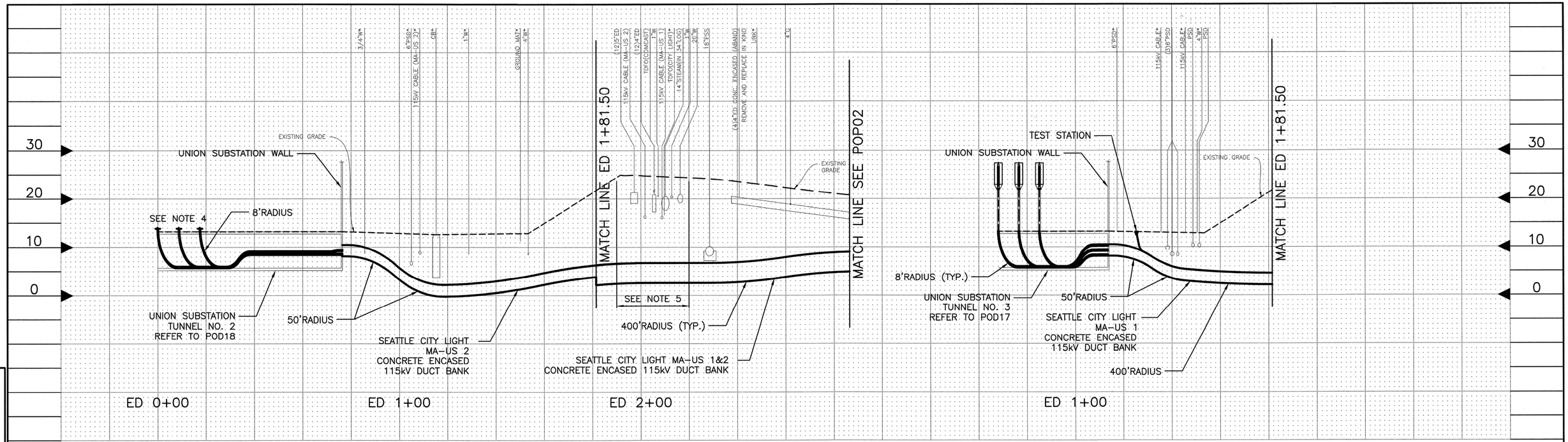

NOTES:

1. ALL EXISTING UTILITIES WITHIN UNION SUBSTATION YARD HAVE NOT BEEN SURVEYED AND ARE APPROXIMATE. LOCATIONS SHOWN PER VARIOUS AS-DESIGNED DRAWINGS, DISCREPANCIES REMAIN.
2. * CROSSING UTILITY SHOWN AT TYPICAL ASSUMED DEPTH.
3. REFER TO POD16 FOR RE-INSULATION OF STEAM CROSSING.
4. STRUCTURE DESIGN PENDING GIS MANUFACTURER.
5. DUCT BANK LOCATION SHALL BE STRICTLY INSTALLED AS SHOWN.
6. 1'-0" MINIMUM SEPARATION SHALL BE MAINTAINED BETWEEN THE DUCT BANK AND THE CROSSING UTILITY.
7. THE UTILITIES SHOWN HEREON ARE BASED ON FIELD SURVEYS, AERIAL PHOTOGRAPHY AND RECORD DOCUMENTS. OTHER FACILITIES MAY EXIST NOT DISCOVERED THROUGH THE RECORD CHECK. THE CONTRACTOR SHALL VERIFY THE EXACT LOCATION, BOTH HORIZONTAL AND VERTICAL, OF ALL UTILITIES THROUGH THE APPROPRIATE UTILITY COMPANIES. CALL BEFORE YOU DIG ~ 1-800-424-5555.
8. CABLE FURNISH AND INSTALL SHALL BE PERFORMED BY OTHERS AND IS FOR INFORMATION ONLY.

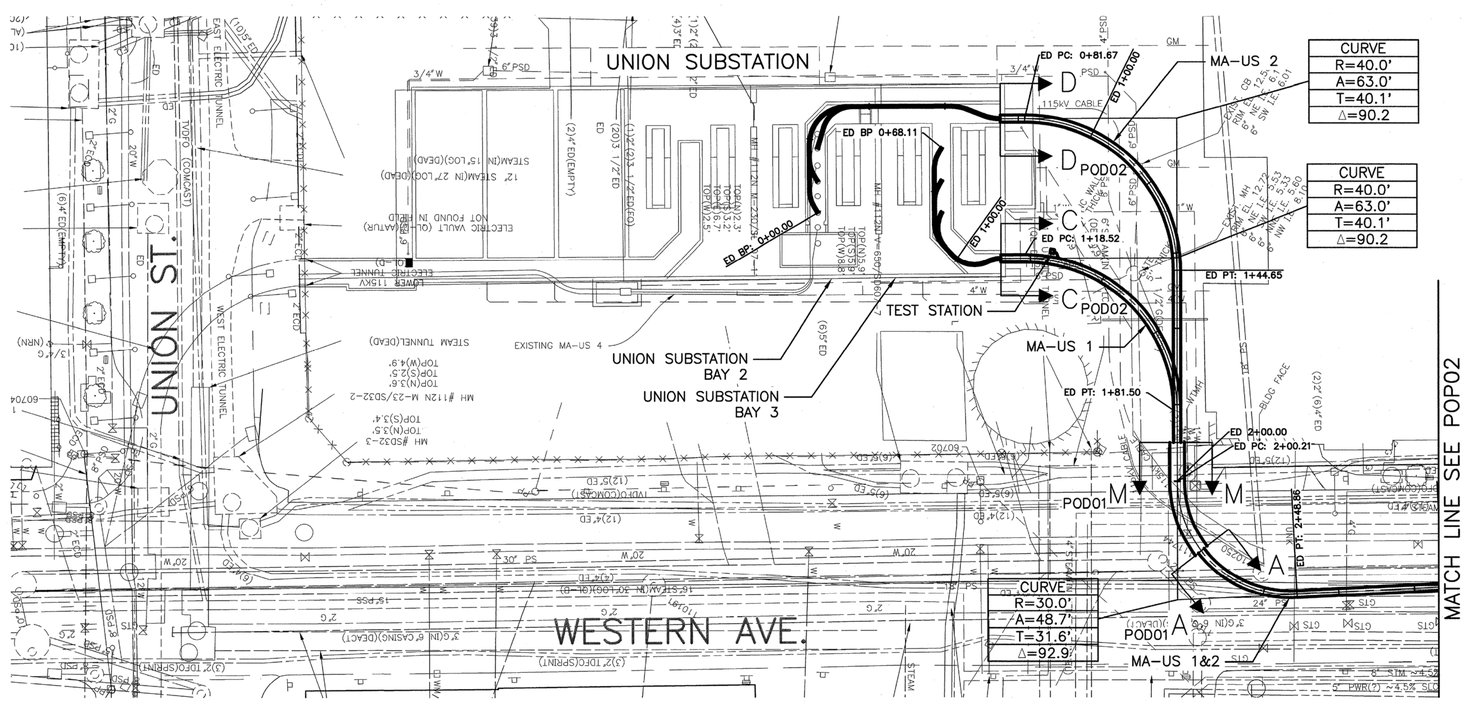

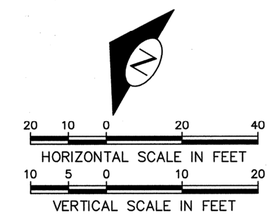

TWO DAYS BEFORE YOU DIG
CALL UULC TOLL FREE
1-800-424-5555

POP01
115kV PLAN AND PROFILE

THIS PLAN IS FOR INFORMATION ONLY. WORK SHOWN ON THIS PLAN IS NOT IN THIS CONTRACT.

POWER ENGINEERS

VAULT SERIAL NO.	DATE	MARK	NATURE REVISIONS	MADE	CHK'D	REV'D

P:\Projects\122724 - Central Waterfront\DD (drawing & design)\DWG (drawings)\03 Line (plans, profiles & details-NFC)\100% Design\POP01.dwg
Jun-24-11 12:22pm

JOB NO. PC / R/W / CO

VAULT PLAN NO.

SHEET 30 OF 68

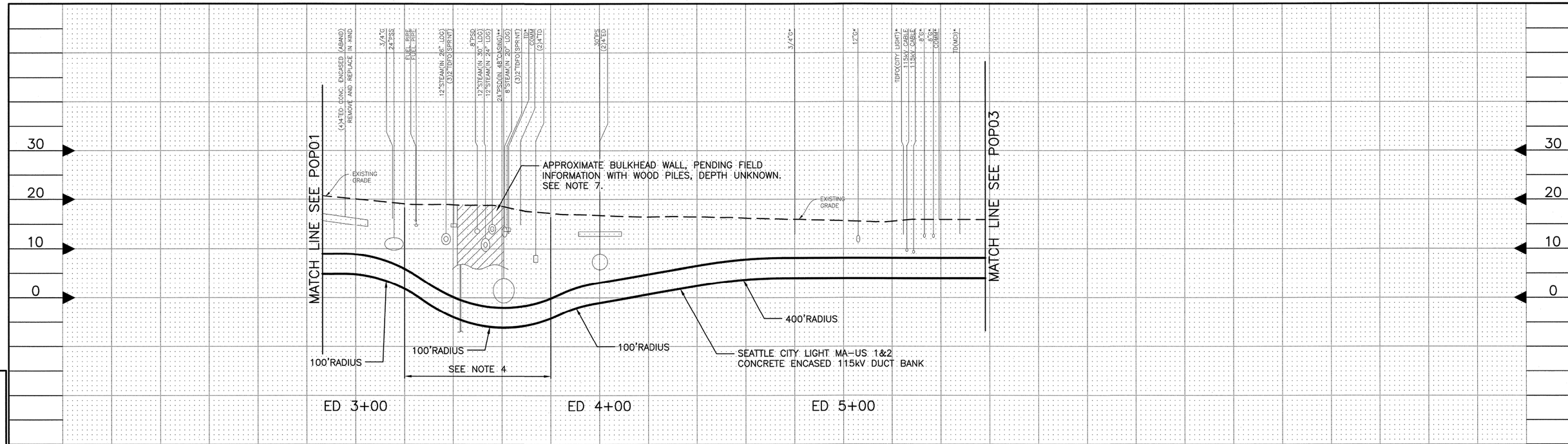

NOTES:

1. * CROSSING UTILITY SHOWN AT TYPICAL ASSUMED DEPTH.
2. ** EXACT LOCATION UNKNOWN. WAITING FOR FIELD VERIFICATION.
3. REFER TO POD16 FOR RE-INSULATION OF STEAM CROSSING.
4. DUCT BANK LOCATION SHALL BE STRICTLY INSTALLED AS SHOWN.
5. 1'-0" MINIMUM SEPARATION SHALL BE MAINTAINED BETWEEN THE DUCT BANK AND THE CROSSING UTILITY.
6. THE UTILITIES SHOWN HEREON ARE BASED ON FIELD SURVEYS, AERIAL PHOTOGRAPHY AND RECORD DOCUMENTS. OTHER FACILITIES MAY EXIST NOT DISCOVERED THROUGH THE RECORD CHECK. THE CONTRACTOR SHALL VERIFY THE EXACT LOCATION, BOTH HORIZONTAL AND VERTICAL, OF ALL UTILITIES THROUGH THE APPROPRIATE UTILITY COMPANIES. CALL BEFORE YOU DIG ~ 1-800-424-5555.
7. REFER TO SPECIAL PROVISIONS APPENDIX FOR STEAM PLANT DRAWINGS FOR ADDITIONAL INFORMATION.

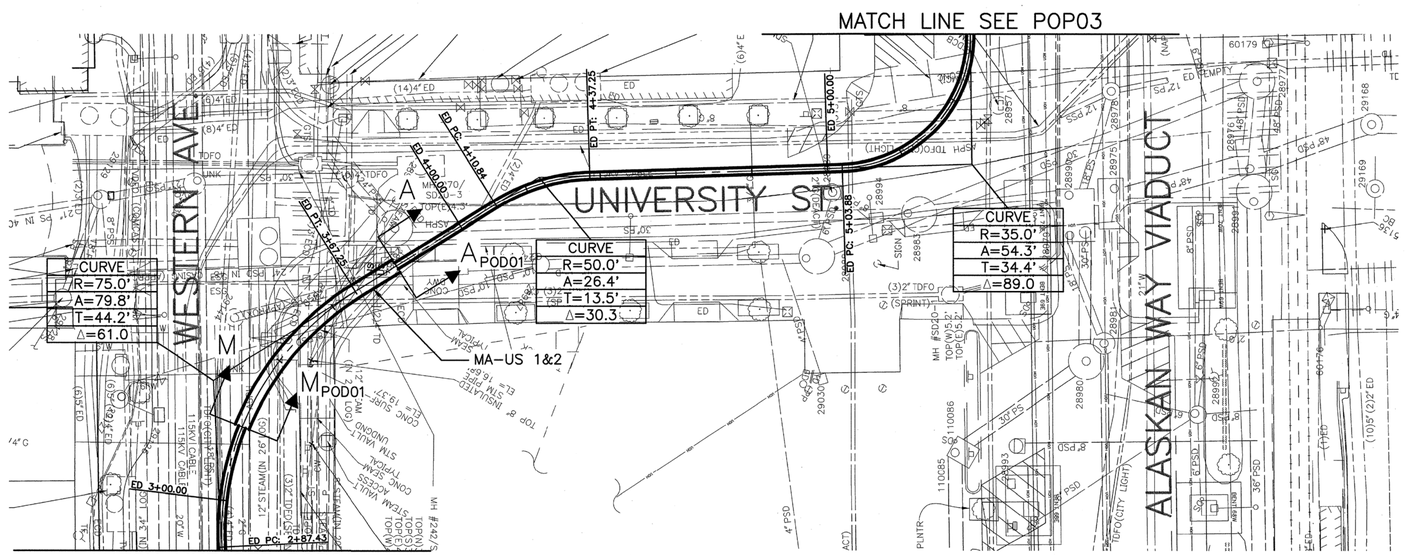

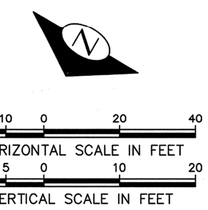

TWO DAYS BEFORE YOU DIG
CALL UULC TOLL FREE
1-800-424-5555

POP02
115kV PLAN AND PROFILE

THIS PLAN IS FOR INFORMATION ONLY. WORK SHOWN ON THIS PLAN IS NOT IN THIS CONTRACT.

POWER ENGINEERS

VAULT SERIAL NO.	DATE	MARK	REVISIONS	MADE	CHK'D	REV'D

P:\Projects\122724 - Central Waterfront\DD (drawing & design)\DWG (drawings)\03 Line (plans, profiles & details-NFC)\100% Design\POP02.dwg
Jun-24-11 12:27pm

JOB NO. PC R/W CO

VAULT PLAN NO.

SHEET 31 OF 68

NOTES:

1. RAILROAD TRACK REMOVAL AND DISPOSAL IS THE RESPONSIBILITY OF THE CIVIL CONTRACTOR.
2. * CROSSING UTILITY SHOWN AT TYPICAL ASSUMED DEPTH.
3. REFER TO POD05, POD06, POD09 AND POD11 FOR VAULT 1 AND 2 INFORMATION.
4. 1'–0" MINIMUM SEPARATION SHALL BE MAINTAINED BETWEEN THE DUCT BANK AND THE CROSSING UTILITY.
5. THE UTILITIES SHOWN HEREON ARE BASED ON FIELD SURVEYS, AERIAL PHOTOGRAPHY AND RECORD DOCUMENTS. OTHER FACILITIES MAY EXIST NOT DISCOVERED THROUGH THE RECORD CHECK. THE CONTRACTOR SHALL VERIFY THE EXACT LOCATION, BOTH HORIZONTAL AND VERTICAL, OF ALL UTILITIES THROUGH THE APPROPRIATE UTILITY COMPANIES. CALL BEFORE YOU DIG ~ 1-800-424-5555.

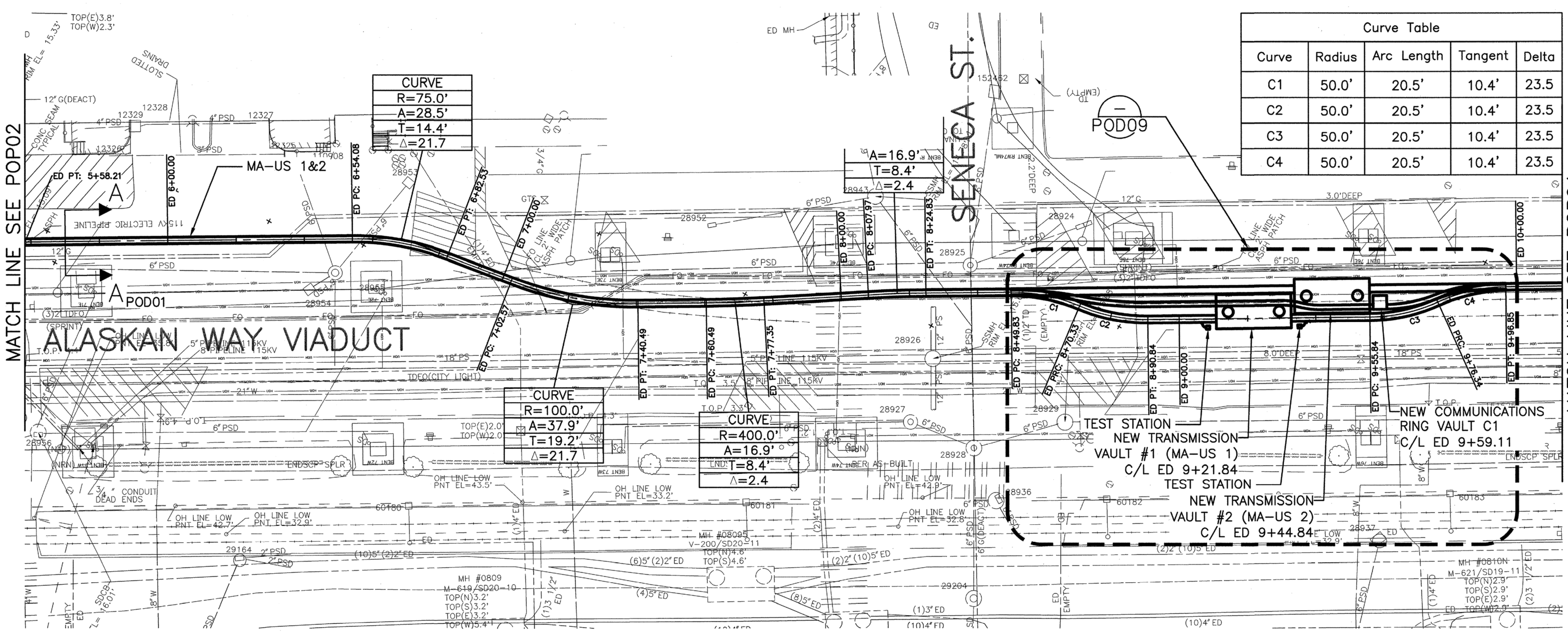

Curve Table				
Curve	Radius	Arc Length	Tangent	Delta
C1	50.0'	20.5'	10.4'	23.5
C2	50.0'	20.5'	10.4'	23.5
C3	50.0'	20.5'	10.4'	23.5
C4	50.0'	20.5'	10.4'	23.5

20 10 0 20 40
HORIZONTAL SCALE IN FEET
10 5 0 10 20
VERTICAL SCALE IN FEET

TWO DAYS BEFORE YOU DIG
CALL UULC TOLL FREE
1-800-424-5555

POP03
115kV PLAN AND PROFILE

THIS PLAN IS FOR INFORMATION ONLY. WORK SHOWN ON THIS PLAN IS NOT IN THIS CONTRACT.

POWER ENGINEERS

MARK	DATE	NATURE	MADE	CHK'D	REV'D

REVISIONS

VAULT SERIAL NO.

JOB NO. PC R/W CO
VAULT PLAN NO.
SHEET 32 OF 68

P:\Projects\122724 – Central Waterfront\DD (drawing & design)\DWG (drawings)\03 Line (plans, profiles & details–NFC)\100% Design\POP03.dwg
Jun–24–11 12:32pm

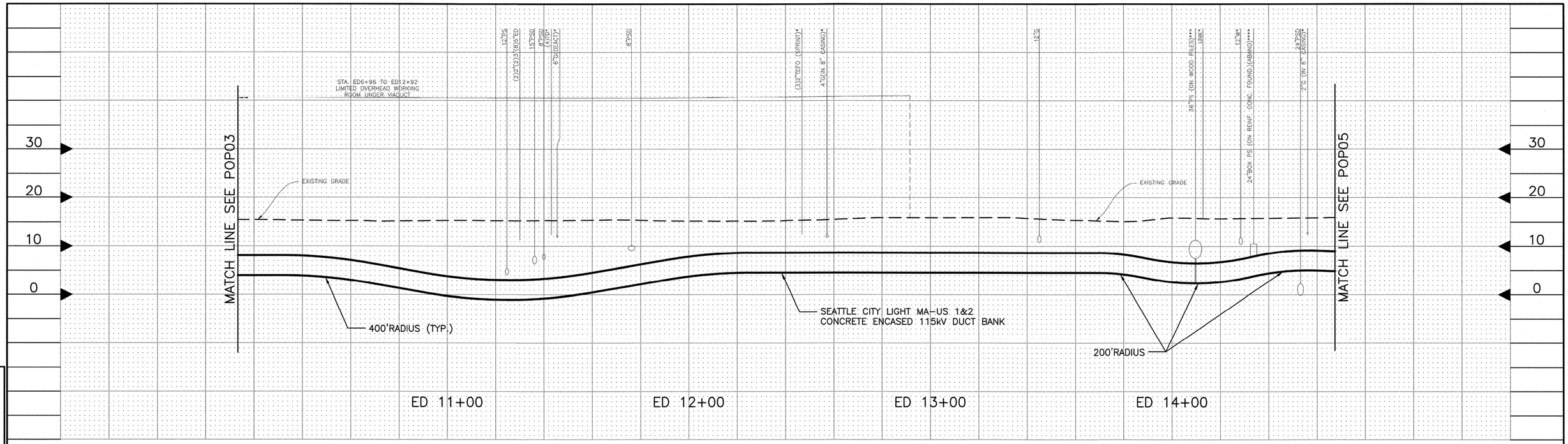

NOTES:

1. RAILROAD TRACK REMOVAL AND DISPOSAL IS THE RESPONSIBILITY OF THE CIVIL CONTRACTOR.
2. * CROSSING UTILITY SHOWN AT TYPICAL ASSUMED DEPTH.
3. *** DEPTH OF WOOD PILES UNKNOWN.
4. **** HORIZONTAL LOCATION AND DEPTH UNKNOWN PENDING FIELD SURVEY.
5. 1'–0" MINIMUM SEPARATION SHALL BE MAINTAINED BETWEEN THE DUCT BANK AND THE CROSSING UTILITY.
6. THE UTILITIES SHOWN HEREON ARE BASED ON FIELD SURVEYS, AERIAL PHOTOGRAPHY AND RECORD DOCUMENTS. OTHER FACILITIES MAY EXIST NOT DISCOVERED THROUGH THE RECORD CHECK. THE CONTRACTOR SHALL VERIFY THE EXACT LOCATION, BOTH HORIZONTAL AND VERTICAL, OF ALL UTILITIES THROUGH THE APPROPRIATE UTILITY COMPANIES. CALL BEFORE YOU DIG ~ 1–800–424–5555.

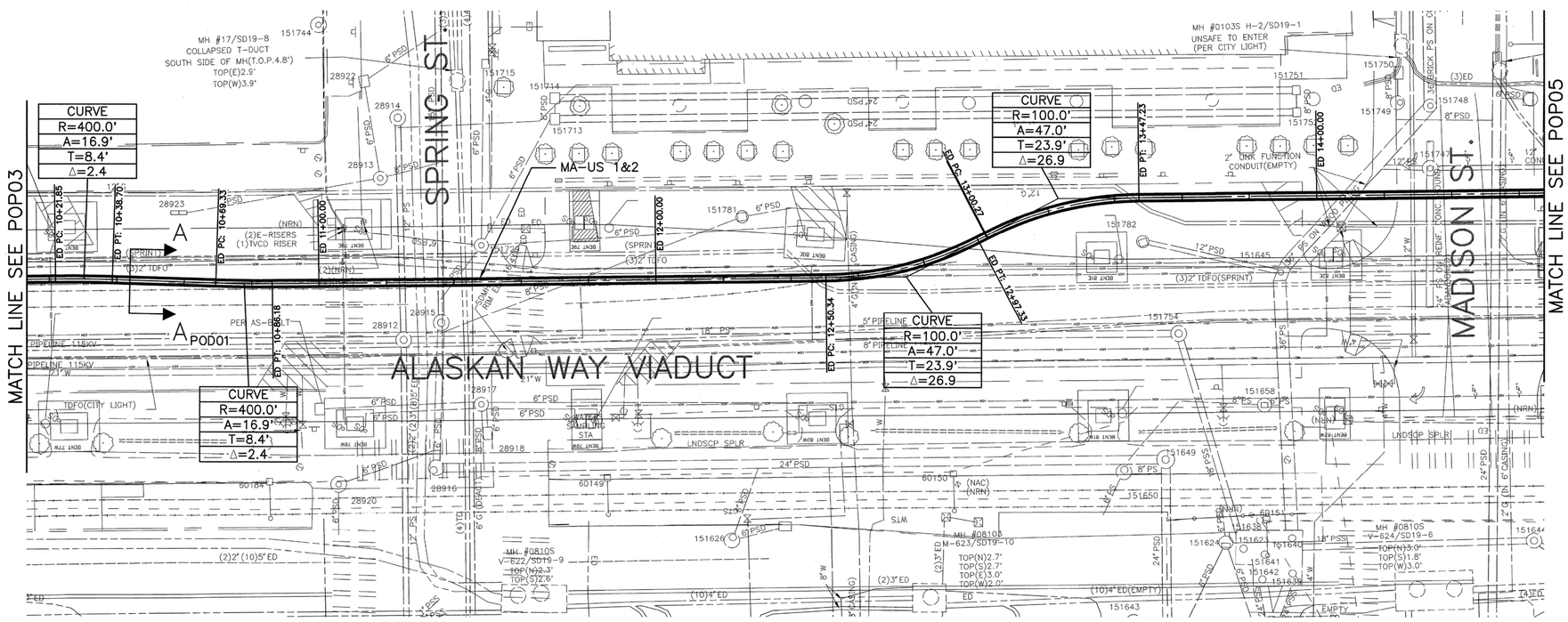

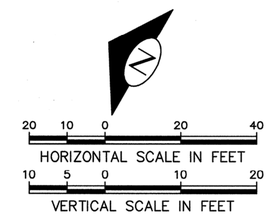

TWO DAYS BEFORE YOU DIG
CALL UULC TOLL FREE
1–800–424–5555

POP04
115kV PLAN AND PROFILE

THIS PLAN IS FOR INFORMATION ONLY. WORK SHOWN ON THIS PLAN IS NOT IN THIS CONTRACT.

POWER ENGINEERS

JOB NO.	PC R/W CO
VAULT PLAN NO.	
SHEET 33 OF 68	

VAULT SERIAL NO.	DATE	MARK	NATURE REVISIONS	MADE	CHK'D	REV'D

P:\Projects\122724 – Central Waterfront\DD (drawing & design)\DWG (drawings)\03 Line (plans, profiles & details–NFC)\100% Design\POP04.dwg
Jun–24–11 12:39pm

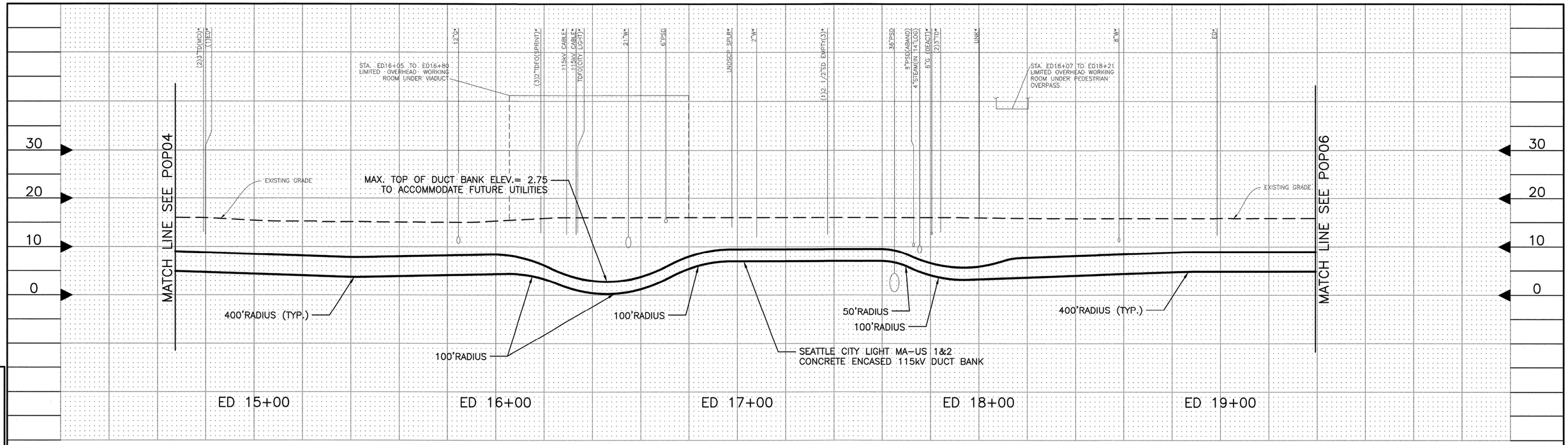

NOTES:

1. * CROSSING UTILITY SHOWN AT TYPICAL ASSUMED DEPTH.
2. REFER TO POD16 FOR RE-INSULATION OF STEAM CROSSING.
3. 1'-0" MINIMUM SEPARATION SHALL BE MAINTAINED BETWEEN THE DUCT BANK AND THE CROSSING UTILITY.
4. THE UTILITIES SHOWN HEREON ARE BASED ON FIELD SURVEYS, AERIAL PHOTOGRAPHY AND RECORD DOCUMENTS. OTHER FACILITIES MAY EXIST NOT DISCOVERED THROUGH THE RECORD CHECK. THE CONTRACTOR SHALL VERIFY THE EXACT LOCATION, BOTH HORIZONTAL AND VERTICAL, OF ALL UTILITIES THROUGH THE APPROPRIATE UTILITY COMPANIES. CALL BEFORE YOU DIG ~ 1-800-424-5555.

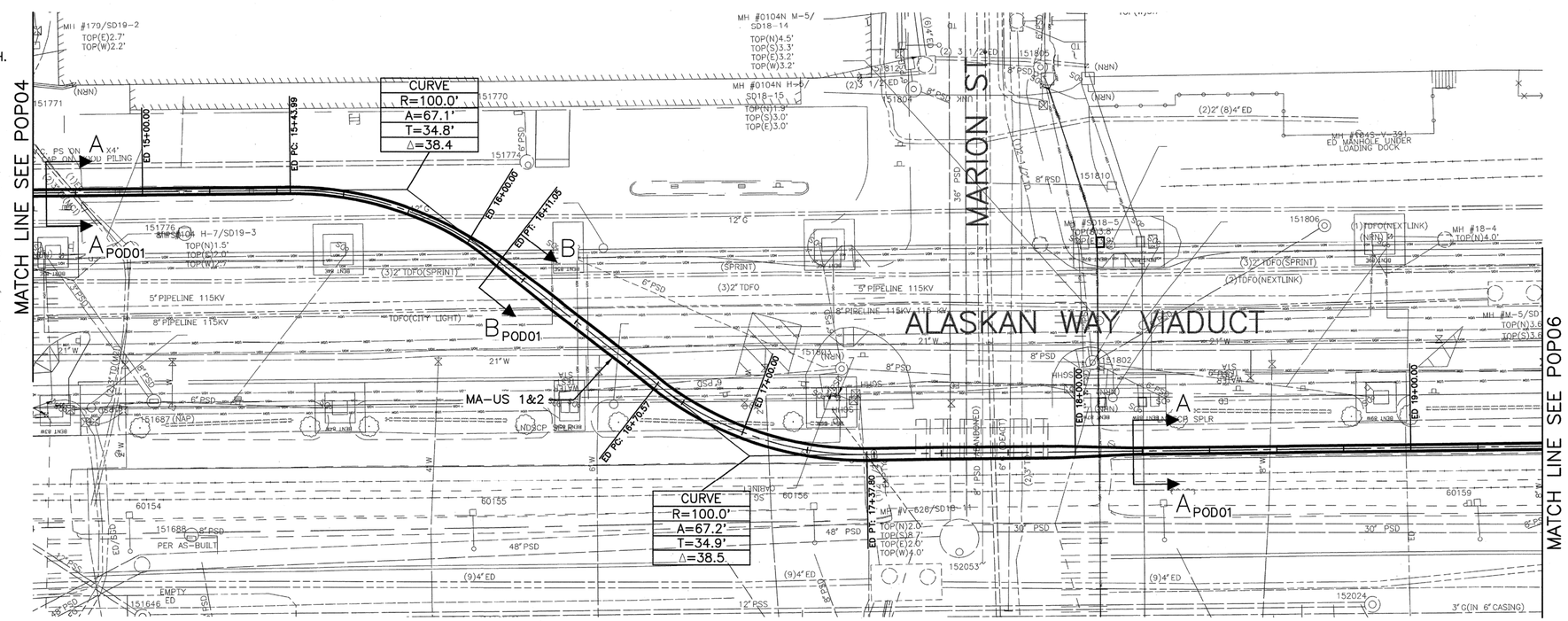

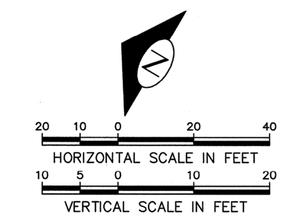

TWO DAYS BEFORE YOU DIG
CALL UULC TOLL FREE
1-800-424-5555

POP05
115kV PLAN AND PROFILE

THIS PLAN IS FOR INFORMATION ONLY. WORK SHOWN ON THIS PLAN IS NOT IN THIS CONTRACT.

POWER ENGINEERS

MARK	DATE	NATURE REVISIONS	MADE	CHK'D	REV'D

VAULT SERIAL NO.

P:\Projects\122724 - Central Waterfront\DD (drawing & design)\DWG (drawings)\03 Line (plans, profiles & details-NFC)\100% Design\POP05.dwg
Jun-24-11 12:44pm

JOB NO. PC R/W CO

VAULT PLAN NO.

SHEET 34 OF 68

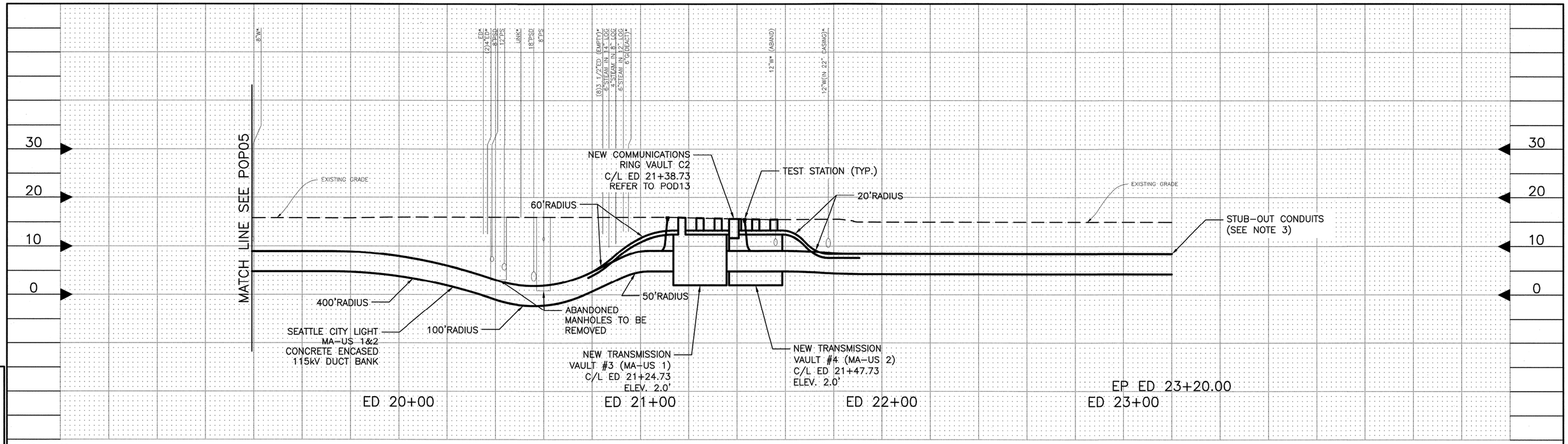

NOTES:

1. RAILROAD TRACK REMOVAL AND DISPOSAL IS THE RESPONSIBILITY OF THE CIVIL CONTRACTOR.
2. * CROSSING UTILITY SHOWN AT TYPICAL ASSUMED DEPTH.
3. STUB-OUT CONDUITS LEAVING 10" EXTRA CONDUIT PAST THE END OF CONCRETE SEALED WITH GLUE PLUGS.
4. FOR ADDITIONAL PROFILE INFORMATION REFER TO POR06.
5. REFER TO POD07, POD08, POD10 AND POD12 FOR VAULT 3 AND 4 INFORMATION.
6. 1'-0" MINIMUM SEPARATION SHALL BE MAINTAINED BETWEEN THE DUCT BANK AND THE CROSSING UTILITY.
7. THE UTILITIES SHOWN HEREON ARE BASED ON FIELD SURVEYS, AERIAL PHOTOGRAPHY AND RECORD DOCUMENTS. OTHER FACILITIES MAY EXIST NOT DISCOVERED THROUGH THE RECORD CHECK. THE CONTRACTOR SHALL VERIFY THE EXACT LOCATION, BOTH HORIZONTAL AND VERTICAL, OF ALL UTILITIES THROUGH THE APPROPRIATE UTILITY COMPANIES. CALL BEFORE YOU DIG ~ 1-800-424-5555.

Curve Table

Curve	Radius	Arc Length	Tangent	Delta
C5	50.0'	12.8'	6.4'	14.7
C6	50.0'	12.5'	6.3'	14.4
C7	50.0'	12.0'	6.0'	13.8
C8	50.0'	12.5'	6.3'	14.3
C9	50.0'	12.2'	6.2'	14.0

Curve Table

Curve	Radius	Arc Length	Tangent	Delta
C10	50.0'	12.5'	6.3'	14.3
C11	50.0'	11.2'	5.6'	12.8
C12	50.0'	10.7'	5.4'	12.2
C13	50.0'	18.0'	9.1'	20.6

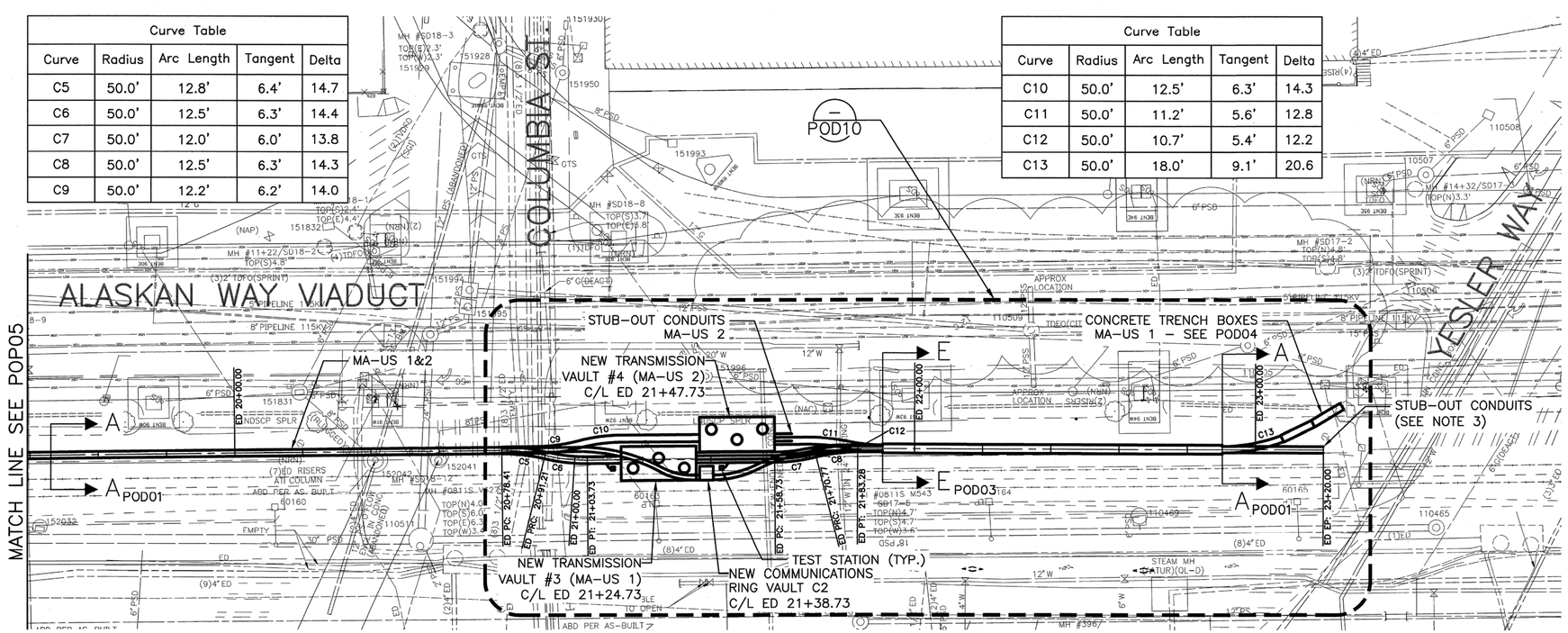

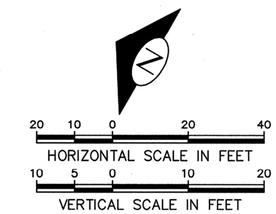

TWO DAYS BEFORE YOU DIG CALL UULC TOLL FREE 1-800-424-5555

POP06
115kV PLAN AND PROFILE

THIS PLAN IS FOR INFORMATION ONLY. WORK SHOWN ON THIS PLAN IS NOT IN THIS CONTRACT.

POWER ENGINEERS

JOB NO. PC R/W CO

VAULT PLAN NO.

SHEET 35 OF 68

VAULT SERIAL NO.	MARK	DATE	NATURE REVISIONS	MADE	CHK'D	REV'D

P:\Projects\122724 - Central Waterfront\DD (drawing & design)\DWG (drawings)\03 Line (plans, profiles & details-NFC)\100% Design\POP06.dwg
Jun-24-11 12:48pm

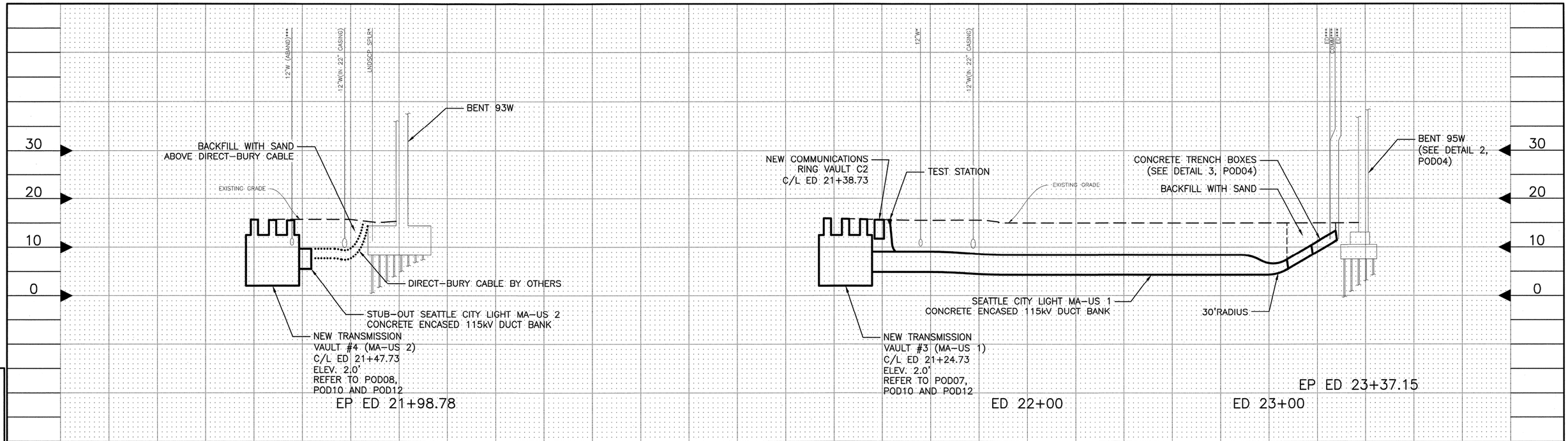

NOTES:

1. * CROSSING UTILITY SHOWN AT TYPICAL ASSUMED DEPTH.
2. *** UTILITIES TO BE RELOCATED PRIOR TO CONSTRUCTION.
3. FOR PLAN AND ADDITIONAL PROFILE INFORMATION REFER TO POP06 AND POD10.
4. 1'-0" MINIMUM SEPARATION SHALL BE MAINTAINED BETWEEN THE DUCT BANK AND THE CROSSING UTILITY.
5. THE UTILITIES SHOWN HEREON ARE BASED ON FIELD SURVEYS, AERIAL PHOTOGRAPHY AND RECORD DOCUMENTS. OTHER FACILITIES MAY EXIST NOT DISCOVERED THROUGH THE RECORD CHECK. THE CONTRACTOR SHALL VERIFY THE EXACT LOCATION, BOTH HORIZONTAL AND VERTICAL, OF ALL UTILITIES THROUGH THE APPROPRIATE UTILITY COMPANIES. CALL BEFORE YOU DIG ~ 1-800-424-5555.

20 10 0 20 40
HORIZONTAL SCALE IN FEET
10 5 0 10 20
VERTICAL SCALE IN FEET

TWO DAYS BEFORE YOU DIG
CALL UULC TOLL FREE
1-800-424-5555

POR06
115kV PROFILE

VAULT SERIAL NO.	DATE	MARK	NATURE REVISIONS	MADE	CHK'D	REV'D

P:\Projects\122724 - Central Waterfront\DD (drawing & design)\DWG (drawings)\03 Line (plans, profiles & details-NFC)\100% Design\POR06.dwg
Jun-24-11 11:34am

POWER ENGINEERS

THIS PLAN IS FOR INFORMATION ONLY. WORK SHOWN ON THIS PLAN IS NOT IN THIS CONTRACT.

JOB NO. PC R/W CO

VAULT PLAN NO.

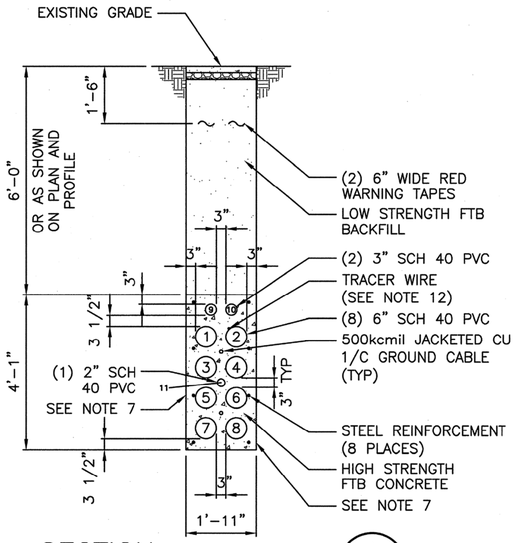

SECTION A

SCALE 1"=2'
MA-US 1 & 2

POP01,POP02,POP03, POP04,POP05,POP06, POD09,POD10

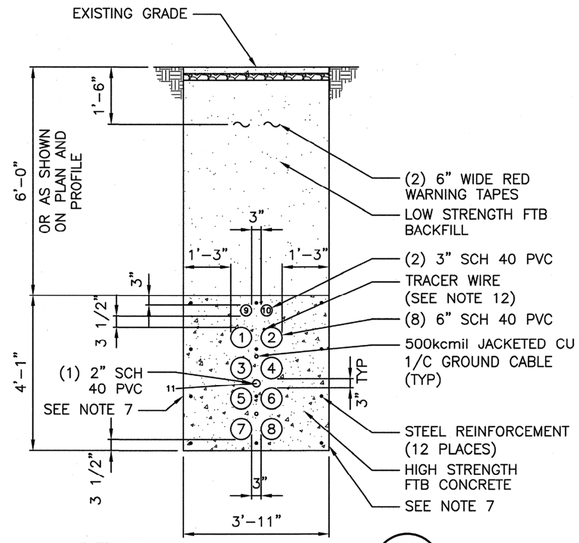

SECTION M

SCALE 1"=2'
MA-US 1 & 2

POP01,POP02

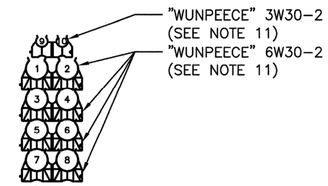

4 x 2 TYPICAL DUCT SPACER ARRANGEMENT

SCALE 1"=2'

NOTES:

1. REFER TO SPECIAL PROVISIONS – ELECTRICAL DUCT BANKS FOR CONSTRUCTION GUIDELINES.
2. STAGGER BELL ENDS.
3. ANCHOR DUCT SPACERS WITH #14 AWG STEEL TIE WIRE AND #4 REINFORCING BARS.
4. AVOID STANDING ON CONDUIT.
5. DIMENSIONAL ROUNDING – ALL FRACTIONAL INCHES FOR OUTSIDE DUCT BANK OR MAX PAY LIMIT DIMENSIONS SHALL BE ROUNDED UP TO THE NEAREST INCH.
6. REINFORCING HOOPS NOT SHOWN FOR CLARITY.
7. ALL NEEDED CONCRETE FORMS BY CONTRACTOR.
8. ALL PHASING SHOWN AS LOOKING AHEAD STATIONING.
9. REINFORCING STEEL SHALL NOT BE ALLOWED TO SURROUND AN INDIVIDUAL CONDUIT.
10. BELL ENDS SHALL BE INSTALLED ALL IN THE SAME DIRECTION BETWEEN MANHOLES.
11. ALL DUCT SPACERS ARE UNDERGROUND DEVICES "WUNPEECE" SPACERS OR APPROVED EQUIVALENT.
12. TRACER WIRE SHALL BE RHW #10 AWG. TRACER WIRE SHALL BE SECURED TO DUCT WITH PLASTIC ZIP TIE.

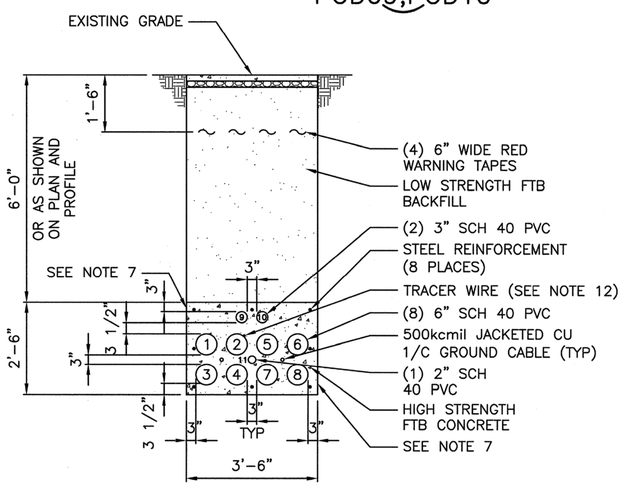

SECTION B

SCALE 1"=2'
MA-US 1 & 2

POP05

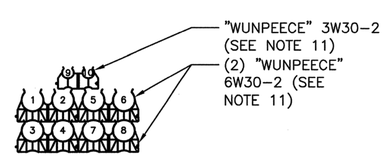

2 x 4 TYPICAL DUCT SPACER ARRANGEMENT

SCALE 1"=2'

POD01
TYPICAL SECTION VIEW DETAILS

THIS PLAN IS FOR INFORMATION ONLY. WORK SHOWN ON THIS PLAN IS NOT IN THIS CONTRACT.

POWER ENGINEERS

JOB NO. PC R/W CO
VAULT PLAN NO.
SHEET 37 OF 68

VAULT SERIAL NO.	DATE	MARK	NATURE REVISIONS	MADE	CHK'D	REV'D

P:\Projects\122724 – Central Waterfront\DD (drawing & design)\DWG (drawings)\03 Line (plans, profiles & details-NFC)\100% Design\100% Details_Duct Bank.dwg
Jun-24-11 10:04am

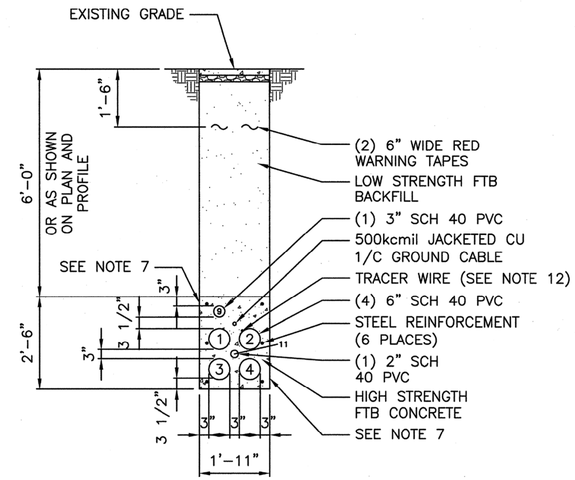

SECTION C POD01

SCALE 1"=2'
MA-US-1

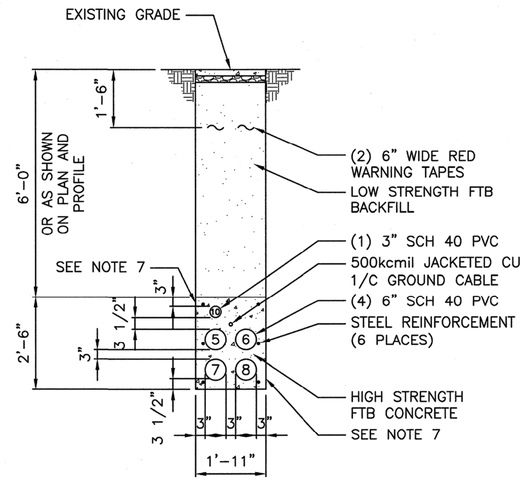

SECTION D POD01

SCALE 1"=2'
MA-US-2

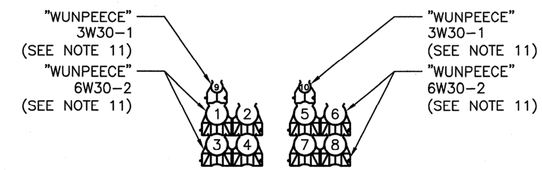

2 x 2 TYPICAL DUCT SPACER ARRANGEMENT

SCALE 1"=2'

NOTES:

1. REFER TO SPECIAL PROVISIONS – ELECTRICAL DUCT BANKS FOR CONSTRUCTION GUIDELINES.
2. STAGGER BELL ENDS.
3. ANCHOR DUCT SPACERS WITH #14 AWG STEEL TIE WIRE AND #4 REINFORCING BARS.
4. AVOID STANDING ON CONDUIT.
5. DIMENSIONAL ROUNDING – ALL FRACTIONAL INCHES FOR OUTSIDE DUCT BANK OR MAX PAY LIMIT DIMENSIONS SHALL BE ROUNDED UP TO THE NEAREST INCH.
6. REINFORCING HOOPS NOT SHOWN FOR CLARITY.
7. ALL NEEDED CONCRETE FORMS BY CONTRACTOR.
8. ALL PHASING SHOWN AS LOOKING AHEAD STATIONING.
9. REINFORCING STEEL SHALL NOT BE ALLOWED TO SURROUND AN INDIVIDUAL CONDUIT.
10. BELL ENDS SHALL BE INSTALLED ALL IN THE SAME DIRECTION BETWEEN MANHOLES.
11. ALL DUCT SPACERS ARE UNDERGROUND DEVICES "WUNPEECE" SPACERS OR APPROVED EQUIVALENT.
12. TRACER WIRE SHALL BE RHW #10 AWG. TRACER WIRE SHALL BE SECURED TO DUCT WITH PLASTIC ZIP TIE.

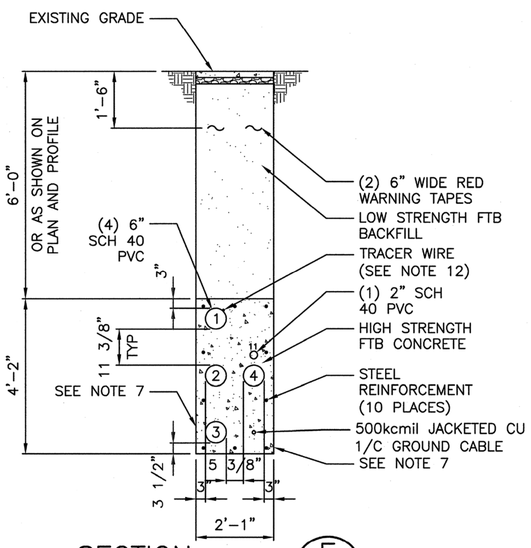

SECTION F POD09,POD10

SCALE 1"=2'
MA-US-1

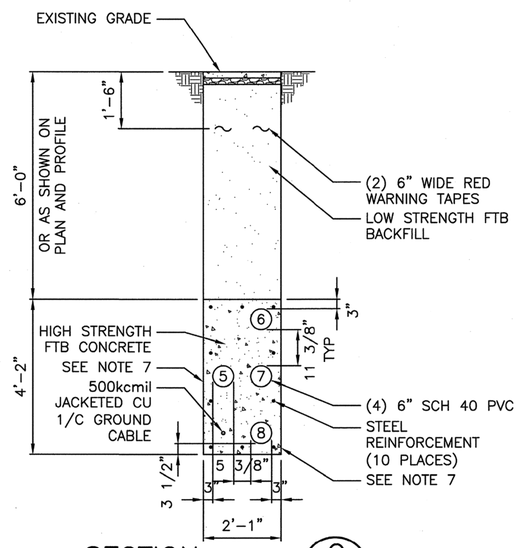

SECTION G POD09,POD10

SCALE 1"=2'
MA-US-2

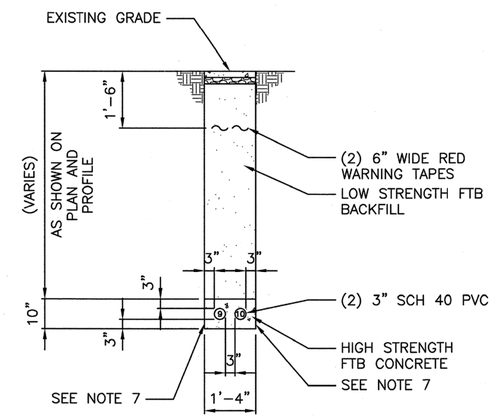

SECTION L POD09,POD10

SCALE 1"=2'
COMMUNICATIONS CONDUIT

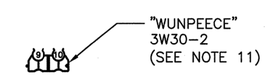

1 x 2 TYPICAL DUCT SPACER ARRANGEMENT

SCALE 1"=2'

POD02
TYPICAL SECTION VIEW DETAILS

THIS PLAN IS FOR INFORMATION ONLY. WORK SHOWN ON THIS PLAN IS NOT IN THIS CONTRACT.

POWER ENGINEERS

VAULT SERIAL NO.	DATE	MARK	NATURE REVISIONS	MADE	CHK'D	REV'D

P:\Projects\122724 - Central Waterfront\DD (drawing & design)\DWG (drawings)\03 Line (plans, profiles & details-NFC)\100% Design\100% Depilla_Duct Bank.dwg
Jun-24-11 10:42am

JOB NO.	PC R/W CO
VAULT PLAN NO.	
SHEET 38 OF 68	

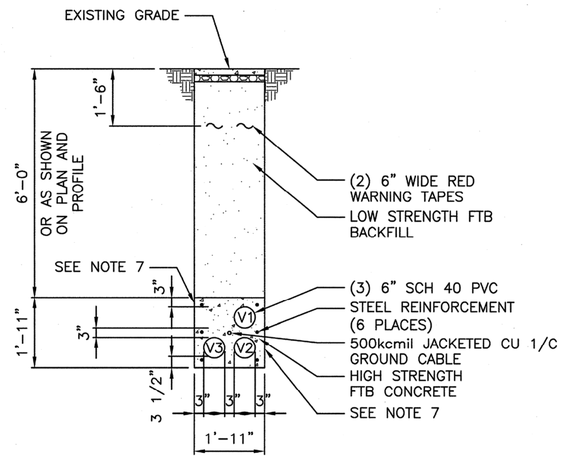

SECTION H POD10
SCALE 1"=2'
STUB OUT TO VIADUCT MA-US-1

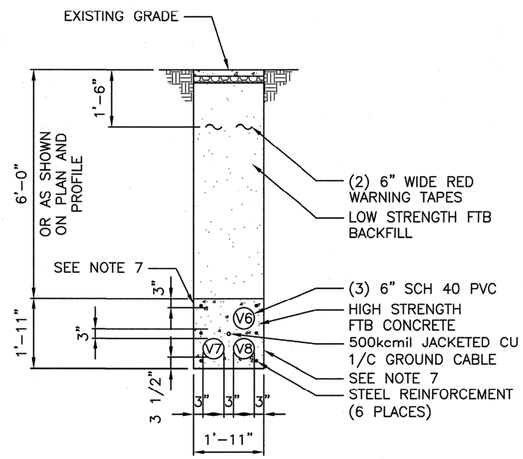

SECTION I POD10
SCALE 1"=2'
STUB OUT TO VIADUCT MA-US-2

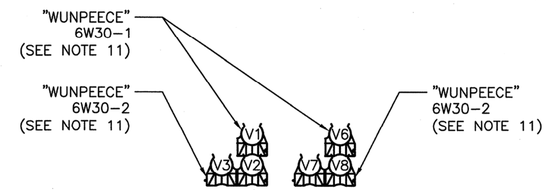

2 x 2 TYPICAL DUCT SPACER ARRANGEMENT
SCALE 1'=2"

NOTES:

1. REFER TO SPECIAL PROVISIONS – ELECTRICAL DUCT BANKS FOR CONSTRUCTION GUIDELINES.
2. STAGGER BELL ENDS.
3. ANCHOR DUCT SPACERS WITH #14 AWG STEEL TIE WIRE AND #4 REINFORCING BARS.
4. AVOID STANDING ON CONDUIT.
5. DIMENSIONAL ROUNDING – ALL FRACTIONAL INCHES FOR OUTSIDE DUCT BANK OR MAX PAY LIMIT DIMENSIONS SHALL BE ROUNDED UP TO THE NEAREST INCH.
6. REINFORCING HOOPS NOT SHOWN FOR CLARITY.
7. ALL NEEDED CONCRETE FORMS BY CONTRACTOR.
8. ALL PHASING SHOWN AS LOOKING AHEAD STATIONING.
9. REINFORCING STEEL SHALL NOT BE ALLOWED TO SURROUND AN INDIVIDUAL CONDUIT.
10. BELL ENDS SHALL BE INSTALLED ALL IN THE SAME DIRECTION BETWEEN MANHOLES.
11. ALL DUCT SPACERS ARE UNDERGROUND DEVICES "WUNPEECE" SPACERS OR APPROVED EQUIVALENT.
12. TRACER WIRE SHALL BE RHW #10 AWG. TRACER WIRE SHALL BE SECURED TO DUCT WITH PLASTIC ZIP TIE.

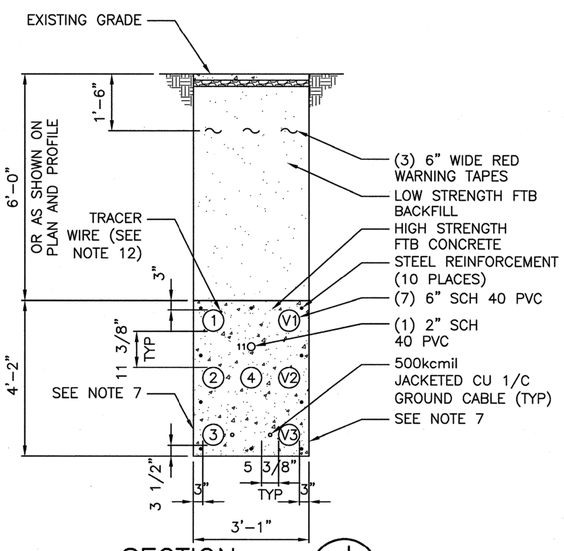

SECTION J POD10
SCALE 1"=2'
MA-US-1

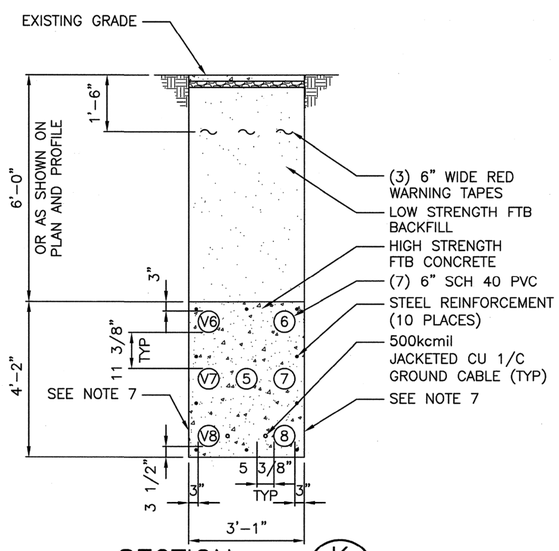

SECTION K POD10
SCALE 1"=2'
MA-US-2

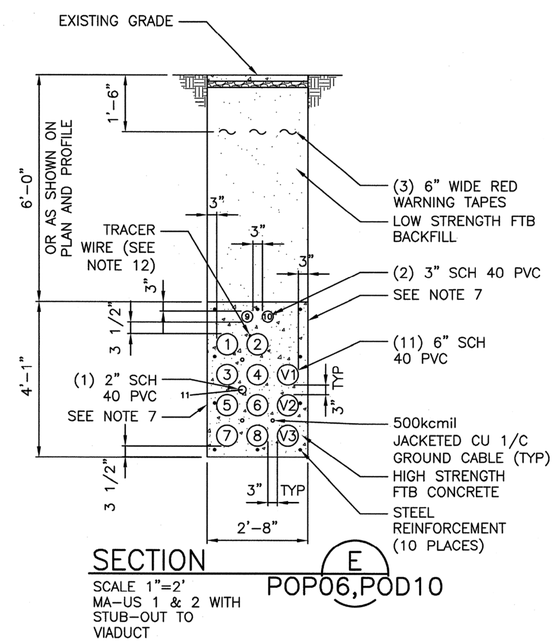

SECTION E POP06,POD10
SCALE 1"=2'
MA-US 1 & 2 WITH STUB-OUT TO VIADUCT

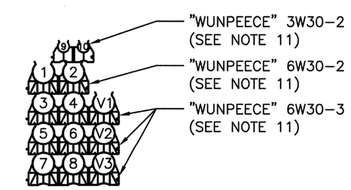

4 x 3 TYPICAL DUCT SPACER ARRANGEMENT
SCALE 1"=2'

POD03
TYPICAL SECTION VIEW DETAILS

THIS PLAN IS FOR INFORMATION ONLY. WORK SHOWN ON THIS PLAN IS NOT IN THIS CONTRACT.

POWER ENGINEERS

VAULT SERIAL NO.	DATE	MARK	NATURE REVISIONS	MADE	CHK'D	REV'D

P:\Projects\122724 – Central Waterfront\DD (drawing & design)\DWG (drawings)\03 Line (plans, profiles & details-NFG)\100% Design\005 Details_Duct Bank.dwg
Jun-24-11 10:46am

JOB NO. PC R/W CO
VAULT PLAN NO.
SHEET 39 OF 68

NOTES:

1. REFER TO POD10 FOR DUCT BANK INSTALLATION CONNECTING TO TRENCH BOXES.
2. CABLE FURNISH AND INSTALL SHALL BE PERFORMED BY OTHERS AND IS FOR INFORMATION ONLY.

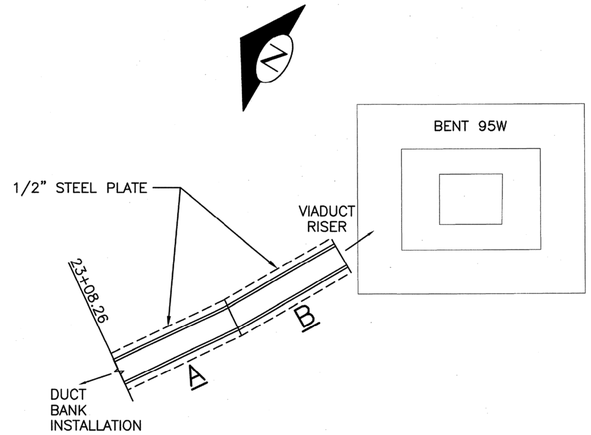

DETAIL 1 POP06,POD10
CABLE TRENCH PLAN VIEW TO BENT 95W
SCALE 1"=6'

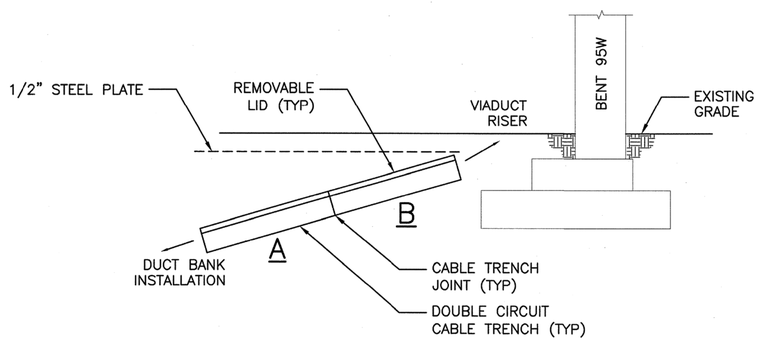

DETAIL 2 POR06
CABLE TRENCH PROFILE VIEW TO BENT 95W
SCALE 1"=6'

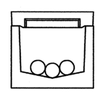

CABLE IN TRENCH BOX
END VIEW
SCALE 1"=2'

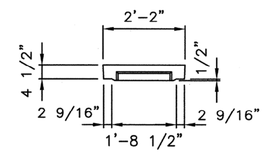

REMOVABLE LID
END VIEW
SCALE 1"=2'

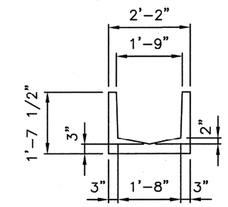

TRENCH BOX
END VIEW
SCALE 1"=2'

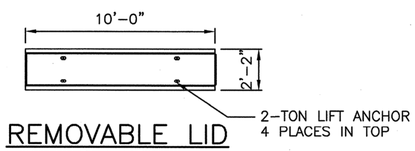

REMOVABLE LID
PLAN VIEW
SCALE 1"=4'

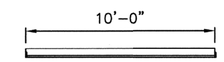

REMOVABLE LID
SIDE VIEW
SCALE 1"=4'

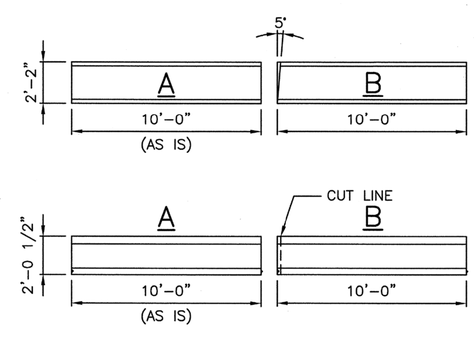

HORIZONTAL

VERTICAL

DETAIL 3 POR06
CABLE TRENCH CUT ANGLES
SCALE 1"=4'

POD04
TRENCH BOX DETAILS

THIS PLAN IS FOR INFORMATION ONLY. WORK SHOWN ON THIS PLAN IS NOT IN THIS CONTRACT.

POWER ENGINEERS

JOB NO.	PC R/W CO
VAULT PLAN NO.	
SHEET 40 OF 68	

VAULT SERIAL NO.	DATE	MARK	NATURE REVISIONS	MADE	CHK'D	REV'D

P:\Projects\22724 - Central Waterfront\DD (drawing & design)\DWG (drawings)\03 Line (plans, profiles & details-NFC)\100% Design\100% Depile_Duct Bank.dwg
Jun-24-11 10:07am

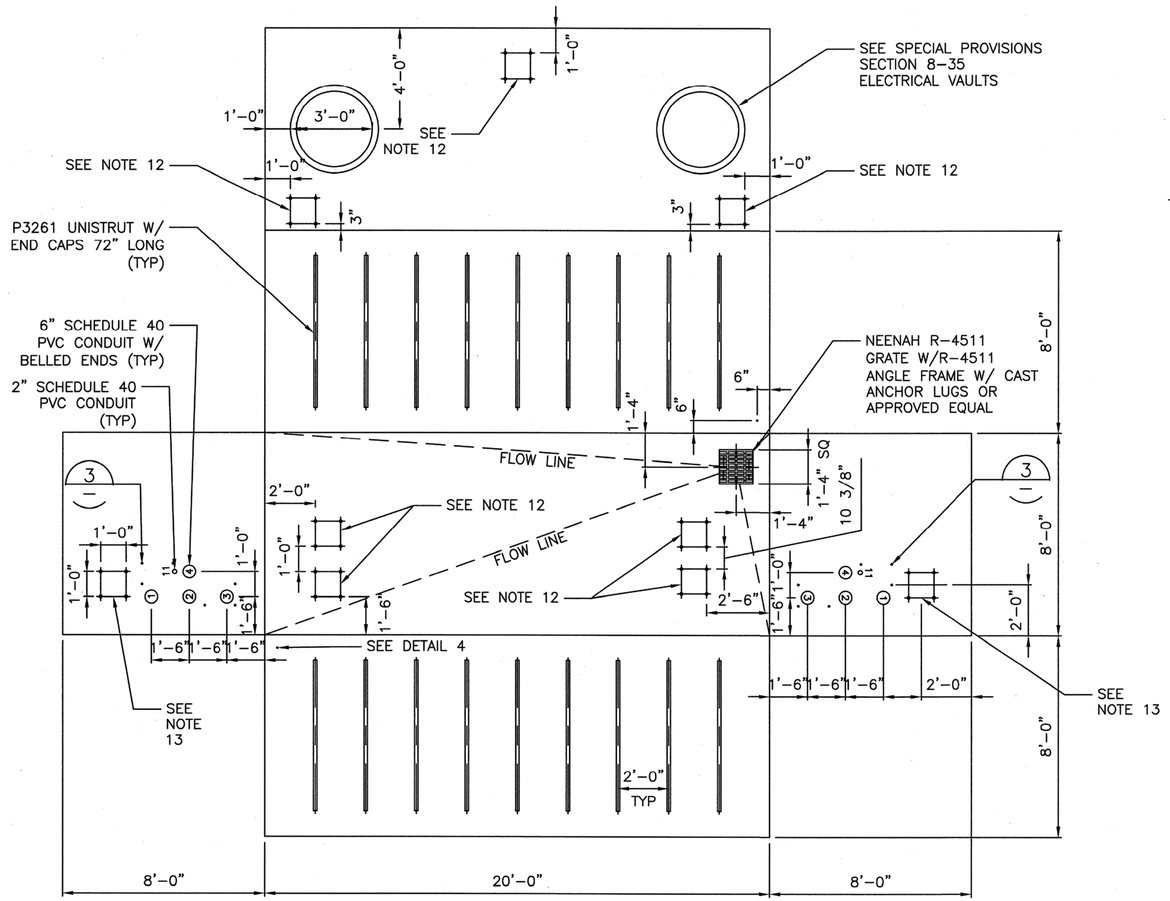

TRANSMISSION PRECAST VAULT 1 MA–US–1 DEVELOPMENT PLAN

SCALE 1"=3'

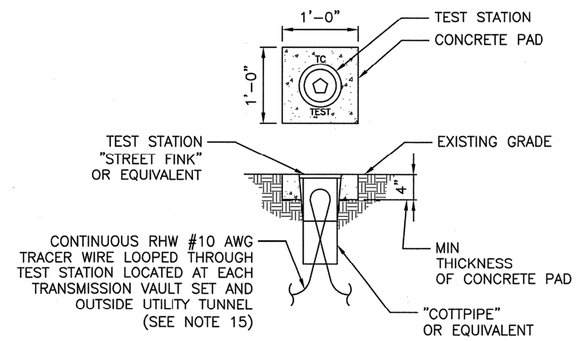

DETAIL 1

SCALE 1"=1'
TRANSMISSION PRECAST VAULT TEST STATION

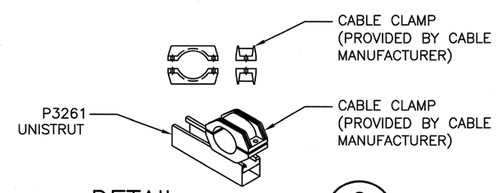

DETAIL 2

SCALE 1"=1'
TRANSMISSION PRECAST VAULT CABLE CLAMP

NOTES:

1. SEE SPECIAL PROVISIONS SECTION 8–35 ELECTRICAL VAULTS FOR CONSTRUCTION GUIDELINES.
2. ALL DIMENSIONS ARE INSIDE DIMENSIONS.
3. ALL UNISTRUT TO BE SECURED TO VAULT'S REINFORCING STEEL.
4. SUMP SHALL BE CAPABLE OF HANDLING SUMP PUMP, MINIMUM 4" DEEP.
5. CONDUITS MUST ALWAYS BE INSTALLED IN THE SAME DIRECTION.
6. CABLE & ACCESSORIES CONTRACTOR TO FIELD VERIFY ACTUAL VAULT DEPTHS. CONTRACTOR IS RESPONSIBLE FOR ALL SAFETY & ENTRY/EXIT REQUIREMENTS.
7. ALL CHIMNEY RINGS SHALL BE MORTARED OR OTHERWISE "KEYED" TO PREVENT HORIZONTAL DISPLACEMENT AND SHALL BE SECURELY MORTARED TO VAULT ROOF.
8. VAULT RING SHALL BE SECURELY FASTENED TO THE VAULT ROOF OR CHIMNEY USING INSERTS AND BOLTS OR OTHER MEANS WITH PRIOR APPROVAL.
9. REINFORCING STEEL SHALL BE BONDED TO 500kcmil SOFT DRAWN BARE COPPER BONDING JUMPERS.
10. MULTISECTION PRECAST VAULTS SHALL INCORPORATE EITHER SHIPLAP OR TONGUE AND GROOVE JOINTS UTILIZING APPROPRIATE SILICONE, POLYMERIC OR ELASTOMERIC SEALANTS.
11. IF MULTISECTION PRECAST VAULT IS USED, PROVIDE MINIMUM 3" EDGE CLEARANCE ON UNISTRUT FROM JOINTS.
12. PULLING HARDWARE USING A MINIMUM OF FOUR INDIVIDUAL ANCHORS AND WALLS SHALL BE GOOD FOR 20,000lbs MINIMUM WORKING TENSION PER LOCATION.
13. PULLING HARDWARE USING A MINIMUM OF FOUR INDIVIDUAL ANCHORS AND WALLS SHALL BE GOOD FOR 10,000lbs MINIMUM WORKING TENSION PER LOCATION.
14. STEEL DOWELING SHALL PENETRATE VAULT WALL A MINIMUM OF 3". STEEL SHALL OVERLAP 1'–6" AND BE TIED TOGETHER. SEE TRENCH DETAIL POD02 FOR STEEL REINFORCEMENT DETAILS.
15. TRACER WIRE SHALL BE RHW #10 AWG. TRACER WIRE SHALL BE SECURED TO DUCT WITH PLASTIC ZIP TIE.
16. VAULTS SHALL BE DESIGNED TO WITHSTAND EXTERNAL LOADINGS EQUIVALENT TO THOSE APPLIED BY TYPICAL HS–30 LOADING AND THAT OF THE SURROUNDING EARTHEN BACKFILL.
17. REINFORCING STEEL SHALL NOT ENCIRCLE ANY SINGLE CONDUIT. FIBERGLASS REBAR MAY BE USED AS NECESSARY TO AVOID THIS.
18. CABLE FURNISH AND INSTALL SHALL BE PERFORMED BY OTHERS AND IS FOR INFORMATION ONLY.

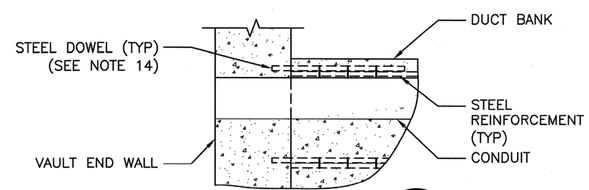

DETAIL 3

SCALE 1"=1'
TYPICAL REBAR DETAIL SIDE VIEW

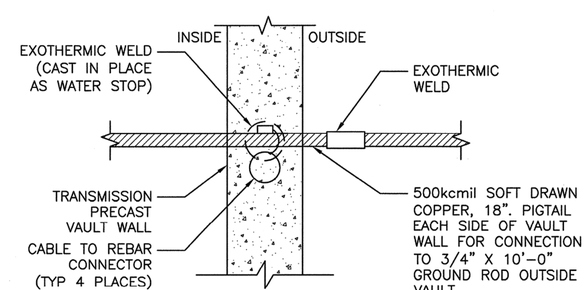

DETAIL 4

SCALE 1"=2'
GROUND WIRE DETAIL

POD05
115kV VAULT DETAILS

VAULT SERIAL NO.	DATE	MARK	NATURE REVISIONS	MADE	CHK'D	REV'D

P:\Projects\122724 – Central Waterfront\DD (drawing & design)\DWG (drawings)\03 Line (plans, profiles & details–NFO)\100% Design\100% Details_Vaults.dwg
Jun–24–11 10:51am

POWER ENGINEERS

THIS PLAN IS FOR INFORMATION ONLY. WORK SHOWN ON THIS PLAN IS NOT IN THIS CONTRACT.

JOB NO. PC R/W CO

VAULT PLAN NO.

SHEET 41 OF 68

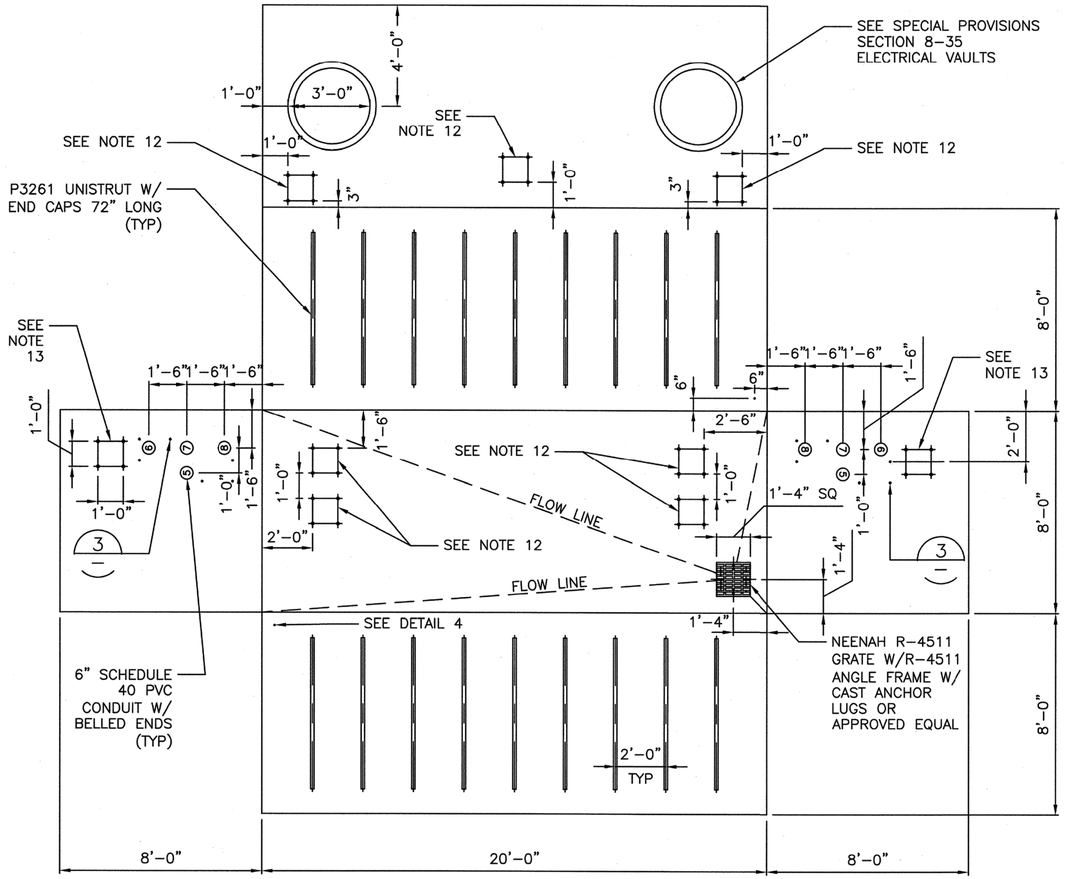

TRANSMISSION PRECAST VAULT 2 MA–US–2 DEVELOPMENT PLAN

SCALE 1"=3'

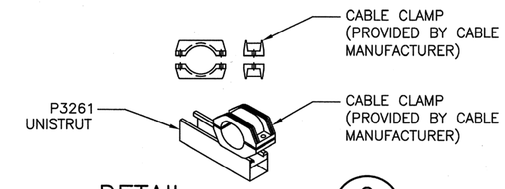

DETAIL 2

SCALE 1"=1'
TRANSMISSION PRECAST VAULT CABLE CLAMP

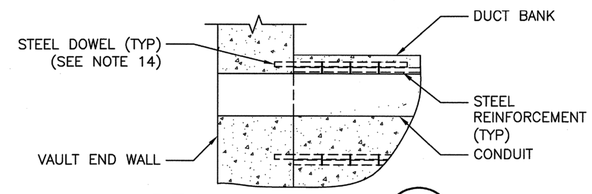

DETAIL 3

SCALE 1"=1'
TYPICAL REBAR DETAIL SIDE VIEW

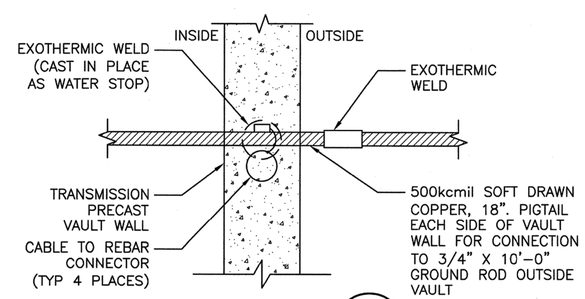

DETAIL 4

SCALE 1"=2'
GROUND WIRE DETAIL

NOTES:

1. SEE SPECIAL PROVISIONS SECTION 8–35 ELECTRICAL VAULTS FOR CONSTRUCTION GUIDELINES.
2. ALL DIMENSIONS ARE INSIDE DIMENSIONS.
3. ALL UNISTRUT TO BE SECURED TO VAULT'S REINFORCING STEEL.
4. SUMP SHALL BE CAPABLE OF HANDLING SUMP PUMP, MINIMUM 4" DEEP.
5. CONDUITS MUST ALWAYS BE INSTALLED IN THE SAME DIRECTION.
6. CABLE & ACCESSORIES CONTRACTOR TO FIELD VERIFY ACTUAL VAULT DEPTHS. CONTRACTOR IS RESPONSIBLE FOR ALL SAFETY & ENTRY/EXIT REQUIREMENTS.
7. ALL CHIMNEY RINGS SHALL BE MORTARED OR OTHERWISE "KEYED" TO PREVENT HORIZONTAL DISPLACEMENT AND SHALL BE SECURELY MORTARED TO VAULT ROOF.
8. VAULT RING SHALL BE SECURELY FASTENED TO THE VAULT ROOF OR CHIMNEY USING INSERTS AND BOLTS OR OTHER MEANS WITH PRIOR APPROVAL.
9. REINFORCING STEEL SHALL BE BONDED TO 500kcmil SOFT DRAWN BARE COPPER BONDING JUMPERS.
10. MULTISECTION PRECAST VAULTS SHALL INCORPORATE EITHER SHIPLAP OR TONGUE AND GROOVE JOINTS UTILIZING APPROPRIATE SILICONE, POLYMERIC OR ELASTOMERIC SEALANTS.
11. IF MULTISECTION PRECAST VAULT IS USED, PROVIDE MINIMUM 3" EDGE CLEARANCE ON UNISTRUT FROM JOINTS.
12. PULLING HARDWARE USING A MINIMUM OF FOUR INDIVIDUAL ANCHORS AND WALLS SHALL BE GOOD FOR 20,000lbs MINIMUM WORKING TENSION PER LOCATION.
13. PULLING HARDWARE USING A MINIMUM OF FOUR INDIVIDUAL ANCHORS AND WALLS SHALL BE GOOD FOR 10,000lbs MINIMUM WORKING TENSION PER LOCATION.
14. STEEL DOWELING SHALL PENETRATE VAULT WALL A MINIMUM OF 3". STEEL SHALL OVERLAP 1'–6" AND BE TIED TOGETHER. SEE TRENCH DETAIL POD02 FOR STEEL REINFORCEMENT DETAILS.
15. VAULTS SHALL BE DESIGNED TO WITHSTAND EXTERNAL LOADINGS EQUIVALENT TO THOSE APPLIED BY TYPICAL HS–30 LOADING AND THAT OF THE SURROUNDING EARTHEN BACKFILL.
16. REINFORCING STEEL SHALL NOT ENCIRCLE ANY SINGLE CONDUIT. FIBERGLASS REBAR MAY BE USED AS NECESSARY TO AVOID THIS.
17. CABLE FURNISH AND INSTALL SHALL BE PERFORMED BY OTHERS AND IS FOR INFORMATION ONLY.

POD06
115kV VAULT DETAILS

THIS PLAN IS FOR INFORMATION ONLY. WORK SHOWN ON THIS PLAN IS NOT IN THIS CONTRACT.

POWER ENGINEERS

VAULT SERIAL NO.	DATE	MARK	NATURE REVISIONS	MADE CHK'D	REV'D

P:\Projects\122724 – Central Waterfront\DD (drawing & design)\DWG (drawings)\03 Line (plans, profiles & details–NFC)\100% Design\00% Details_Vaults.dwg
Jun–24–11 10:51am

JOB NO. PC R/W CO
VAULT PLAN NO.
SHEET 42 OF 68

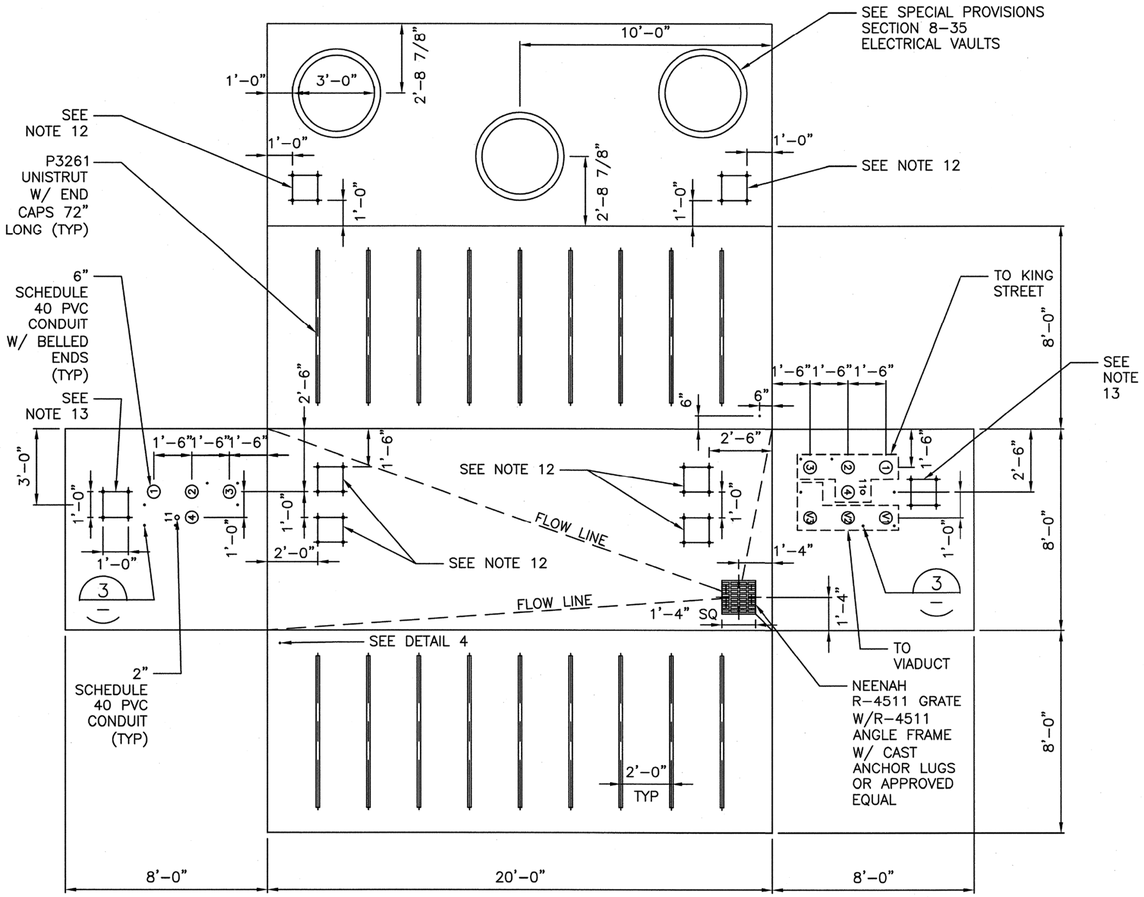

TRANSMISSION PRECAST VAULT 3 MA–US–1 DEVELOPMENT PLAN

SCALE 1"=3'

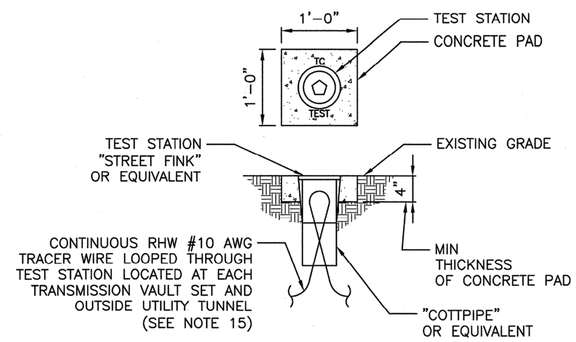

DETAIL 1

SCALE 1"=1'
TRANSMISSION PRECAST VAULT TEST STATION

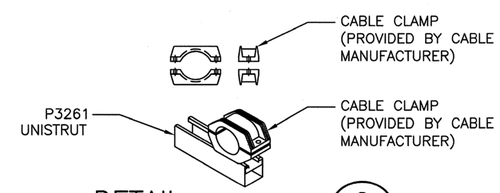

DETAIL 2

SCALE 1"=1'
TRANSMISSION PRECAST VAULT CABLE CLAMP

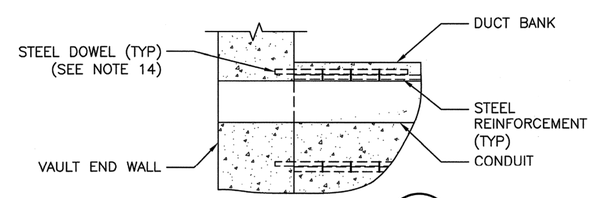

DETAIL 3

SCALE 1"=1'
TYPICAL REBAR DETAIL SIDE VIEW

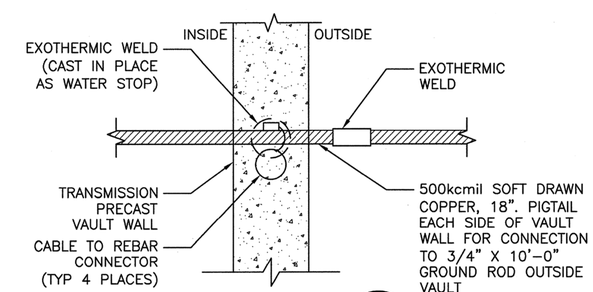

DETAIL 4

SCALE 1"=2'
GROUND WIRE DETAIL

NOTES:

1. SEE SPECIAL PROVISIONS SECTION 8–35 ELECTRICAL VAULTS FOR CONSTRUCTION GUIDELINES.
2. ALL DIMENSIONS ARE INSIDE DIMENSIONS.
3. ALL UNISTRUT TO BE SECURED TO VAULT'S REINFORCING STEEL.
4. SUMP SHALL BE CAPABLE OF HANDLING SUMP PUMP, MINIMUM 4" DEEP.
5. CONDUITS MUST ALWAYS BE INSTALLED IN THE SAME DIRECTION.
6. CABLE & ACCESSORIES CONTRACTOR TO FIELD VERIFY ACTUAL VAULT DEPTHS. CONTRACTOR IS RESPONSIBLE FOR ALL SAFETY & ENTRY/EXIT REQUIREMENTS.
7. ALL CHIMNEY RINGS SHALL BE MORTARED OR OTHERWISE "KEYED" TO PREVENT HORIZONTAL DISPLACEMENT AND SHALL BE SECURELY MORTARED TO VAULT ROOF.
8. VAULT RING SHALL BE SECURELY FASTENED TO THE VAULT ROOF OR CHIMNEY USING INSERTS AND BOLTS OR OTHER MEANS WITH PRIOR APPROVAL.
9. REINFORCING STEEL SHALL BE BONDED TO 500kcmil SOFT DRAWN BARE COPPER BONDING JUMPERS.
10. MULTISECTION PRECAST VAULTS SHALL INCORPORATE EITHER SHIPLAP OR TONGUE AND GROOVE JOINTS UTILIZING APPROPRIATE SILICONE, POLYMERIC OR ELASTOMERIC SEALANTS.
11. IF MULTISECTION PRECAST VAULT IS USED, PROVIDE MINIMUM 3" EDGE CLEARANCE ON UNISTRUT FROM JOINTS.
12. PULLING HARDWARE USING A MINIMUM OF FOUR INDIVIDUAL ANCHORS AND WALLS SHALL BE GOOD FOR 20,000lbs MINIMUM WORKING TENSION PER LOCATION.
13. PULLING HARDWARE USING A MINIMUM OF FOUR INDIVIDUAL ANCHORS AND WALLS SHALL BE GOOD FOR 10,000lbs MINIMUM WORKING TENSION PER LOCATION.
14. STEEL DOWELING SHALL PENETRATE VAULT WALL A MINIMUM OF 3". STEEL SHALL OVERLAP 1'–6" AND BE TIED TOGETHER. SEE TRENCH DETAIL POD02 AND POD03 FOR STEEL REINFORCEMENT DETAILS.
15. TRACER WIRE SHALL BE RHW #10 AWG. TRACER WIRE SHALL BE SECURED TO DUCT WITH PLASTIC ZIP TIE.
16. VAULTS SHALL BE DESIGNED TO WITHSTAND EXTERNAL LOADINGS EQUIVALENT TO THOSE APPLIED BY TYPICAL HS–30 LOADING AND THAT OF THE SURROUNDING EARTHEN BACKFILL.
17. REINFORCING STEEL SHALL NOT ENCIRCLE ANY SINGLE CONDUIT. FIBERGLASS REBAR MAY BE USED AS NECESSARY TO AVOID THIS.
18. CABLE FURNISH AND INSTALL SHALL BE PERFORMED BY OTHERS AND IS FOR INFORMATION ONLY.

POD07
115kV VAULT DETAILS

VAULT SERIAL NO.	DATE	MARK	NATURE REVISIONS	MADE	CHK'D	REV'D

100% Details_Vaults.dwg

P:\Projects\122724 – Central Waterfront\DD (drawing & design)\DWG (drawings)\03 Line (plans, profiles & details–NFC)\100% Design\
Jun–24–11 10:52am

POWER ENGINEERS

THIS PLAN IS FOR INFORMATION ONLY. WORK SHOWN ON THIS PLAN IS NOT IN THIS CONTRACT.

JOB NO. PC R/W CO

VAULT PLAN NO.

SHEET 43 OF 68

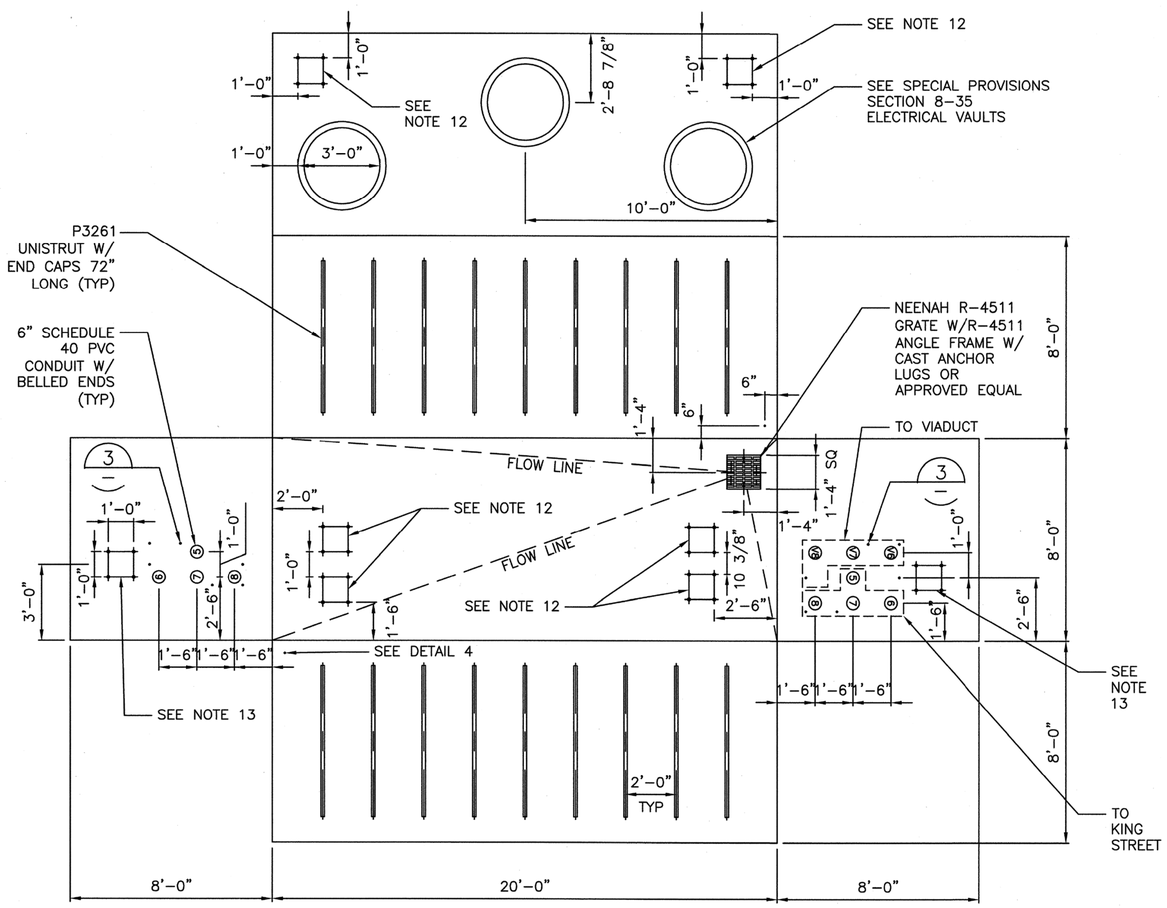

TRANSMISSION PRECAST VAULT 4 MA–US–2 DEVELOPMENT PLAN

SCALE 1"=3'

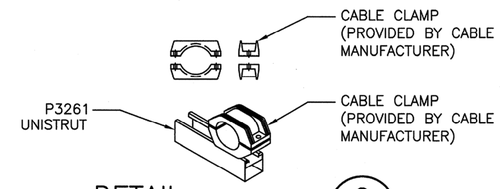

DETAIL 2

SCALE 1"=1'
TRANSMISSION PRECAST VAULT CABLE CLAMP

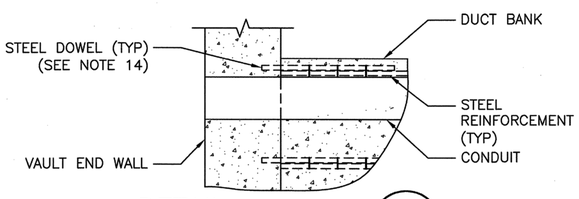

DETAIL 3

SCALE 1"=1'
TYPICAL REBAR DETAIL SIDE VIEW

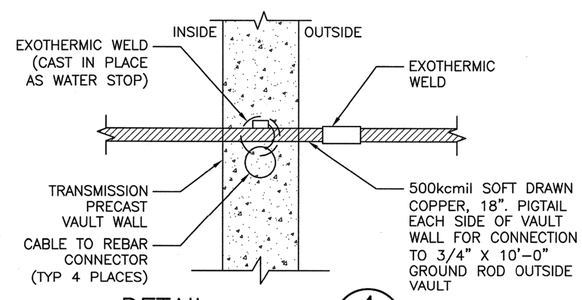

DETAIL 4

SCALE 1"=2'
GROUND WIRE DETAIL

NOTES:

1. SEE SPECIAL PROVISIONS SECTION 8–35 ELECTRICAL VAULTS FOR CONSTRUCTION GUIDELINES.
2. ALL DIMENSIONS ARE INSIDE DIMENSIONS.
3. ALL UNISTRUT TO BE SECURED TO VAULT'S REINFORCING STEEL.
4. SUMP SHALL BE CAPABLE OF HANDLING SUMP PUMP, MINIMUM 4" DEEP.
5. CONDUITS MUST ALWAYS BE INSTALLED IN THE SAME DIRECTION.
6. CABLE & ACCESSORIES CONTRACTOR TO FIELD VERIFY ACTUAL VAULT DEPTHS. CONTRACTOR IS RESPONSIBLE FOR ALL SAFETY & ENTRY/EXIT REQUIREMENTS.
7. ALL CHIMNEY RINGS SHALL BE MORTARED OR OTHERWISE "KEYED" TO PREVENT HORIZONTAL DISPLACEMENT AND SHALL BE SECURELY MORTARED TO VAULT ROOF.
8. VAULT RING SHALL BE SECURELY FASTENED TO THE VAULT ROOF OR CHIMNEY USING INSERTS AND BOLTS OR OTHER MEANS WITH PRIOR APPROVAL.
9. REINFORCING STEEL SHALL BE BONDED TO 500kcmil SOFT DRAWN BARE COPPER BONDING JUMPERS.
10. MULTISECTION PRECAST VAULTS SHALL INCORPORATE EITHER SHIPLAP OR TONGUE AND GROOVE JOINTS UTILIZING APPROPRIATE SILICONE, POLYMERIC OR ELASTOMERIC SEALANTS.
11. IF MULTISECTION PRECAST VAULT IS USED, PROVIDE MINIMUM 3" EDGE CLEARANCE ON UNISTRUT FROM JOINTS.
12. PULLING HARDWARE USING A MINIMUM OF FOUR INDIVIDUAL ANCHORS AND WALLS SHALL BE GOOD FOR 20,000lbs MINIMUM WORKING TENSION PER LOCATION.
13. PULLING HARDWARE USING A MINIMUM OF FOUR INDIVIDUAL ANCHORS AND WALLS SHALL BE GOOD FOR 10,000lbs MINIMUM WORKING TENSION PER LOCATION.
14. STEEL DOWELING SHALL PENETRATE VAULT WALL A MINIMUM OF 3". STEEL SHALL OVERLAP 1'–6" AND BE TIED TOGETHER. SEE TRENCH DETAIL POD02 AND POD03 FOR STEEL REINFORCEMENT DETAILS.
15. VAULTS SHALL BE DESIGNED TO WITHSTAND EXTERNAL LOADINGS EQUIVALENT TO THOSE APPLIED BY TYPICAL HS–30 LOADING AND THAT OF THE SURROUNDING EARTHEN BACKFILL.
16. REINFORCING STEEL SHALL NOT ENCIRCLE ANY SINGLE CONDUIT. FIBERGLASS REBAR MAY BE USED AS NECESSARY TO AVOID THIS.
17. CABLE FURNISH AND INSTALL SHALL BE PERFORMED BY OTHERS AND IS FOR INFORMATION ONLY.

POD08
115kV VAULT DETAILS

THIS PLAN IS FOR INFORMATION ONLY. WORK SHOWN ON THIS PLAN IS NOT IN THIS CONTRACT.

POWER ENGINEERS

VAULT SERIAL NO.	DATE	MARK	NATURE REVISIONS	MADE	CHK'D	REV'D

P:\Projects\122724 – Central Waterfront\DD (drawing & design)\DWG (drawings)\03 Line (plans, profiles & details–NFC)\100% Design\100% Details_Vaults.dwg
Jun–24–11 10:52am

JOB NO.	PC
	R/W
	CO

VAULT PLAN NO.

SHEET 44 OF 68

NOTES:

1. REFER TO DRAWINGS POD01, POD02 AND POD03 FOR DUCT BANK SECTION DETAILS.
2. REFER TO SPECIAL PROVISIONS SECTION 8–35 ELECTRICAL VAULTS FOR HIGH STRENGTH FTB CONCRETE POUR AROUND ELECTRICAL VAULTS.
3. CROSSING UTILITIES NOT SHOWN FOR CLARITY, REFER TO POP03 FOR ADDITIONAL INFORMATION.

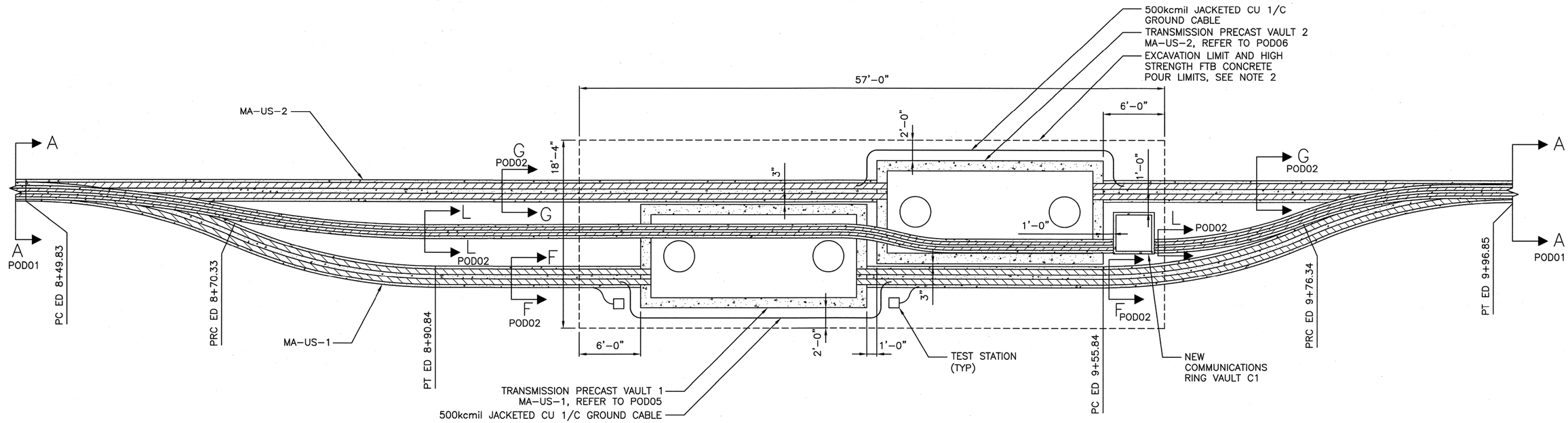

LEGEND:

CONDUIT

CONCRETE

NEW TRANSMISSION PRECAST VAULTS 1 & 2 BYPASS AND EXCAVATION LIMIT

SCALE 1"=5'

POD09
115kV VAULT DETAILS

VAULT SERIAL NO.	DATE	MARK	NATURE REVISIONS	MADE	CHK'D	REV'D

POWER ENGINEERS

THIS PLAN IS FOR INFORMATION ONLY. WORK SHOWN ON THIS PLAN IS NOT IN THIS CONTRACT.

JOB NO. PC R/W CO

VAULT PLAN NO.

SHEET 45 OF 68

P:\Projects\12724 – Central Waterfront\DD (drawing & design)\DWG (drawings)\03 Line (plans, profiles & details–NFC)\100% Design\100% Details_Vaults.dwg
Jun–24–11 11:04am

NOTES:

1. REFER TO DRAWINGS POD01, POD02 AND POD03 FOR DUCT BANK SECTION DETAILS.
2. REFER TO SPECIAL PROVISIONS SECTION 8-35 ELECTRICAL VAULTS FOR HIGH STRENGTH FTB CONCRETE POUR AROUND ELECTRICAL VAULTS.
3. CROSSING UTILITIES NOT SHOWN FOR CLARITY, REFER TO POP06 AND POR06 FOR ADDITIONAL INFORMATION.

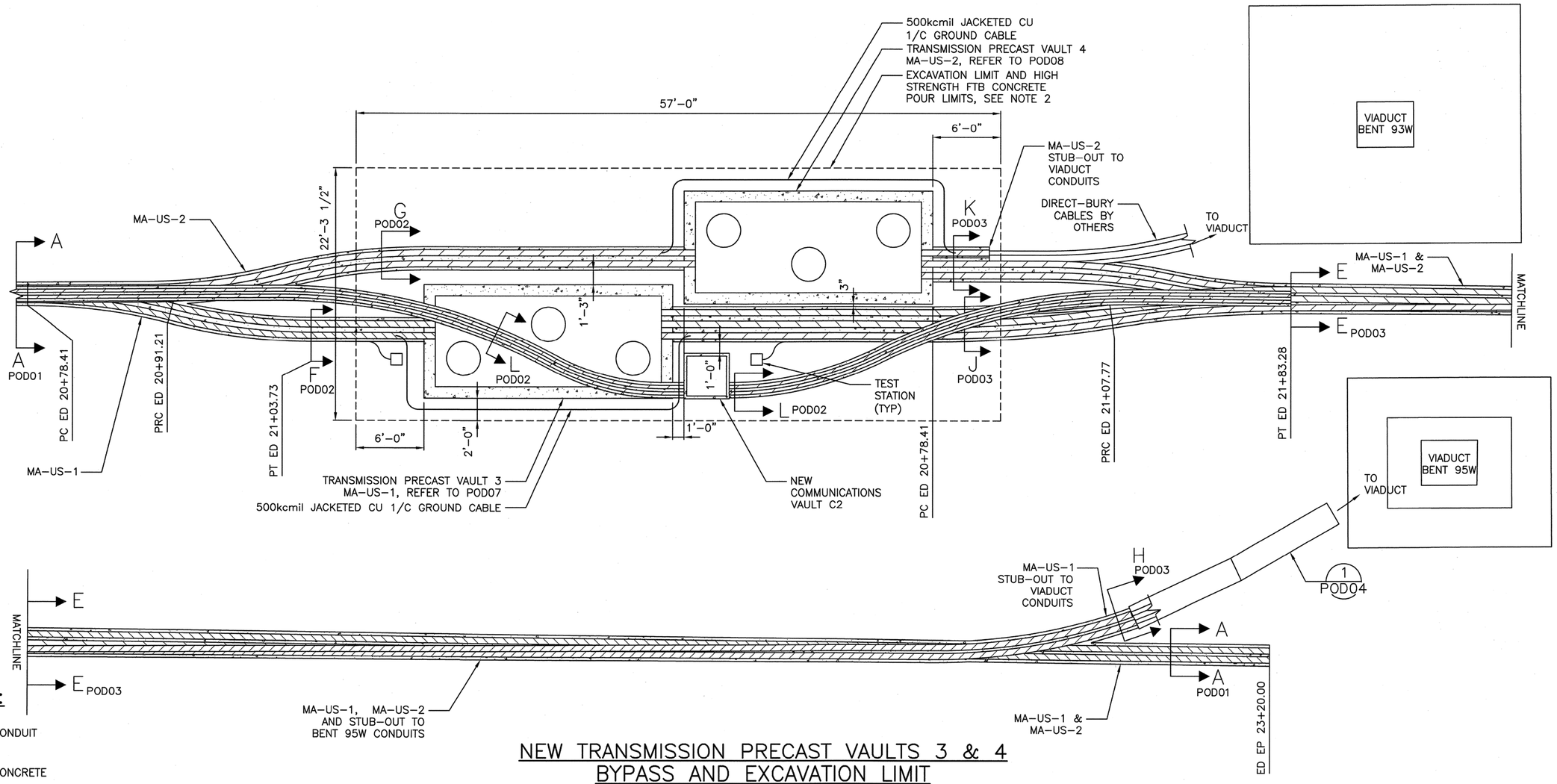

LEGEND:

CONDUIT

CONCRETE

NEW TRANSMISSION PRECAST VAULTS 3 & 4 BYPASS AND EXCAVATION LIMIT

SCALE 1"=5'

POD10
115kV VAULT DETAILS

THIS PLAN IS FOR INFORMATION ONLY. WORK SHOWN ON THIS PLAN IS NOT IN THIS CONTRACT.

POWER ENGINEERS

VAULT SERIAL NO.	DATE	MARK	NATURE REVISIONS	MADE	CHK'D	REV'D

P:\Projects\122724 - Central Waterfront\DD (drawing & design)\DWG (drawings)\03 Line (plans, profiles & details-NFC)\100% Design\100% Details_Vaults.dwg
Jun-24-11 11:05am

JOB NO.	PC R/W CO
VAULT PLAN NO.	
SHEET 46 OF 68	

NOTES:

1. REFER TO PLAN AND PROFILE DRAWINGS FOR INSTALLATION OF TRANSMISSION VAULTS.
2. 500kcmil GROUND WIRE SHALL BE BONDED TO VAULT GROUND BUS.
3. 500kcmil GROUND WIRE SHALL BE CONNECTED TO 3/4" X 10' GROUND ROD WITH EXOTHERMIC CONNECTORS OUTSIDE OF VAULT.
4. CABLE FURNISH AND INSTALL SHALL BE PERFORMED BY OTHERS AND IS FOR INFORMATION ONLY.

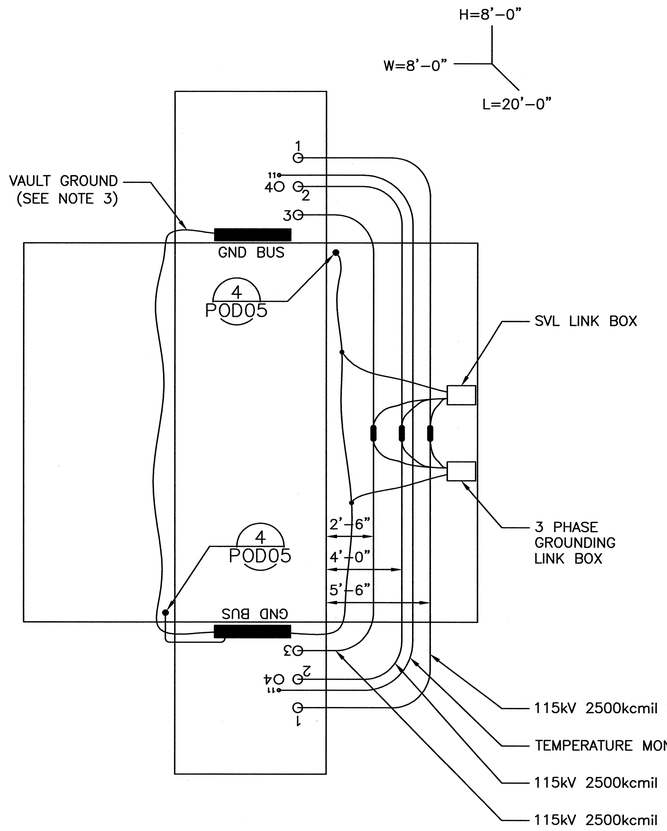

115KV THREE LINE DIAGRAM

SIDE VIEW DETAIL
CABLE AND SPLICING INSTALLATION
TRANSMISSION PRECAST VAULT 1
SCALE 1"=4'

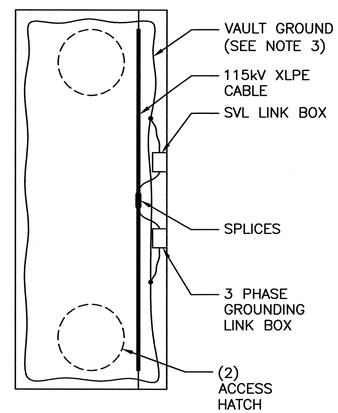

115KV ONE LINE DIAGRAM

TOP VIEW DETAIL
CABLE AND SPLICING INSTALLATION
TRANSMISSION PRECAST VAULT 1
SCALE 1"=4'

MA-US-1: TRANSMISSION PRECAST VAULT 1 (NEAR SENECA STREET)

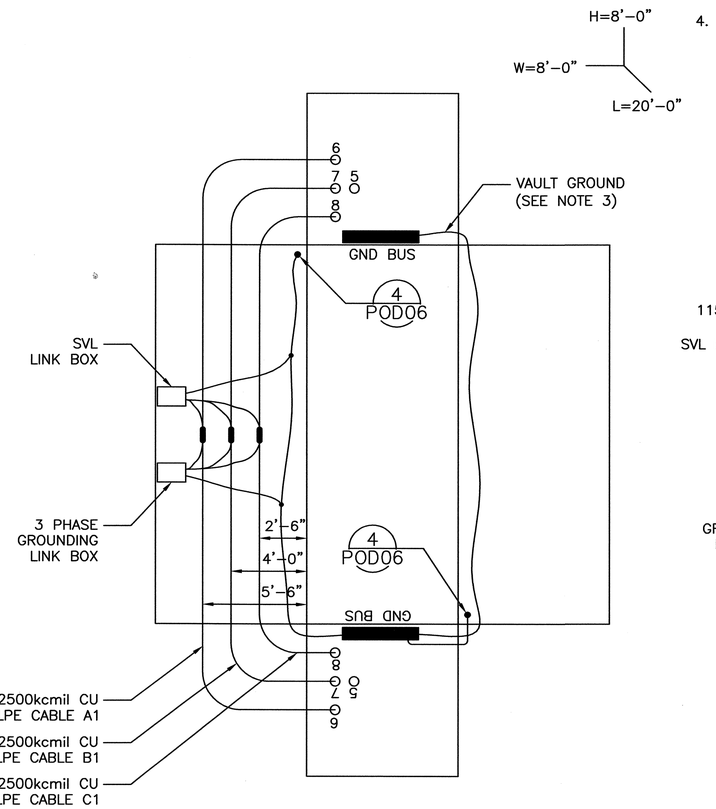

115KV THREE LINE DIAGRAM

SIDE VIEW DETAIL
CABLE AND SPLICING INSTALLATION
TRANSMISSION PRECAST VAULT 2
SCALE 1"=4'

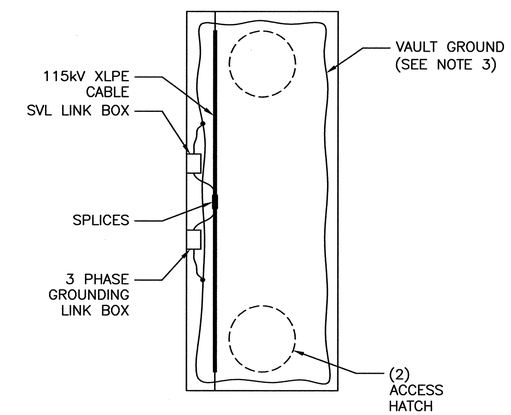

115KV ONE LINE DIAGRAM

TOP VIEW DETAIL
CABLE AND SPLICING INSTALLATION
TRANSMISSION PRECAST VAULT 2
SCALE 1"=4'

MA-US-2: TRANSMISSION PRECAST VAULT 2 (NEAR SENECA STREET)

POD11
115kV VAULT DETAILS

POWER ENGINEERS

0 Ø 1
IF THIS BAR DOES NOT MEASURE 1" THEN DRAWING IS NOT PLOTTED TO ORIGINAL SCALE.

APPROVED FOR ADVERTISING
NANCY LOCKE
DEPARTMENT OF FINANCE & ADMINISTRATIVE SERVICES
SEATTLE, WASHINGTON . . . . . 20 . .
BY: . . . . . .
PURCHASING & CONTRACTING SERVICES DIRECTOR

NAME OR INITIALS AND DATE
DESIGNED .GVH . . . . . .
CHECKED . PWS . . . . . .
DRAWN . LBJ . . . . . 06/29/11.
CHECKED . BJA . . . . . .

INITIALS AND DATE
REVIEWED:
DES. #### . . . CONST. #### . . .
SDOT #### . . . PROJ. MGR. ####.
RECEIVED #### . . . . . .
REVISED AS BUILT #### . . . . . .

ALL WORK SHALL BE DONE IN ACCORDANCE WITH THE CITY OF SEATTLE STANDARD PLANS AND SPECIFICATIONS AND OTHER DOCUMENTS CALLED FOR IN SECTION 0-02.3 OF THE PROJECT MANUAL.

JERRY A. JOHNSON STATE OF WASHINGTON 18799 REGISTERED PROFESSIONAL ENGINEER

City of Seattle
Seattle Department of Transportation
ORDINANCE NO. . . . . APPROVED. . . . . .
FUND: . . . . . .
SCALE: NONE INSPECTOR'S BOOK . . . . . .

TRANSMISSION LINE RELOCATION

JOB NO. PC R/W CO
VAULT PLAN NO.
SHEET 47 OF 68

VAULT SERIAL NO.	MARK	DATE	NATURE REVISIONS	MADE	CHK'D	REV'D

P:\Projects\122724 - Central Waterfront\DD (drawing & design)\DWG (drawings)\03 Line (plans, profiles & details-NFO)\100% Design\100% Details_Vaults.dwg
Jun-29-11 2:27pm

NOTES:

1. REFER TO PLAN AND PROFILE DRAWINGS FOR INSTALLATION OF TRANSMISSION VAULTS.
2. 500kcmil GROUND WIRE SHALL BE BONDED TO VAULT GROUND BUS.
3. 500kcmil GROUND WIRE SHALL BE CONNECTED TO 3/4" X 10' GROUND ROD WITH EXOTHERMIC CONNECTORS OUTSIDE OF VAULT.
4. CABLE FURNISH AND INSTALL SHALL BE PERFORMED BY OTHERS AND IS FOR INFORMATION ONLY.

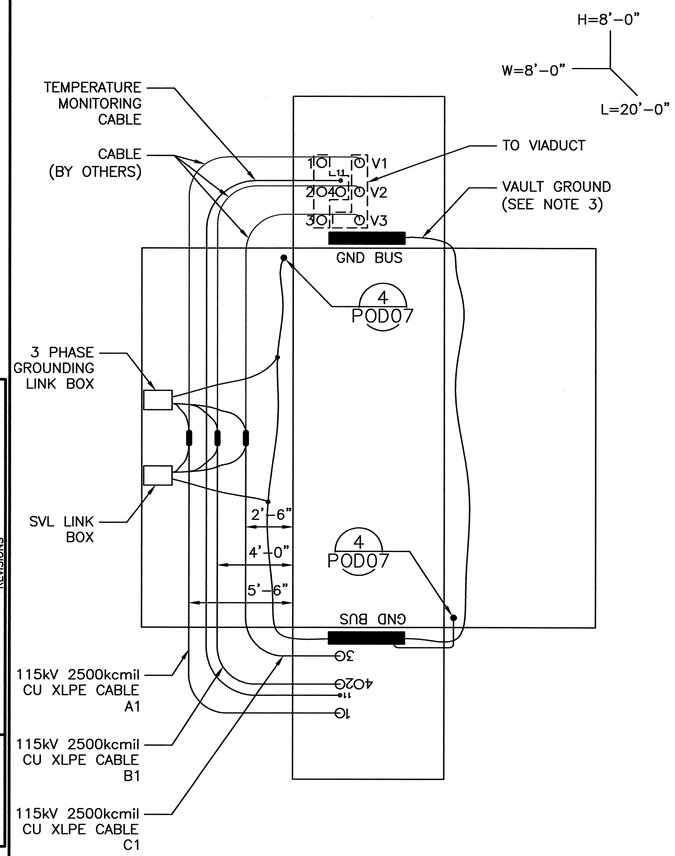

115KV THREE LINE DIAGRAM

SIDE VIEW DETAIL
CABLE AND SPLICING INSTALLATION
TRANSMISSION PRECAST VAULT 3
SCALE 1"=4'

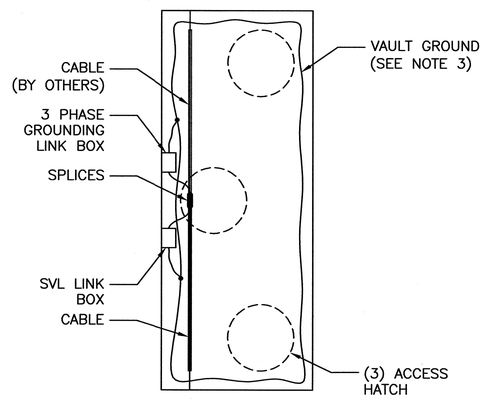

115KV ONE LINE DIAGRAM

TOP VIEW DETAIL
CABLE AND SPLICING INSTALLATION
TRANSMISSION PRECAST VAULT 3
SCALE 1"=4'

MA-US-1: TRANSMISSION PRECAST VAULT 3 (NEAR YESLER WAY)

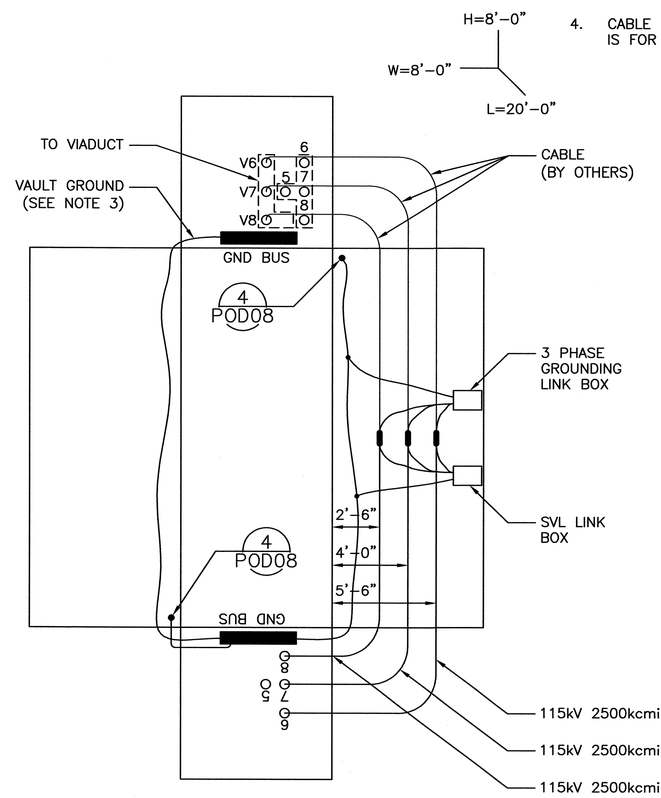

115KV THREE LINE DIAGRAM

SIDE VIEW DETAIL
CABLE AND SPLICING INSTALLATION
TRANSMISSION PRECAST VAULT 4
SCALE 1"=4'

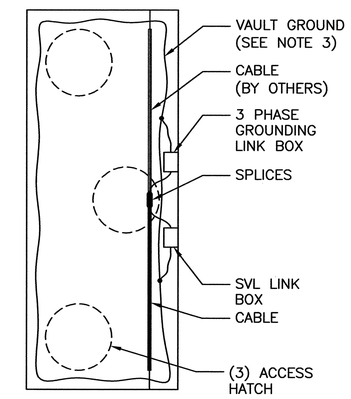

115KV ONE LINE DIAGRAM

TOP VIEW DETAIL
CABLE AND SPLICING INSTALLATION
TRANSMISSION PRECAST VAULT 4
SCALE 1"=4'

MA-US-2: TRANSMISSION PRECAST VAULT 4 (NEAR YESLER WAY)

POD12
115kV VAULT DETAILS

VAULT SERIAL NO.	DATE	MARK	NATURE REVISIONS	MADE	CHK'D	REV'D

P:\Projects\12274 - Central Waterfront\DD (drawing & design)\DWG (drawings)\03 Line (plans, profiles & details-NFC)\100% Design\ 100% Details_Vaults.dwg
Jun-29-11 2:28pm

POWER ENGINEERS

0 Ø 1
IF THIS BAR DOES NOT MEASURE 1" THEN DRAWING IS NOT PLOTTED TO ORIGINAL SCALE.

APPROVED FOR ADVERTISING
NANCY LOCKE
DEPARTMENT OF FINANCE & ADMINISTRATIVE SERVICES
SEATTLE, WASHINGTON . . . . . 20 . . .
BY: . . . . . .
PURCHASING & CONTRACTING SERVICES DIRECTOR

NAME OR INITIALS AND DATE
DESIGNED .GVH . . . . . .
CHECKED . PWS . . . . . .
DRAWN . LBJ . . . . . 06/29/11.
CHECKED . BJA . . . . . .
ALL WORK SHALL BE DONE IN ACCORDANCE WITH THE CITY OF SEATTLE STANDARD PLANS AND SPECIFICATIONS AND OTHER DOCUMENTS CALLED FOR IN SECTION 0-02.3 OF THE PROJECT MANUAL.

INITIALS AND DATE
REVIEWED:
DES. #### . . . CONST. #### . . .
SDOT #### . . . PROJ. MGR. ####.
RECEIVED #### . . . . . .
REVISED AS BUILT ####. . . . . .

JERRY A. YOUNGQUIST
STATE OF WASHINGTON
38985
REGISTERED PROFESSIONAL ENGINEER
5 July 2011

City of Seattle
Seattle Department of Transportation
ORDINANCE NO. . . . . APPROVED. . . . . .
FUND: . . . . . .
SCALE: NONE INSPECTOR'S BOOK. . . . . .

TRANSMISSION LINE RELOCATION

JOB NO. PC R/W CO
VAULT PLAN NO.
SHEET 48 OF 68

NOTES:

1. CABLE FURNISH AND INSTALL SHALL BE PERFORMED BY OTHERS AND IS FOR INFORMATION ONLY.

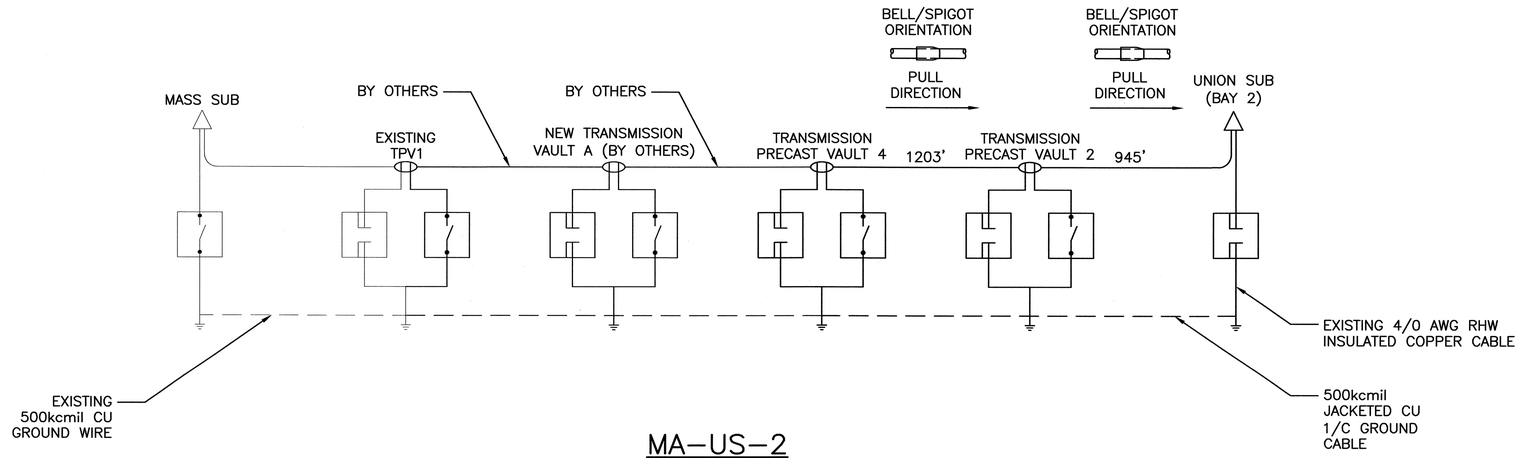

MA–US–2
115KV SHEATH BONDING SCHEMATIC

NOT TO SCALE

LEGEND:

- TERMINATOR
- 3 PHASE DISCONNECT LINK BOX
- PARALLEL GROUND CONDUCTOR
- GROUND ROD
- SHEATH VOLTAGE LIMITER (SVL) LINK BOX
- SHIELD BREAK SPLICE
- NORMAL SPLICE

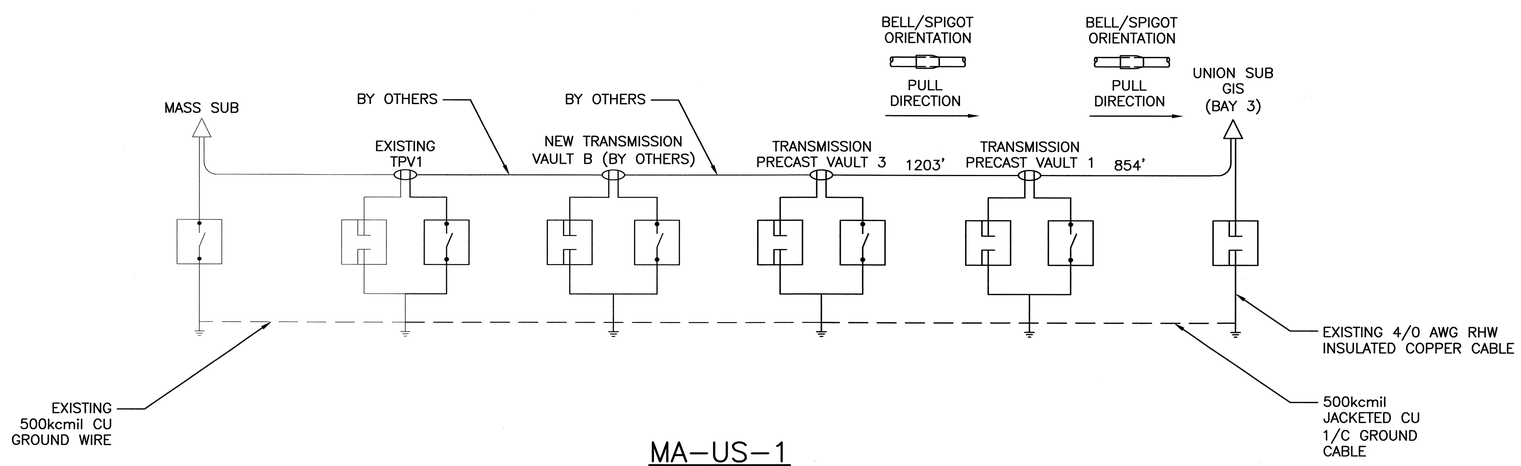

MA–US–1
115KV SHEATH BONDING SCHEMATIC

NOT TO SCALE

POD14
115KV DETAILS

VAULT SERIAL NO.	DATE	MARK	NATURE REVISIONS	MADE	CHK'D	REV'D

P:\Projects\122724 – Central Waterfront\DD (drawing & design)\DWG (drawings)\03 Line (plans, profiles & details–NFC)\100% Design\ 00% Details_Misc.dwg
Jun–29–11 2:52pm

POWER ENGINEERS

0 Ø 1
IF THIS BAR DOES NOT MEASURE 1" THEN DRAWING IS NOT PLOTTED TO ORIGINAL SCALE.

APPROVED FOR ADVERTISING
NANCY LOCKE
DEPARTMENT OF FINANCE & ADMINISTRATIVE SERVICES
SEATTLE, WASHINGTON . . . . . 20 . .
BY: . . . . . .
PURCHASING & CONTRACTING SERVICES DIRECTOR

NAME OR INITIALS AND DATE
DESIGNED .GVH . . . . . .
CHECKED . PWS . . . . . .
DRAWN . LBJ . . . . . 06/29/11.
CHECKED . BJA . . . . . .

INITIALS AND DATE
REVIEWED:
DES. #### . . . CONST. #### . . .
SDOT #### . . . PROJ. MGR. #### .
RECEIVED #### . . . . . .
REVISED AS BUILT #### . . . . . .

ALL WORK SHALL BE DONE IN ACCORDANCE WITH THE CITY OF SEATTLE STANDARD PLANS AND SPECIFICATIONS AND OTHER DOCUMENTS CALLED FOR IN SECTION 0–02.3 OF THE PROJECT MANUAL.

STATE OF WASHINGTON
JERRY A. JOHNSON
REGISTERED PROFESSIONAL ENGINEER

City of Seattle
Seattle Department of Transportation
ORDINANCE NO. . . . . APPROVED. . . . . .
FUND: . . . . . .
SCALE: NONE INSPECTOR'S BOOK . . . . . .

TRANSMISSION LINE RELOCATION

JOB NO. PC R/W CO
VAULT PLAN NO.
SHEET 50 OF 68

NOTES:

1. CABLE FURNISH AND INSTALL SHALL BE PERFORMED BY OTHERS AND IS FOR INFORMATION ONLY.

115kV CABLE PULLING CALCULATIONS

CABLE PULL		CONDUIT SIZE AND TYPE	LENGTH OF RUN (IN FEET)	CONDUCTOR			FORWARD		REVERSED	
FROM	TO			kV	SIZE, kcmil	TYPE	PULLING TENSION (IN POUNDS)	SIDEWALL PRESSURE (IN lb/ft OF RADIUS)	PULLING TENSION (IN POUNDS)	SIDEWALL PRESSURE (IN lb/ft OF RADIUS)
UNION SUB BAY 2	TRANSMISSION VAULT 2	6" PVC	945	115kV	2500 CU	1/C	7192	150	9370	234
UNION SUB BAY 3	TRANSMISSION VAULT 1	6" PVC	854	115kV	2500 CU	1/C	6271	112	8608	215
TRANSMISSION VAULT 1	TRANSMISSION VAULT 3	6" PVC	1203	115kV	2500 CU	1/C	8378	151	8320	151
TRANSMISSION VAULT 2	TRANSMISSION VAULT 4	6" PVC	1203	115kV	2500 CU	1/C	8241	147	7297	61

MAXIMUM ALLOWABLE PULLING TENSIONS AND SIDEWALL PRESSURES IN ACCORDANCE WITH INDUSTRY STANDARD:

2500 kcmil CU XLPE 115kV, 1/C: MAX PULLING TENSION = 20,000 lbs, MAX SIDEWALL PRESSURE = APPROXIMATELY 1,600 lbs/ft.

115KV CABLE PULLING CALCULATIONS

115kV CABLE AND SPLICE INSTALLATION

CABLE INSTALLATION NOTES						SPLICE / TERMINATION NOTES					
CABLE PULL		LENGTH (IN FEET)	NUMBER OF RUNS	VOLTAGE CLASS	CABLE TO BE INSTALLED	LOCATION	QUANTITY	STYLE	VOLTAGE CLASS	CABLE SIZE	TO BE INSTALLED
FROM	TO										
UNION SUB BAY 2	TRANSMISSION VAULT 2	945	3	115kV	1-1/C 2500kcmil XLPE COPPER	UNION SUB BAY 2	3	TERMINATION (GIS CONNECTION)	115kV	2500kcmil CU XLPE	PER CABLE MANUFACTURER
						TRANSMISSION VAULT 2	3	STRAIGHT SPLICE	115kV	2500kcmil CU XLPE	PER CABLE MANUFACTURER
UNION SUB BAY 3	TRANSMISSION VAULT 1	854	3	115kV	1-1/C 2500kcmil XLPE COPPER	UNION SUB BAY 3	3	TERMINATION	115kV	2500kcmil CU XLPE	PER CABLE MANUFACTURER
						TRANSMISSION VAULT 1	3	STRAIGHT SPLICE	115kV	2500kcmil CU XLPE	PER CABLE MANUFACTURER
TRANSMISSION VAULT 1	TRANSMISSION VAULT 3	1203	3	115kV	1-1/C 2500kcmil XLPE COPPER	TRANSMISSION VAULT 3	3	STRAIGHT SPLICE	115kV	2500kcmil CU XLPE*	PER CABLE MANUFACTURER
TRANSMISSION VAULT 2	TRANSMISSION VAULT 4	1203	3	115kV	1-1/C 2500kcmil XLPE COPPER	TRANSMISSION VAULT 4	3	STRAIGHT SPLICE	115kV	2500kcmil CU XLPE*	PER CABLE MANUFACTURER

* NEW 115kV, 2500kcmil, 1/C, XLPE CU CABLE TO BE SPLICED TO CABLE INSTALLED BY OTHERS.

115KV CABLE AND SPLICE INSTALLATION

POD15
115kV DETAILS

NATURE REVISIONS	MADE	CHK'D	REV'D

VAULT SERIAL NO.	DATE	MARK

P:\Projects\122724 - Central Waterfront\DD (drawing & design)\DWG (drawings)\03 Line (plans, profiles & details-NFO)\100% Design\ 00% Details_Misc.dwg
Jun-29-11 2:53pm

POWER ENGINEERS

0 Ø 1
IF THIS BAR DOES NOT MEASURE 1" THEN DRAWING IS NOT PLOTTED TO ORIGINAL SCALE.

APPROVED FOR ADVERTISING
NANCY LOCKE
DEPARTMENT OF FINANCE & ADMINISTRATIVE SERVICES
SEATTLE, WASHINGTON . . . . . 20 . .
BY: . . . . . .
PURCHASING & CONTRACTING SERVICES DIRECTOR

NAME OR INITIALS AND DATE
DESIGNED . GVH . . . . . .
CHECKED . PWS . . . . . .
DRAWN . LBJ . . . . . 06/29/11.
CHECKED . BJA . . . . . .

INITIALS AND DATE
REVIEWED:
DES. #### . . . CONST. #### . . .
SDOT #### . . . PROJ. MGR. ####
RECEIVED #### . . . . . .
REVISED AS BUILT #### . . . . . .

ALL WORK SHALL BE DONE IN ACCORDANCE WITH THE CITY OF SEATTLE STANDARD PLANS AND SPECIFICATIONS AND OTHER DOCUMENTS CALLED FOR IN SECTION 0-02.3 OF THE PROJECT MANUAL.

JERRY A. JOHNSON
STATE OF WASHINGTON
38882
REGISTERED
PROFESSIONAL ENGINEER

City of Seattle
Seattle Department of Transportation
ORDINANCE NO. . . . . APPROVED. . . . . .
FUND: . . . . . .
SCALE: NONE INSPECTOR'S BOOK . . . . . .

TRANSMISSION LINE RELOCATION

JOB NO. PC R/W CO
VAULT PLAN NO.
SHEET 51 OF 68

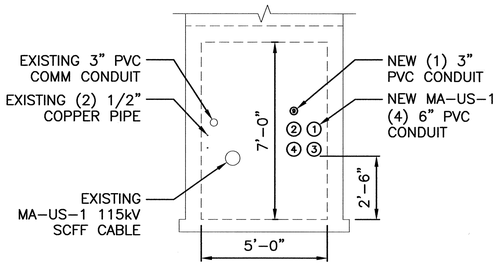

DETAIL 1
SCALE 1"=3'
TUNNEL 3, MA-US-1
LOOKING NORTH

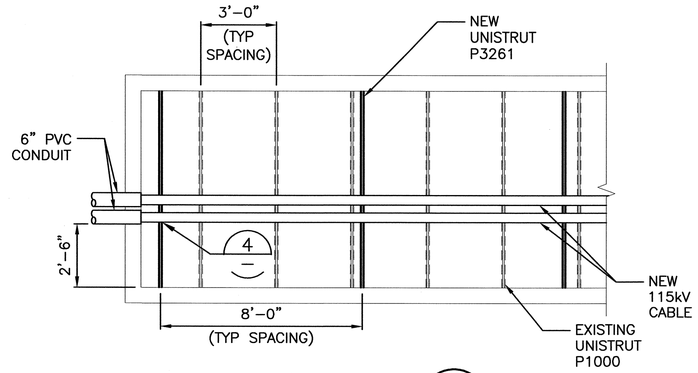

DETAIL 2
SCALE 1"=3'
UNION SUB TUNNEL 3
MA-US-1, LOOKING WEST
PROFILE VIEW

NOTES:

1. MINIMUM 8'-0" BENDING RADIUS SHALL BE USED INSIDE UNION SUBSTATION TUNNELS.
2. REFER TO DRAWING POP01 FOR PLAN AND PROFILE OF CABLE TERMINATION IN UNION SUBSTATION TUNNEL.
3. EXISTING POTHEAD RACK'S TERMINATOR MOUNTING PLATE MAY BE REUSED AND MODIFIED FOR THE NEW TERMINATOR.
4. DO NOT ATTACH CABLE TO EXISTING UNISTRUT, EXISTING UNISTRUT SUPPORT CAPACITY IS UNKNOWN.
5. CABLE FURNISH AND INSTALL SHALL BE PERFORMED BY OTHERS AND IS FOR INFORMATION ONLY.

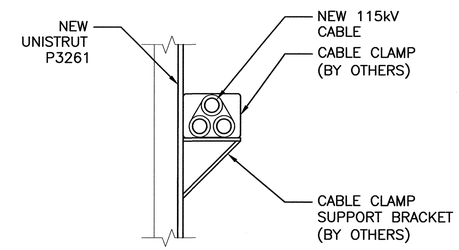

DETAIL 4
SCALE 1"=2'
UNION SUB
TYPICAL CABLE
CLAMP DETAIL

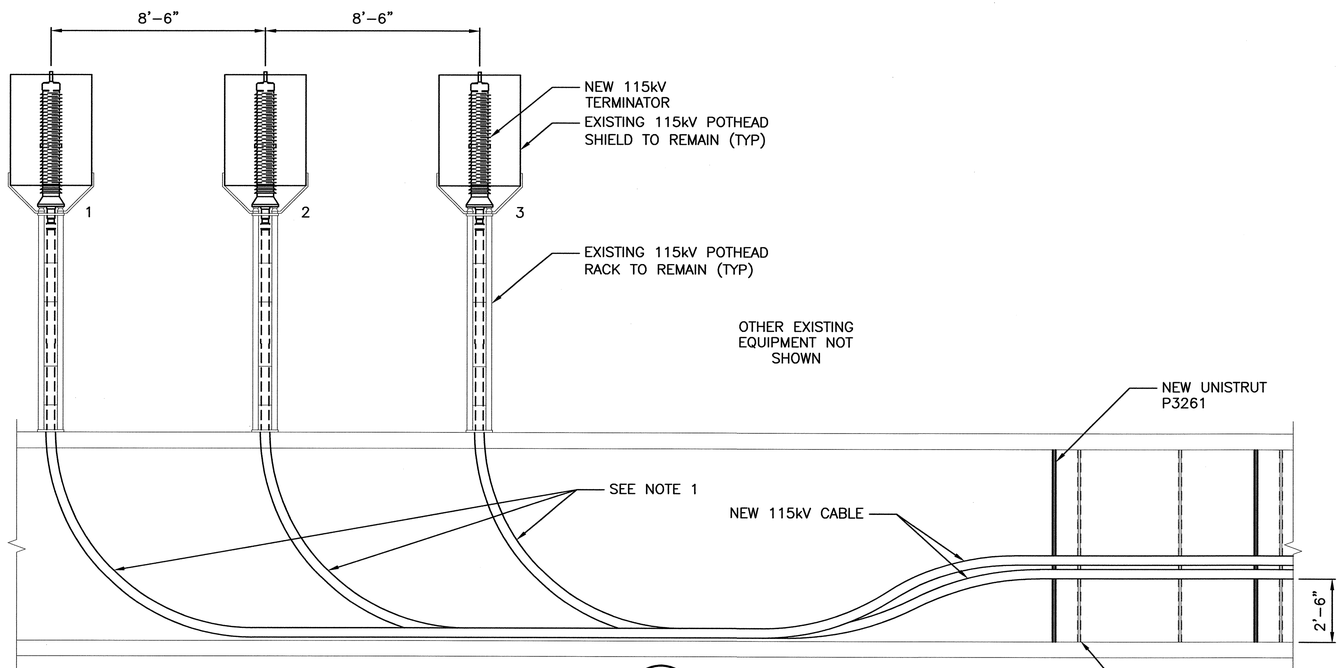

DETAIL 3
SCALE 1"=3'
UNION SUB TUNNEL 3
MA-US-1 TERMINATION
LOOKING NORTH

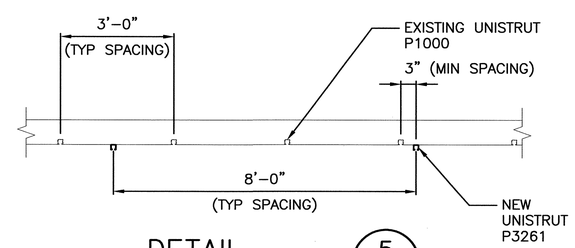

DETAIL 5
SCALE 1"=2'
UNION SUB TYPICAL WALL
PLAN VIEW

POD17
UNION SUB DETAILS

VAULT SERIAL NO.	DATE	MARK	NATURE REVISIONS	MADE	CHK'D	REV'D

P:\Projects\122724 - Central Waterfront\DD (drawing & design)\DWG (drawings)\03 Line (plans, profiles & details-NFC)\100% Design\ 00% Details_Misc.dwg
Jun-29-11 2:53pm

POWER ENGINEERS

0 Ø 1
IF THIS BAR DOES NOT MEASURE 1" THEN DRAWING IS NOT PLOTTED TO ORIGINAL SCALE.

APPROVED FOR ADVERTISING
NANCY LOCKE
DEPARTMENT OF FINANCE & ADMINISTRATIVE SERVICES
SEATTLE, WASHINGTON . . . . . 20 . .
BY: . . . . . .
PURCHASING & CONTRACTING SERVICES DIRECTOR

NAME OR INITIALS AND DATE	
DESIGNED .GVH	
CHECKED . PWS	
DRAWN . LBJ	06/29/11.
CHECKED . BJA	

INITIALS AND DATE	
REVIEWED:	
DES. #### . . .	CONST. #### . . .
SDOT #### . . .	PROJ. MGR. ####
RECEIVED ####	
REVISED AS BUILT ####	

ALL WORK SHALL BE DONE IN ACCORDANCE WITH THE CITY OF SEATTLE STANDARD PLANS AND SPECIFICATIONS AND OTHER DOCUMENTS CALLED FOR IN SECTION 0-02.3 OF THE PROJECT MANUAL.

STATE OF WASHINGTON LARRY A. JOHNSON 38192 REGISTERED PROFESSIONAL ENGINEER
30 Jun 11

City of Seattle
Seattle Department of Transportation
ORDINANCE NO. . . . . APPROVED. . . . . .
FUND: . . . . . .
SCALE: NONE INSPECTOR'S BOOK . . . . .

TRANSMISSION LINE RELOCATION

JOB NO. PC R/W CO
VAULT PLAN NO.
SHEET 53 OF 68

NOTES:

1. MINIMUM 8'–0" BENDING RADIUS SHALL BE USED INSIDE UNION SUBSTATION TUNNELS.
2. REFER TO DRAWING POP01 FOR PLAN AND PROFILE OF CABLE TERMINATION IN UNION SUBSTATION TUNNEL.
3. DO NOT ATTACH CABLE TO EXISTING UNISTRUT, EXISTING UNISTRUT SUPPORT CAPACITY IS UNKNOWN.
4. CABLE FURNISH AND INSTALL SHALL BE PERFORMED BY OTHERS AND IS FOR INFORMATION ONLY.

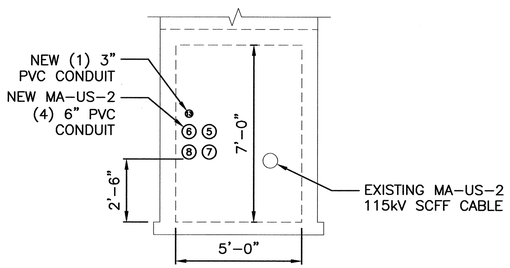

DETAIL 1
SCALE 1"=3'
TUNNEL 2, MA–US–2
LOOKING NORTH

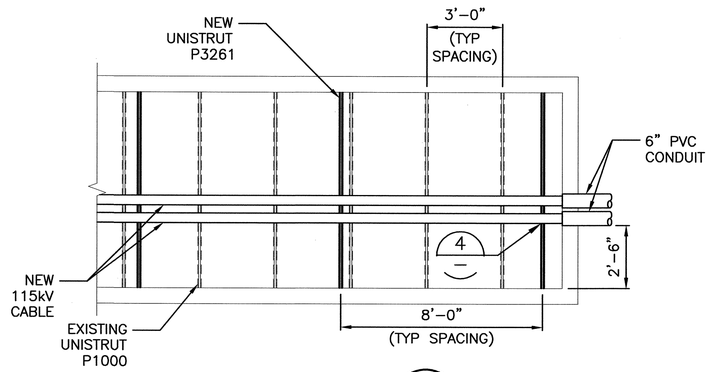

DETAIL 2
SCALE 1"=3'
UNION SUB TUNNEL 2
MA–US–2, LOOKING EAST
PROFILE VIEW

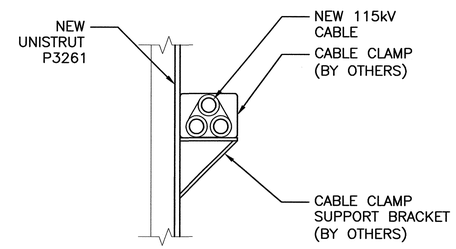

DETAIL 4
SCALE 1"=2'
UNION SUB
TYPICAL CABLE
CLAMP DETAIL

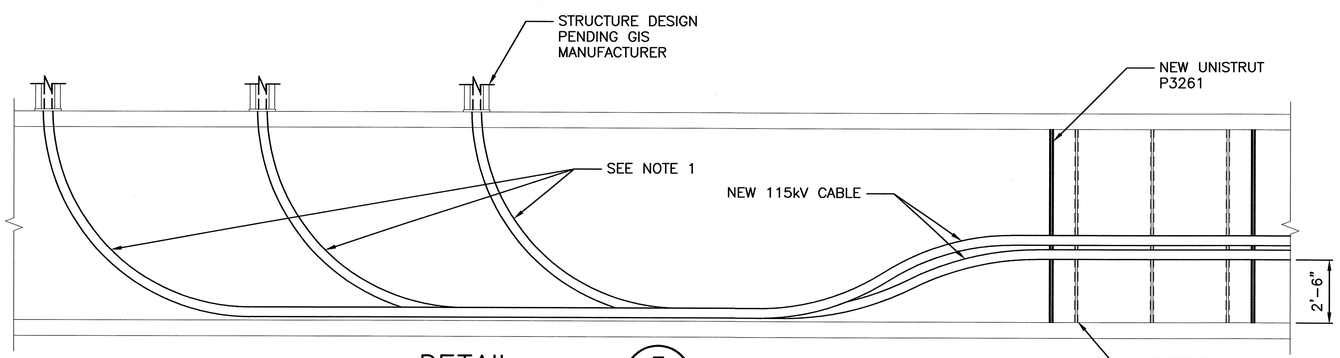

DETAIL 3
SCALE 1"=3'
UNION SUB TUNNEL 2
MA–US–2 TERMINATION
LOOKING NORTH

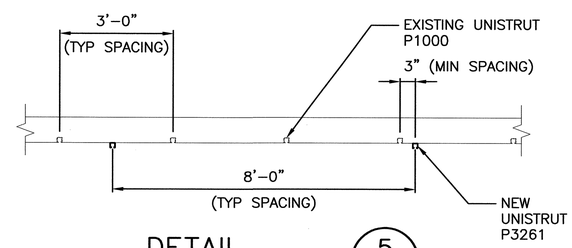

DETAIL 5
SCALE 1"=2'
UNION SUB TYPICAL WALL
PLAN VIEW

POD18
UNION SUB DETAILS

VAULT SERIAL NO.	DATE	MARK	NATURE REVISIONS	MADE	CHK'D	REV'D

P:\Projects\122724 – Central Waterfront\DD (drawing & design)\DWG (drawings)\03 Line (plans, profiles & details–NFC)\100% Design\100% Details_Misc.dwg
Jun–29–11 2:54pm

POWER ENGINEERS

0 Ø 1
IF THIS BAR DOES NOT MEASURE 1" THEN DRAWING IS NOT PLOTTED TO ORIGINAL SCALE.

APPROVED FOR ADVERTISING
NANCY LOCKE
DEPARTMENT OF FINANCE & ADMINISTRATIVE SERVICES
SEATTLE, WASHINGTON . . . . . 20 . . .
BY: . . . . . .
PURCHASING & CONTRACTING SERVICES DIRECTOR

NAME OR INITIALS AND DATE
DESIGNED .GVH . . . . . .
CHECKED . PWS . . . . . .
DRAWN . LBJ . . . . . 06/29/11.
CHECKED . BJA . . . . . .

INITIALS AND DATE
REVIEWED:
DES. #### . . . CONST. #### . . . .
SDOT #### . . . PROJ. MGR. #### .
RECEIVED #### . . . . . .
REVISED AS BUILT #### . . . . . .

ALL WORK SHALL BE DONE IN ACCORDANCE WITH THE CITY OF SEATTLE STANDARD PLANS AND SPECIFICATIONS AND OTHER DOCUMENTS CALLED FOR IN SECTION 0–02.3 OF THE PROJECT MANUAL.

JERRY A. JOHNSON
STATE OF WASHINGTON
REGISTERED PROFESSIONAL ENGINEER
50 Years 2011

City of Seattle
Seattle Department of Transportation
ORDINANCE NO. . . . . APPROVED. . . . . .
FUND: . . . . . .
SCALE: NONE INSPECTOR'S BOOK. . . . . .

TRANSMISSION LINE RELOCATION

JOB NO. PC R/W CO
VAULT PLAN NO.
SHEET 54 OF 68