# VENDOR CONTRACT

The City of Seattle
**PURCHASING SERVICES**
700 – Fifth Avenue, Suite 4112
PO Box 94687
Seattle, WA 98124

| Vendor Contract # | Date | Change Order |
|---|---|---|
| 0000002605 | 4/25/2011 | # 1 |

| Payment Terms | Freight Terms |
|---|---|
| Net 30 | Destination Prepaid & allowed |

| Buyer: | FAX | Phone: |
|---|---|---|
| Laura Kim | 206-233-5155 | 206-6840445 |

Vendor #0000194523
James E. Sauers
c/o J & K Associates
820 Kirkland Ave
Kirkland, WA 98033

Contact: Jim Sauers
Phone # 206-940-6924
Fax #: 425-827-2481
E-mail jimsauers@hotmail.com

**Ship To:**

Fleets & Facilities Department

**Bill To:**

See Attached List

James E. Sauers is awarded a contract for providing the City of Seattle Fleets & Facilities Departments with 10,000 GVWR & 14,000 GVWR Tilt Deck Trailers per base specification and options as a result of Invitation to Bid FFD-2576 dated 05/04/09. See Attachment #1 – Specifications and City of Seattle Terms and Conditions (in receipt).

Original Contract Term: 06/12/2009 through 06/11/2014 with an option to extend for one 2 year term,

Change Order #1: Issued 04/21/2011 to increase the price by 11% due to manufacture price increase by 11%.

In all other respects, this contract remains the same.

**Authorized Signature/Date**
Laura Kim 4/25/2011

# BLANKET CONTRACT

The City of Seattle
**PURCHASING SERVICES**
700 5th AVE #4112
PO BOX 94687
Seattle WA 98124-4687

| Blanket Contract # | Date | Change Order # |
|---|---|---|
| 0000002605 | 06/12/09 | |

| Payment Terms | Freight Terms |
|---|---|
| Net 30 | Destination, Prepaid & Allowed |

| Buyer: | FAX: | Phone: |
|---|---|---|
| Ginny Justiniano | 206-233-5155 | 206-233-7158 |

Vendor #: 0000194523
JAMES E. SAUERS
c/o J & K Associates
820 Kirkland Ave
Kirkland WA 98033

Contact: Jim Sauers
Phone #: 206-940-6924
Fax # 425-827-2481
Email: jimsauers@hotmail.com

**Ship To:**

Fleets & Facilities Dept.

**Bill To:**

See Attached List

**James E. Sauers** is awarded a contract for providing the City of Seattle Fleets & Facilities Departments with 10,000 GVWR & 14,000 GVWR Tilt Deck Trailers per base specification and options as a result of Invitation to Bid FFD-2576 dated 05/04/09. See Attachment #1-Specifications and City of Seattle Terms and Conditions (in receipt).

Original contract term: 06/12/2009 through 06/11/2014 with an option to extend for one 2 year term.

Orders shall be placed by Fleets & Facilities Department. Invoices shall be mailed in duplicate to the Departments Accounts Payable, per attached list. **Each invoice shall indicate Contract #0000002605.**

This contract is your NOTICE TO PROCEED.

ORIGINAL SENT
BY EMAIL ON
6/15/09
DO NOT DUPLICATE

**Authorized Signature/Date**
G. Justiniano 6/12/09

**City of Seattle**
Department of Executive Administration
Purchasing Division

## CITY OF SEATTLE INVOICE ADDRESS GUIDE

Current 1/21/09

***NOTE: Please send INVOICES to Mailing Address of Accounts Payable Section of the Ordering Department.***

| DEPARTMENT | ACCOUNTS PAYABLE CONTACT | Accounts Payable MAILING ADDRESS | PHYSICAL LOCATION | PHONE/FAX |
|---|---|---|---|---|
| Arts & Cultural Affairs, Office of | Truong Tran | PO Box 94748<br>Seattle, WA 98124-4748 | 700 5th Avenue, Suite 1766<br>Seattle, WA 98104 | 206-233-7016<br>206-684-7172 |
| City Auditor, Office of | Susan Cohen | PO Box 94729<br>Seattle, WA 98124-4729 | 700 5th Avenue, Suite 2410<br>Seattle, WA 98104 | 206-233-1093<br>206-684-0900 |
| City Light | Scott Hayes | PO Box 34023<br>Seattle, WA 98124-4023 | 700 5th Avenue, Suite 3200<br>Seattle, WA 98104 | 206-684-3563<br>206-684-3855 |
| Civil Rights, Seattle Office for | Latrice Ybarra | 810 3rd Avenue, Suite 750<br>Seattle, WA 98104-1627 | 810 3rd Avenue, Suite 750<br>Seattle, WA 98104-1627 | 206-684-4539<br>206-684-0332 |
| Executive Administration, Dept of | Becky Thacker | PO Box 94669<br>Seattle, WA 98124-4669 | 700 5th Avenue, Suite 4350<br>Seattle, WA 98104 | 206-684-0333<br>206-684-0462 |
| Information Technology, Dept of | Pamela Heilman | PO Box 94709<br>Seattle, WA 98124-4709 | 700 5th Avenue, Suite 2700<br>Seattle, WA 98104 | 206-684-4687<br>206-684-0911 |
| Neighborhoods, Dept of | Nga Nguyen | PO Box 94649<br>Seattle, WA 98124-4649 | 700 5th Avenue, Suite 1700<br>Seattle, WA 98104 | 206-615-0580<br>206-233-5142 |
| Planning & Development, Dept of | Cathy Stoltey | PO Box 34019<br>Seattle, WA 98124-4019 | 700 5th Avenue, Suite 1800<br>Seattle, WA 98104 | 206-233-7918<br>206-386-0095 |
| Economic Development, Office of | Suching Luu | PO Box 94708<br>Seattle, WA 98124-4708 | 700 5th Avenue, Suite 5752<br>Seattle, WA 98104 | 206-684-7391<br>206-684-0379 |
| Ethics & Elections Commission | Gwen Ford | PO Box 94729<br>Seattle, WA 98124-4729 | 700 5th Avenue, Suite 4010<br>Seattle, WA 98104 | 206-684-8576<br>206-684-8590 |
| Finance | Becky Thacker | PO Box 94669<br>Seattle, WA 98124-4669 | 700 5th Avenue, Suite 4350<br>Seattle, WA 98104 | 206-684-0333<br>206-684-0462 |
| Fire | Sheila Kelly | 301 2nd Avenue South<br>Seattle, WA 98104-2618 | 301 2nd Avenue South<br>Seattle, WA 98104-2618 | 206-386-1461<br>206-233-2755 |
| Fleets & Facilities | David Behrndt | PO Box 94689<br>Seattle, WA 98124-4689 | 700 5th Avenue, Suite 5200<br>Seattle, WA 98104 | 206-684-0630<br>206-684-0506 |
| Hearing Examiner, Office of | Pat Cole | PO Box 94729<br>Seattle, WA 98124-4729 | 700 5th Avenue, Suite 4000<br>Seattle, WA 98104 | 206-615-1570<br>206-684-0536 |
| Housing, Office of | Glen Byrne | PO Box 94725<br>Seattle, WA 98124-4725 | 700 5th Avenue, Suite 5700<br>Seattle, WA 98104 | 206-684-0341<br>206-233-7117 |
| Human Services | Sharon Gill | PO Box 34215<br>Seattle, WA 98124-4215 | 700 5th Avenue, Suite 5800<br>Seattle, WA 98104 | 206-684-4165<br>206-621-5036 |
| Law | Rithy Lim | PO Box 94769<br>Seattle, 98124-4769 | 600 4th Avenue, 4th Floor<br>Seattle, WA 98104-1858 | 206-233-0095<br>206-684-8284 |
| Legislative | Eric Ishino | PO Box 94728<br>Seattle, WA 98124-4728 | 600 4th Avenue, 3rd Floor<br>Seattle, WA 98104 | 206-684-8141<br>206-684-8587 |
| Library, Seattle Public | Dean Nishimura | 1000 4th Avenue<br>Seattle, WA 98104-1109 | 1000 4th Avenue<br>Seattle, WA 98104-1109 | 206-386-4109<br>206-386-4108 |
| Municipal Court of Seattle | Cesar Ramos | PO Box 34987<br>Seattle, WA 98124-4987 | 600 5th Avenue<br>Seattle, WA 98104 | 206-684-5659<br>206-684-8193 |
| Policy & Management, Office of | Julie Tobin | PO Box 94745<br>Seattle, WA 98124-4745 | 600 4th Avenue, 6th Floor<br>Seattle, WA 98104 | 206-684-8859<br>206-233-0085 |
| Parks & Recreation | Connie McClure | 800 Maynard Avenue South, 3rd Floor<br>Seattle, WA 98134 | 800 Maynard Ave South, 2nd Floor<br>Seattle, WA 98134 | 206-684-7364<br>206-684-7285 |
| Personnel | Bobby Lane | PO Box 34028<br>Seattle, WA 98124-4028 | 700 5th Avenue, Suite 5500<br>Seattle, WA 98104 | 206-684-7919<br>206-684-7751 |
| Police | Esmat Bahandori | PO Box 34986<br>Seattle, WA 98124-4986 | 610 Fifth Avenue, 5th Floor<br>Seattle, WA 98104 | 206-684-5468<br>206-233-7207 |
| Police Pension | Elaine Danielson | PO Box 94729<br>Seattle, WA 98124-4729 | 700 5th Avenue, Suite1862<br>Seattle, WA 98104 | 206-386-1286<br>206-386-9075 |
| Public Safety Civil Service Commission | Mary Effertz | PO Box 94729<br>Seattle, WA 98124-4729 | 700 5th Avenue, Suite1670<br>Seattle, WA 98104 | 206-233-7118<br>206-684-0755 |
| Retirement System | Jean LeMaster | 720 3rd Avenue, Suite 1000<br>Seattle, WA 98104-1829 | 720 3rd Ave, Suite 1000<br>Seattle, WA 98104-1829 | 206-615-1434<br>206-386-1506 |
| Seattle Center | Vincent DiGianni | 305 Harrison<br>Seattle, WA 98109 | 305 Harrison<br>Seattle, WA 98109 | 206-684-7145<br>206-684-7342 |
| Seattle Public Utilities | Kathleen Organ | PO Box 34018<br>Seattle, WA 98124-4018 | 700 5th Avenue, Suite 4900<br>Seattle, WA 98104 | 206-233-7169<br>206-386-4033 |
| Transportation, Seattle Dept of | Don Padgett | PO Box 34996<br>Seattle, WA 98124-4996 | 800 5th Avenue, Suite 3000<br>Seattle, WA 98104 | 206-386-4630<br>206-233-3887 |

VENDOR CONTRACT # 0000002605
ATTACHMENT # 1

# SPECIFICATION for: Nine(9) or more Utility Tilt Deck Trailers

Projects: 0675A
Replacing: Vehicles: 5540A, 5542, 5958, 5960, 5961, 5962, 5963 – Parks, 5634 and ADD0714 - SDOT

Specification Prepared by: Ernie Baker, Sr. Mechanical Engineer
City of Seattle – Fleets and Facilities Department
Fleet Services Division
700 Fifth Ave, Suite 5200
PO Box 94689
Seattle, Washington 98124-4689
Phone: (206) 684-0141
Fax: (206) 684-0656
E-mail: Ernie.Baker@seattle.gov

## • IMPORTANT •

Complete response to each item is required, responses must be written on this form. Attach any information necessary to explain or clarify your bid. Bids failing to include specific responses may be rejected. Evaluation will be based on compliance with specifications. Non-compliant items must be clearly indicated. Any mandatory items (marked "shall", "minimum" or "maximum") must be in compliance or the bid will be rejected. Acceptable abbreviations for use on this form: Standard = (STD), Not Available = (N/A), No Charge = (NC), Comply = (CPL). All items described by attachments or addendum should be referenced on the submitted bid in proper numerical sequence. You are encouraged to list and price any options that you feel would enhance the use of this item and/or would be desirable. Option prices will not be considered as part of the pricing evaluation.

| ITEMS REQUIRED | RESPONSE<br>Standard = STD<br>Not Available = N/A<br>No Charge = NC<br>Comply = CPL |
|---|---|
| **SCOPE:** | |
| It is the intent of these specifications to describe a variety of full tilt deck, deck between the wheels, utility trailers to establish a multi year contract for their purchase. The trailers will be used by various departments in the City of Seattle. The spec is divided into sections based on the GVWR for each size the City is seeking to establish a contract for. The City has an immediate need for seven 7,000 lb. GVWR trailers described herein to carry equipment like Toro 4000D mowers between parks in the City and two 10,000 lb. GVWR trailers to transport skid steer and similar equipment for SDOT. | CPL |

| | |
|---|---|
| **GLOBAL REQUIREMENTS:** | |
| 1. Bidders are encouraged to offer options in their bid. Cost differences and alternatives should be detailed and completely defined in the options section of the bid. | CPL |
| 2. A performance demonstration may be required prior to bid award. | CPL |

| ITEMS REQUIRED | RESPONSE<br>Standard = STD<br>Not Available = N/A<br>No Charge = NC<br>Comply = CPL |
|---|---|
| 3. All units shall be new, unused, up-to-date models and shall be delivered ready for service. Each unit shall include all inspection coupons and warranty identification cards furnished to general trade. All extended warranty months and miles shall be clearly noted on a placard installed on the trailer. | CPL |
| 4. All components and accessories cataloged as standard, unless superseded by these specifications, shall be provided with the unit. | CPL |
| 5. In the event of a conflict between the specifications requirements and federal or state laws, the federal or state laws shall prevail. | CPL |
| 6. Hose, wire and tube routing shall not impede normal maintenance and adjustment of the unit. Hoses, wires and tubes shall be securely and neatly positioned and secured with non-corrosive clamps. | CPL |
| 7. On all items that the bidder is requesting Sr. Engineer equivalent approval, the part number, model, description and performance data (if applicable) of the alternative must be provided. The term "Sr. Engineer" means the Fleets and Facilities Department, Fleet Services Division, Senior Mechanical Engineer, whose name appears on the first page of this specification, or alternately, the Fleet Services Fleet Administration Manager. All such approvals shall be in writing. | CPL |
| 8 Vendor logos if applied shall be no larger than 4" x 6" in size and there shall be no more than 4. | CPL |
| 9 If special tools, gauges, adapters, etc., are required for normal maintenance, adjustment and/or inspection of the unit, they shall be identified and provided with the unit. | CPL |
| 10 Vendor is required to have been in the business of selling and repairing trailers or related equipment for a minimum of 5 years. | CPL |
| 11 Inspection of bidder's parts and service facility may be required before award of bid is made. | CPL |
| **Structure:** | |
| 1. Trailer shall be street legal and conform to Washington State and Federal code. | CPL |
| 2. The tilt function shall be performed by a cushion cylinder(s). Trailer shall tilt by one person with an effort not to exceed 175 lbs. Once in the tilted position the trailer deck must stay in contact with the ground once the operator is no longer applying force to the rear of the deck. | CPL |
| 3. Minimum 14 GA steel fenders, full enclosure including deck side. | CPL |
| 4. A Grip Strut or diamond plate step is to be located toward the front on driver side. The step may be tied into the front of the fender. | CPL |
| 5. Full width steel dash, 4" high minimum. | CPL |
| 6. In tongue mounted chain tray large enough for misc. tools and tie down chains. The chain tray is to be at least eight inches deep, have | CPL |

| ITEMS REQUIRED | RESPONSE<br>Standard = STD<br>Not Available = N/A<br>No Charge = NC<br>Comply = CPL |
|---|---|
| a solid metal bottom with drain holes and have a lockable lid. | |
| 7. Equipped with 3" adjustable height lunette eye (pintle) mounted at approximately 24". | CPL |
| 8. The lunette eye mount and tongue jack in the up position are to be mounted as high as possible to minimize the possibility of damage from hitting the ground. | CPL |
| 9. Equipped with two safety chains, grade 70 or higher, minimum 1/4" cross section each, with OSHA snap hooks. Per state law, each chain and attachment is to be rated at a longitudinal tensile strength at or above the GVWR of the trailer. Chains must be long enough to cross under the tongue and reach the tow vehicle. Each snap hook and chain attachment means to be rated at or above the strength of the chains. No welding is allowed on any safety chain links after the original manufacture of the chain including welding a link to the trailer. | CPL |
| 10. State law requires the rear of the fenders to extend down below the centerline of the wheels. Rubber mud flaps may be installed to meet this requirement. If used, recycled rubber flaps are preferred. | CPL |
| 11. Four (4) chock blocks total and integral holders, two per side. Recycled rubber blocks are preferred. Chock block holder location to be determined at the preconstruction meeting. | CPL |
| 12. Water tight registration box or tube on trailer tongue. | CPL |
| 13. 7000 GVWR and 10,000 GVWR trailers are to have a tongue and main frame rails of 5" structural channel and crossmembers of 3" channel at no more than 24" centers or Sr. Engineer approved equivalent. 14,000 GVWR trailers are to have a tongue and main frame rails of 6" structural channel and crossmembers of 3" channel at no more than 16" centers or Sr. Engineer approved equivalent. | CPL |
| **DECKING:** | |
| 1. The decking is to be a minimum 2" x 6" nominal hardwood , fasten with minimum 5/16" self tapping deck screws. Minimum one screw per board per crossmember. | CPL |
| 2. Outside deck members to be half width or wider. | CPL |
| 3. Wood decking is to have two traction aid treads installed on deck, expanded metal mesh or Sr. Engineer approved equivalent, approximately 24" wide and one half the trailer deck length. The traction aid is to have a border to keep the edges from curling up. The treads and border are to be galvanized, sprayed with Rhino Lining or Sr. Engineer approved equivalent. | CPL |
| 4. Deck to have positive travel latch, safety pin and stainless steel cable tether or Sr. Engineer approved equivalent. | CPL |
| 5. Rear of deck shall have a tapered approach plate that is flush with the top of the deck and forms a ramp to the ground in the tilted position | CPL |

| ITEMS REQUIRED | RESPONSE<br>Standard = STD<br>Not Available = N/A<br>No Charge = NC<br>Comply = CPL |
|---|---|
| for easy loading and unloading. | |
| 6. The approach plate shall have traction aids, minimum ½" x ½" x 24" square stock, welded laterally at 4" – 5" spacing directly behind the treads in item 3. | CPL |
| **AXLES, BRAKES, WHEELS AND TIRES:** | |
| 1. Two "Torflex" axles, or Sr. Engineer approved equivalent. Each axle shall be rated at one half the trailer GVWR. | CPL |
| 2. Each axle will be equipped with electrically activated brakes rated for the trailer GVWR. | CPL |
| 3. A tongue mounted safety breakaway system is required. Safety breakaway system shall include a dedicated battery. No accessories may be hooked up to this battery. | CPL |
| 4. Wheels are to be steel stud piloted and appropriately rated for GVWR of trailer. | CPL |
| 5. Tires, minimum, four (4) Goodyear or Sr. Engineer approved equivalent tires. Each set of tires are to be rated at or above the GAWR of the axle. | CPL |
| 6. The trailer shall be equipped with a hub odometer. | CPL |
| **WELDING PROCESS AND CONTROL:** | |
| 1. All welds shall meet AWS standards for structural steel joints. | CPL |
| 2. Porosity, penetration leg and throat sizes, heat affected zone, and splatter clean up will meet or exceed AWS requirements. | CPL |
| 3. All rough edges are to be ground smooth before painting. | CPL |
| 4. Welding inspection is required by FFD engineer or a designated representative prior to acceptance of the trailers. | CPL |
| **ELECTRICAL REQUIREMENTS:** | |
| **General:** | |
| 1. The breakaway battery is to be a maintenance free lead acid with a minimum of 350 CCA. The battery is to be protected inside a marine enclosure or weather resistant storage box with a lockable cover or strap. The battery is to be secured in place to prevent excessive movement. Exact location of the battery will be determined at the preconstruction meeting. | CPL |
| 2. The trailer battery will have the capability of being charged when the chassis engine is running via trailer electrical connectors. | CPL |
| 3. Wiring installation shall include one (1) SAE J 560, 7-pin trailer plug-in connector and one (1) separate ISO 3731, yellow 7-pin trailer plug-in connector wired to the schematic attached at the end of this specification. | CPL |

| ITEMS REQUIRED | RESPONSE<br>Standard = STD<br>Not Available = N/A<br>No Charge = NC<br>Comply = CPL |
|---|---|
| 4. All wiring connections will be made at a junction box, lamp housing, appliance or through a weather proof connector such as Deutsch or Weather Pack connectors only. No in-line splices are acceptable. | CPL |
| 5. All wiring shall be color coded and/or numerically etched a minimum of every twelve (12) inches. | CPL |
| 6. SAE standards for wire size and run length vs. load are to be followed. | CPL |
| 7. All exposed wiring harnesses shall be in non-metallic liquid tight conduit, Hubbell / Kellems PVC jacketed loom, or Sr. Engineer approved equivalent. The Truck-Lite series 50 harness is exempt from this requirement. | CPL |
| 8. Wire or wire bundles shall be routed free of chafing and abrasions and shall be supported using industrial grade, non-corrosive, insulated clamps. Clamp spacing should be 12-inches | CPL |
| 9. Wires penetrating through bulkheads that are not inside conduit, must be protected by Truck-Lite nylon compression fittings and bushing or equivalent. | CPL |
| 10. Any wiring holes that have been flame cut or have not been de-burred will be rejected and returned to the dealer for repair. | CPL |
| **Dealer added Wiring:** | |
| 1. Any dealer/vendor added electrical runs shall use the following mil-spec wire: "Alpha" part number 7046, MIL-W-16878D or Sr. Engineer approved equivalent. MIL-W-16878D Type D is a multi-strand, tinned copper wire with a Polyolefin insulation rated at 125 degrees Celsius and 600 volts. All wiring circuits other than the Truck-Lite lighting systems described elsewhere in these specifications shall use this type of wire. | CPL |
| 2. WIRE TERMINATIONS: All wiring circuits using the MIL-W-16878D Type D wire shall utilize terminals conforming to MIL-T-7928, MS25036, Type II, Class 2 (insulated with an insulation grip). | CPL |
| a. Added runs shall use dual crimped (insulator crimp and conductor crimp), using the crimping tool designed for the specific wire. | CPL |
| b. Ring terminals with proper diameter mounting screws shall be used on all MIL-Spec wires. Spade or hook terminals are unacceptable. | CPL |
| c. Inexpensive, plastic type splices known as "Scotch Locks" or equal will be aggressively rejected and wires using them will be rejected and replaced at Vendor's expense. **DO NOT USE THESE DEVICES.** | CPL |
| **Lighting:** | |
| 1. All lights and reflectors required by DOT, ICC, FMVSS 108 standards and Chapter 46.37 of the Revised Code of Washington shall be furnished. Truck-Lite or Sr. Engineer approved equivalent, sealed lighting system installation per the following description. | CPL |
| 2. Installation shall include Truck-Lite series 50 wiring harness with Truck-Lite 50400 junction box(s) | CPL |

| ITEMS REQUIRED | RESPONSE<br>Standard = STD<br>Not Available = N/A<br>No Charge = NC<br>Comply = CPL |
|---|---|
| 3. Rear Stop/Tail/Turn lights, quantity two (2), shall be red LED Truck-Lite, Diamond Shell, 4" Super 44 series. Oval Truck-Lite lights may be substituted if they provide a better fit. | CPL |
| 4. All rear STT lights shall be flange mounted with tamper proof hardware and protected against damage. | CPL |
| 5. One (1) LED license plate light Truck-Lite LED model 15. State law prohibits white light visible from the rear of the trailer during normal operation. The license plate light must be oriented to meet this requirement. | CPL |
| 6. All clearance lights are to be Truck-Lite LED Model 21 Diamond shell and shall be hard flange mounted. | CPL |
| 7. Rear identification lights Truck-Lite model 35 identification lightbar. | CPL |
| 8. Front, rear, and side reflective striping required. Striping shall be "3M" reflective marking or Sr. Engineer approved equivalent, conforming to DOT requirements. | CPL |
| **PAINT:** | |
| 1. The metal surface is to be cleaned of scale, rust, lubricants and other contaminants by an industry approved products such as acidic or alkaline cleaners. Following cleaning, prime with a high quality metal etching primer or Sr. Engineer approved equivalent. | CPL |
| 2. The top coat shall be Dupont Imron 5000 Polyurethane or Sr. Engineer approved equivalent. Any exposed bare metal or metal with visible rust will be rejected and returned to the dealer to be repainted. | CPL |
| 3. Trailer color to be the manufacturer's standard. | CPL |
| 4. Wheels to be painted black, all surfaces. | CPL |
| **WARRANTY:** | |
| 1. Bidder shall have a full time, complete local (within 50 mile radius of FFD shops located at 805 South Charles Street, Seattle, Washington 98134) parts and service facility offering factory authorized service and a parts supply adequate to perform complete warranty repairs. | CPL |
| 2. Manufacturer's standard warranty shall commence the date the trailer is placed in service, not delivery date, as documented by the City of Seattle. | CPL |
| 3. State or attach warranty offered. | One Year |
| 4. Warranty service, extended warranty and recall work must be performed by seller or seller's service facility, who must accept responsibility for all transportation. Seller must respond to a call for warranty service within 24 hours. All costs of warranty repair and service shall be borne by the seller. | CPL |
| 5. Minor warranty repairs than can be done in one (1) hour or less shall be performed by the City of Seattle FFD repair shop. In the event a covered repair will take more than one (1) hour, the City of Seattle | CPL |

| ITEMS REQUIRED | RESPONSE<br>Standard = STD<br>Not Available = N/A<br>No Charge = NC<br>Comply = CPL |
|---|---|
| FFD shop will call vendors assigned contact person for repair authorization or have the vendor pick up the trailer for repairs. All warranty repairs completed by The City of Seattle FFD shop will be reimbursed by the vendor at the current shop rate of $98.00 per hour for 2009. The City of Seattle FFD shop will only bill for actual time spent. There will be no minimum time charge on any repair. All warranty transportation will be provided by the winning vendor. | |
| 6. Successful bidder is to fill out attached **EQUIPMENT DATA ENTRY FORM.** | CPL |
| **PRECONSTRUCTION MEETING:** | |
| After bid award and prior to beginning construction, vendor shall meet with the City of Seattle representatives for the purpose of reviewing construction techniques, clarifying any specification related questions, agreeing on general layout of components and review scope of work, options chosen and the manufacturing schedule. | CPL |

| **DELIVERY REQUIREMENTS** | |
|---|---|
| 1. All equipment and components necessary for operation and normally supplied shall be furnished, even if not called out in the specifications. | CPL |
| 2. Four (4) complete sets of keys for all locks shall be provided with the unit. | CPL |
| 3. The equipment shall have full dealer preparation and be ready for service when delivered. | CPL |
| 4. The trailer(s) shall be delivered with title application and MSO made out per current State of Washington code. Enter legal and registered owner as:<br>City of Seattle - FFD<br>700 Fifth Ave, Suite 5200<br>PO Box 94689<br>Seattle, WA 98124-4689 | CPL |
| 5. Equipment shall be delivered to:<br>FFD Shops<br>805 South Charles Street<br>Seattle, WA 98134<br>Attn: Truck Shop SOS<br>Phone: 206-386-1153 | CPL |
| 6. City Prompt Payment Discount: State Prompt Discount Terms. Discount terms of 10 or more days will be considered in bid evaluation. | 0 % 30 days; Net 100% |
| 7. The City of Seattle has entered into Interlocal Agreements with other governmental agencies pursuant to RCW 39.34, in lieu of those agencies conducting a separate competitive bid. Does Vendor agree | Yes: XX No: _____ |

| ITEMS REQUIRED | RESPONSE<br>Standard = STD<br>Not Available = N/A<br>No Charge = NC<br>Comply = CPL |
|---|---|
| to provide this product or service to such agencies? | |
| 8. Businesses located and licensed within the Seattle City limits are eligible for Seattle tax consideration for purposes of calculation of low bid. This shall be equivalent to a reduction of the cost for purposes of bid evaluation only, of 0.030. | Yes: _____ No: X |

**7000 GVWR Trailer:**

| BASIC DIMENSIONS AND WEIGHT: | |
|---|---|
| 1. Trailer is to be a two axle, full tilt deck trailer with deck between wheel wells. | CPL |
| 2. GVWR 7,000 lbs. minimum. GVWR is to be based on 10% to 15% of the total weight on the tongue. State GVWR. | CPL<br>9,950 |
| 3. Payload capacity 4,100 lbs. minimum. State payload capacity. | CPL 7,290 |
| 4. Maximum overall width shall be 8' 6" (102"). | CPL |
| 5. Deck length is to be 12' to 14'. State deck length. | 16' 5" |
| 6. Deck height is to be as low as possible with a 26" maximum. State deck height. | CPL 26" |
| 7. Deck width inside wheel wells shall be 81" minimum. This requirement is for mower track clearance. State inside width. | CPL 82.5" |
| 8. Load angle 13 degrees maximum. State load angle. | CPL 10° |
| 9. Height from the top of the deck to the top of the fender well shall be 8-1/2" maximum. This requirement is for clearance of the mower deck. State the height from the deck to the top of the fender. | CPL 8.5" |
| **STRUCTURE:** | |
| 1. Minimum 5,000 lb. capacity, manual drop leg tongue jack with sand plate. | CPL |
| 2. Install ten "D" rings, 1/2" weld on forged lashing rings or Sr. Engineer approved equivalent. Two "D" rings will be mounted next to the headboard approximately 12" inboard from each side. The remaining "D" rings will be mounted down each side at approximately 2', 4', 7-1/2' and 11' from the headboard. D rings are to be welded to the trailer frame. | CPL |
| 3. Tires shall be rated at or above 50% of the GAWR. State tire size offered and load rating in pounds. | CPL 225/75R 15<br>2540 lbs/tire |

**10,000 GVWR Trailer:**

| BASIC DIMENSIONS AND WEIGHT: | |
|---|---|
| 1. Trailer is to be a two axle, full tilt deck trailer with deck between wheel wells. | CPL |
| 2. GVWR 9,900 lbs. minimum. GVWR is to be based on 10% to 15% | CPL 9,950 |

| ITEMS REQUIRED | RESPONSE<br>Standard = STD<br>Not Available = N/A<br>No Charge = NC<br>Comply = CPL |
|---|---|
| of the total weight on the tongue. State GVWR. | |
| 3. Payload capacity 7,000 lbs. minimum. State payload capacity. | CPL 7,290 |
| 4. Maximum overall width shall be 8' 6" (102"). | CPL |
| 5. Deck length is to be 15' to 17'. State deck length. | CPL 16' 5" |
| 6. Deck height is to be as low as possible with a 28" maximum. State deck height. | CPL 28" |
| 7. Deck width inside wheel wells shall be 81" minimum. State inside width. | CPL 82.5" |
| 8. Load angle 14 degrees maximum. State load angle. | CPL 10° |
| **STRUCTURE:** | |
| 1. Minimum 7,000 lb. capacity, manual drop leg tongue jack with sand plate. | CPL |
| 2. Install ten "D" rings, 1/2" weld on forged lashing rings or Sr. Engineer approved equivalent. The exact location to be determined at the preconstruction meeting. D rings are to be welded to the trailer frame. | CPL |
| 3. Tires shall be rated at or above 50% of the GAWR. State tire size offered and load rating in pounds. | CPL 225/75R 15<br>2540 lbs./tire |

**14,000 GVWR Trailer:**

| **BASIC DIMENSIONS AND WEIGHT:** | |
|---|---|
| 1. Trailer is to be a two axle, full tilt deck trailer with deck between wheel wells. | CPL |
| 2. GVWR 13,800 lbs. minimum. GVWR is to be based on 10% to 15% of the total weight on the tongue. State GVWR. | CPL 14,000 |
| 3. Payload capacity 10,000 lbs. minimum. State payload capacity. | CPL 11,300 lbs. |
| 4. Maximum overall width shall be 8' 6" (102"). | CPL |
| 5. Deck length is to be 15' to 17'. State deck length. | CPL 16' 5" |
| 6. Deck height is to be as low as possible with a 28" maximum. State deck height. | CPL 28" |
| 7. Deck width inside wheel wells shall be 81" minimum. State inside width. | CPL 82.5" |
| 8. Load angle 14 degrees maximum. State load angle. | CPL 11° |
| **STRUCTURE:** | |
| 1. Minimum 10,000 lb. capacity, manual drop leg tongue jack with sand plate. | CPL |
| 2. Install ten "D" rings, 1/2" weld on forged lashing rings or Sr. Engineer approved equivalent. The exact location to be determined at the preconstruction meeting. D rings are to be welded to the trailer | CPL |

| ITEMS REQUIRED | RESPONSE<br>Standard = STD<br>Not Available = N/A<br>No Charge = NC<br>Comply = CPL |
|---|---|
| frame. | |
| 3. Tires shall be rated at or above 50% of the GAWR. State tire size offered and load rating in pounds. | CPL 235/80 R 16<br>3520 lbs./tire |

**EXTENDED USE CONTRACT BEYOND THE INITIAL MODEL YEAR OFFERED:**

| | |
|---|---|
| 1. Extended use of this specification and any subsequent contract resulting from this bid is desired. | CPL |
| 2. Any resultant contract may be expanded for future models and model years. | CPL |

**OPTIONS (Option prices are not included in price evaluation):**

| | |
|---|---|
| 1. Quote the price for installing a "Rumber" deck in lieu of the wood and expanded metal deck specified. | $1526.00 |
| 2. Quote price to deduct the chain tray. | N/C |
| 3. Quote price and model number for alternate deck lengths in the utility configuration. | (4+16) 4' stationary deck on any model add $2,200.00 |
| 4. Quote price to install Rhino Lining to the inside of the chain tray. | $200.00 |
| 5. Quote any options that would be a benefit to the City of Seattle which have been omitted form this specification. It is highly recommended that the bidder list all options available from manufacturer. | See attached. |

****** IMPORTANT ******

The manufacturer's local representative must print the representative's firm name, address, phone number and the VIN number on all written warranty statements and/or manuals. VIN numbers furnished must match the respective item numbers on the contracts. Additionally, all such warranty instruments must be complete with all manufacturer/dealer responses contained therein (typed or neatly printed in ink, no exceptions) before acceptance of the vehicle/equipment will be made.

## 10,000 GVWR Trailer:

**UNIT PRICE PER BASIC SPECIFICATIONS NOT INCLUDING WA STATE SALES TAX:**

$8,382.00 ea unit

**MANUFACTURER** Gem State Manufacturing **MODEL** TrailMax model, TT10

**ESTIMATED DELIVERY:** 90 Days ARO

| ITEMS REQUIRED | RESPONSE<br>Standard = STD<br>Not Available = N/A<br>No Charge = NC<br>Comply = CPL |
|---|---|

## 14,000 GVWR Trailer:

**UNIT PRICE PER BASIC SPECIFICATIONS NOT INCLUDING WA STATE SALES TAX:**

$8,449.00.00

**MANUFACTURER** Gem State Mfg. **MODEL** TrailMax model TT12

**ESTIMATED DELIVERY:** 90 Days ARO

**COMPANY** J&K ASSOCIATES (Name) 206-940-6929 (Phone)

**NAME** Jim Sauers (Print) Owner (Title)

**PHONE** 206-940-6924 **EMAIL:** jimsauers@hotmail.com

I have read and understand the above specifications

**SIGNATURE** _____ 5-18-2009 (Date)

TRAILMAX®

*Quality Trailers From*
*Gem State Manufacturing, Inc.*

## List of Options & Accessories for model T-10-UT (Electric)

| | |
|---|---|
| Oak Deck | 579.00 |
| Steel Deck | 1,152.00 |
| Rubber Deck | 1,526.00 |
| Extra D-Rings (Each) | 34.00 |
| Belt Winches (Each) | 101.00 |
| 2" x 4" Stake Pockets (Each) | 29.00 |
| 15" Spare Tire | 148.00 |
| 16" Tire Upgrade | 314.00 |
| Spare Tire Carrier | 288.00 |
| LED Lights | 155.00 |
| Lunette Eye | 61.00 |
| Dual Tail Lights | 156.00 |
| Custom Detail | 159.00 |
| Custom Paint | 0.01 |

(X) If you would like to add some additional Options & Accessories to your trailer, just check next to each item. If you wish to see a new Sales Proposal, we would be glad to produce one. Otherwise we will add the checked items to your Confirmation after signing the Sales Proposal

Note: Approximate delivery of trailer subject to change and may vary depending on the items added.

TRAILMAX®

*Quality Trailers From*
*Gem State Manufacturing, Inc.*

## List of Options & Accessories for model T-12-UT (Electric)

| | |
|---|---|
| Oak Deck | 579.00 |
| Steel Deck | 1,152.00 |
| Rubber Deck | 1,526.00 |
| Extra D-Rings (Each) | 34.00 |
| Belt Winches (Each) | 101.00 |
| 2" x 4" Stake Pockets (Each) | 29.00 |
| 16" Spare Tire | 247.00 |
| Spare Tire Carrier | 288.00 |
| LED Lights | 155.00 |
| Lunette Eye | 61.00 |
| Dual Tail Lights | 156.00 |
| Custom Detail | 159.00 |
| Custom Paint | 0.01 |

(X) If you would like to add some additional Options & Accessories to your trailer, just check next to each item. If you wish to see a new Sales Proposal, we would be glad to produce one. Otherwise we will add the checked items to your Confirmation after signing the Sales Proposal

Note: Approximate delivery of trailer subject to change and may vary depending on the items added.

TRAILMAX®

*Utility Specification Sheet*

# Model ~~T-10-UT~~ TT-10

**Equipped with: electric brakes**

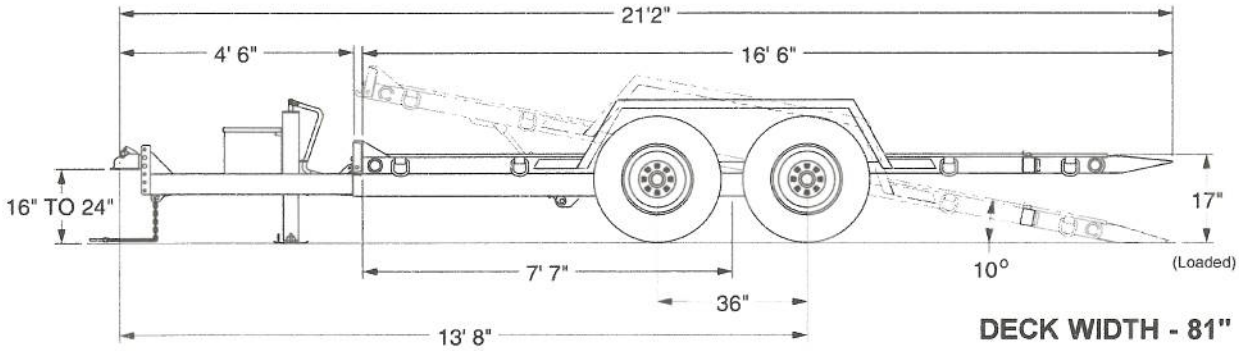


**DECK WIDTH - 81"**

**Gross Vehicle Weight Rating (G.V.W.R.) ---------- 9,950 lbs.**
**Trailer Weight ---------- 2,660 lbs.**
**Capacity @ 65 MPH (Uniformly Distributed) ---------- 7,290 lbs.**

## FEATURES **(All tiltbed decks can be tilted by one person)**

**Hitch-** 2 5/16" ball coupler, adjustable for various heights
**Jack-** 10,000 lb. capacity with drop foot
**Safety Chains-** 2 each 1/4" x 30" Grade 70 high test cadmium plated with slip hooks and safety latches
**Deck Latch-** Over-center type with tension adjustment and safety pin
**Cushion Cylinder-** 3" x 8" with internal metered flow to cushion loading and unloading
**Load securement-** 8 each (4 per side) 5/8" D-ring type
**Axles-** 2 each ~~7,000 lb. capacity each~~ 6,000 lb. capacity each
**Hubs-** 6 on 5.5 bolt circle with 1/2" cone type lug nuts
**Brakes-** 12" x 2" electric brakes both axles with 12 volt sealed breakaway system
**Suspension-** Rubber torsion
**Wheels-** 15" x 6.00" 6 hole disc type 5.5 bolt circle
**Tires-** 225/75R 15 radial load range D
**Electrical-** Trucklite modular system with rubber isolated, sealed beam lighting, protected in tube construction
**Decking-** 2" rough surface No. 1 grade Fir with fasteners at all cross members
**Paint-** Metal acid etched and phosphatized, epoxy primer coat and polyurethane top coat for a durable finish
**Tool Box-** In tongue area

## CONSTRUCTION

**Main Frame** ---------- 1/4" Formed Channel
**Tongue Members** ---------- 5" x 2" x 3/16" Tube - ASTM A500B
**Deck Cross Members** ---------- 2 1/2" x 1 1/2" x 1/8" Tube - ASTM A500B
**Deck Perimeter Rails** ---------- 4 " x 3" x 1/4" Tube - ASTM A500B

Engineered with top quality high tensile steel tubular frame and cross members to minimize excess frame flex to provide a more stable and safe load.

*All specifications subject to change without notice*


*Quality Trailers From Gem State Manufacturing, Inc.*
P.O. Box 987 • Caldwell • Idaho • 83606 • 1-800-447-0213 • (208) 455-7551 • Fax: (208) 455-7554


**" For the Long Haul"**

TRAILMAX®

*Utility Specification Sheet*

# Model ~~T-12-UT~~ TT-12

**Equipped with: electric brakes**

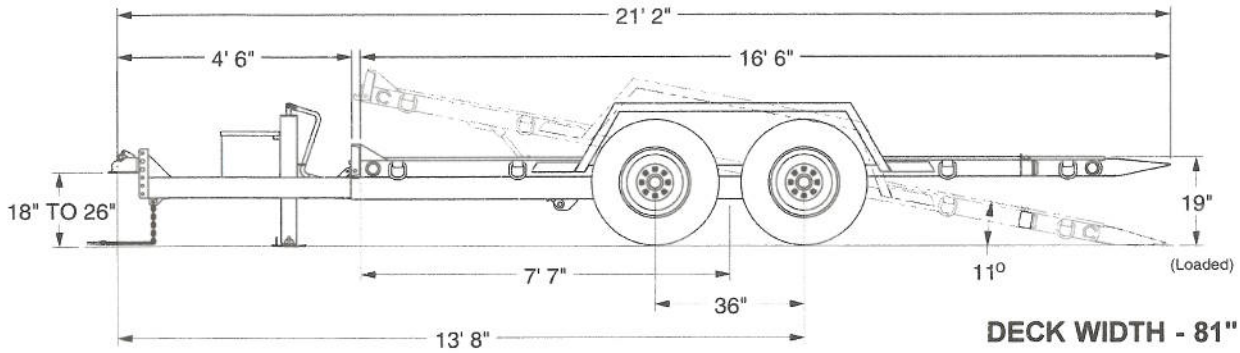


**Gross Vehicle Weight Rating (G.V.W.R.) ---------- 14,000 lbs.**
**Trailer Weight ---------- 2,700 lbs.**
**Capacity @ 65 MPH (Uniformly Distributed) ---------- 11,300 lbs.**

## FEATURES (All tiltbed decks can be tilted by one person)

**Hitch-** 2 5/16" ball coupler, adjustable for various heights
**Jack-** 10,000 lb. capacity with drop foot
**Safety Chains-** 2 each 1/4" x 30" Grade 70 high test cadmium plated with slip hooks and safety latches
**Deck Latch-** Over-center type with tension adjustment and safety pin
**Cushion Cylinder-** 3" x 8" with internal metered flow to cushion loading and unloading
**Load securement-** 8 each (4 per side) 5/8" D-ring type
**Axles-** 2 each ~~7,000 lb. capacity~~ each 6,000 lb capacity each
**Hubs-** 8 on 6.5 bolt circle with 1/2" cone type lug nuts
**Brakes-** 12" x 2" electric brakes both axles with 12 volt breakaway system
**Suspension-** Rubber torsion
**Wheels-** 16" x 6.00" 8 hole disc type 6.5 bolt circle
**Tires-** 235/80R 16 radial load range D
**Electrical-** Trucklite modular system with rubber isolated, sealed beam lighting, protected in tube construction
**Decking-** 2" rough surface No. 1 grade Fir with fasteners at all cross members
**Paint-** Metal acid etched and phosphatized, epoxy primer coat and polyurethane top coat for a durable finish
**Tool Box-** In tongue area

## CONSTRUCTION

**Main Frame** ---------- 1/4" Formed Channel
**Tongue Members** ---------- 5" x 2" x 3/16" Tube - ASTM A500B
**Deck Cross Members** ---------- 2 1/2" x 1 1/2" x 1/8" Tube - ASTM A500B
**Deck Perimeter Rails** ---------- 4 " x 3" x 1/4" Tube - ASTM A500B

Engineered with top quality high tensile steel tubular frame and cross members to minimize excess frame flex to provide a more stable and safe load.

*All specifications subject to change without notice*


*Quality Trailers From Gem State Manufacturing, Inc.*

P.O. Box 987 • Caldwell • Idaho • 83606 • 1-800-447-0213 • (208) 455-7551 • Fax: (208) 455-7554


**" For the Long Haul"**