Gorge 2nd Tunnel

Appendix H: G2T Tunnel Boring Machine Preliminary Performance Evaluation

Prepared by:

JACOBS ASSOCIATES
Engineers/Consultants

Jacobs Associates
1109 First Avenue, Suite 501
Seattle, WA 98101

JACOBS ASSOCIATES

Engineers/Consultants

INTERNAL MEMORANDUM

To:	Mark Havekost
cc:	Gregg Davidson
From:	Peter Raleigh
Job No:	4087.1
Date:	June 4, 2009
Subject:	Gorge 2nd Tunnel Tunnel Boring Machine Preliminary Performance Evaluation

1 Introduction

This memorandum presents results of our evaluation of a Tunnel Boring Machine (TBM) performance for the Gorge 2nd Tunnel (G2T) Project. It specifically considers: penetration and advance rates; desirable design features; and procurement options for the machine.

TBM's are a key capital cost item used in the construction of hydropower tunnels. TBM studies were carried out comparing manufacturers data to those obtained using the Jacobs Associates (JA) in house TBM performance prediction software based on the Norwegian Technological University (NTNU) methods. Using this information, the evaluation is able to determine appropriate penetration rates, key design features and provide cost alternatives which can be used in the cost-estimating process as well as during final design.

2 Project Summary

The G2T project, located on the western slopes of the north Cascade Mountains near State Highway 20 in Washington State, involves the construction of a second tunnel to convey water from Gorge Lake to the existing Gorge Powerhouse. The G2T, which will parallel the existing water tunnel, is anticipated to have an excavated diameter of between 14 and 20 ft and a length of approximately 11,000 ft. The tunnel will be excavated with a tunnel boring machine (TBM). There will be two connections to the existing tunnel, one upstream just below the Gorge Dam Intake, and one downstream above the existing powerhouse. These connections will be excavated with drill and blast methods and lined with cast-in-place concrete and/or steel lining.

3 Geology

The bedrock along the G2T alignment consists of gneiss, a foliated (mineralogically banded), granite-like metamorphosed igneous rock. The bedrock, commonly referred to as Skagit Gneiss, is predominantly medium- to coarse-grained (crystals 1 to 20 mm in

length) with mineralogy that includes plagioclase feldspar, quartz, biotite, and hornblende. The bedrock is predominantly fresh and unweathered, except in fault/shear zones, and is generally widely jointed, with joint spacing ranging from 3 to 10 ft. Based on preliminary observations, the gneiss has been determined to be weakly to moderately foliated, with foliation commonly, but not exclusively, sub-horizontal. Jointing is also commonly sub-horizontal and follows the foliation.

Table 1 below summarizes the basic assumptions used in the TBM performance evaluation. In 1984 and again in 1987 SCL provided rock samples to Robbins (a hard rock TBM manufacturer) who tested the samples and then prepared memoranda which listed the rock parameters sets for the eight samples. These eight parameter sets have been applied to the current evaluation and have generated eight penetration and wear predictions for each TBM diameter as shown in the *Reach Specific Assumptions* sections of Table 1. Further data will be obtained from additional samples gathered during the Summer 2009 geotechnical investigation program and the performance prediction will be adjusted once all the geotechnical data has been compiled.

Table 1 -Assumed Geologic Parameters

Overall Tunnel Length	11,000 ft

Strike and Dip of Potential Joints:	Lineation/Fault Joints: N 50 W, 90 degrees (vertical)
	Stress Relief Jointing (parallel to valley): N 50 E, 80 degrees NW
	Gneissic Foliation: N 70 W, 30 degrees SW

Joint Spacing	Approx 3 - 10 ft
Fissure Class	0-1 (160 cm)
Number of Marked Single Joints	1

Reach Specific Assumptions				
Reach	**Length (ft)**	**UCS (psi)**	**DRI***	**Quartz Equivalent (%)**
1	1,375	13,000	45	43
2	1,375	18,000	35	43
3	1,375	15,000	43	38
4	1,375	20,500	30	38
5	1,375	12,000	48	35
6	1,375	12,000	48	63
7	1,375	10,000	60	40
8	1,375	15,500	42	40

* DRI is the Drilling Rate Index, Appendix A describes the two parameters required to determine the index

4 Tunnel Boring Machine (TBM)

4.1 Introduction

The model used to evaluate TBM diameter alternatives and potential performance predictions was developed by JA following the extensive work carried out on the subject by Dr. Amund Bruland of the NTNU located at Trondheim in Norway. The NTNU estimation models are based on job site studies and statistics from tunneling in Norway and abroad, including more than 35 job sites and more than 135 miles of tunnel.

Samples of the input parameters and the corresponding output are shown in Tables 2 and 3 below. The preliminary geological data used for this was taken from the Robbins memoranda as noted in Section 3 above and the tunnel drive was divided into equal lengths of 1375 ft representing approximately one-eighth of the overall tunnel length. Each data set of data was then processed for the likely range of excavated tunnel diameter, 14-ft to 20-ft, at one-foot increments.

The existing geotechnical data was further supplemented by the geological investigation e.g. field mapping, desk-top studies, carried out to date during the Preliminary Design phase. Best practices were used in determining the other TBM related parameters, such as number of cutters, diameter, etc., which generally agree with the estimates obtained from TBM manufacturers when presented with the same data.

Table 2 shows an example of the input parameters used for Reach 8 where an 18-foot diameter TBM has been assumed. Table 3 shows the output obtained for this reach**.**

Table 2:

GEOLOGICAL PARAMETER INPUTS	**REACH 8**	
LENGTH OF TUNNEL IN REACH	1,375	ft
STRIKE ANGLE OF WEAKNESS PLANES	50	°
DIP ANGLE OF WEAKNESS PLANES	90	°
TUNNEL DIRECTION	48	°
POROSITY	4	%
DRI	42	
NUMBER OF MARKED SINGLE JOINTS	1	
QUARTZ CONTENT	40	%
FISSURE CLASS	I	
MACHINE PARAMETER INPUTS		
TBM DIAMETER	18	feet
NUMBER OF CUTTER DISCS	36	
CUTTER DIAMETER	19	inch
CUTTERHEAD RPM	10.5	rpm
STROKE LENGTH	3.94	feet
GROSS AVERAGE CUTTER THRUST	311	kN/cutter
INSTALLED CUTTERHEAD POWER	2200	kW
CLI	13	
WEEKLY SHIFT HOURS	120	h

Table 3:

INTERMEDIATE CALCULATIONS	**Machine**	
AVERAGE CUTTER SPACING	3	inch
EQUIVALENT CUTTER THRUST	297.75	kN / c
EQUIVALENT FRACTURING FACTOR	0.56	
PENETRATION COEFFICIENT	2.29	
TUNNEL LENGTH OF MARKED SINGLE JOINTS	8.2	feet
ORIENTATION OF MARKED SINGLE JOINTS	2	°
CRITICAL CUTTER THRUST	147.7	kN / c
CORRECTION FACTOR FOR POROSITY OF ROCK	1.44	
CORRECTION FACTOR FOR DRI OF ROCK	0.87	
CORRECTION FACTOR FOR CUTTER SPACING	0.96	
CORRECTION FACTOR FOR CUTTER DIAMETER	1	
CORRECTION FACTOR FOR MARKED SINGLE JOINTS	1.05	
FRACTURING FACTOR	0.45	
TOTAL FRACTURING FACTOR	0.45	
CORRECTION FACTOR FOR TBM DIAMETER	1.25	
CORRECTION FACTOR FOR CUTTERHEAD RPM	0.87	
CORRECTION FACTOR FOR NUMBER OF CUTTERS	0.95	
NORMAL NUMBER OF CUTTERS	38	
CORRECTION FACTOR FOR QUARTZ CONTENT	1.09	
TORQUE DEMAND		
RELATIVE POSITION OF AVG CUTTER ON C.H.	0.59	
CUTTER CONSTANT	0.034	
CUTTER COEFFICIENT	0.077	
GROSS TORQUE DEMAND	1389.9	kNm
NECESSARY INSTALLED CUTTERHEAD POWER	1528.2	kW
CUTTER LIFE		
BASIC CUTTER RING LIFE	66.28	h
AVERAGE CUTTER RING LIFE	2.07	h / c
AVERAGE CUTTER RING LIFE	21.25	ft / c
AVERAGE CUTTER RING LIFE	117.3	cy / c
TIME CONSUMPTION FOR MISC	42.5	h / 1,000 ft
TIME CONSUMPTION FOR TBM REPAIR	17.6	h / 1,000 ft
TIME CONSUMPTION FOR BACKUP REPAIR	10.2	h / 1,000 ft
TIME CONSUMPTION FOR REGRIPPING	19.0	h / 1,000 ft
TIME CONSUMPTION FOR CUTTER CHANGE	18.3	h / 1,000 ft
TIME CONSUMPTION FOR BORING	97.2	h / 1,000 ft
EFFECTIVE WORKING HOURS	117.36	h
MACHINE UTILISATION	42	%

PENETRATION RATES	**Machine**	
BASIC NET PENETRATION RATE	10.3	feet/h
BASIC PENETRATION RATE	4.98	mm/rev
PENETRATION RATE IN MARKED SINGLE JOINTS	10.8	feet/h
AVERAGE NET PENETRATION RATE IN ZONE ONE	10.3	feet/h
WEEKLY ADVANCE RATE	502	feet/week

The penetration rates obtained for all TBM diameters and reaches modeled are shown in Table 4 and Figure 1. Average net penetration rates range from 11.5 to 9.75 feet/hour for diameters ranging from 14-feet to 20-feet. These are favorable production rates for TBM excavation.

.

4.2 Results

The results shown in Table 4 and Figure 1 are estimations based on the NTNU performance prediction model and are a function of the input values and assumptions provided in Table 2. The values obtained through the model are slightly more conservative but compare favorably with the results provided by the TBM manufacturers Herrenknecht and Robbins.

The hourly advance rates were calculated based on a machine availability (time actually spent boring) of 42%. This is in the higher range of availability, but is considered reasonable due to the relatively good massive rock expected which should reduce the need for frequent stoppage time for ground support installation and related activities. The intact nature of the rock and few fractured or faulted zones should bode well for water infiltration and related production slowdowns. Cutter consumption is expected to be average to slightly above average. The rock is fairly strong with a reasonable quartz content which will result in a slight increase in downtime due to the need to carry out more frequent cutter changes and related cutterhead maintenance.

At this preliminary stage, the general consensus on the part of the TBM manufacturers based on their experience and the original test reports is that the Skagit Gneiss is a good boreable rock of medium strength and abrasivity. It should be emphasized that the geotechnical information used to date has been rather limited and the data being collected presently should help to refine the inputs so that a better estimate of the net penetration rates, cutter wear and machine availability can be determined.

Key geological parameters which need to be confirmed aside from rock strength that strongly affect the TBM performance evaluation are the dip angle of the weakness planes and the number of marked single joints. Additional investigations will refine the parameters used so far in the present analysis. A revision to this performance prediction will be made once all the data has been gathered from the geotechnical investigations.

Table 4:
Net Penetration Rates (ft/hr)

Geologic Reach	TBM Diameter, ft/hr						
	14.76	**15**	**16**	**17**	**18**	**19**	**20**
1	11.74	11.84	11.25	11.15	10.86	10.43	10.07
2	9.41	9.51	9.02	8.99	8.76	8.46	8.17
3	11.35	11.41	10.86	10.76	10.50	10.10	9.71
4	8.04	8.13	7.71	7.71	7.51	7.28	7.02
5	12.40	12.50	11.84	11.78	11.41	10.99	10.59
6	12.40	12.50	11.84	11.78	11.41	10.99	10.59
7	14.56	14.63	13.87	13.74	13.32	12.79	12.30
8	11.12	11.22	10.63	10.56	10.30	9.91	9.54
Average	**11.38**	**11.47**	**10.88**	**10.81**	**10.51**	**10.12**	**9.75**

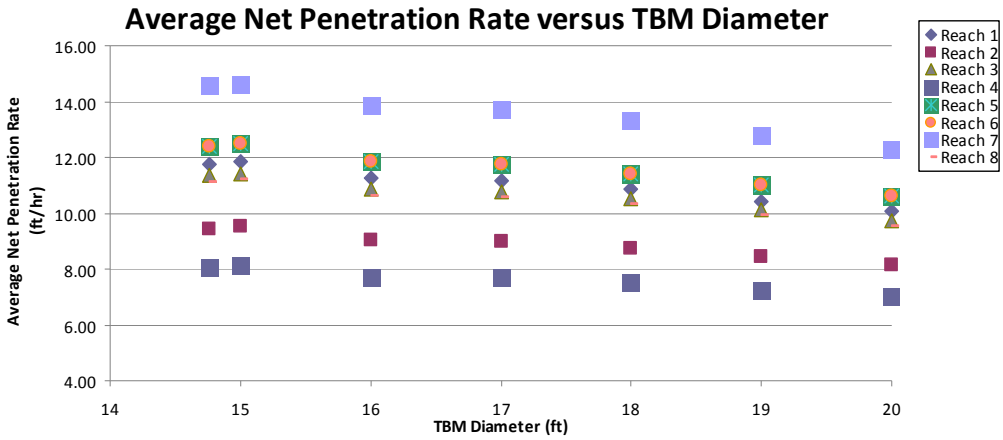

Figure 1: Net Penetration rates for various reaches versus TBM diameter

4.3 Key TBM Features

Given the ground conditions which are good quality massive fairly hard rock and the thrust and torque requirements calculated the TBM would need to be a hard rock main beam gripper machine with an electric main drive. Figures 2 and 3 in the attachment shows this type of configuration. The machine should be specified with the following key features including:

- Full hard rock cutterhead with hardened buckets and front loading cutters
- 35 ton, 19-inch diameter cutters
- A minimum of 36 cutters for a typical 18 ft diameter
- A minimum thrust of 1,260 tonnes
- A minimum cutterhead speed of 10.5 rpm
- A minimum cutterhead torque of 1,000 kip-ft
- Partial finger shield to permit installation of rock bolts
- Rib erector
- Probing and grouting capabilities
- Full integrated operators cabin with ergonomic controls

4.4 TBM Costs: New vs Used

The cost and schedule for delivery of the TBMs were obtained from two prominent manufacturers; Robbins and Herrenknecht. Both were asked oth to price an 18 ft diameter main beam TBM and provided the geological data taken from the above mentioned SCL memos. The results are shown in Table 5 below:

Table 5: Manufacturers vs Engineer's prediction

GORGE 2ND TUNNEL TBM COMPARISON	Manufacturer		Engineer's Estimate
	Robbins	Herrenknecht	
Diameter	18.04 ft	18.04 ft	18.04 ft
Cutter Size	19 in	19 in	19 in
Number of Cutters	36	38	36
Maximum Cutter Load	70,000 lbs	75,000 lbs	70,000 lbs
Maximum Cutterhead Thrust	1260 Tons	1425 Tons	1260 Tons
Cutterhead RPM	10.5	11	10.5
Cutterhead Torque	1,329.8 kip-ft	1,791.2 kip-ft	1032.89 kip-ft
Cutterhead Installed Power	2954 hp	3753 hp	2954 hp
Boring Stroke	6 ft	6 ft	4 ft
Average Instantaneous Penetration Rate	13.7 ft/hr	13 ft/hr	10.5 ft/hr
Delivery (Ex-Works)	2010	10 - 12 Months	
Cost (Ex-Works)	USD 13 - 14M	USD 7 - 8M	

5 Discussion and Conclusion

Based on our preliminary analysis the Skagit Gneiss is a good boreable rock which should be amenable to use of a hard rock TBM. Our ongoing geotechnical investigations will confirm this preliminary analysis and help to refine the inputs to our model in order to produce reasonable predictions for performance in addition to cutter wear and the key minimum parameters for the TBM to meet project estimates of cost and schedule. Delivery of a new or refurbished TBM to site will require 12 months of lead time and is expected to cost approximately $10 million dollars. The performance prediction confirms earlier work prepared by JA for SCL regarding the project estimation which included a rudimentary schedule indicating a roughly 9 month period from TBM on site through to completion near the tunnel inlet structure. The current prediction of TBM advance rates averages 10.5 ft/hr with 42% TBM availability.

6 References

Bruland, A. (1998).Hard Rock Tunnel Boring Advance Rate and Cutter Wear, NTNU Trondheim, Norway

Askilsrud, O. (1984).Rock Report 1862, The Robbins Company, Memo to Martin Hansen, dated March 5, 1984.

Nowak, D. (1987). File C5231 Gorge Power, The Robbins Company, Memo to Martin Hansen, dated September 16, 1987

Attachment :
Figure 2: Typical Hard Rock Main Beam TBM (15 ft diameter tunnel)

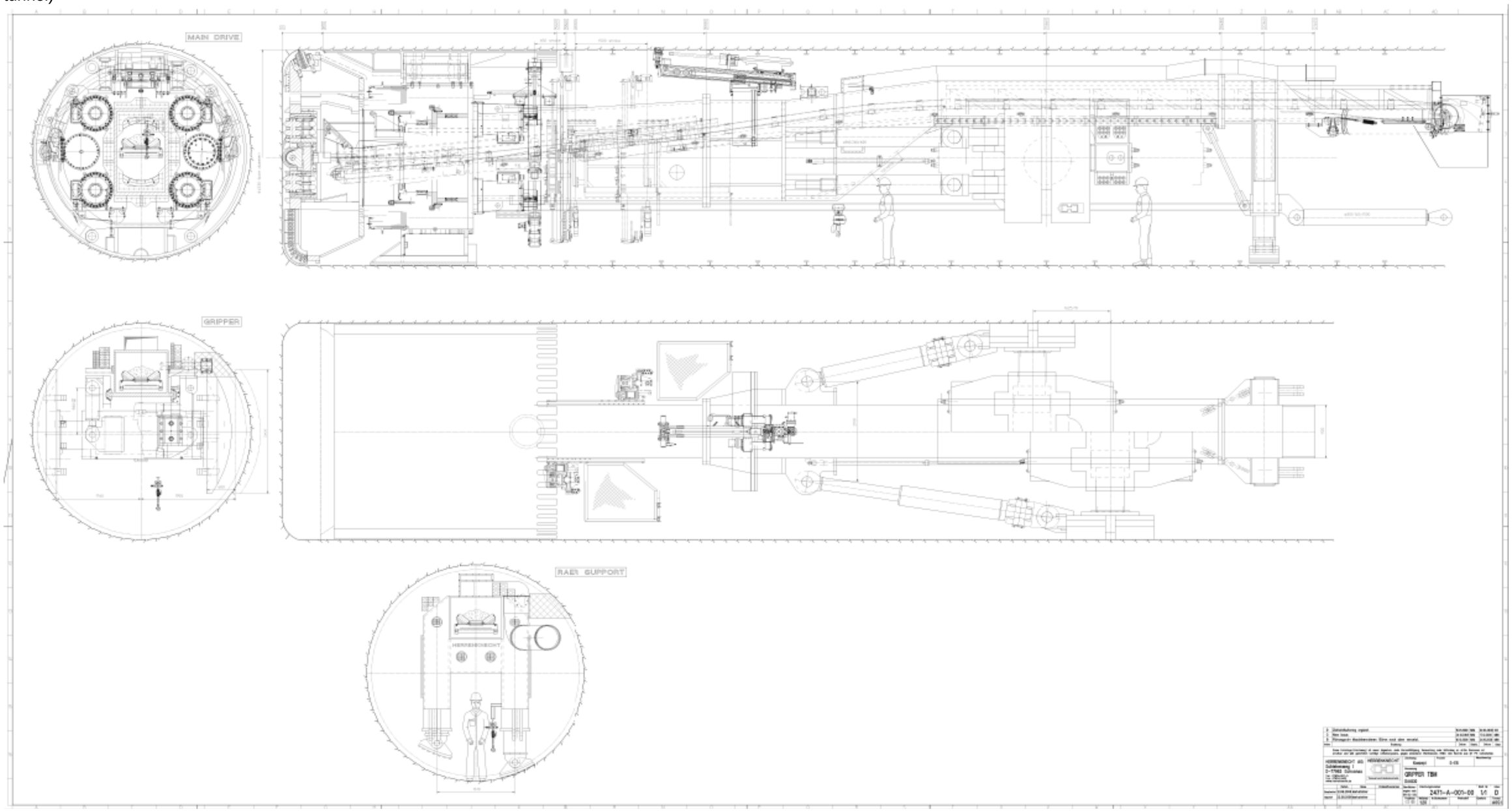

Figure 3: Typical Hard Rock TBM Trailing Gear (15ft diameter tunnel)

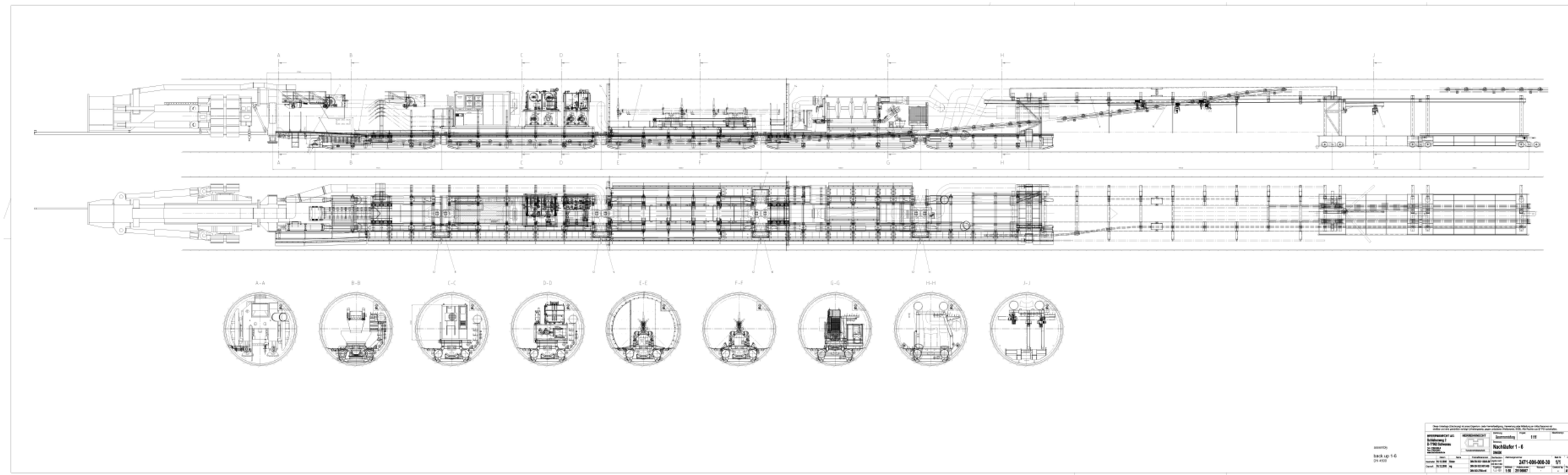

Appendix A:

1.2 THE DRILLING RATE INDEX DRI

1.20 General

The Drilling Rate Index is assessed on the basis of two laboratory tests, the Brittleness Value S_{20} and Sievers' J-value SJ.

1.21 The Brittleness Test

The Brittleness Test gives a good measure for the ability of the rock to resist crushing by repeated impacts. The test method was developed in Sweden by N. von Matern and A. Hjelmér in 1943. Several modified versions of the test have been developed for various purposes. An outline of the test is shown in Figure 1.1.

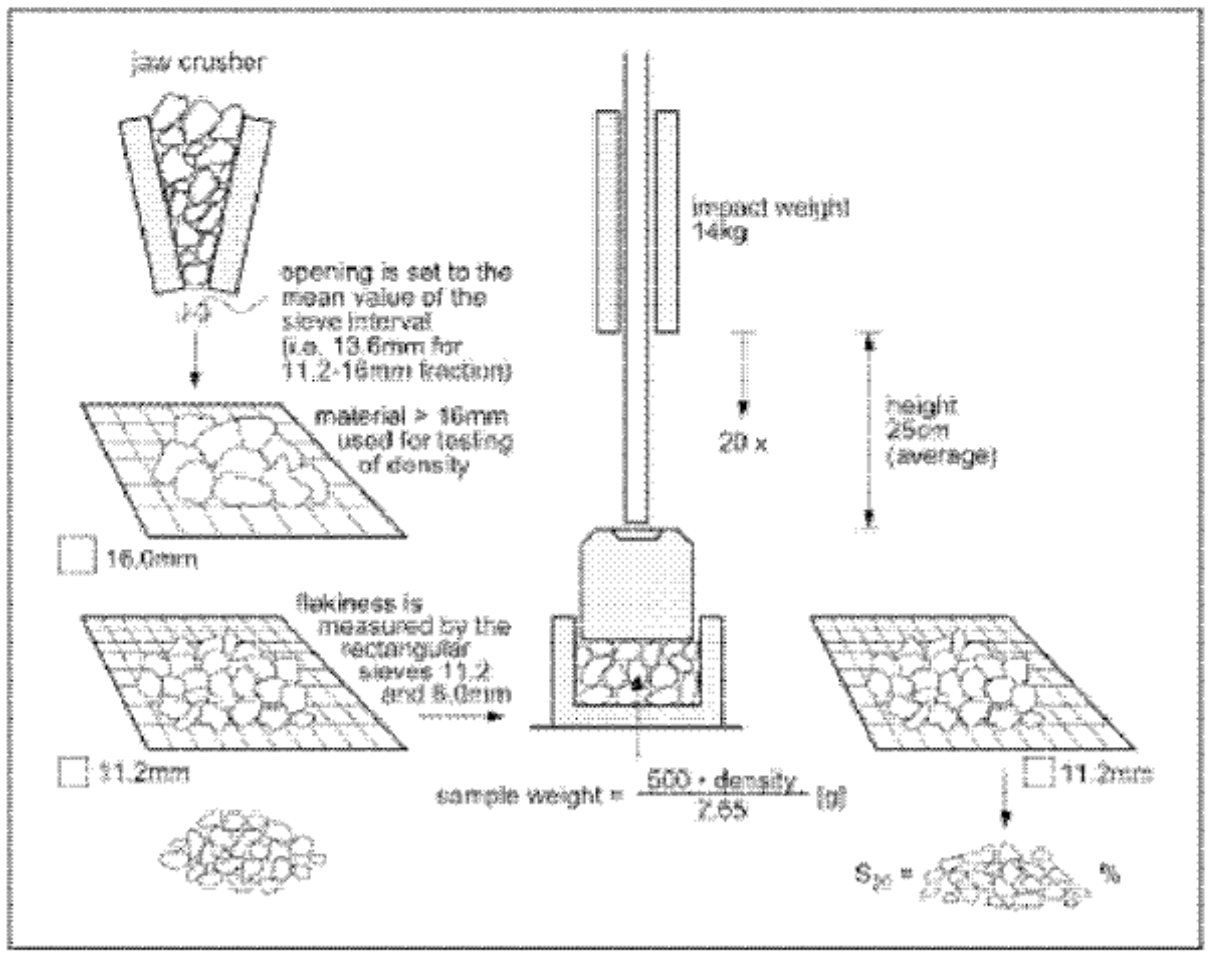

Figure 1.1 *The Brittleness Test.*

1109 First Avenue, Suite 501, Seattle, WA, 98101 Phone: (206) 588-8200 Fax: (206) 588-8201

The sample volume corresponds to 500 grams of density 2.65 g/cm^3 from the fraction 16 - 11.2 mm. The Brittleness Value S_{20} equals the percentage of material that passes the 11.2 mm mesh after the aggregate has been crushed by 20 impacts in the mortar. The Brittleness Value is the mean value of 3 - 5 parallel tests.

1.22 The Sievers' Miniature Drill Test

The Sievers' Miniature Drill Test gives a measure for the surface hardness (or the resistance to indentation) of the rock. The test method was developed by H. Sievers in the 1950s. The test is performed on a pre-cut rock sample as shown in Figure 1.2.

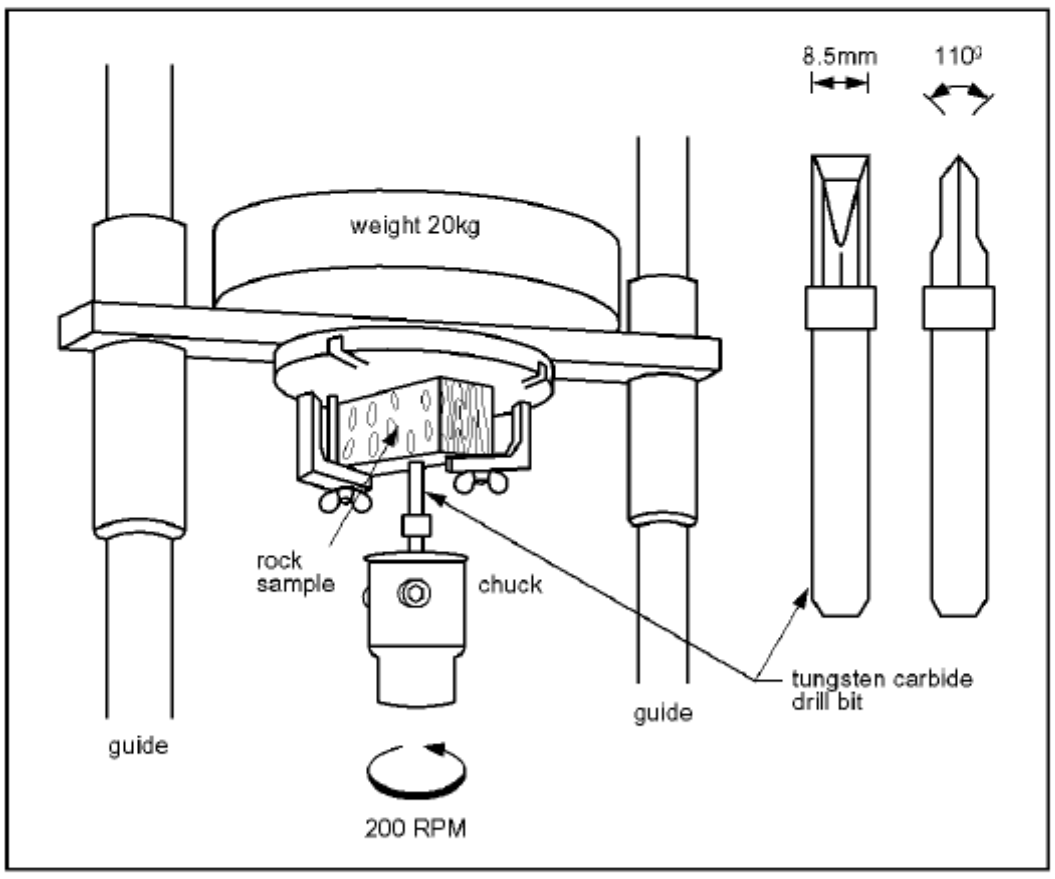

Figure 1.2 *The Sievers' Miniature Drill Test.*

The Sievers' J-value is the drill hole depth after 200 revolutions of the miniature drill bit, measured in 1/10 mm. The SJ-value is the mean value of 4 - 8 drill holes.

The pre-cut surface of the sample must be parallel or perpendicular to the foliation of the rock. The SJ-value measured parallel to the foliation is used to find the Drilling Rate Index. If the SJ-value for drilling perpendicular to the foliation differs from the value for drilling parallel to the foliation, the drilling rate will most likely vary with drilling direction to the foliation.

1.23 Assessment of DRI

Figure 1.3 is used to assess the Drilling Rate Index from the Brittleness Value S_{20} and the Sievers' J-value.

The Drilling Rate Index may be described as the Brittleness Value corrected for the rock surface hardness. For a Sievers' J-value of 10, which is common for e.g. granite or syenite, the DRI equals the S_{20} value.

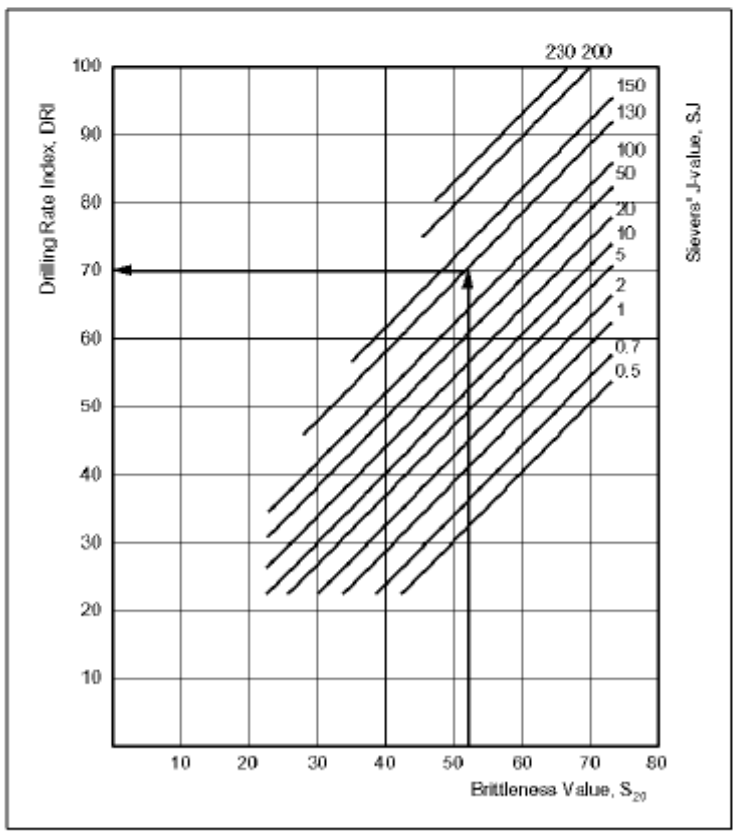

Figure 1.3 *Diagram for assessment of DRI.*