SEATTLE CITY LIGHT

CONSTRUCTION GUIDELINE

STANDARD NUMBER: **DU5-15.8**
PAGE: 1 of 2
SUPERCEDING: July 15, 2003
EFFECTIVE DATE: October 27, 2004

SINGLE PHASE PRIMARY UNDERGROUND,15kV METAL OXIDE ARRESTER, #1 2/C, 27KV XLP CABLE

Note: Use this Construction Guideline where fault duty is 40,000 A or less. Current limiting fuse protects the surge arrester which has a minimum fault-withstand rating of 20,000 A rms symmetrical.

Note limiter orientation. Use trolley wire to stabilize and reduce jumper length.

Minimum clearance of jumpers shall be 12" Ø-Ø and 8" Ø-ground.

Keep jumpers as short as possible between terminator and arrester, top and bottom.

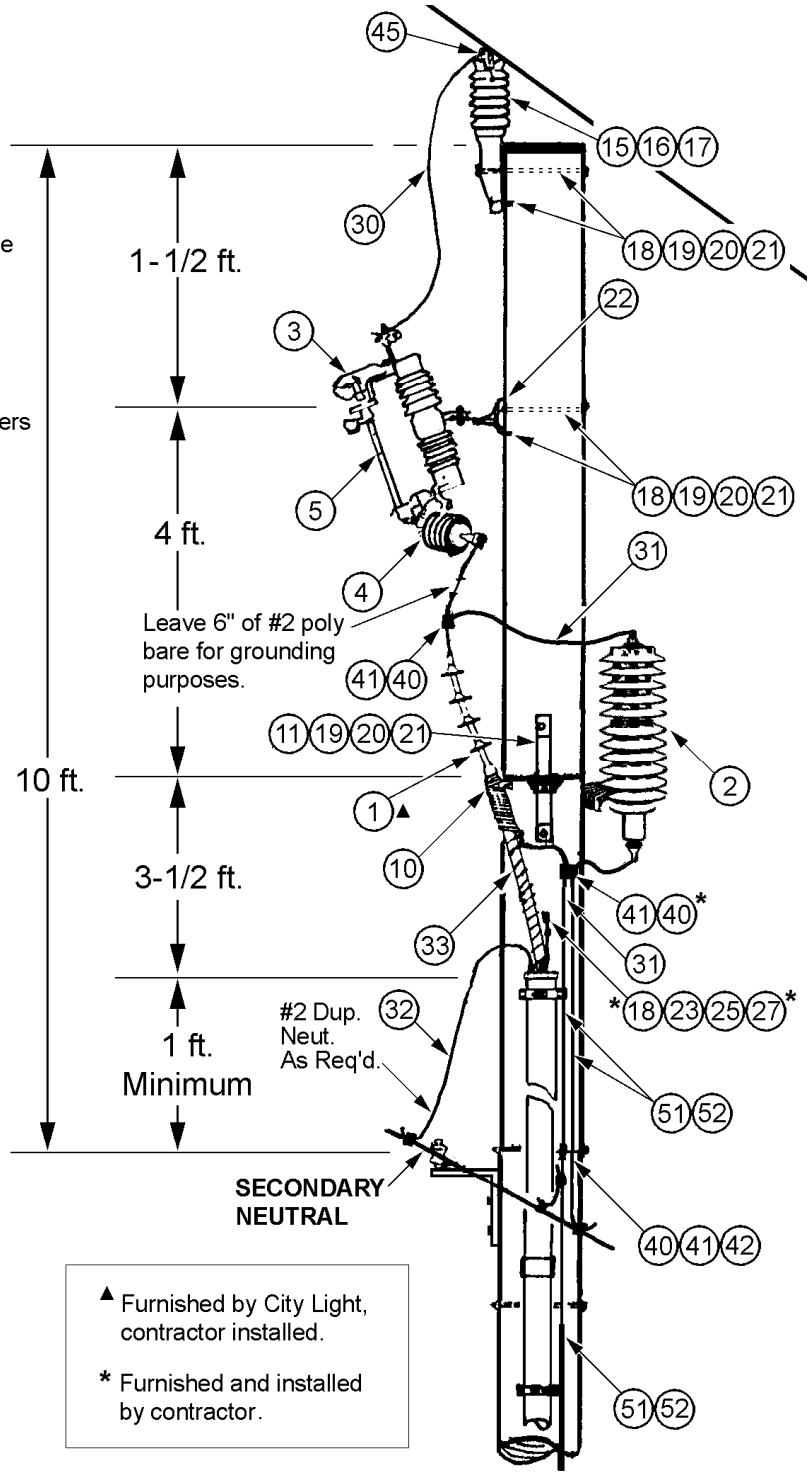

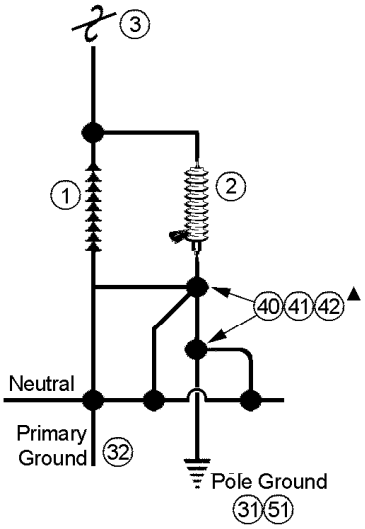

GROUNDING SCHEMATIC

Molding should cover grounds between secondary neutral and terminator bracket.

▲ Furnished by City Light, contractor installed.

* Furnished and installed by contractor.

POLE GROUND CONTINUOUS TO ARRESTER

STANDARDS COORDINATOR	STANDARDS SUPERVISOR	UNIT DIRECTOR

Material List

Item	Quantity	Description	Stock No.
		Terminator, 27kV	
1	1	Cold Shrink #1/0 1/C	686532
		Pigtail Connector #1/0	686056
2	1	Arrester, Metal Oxide, 17 kV MCOV	680115
3	1	Cutout, 27kV, 100A, Ultra HD	682099
4	1	Primary Fault Limiter Per Guideline DU11-1	–
5	1	Expulsion Fuse Per Guideline DU11-1	–
10	1	Bracket, Terminator Support	563221
11	1	Bracket, Terminator Arrester	686830
15	1	Insulator, Line Post	690157
16	1	Bracket, Insulator, Pole Top	563253
17	1	Stud, Insulator, Short	696826E
18	3	Screw, Lag, Galvanized	785261E
19	4	Bolt, Galvanized, Machine, 5/8” XL	780840E to 780840E
20	4	Washer, Flat, 2-1/4” x 2-1/4”	585135E
21	4	Washer, Locking, Coil Spring, 3/4”	584267E
22	1	Bracket, Cutout Mounting	563222
23	1	Bracket and J-Bolt, Cable Grip Support	780127
25	1	Grip, Cable Support, Single Eye, 1” – 1-1/4”	763551
27	1	Washer, Round, Galvanized, 1/2”	585025E
30	4 ft.	#4 Cu, Bare, Solid	610208
31	30 ft.	#2 Cu, Poly, Solid	611390
32	As Req'd	#2 Cu, XLP, Poly	613730
33	As Req'd	#1/0 XLP, 2/C, 27kV	602025
		Connector, Copper to Copper, Crimpet	
40	0 to 5	#4 to #4	677323E
		#2 to #2	677326E
41	3 to 8	Connector, Split Bolt, #2 - #14 to #2 - #14	668867E
		Connector, Aluminum to Copper	
42	0 or 2	#4 Cu to 1/0 Al PAC (2 Bolts)	652020E
		AMPACT (See Guideline D14-4 for sizes and range.)	651090 to 651109
		Clamp, Hot Line	
45	1	Al – See D14-6	–
		Cu – 2/0 - #8	580725E
		400 - #6	580727
51	16 ft.	Moulding, 1/2" x 8' Plastic	582060E
52	8	Staples 5/8" x 2-1/4" Galvanized	583200E

Quantities will vary due to: 1) Contractor **or** City Light installed, 2) New **or** existing pole ground, and 3) Copper **or** aluminum neutral.

Notes:

1. On dead-end poles, overhead line must dead-end on the same side as terminators are mounted, except where guy stub may be placed to lead guy wire away from pole horizontally.
2. Minimum clearance of jumpers shall be 12” phase-to-phase, 8" phase-to-ground.
3. When overhead secondary is aluminum, Item 42 is to be used. Copper wire from ground or neutral is to be drip looped below the aluminum neutral.
4. When contract job, contractor connects terminator (with pigtail) to arrester. City Light installs wire from limiter and connects to pigtail at arrester.
5. For fault limiter placement, see Guideline D11-2.

References:

U7-10.2 Primary Conduit Riser Pole Base Detail
U7-10.9 Grounding Conduit Risers on Poles
D16-2 Grounding Rod Installation
DU11-1 Fusing Schedule

STANDARDS COORDINATOR	STANDARDS SUPERVISOR	UNIT DIRECTOR