SEATTLE CITY LIGHT
# MATERIAL STANDARD

Specification **5833.9**
Issued May 2, 1962
Rev: May 17, 1994

STRAPS

SECONDARY RACK REINFORCING

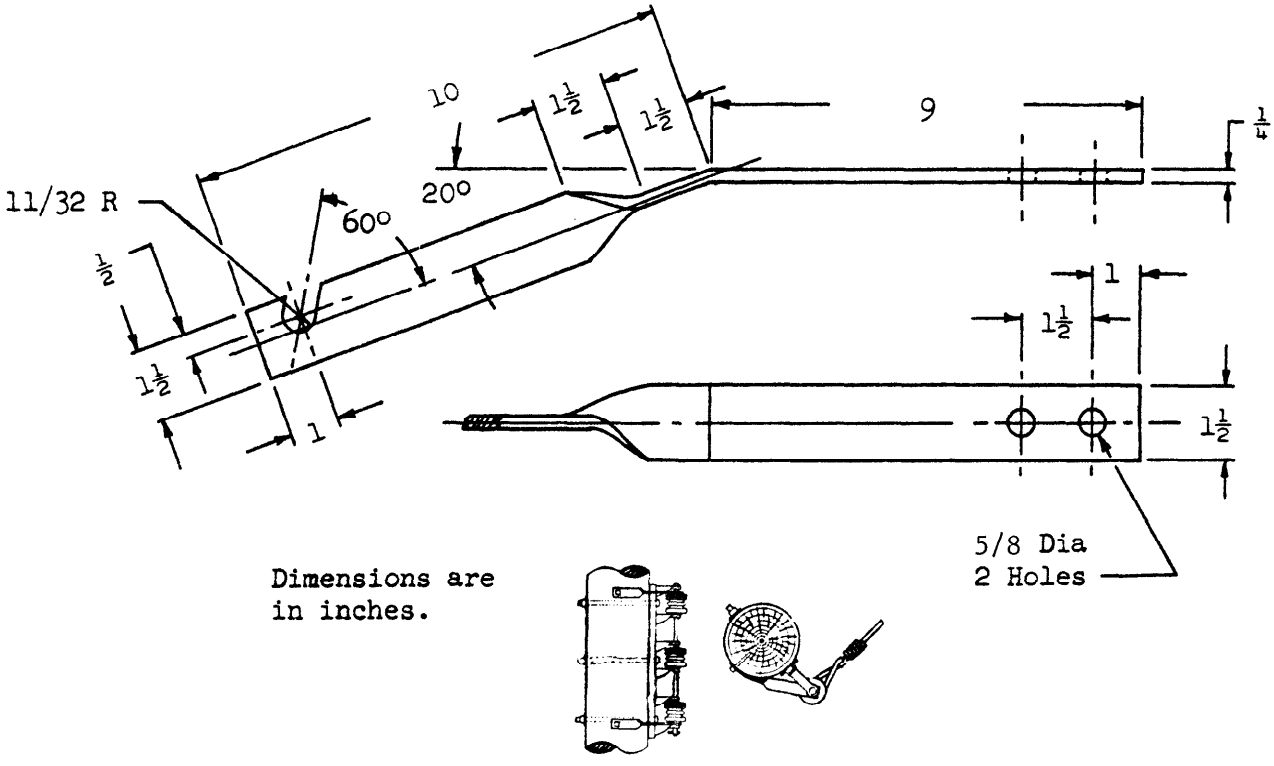


SECONDARY RACK REINFORCING STRAPS shall be of the configuration and dimensions shown, and shall be made of hot-rolled bar steel conforming to ASTM specification A 107.

The straps shall be galvanized, after fabrication, in accordance with ASTM specification A 153.

Reference Specifications: ASTM A 107, A 153, latest revisions.

Stock Unit: Each

Stock Number: 583370

| ORIGINATOR | STANDARDS COORDINATOR | STANDARDS SUPERVISOR | UNIT DIRECTOR |
|---|---|---|---|
| J E Perry | Charles L. Shaffer | John Skinner | D. DeVries |