STREETLIGHT SYSTEM GROUNDING AND BONDING

1. Scope

This Construction Standard covers the grounding and bonding requirements for single phase streetlight systems served by the Looped Radial and Network distribution systems.

Multiphase streetlight systems and streetlights attached to wood poles or served exclusively by overhead conductors are outside the scope of this document.

2. Application

This document provides direction to SCL crews and others about properly grounding and bonding SCL streetlight equipment including handholes and poles. The purpose is to ensure streetlight equipment is uniformly and properly installed by SCL crews and others. The required bonding includes every metallic component of a particular system of streetlights including handhole lids and poles constructed of conductive material.

3. Introduction

The safety of an electrical system is dependent on its grounding and bonding system. Because conductors, exposed metallic components and surfaces can become energized, it is critical that grounding and bonding systems be installed correctly.

Providing a dedicated grounding conductor throughout a streetlight circuit and connecting it to all metal components within that system creates a dedicated, low resistance path that fault current can take in the case that any energized conductors come in contact with metal surfaces in that system. During a fault, current travels through all available paths back to the source, in this case a transformer. Providing a good fault current return path ensures that fault current can quickly and effectively return to the power source and operate the protective device.

4. Definitions

Bonding: The electrical interconnecting of conductive parts, designed to maintain a common electrical potential. (NESC, 2012)

Ground (conductor): A conductor used to carry fault current from the fault location back to the energy's source.

Grounded: Connected to or in contact with earth or connected to some extended conductive body that serves instead of the earth. (NESC, 2012)

Ground Rod (or driven rod): One of the seven types of approved grounding electrodes listed in Section 9 of the NESC, Grounding Methods. City Light installs a rod that is at least eight feet long and 5/8-inch in diameter and connects to a #4 AWG minimum copper (solid, bare) wire electrode throughout the handhole system.

For the purpose of this standard, conductors in the figures are color coded as follows.

- L1 – Black
- L2 (if more than one) – Red
- Neutral – White
- Ground – Green

5. Looped Radial Streetlight System, Overall

Figure 5 presents an example of a two branch streetlight system supplied by the Looped Radial distribution system. Shown in the plan view are streetlights, the handholes that serve each streetlight, and the streetlight distribution handhole/ manhole that connects the streetlight system to the Looped Radial distribution system via an overhead transformer or service vault.

When multiple circuits are used to serve a section of streetlights, the circuits shall be alternated between streetlights. Alternating circuits ensure, in the case of a one-circuit fault, that every other streetlight would have power until repairs to the faulted circuit are completed.

5. Looped Radial Streetlight System, Overall, continued

Figure 5. Two Branch Streetlight System Supplied by Looped Radial System Example

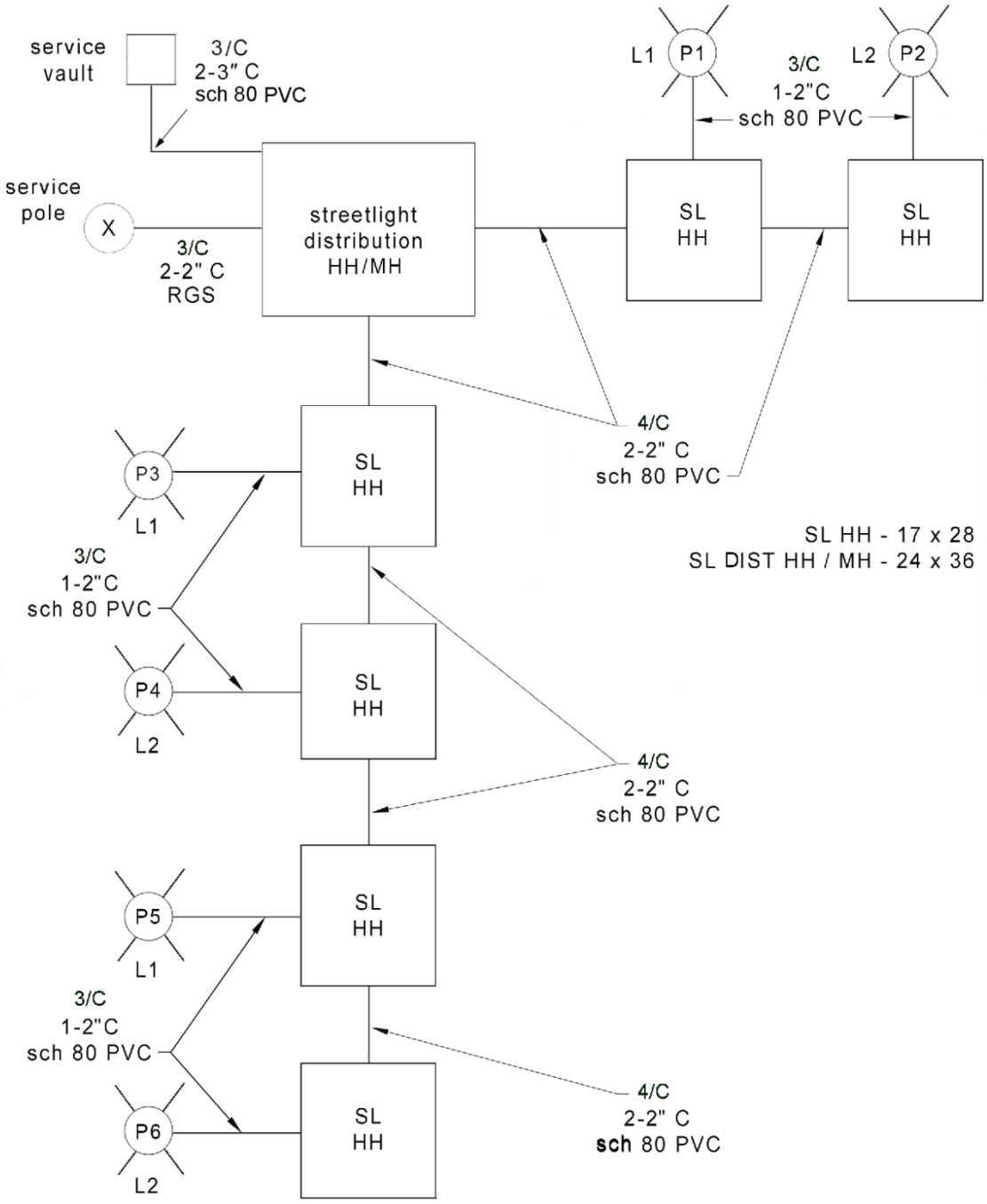

6. Network Streetlight System, Overall

Figure 6 presents an example of a two-branch streetlight system supplied by the Network distribution system. Shown in plan view are streetlights, the handholes that serve each streetlight handhole and the streetlight distribution handhole/manhole that connects the system to the Network distribution system via a transformer in a Network vault.

When multiple circuits are used to serve a section of streetlights, the circuits shall be alternated between streetlights. Alternating circuits ensure, in case of a one-circuit-fault, that every other streetlight would have power until repairs to the faulted circuit are completed.

In the SCL streetlight system, the green ground conductor shall be no smaller than #6 AWG stranded copper.

Figure 6. Two Branch Streetlight System Supplied by Network Distribution System Example

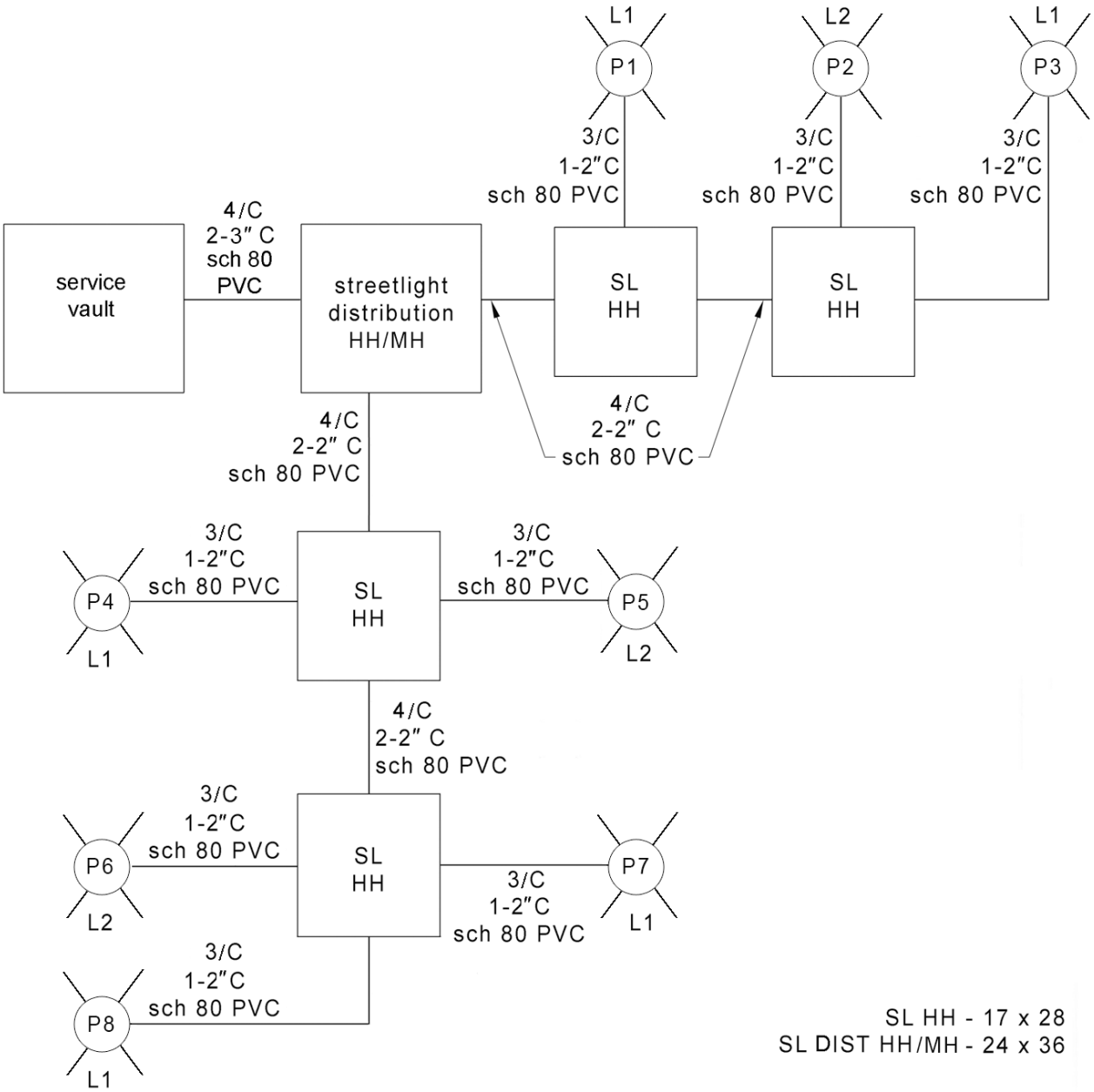

7. Streetlight Distribution Handhole/ Manhole

The streetlight distribution handhole is the starting point of the streetlight system, connecting to the distribution system via a transformer and to the individual streetlights via a series of conduits and handholes.

Conductors from the transformer secondary enter, are spliced as necessary, and leave via conduits, typically Schedule 80 PVC. In this handhole, a ground rod is driven and connected to the lid ground lug, frame ground lug, dedicated green grounding conductor, #4 AWG solid copper wire electrode, and any metal conduits that enter or leave the handhole via an insulated grounding bushing.

In the Looped Radial distribution system, the green grounding conductor will be bonded to the neutral in this handhole. See Figure 7.1. This is the only point in the system that the neutral and ground conductors are bonded together. The green grounding conductor shall be tested along its entire length to insure it is continuous all the way back to the energy source. The ground rod or series of ground rods shall be tested to insure it has a resistance to ground of 25 ohms or less prior to connecting to the neutral or service.

Connect a continuous #4 AWG copper wire electrode (solid, bare) to each ground rod lead and route it under the handhole conduits to help achieve the 25 ohm requirement.

Connections to grounding electrodes shall be exothermic welds that are listed for direct burial use.

Figure 7.1. Streetlight Distribution Handhole/Manhole – Two Branch Looped Radial Example

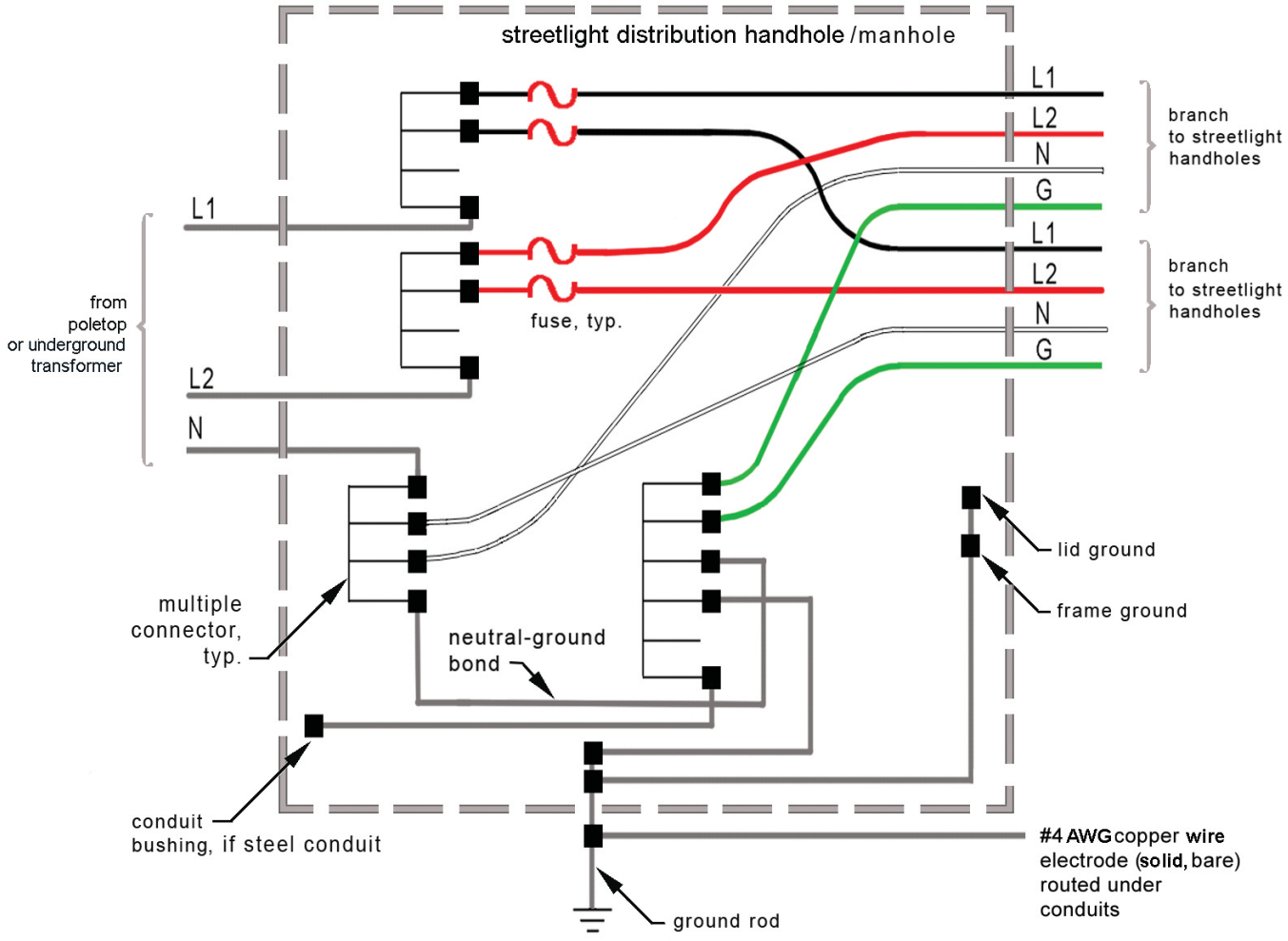

7. Streetlight Distribution Handhole/Manhole, continued

In the Network distribution system the green grounding conductor is bonded to the neutral within the Network vault, so no neutral to ground connections are made in the streetlight distribution handhole. See Figure 7.2.

The green grounding conductor shall be tested along its entire length to insure it is continuous all the way back to the energy source.

As each conductor (L1 or L2) leaves the distribution handhole, it must be fused.

Figure 7.2. Streetlight Distribution Handhole/Manhole – Two Branch Network Example

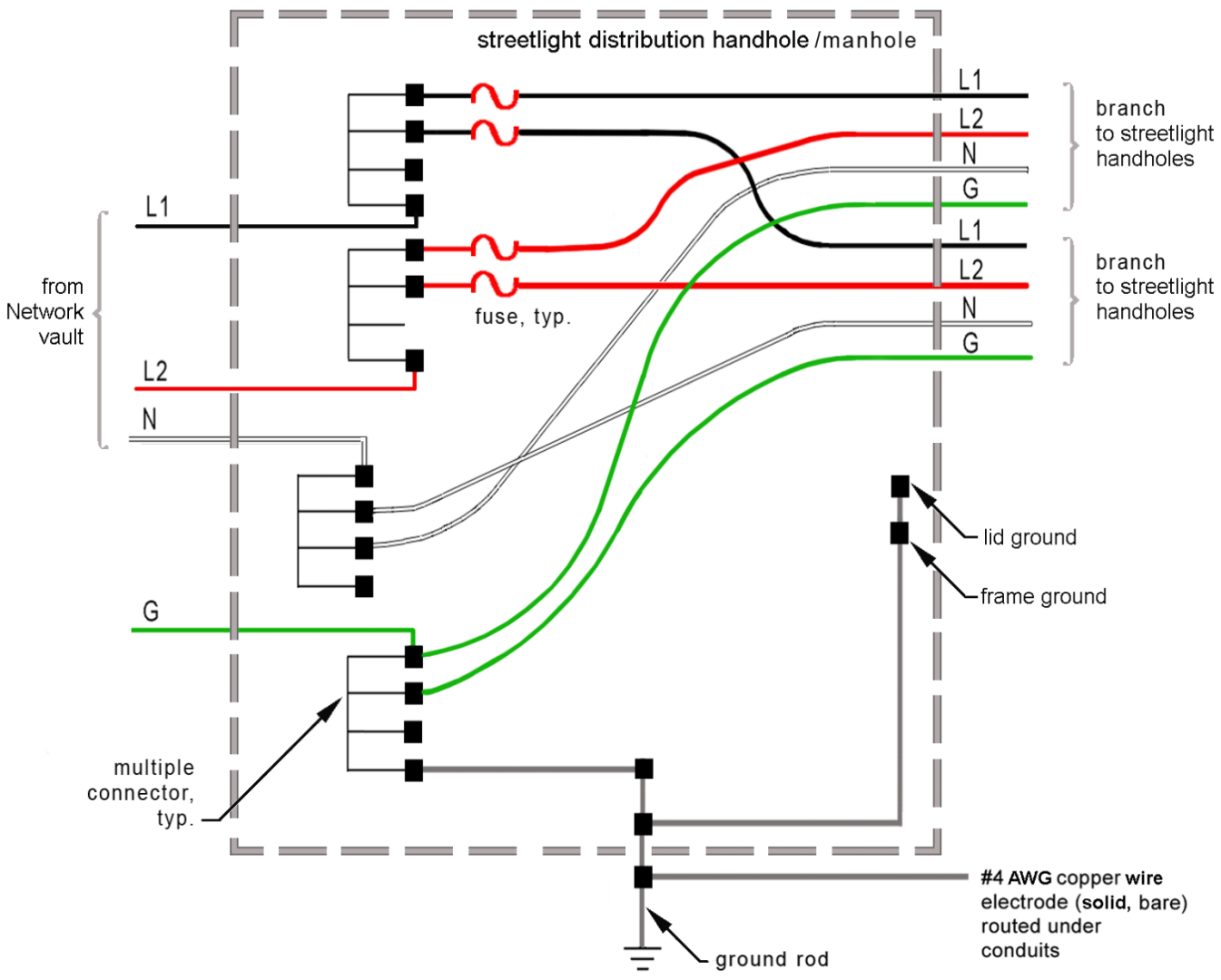

8. Individual Streetlight Pole Handhole and Streetlight Handhole, Typical

The streetlight handhole connects to the streetlight distribution handhole (Section 7), one or more streetlights, and any subsequent streetlight handholes in the system. See Figures 8.1, 8.2 and 8.3. The green grounding conductor routed from the streetlight distribution handhole shall be connected to all metal components in the handhole and the streetlight pole, and the ground rod. Note: The ground conductor is not bonded to the neutral in the streetlight handhole.

Connect a continuous #4 AWG copper wire electrode (solid, bare) to each ground rod lead and route it under the handhole conduits to help achieve the 25 ohm requirement.

Connections to grounding electrodes shall be exothermic welds that are listed for direct burial use.

From the streetlight handhole, line, neutral, and ground conductors are routed within conduit to the cavity of the streetlight pole where they can be intercepted via a streetlight pole base access panel. In the streetlight pole base access panel, the line conductor is routed up to the luminaire with the neutral conductor. At the streetlight pole base access panel, the ground conductor is connected to the metal pole with a set screw lug and to the grounding electrode if one is installed. The ground conductor is then routed up to the luminaire where it is connected to the fixture's ground terminal.

Figure 8.1. Streetlight Pole Handhole and Streetlight Handhole

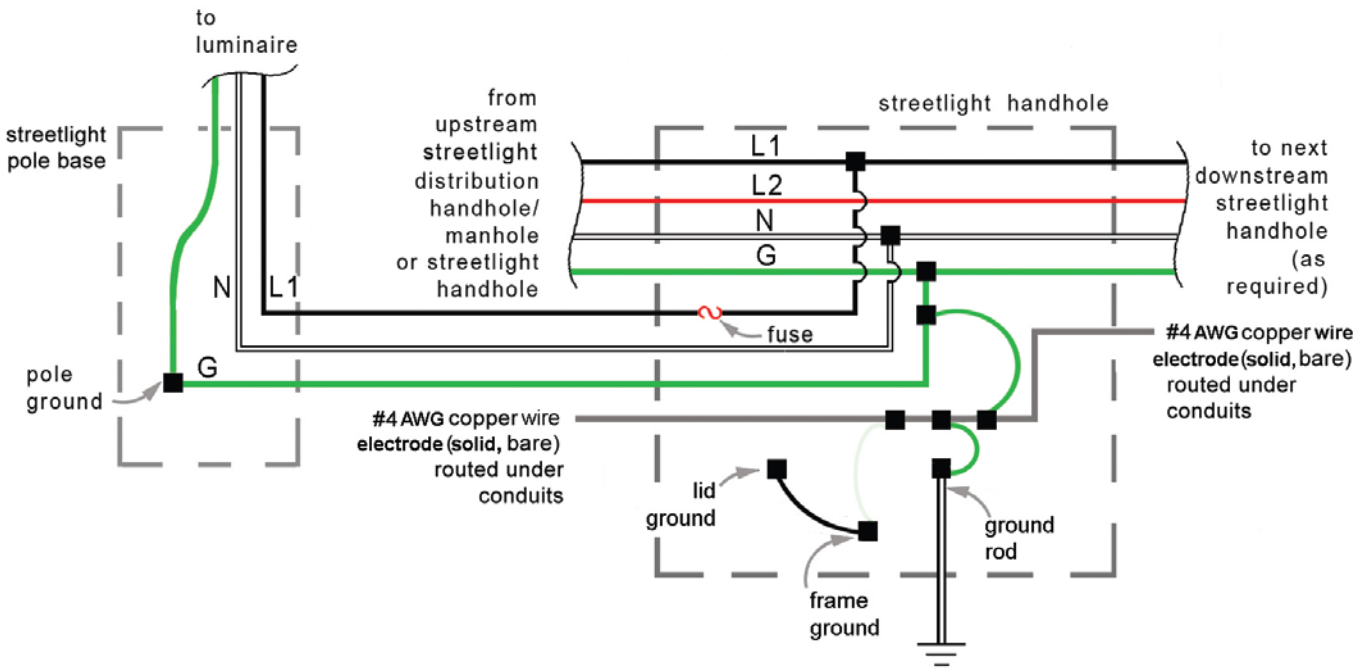

Figure 8.2. Streetlight Pole Handhole

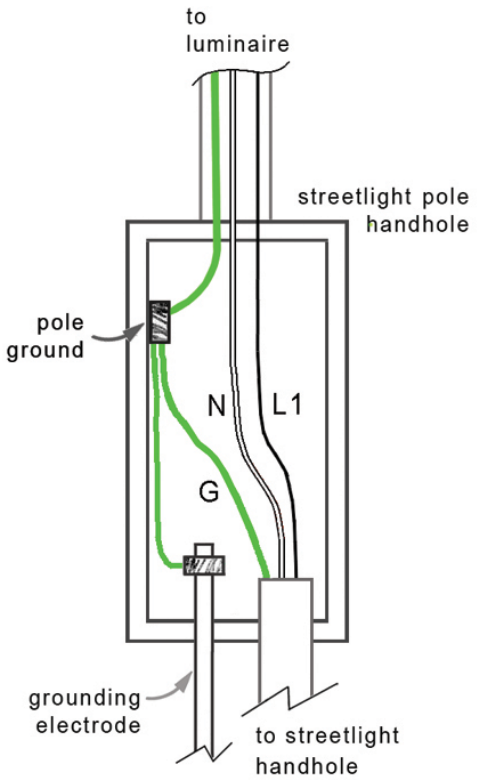

Figure 8.3. Streetlight Handhole

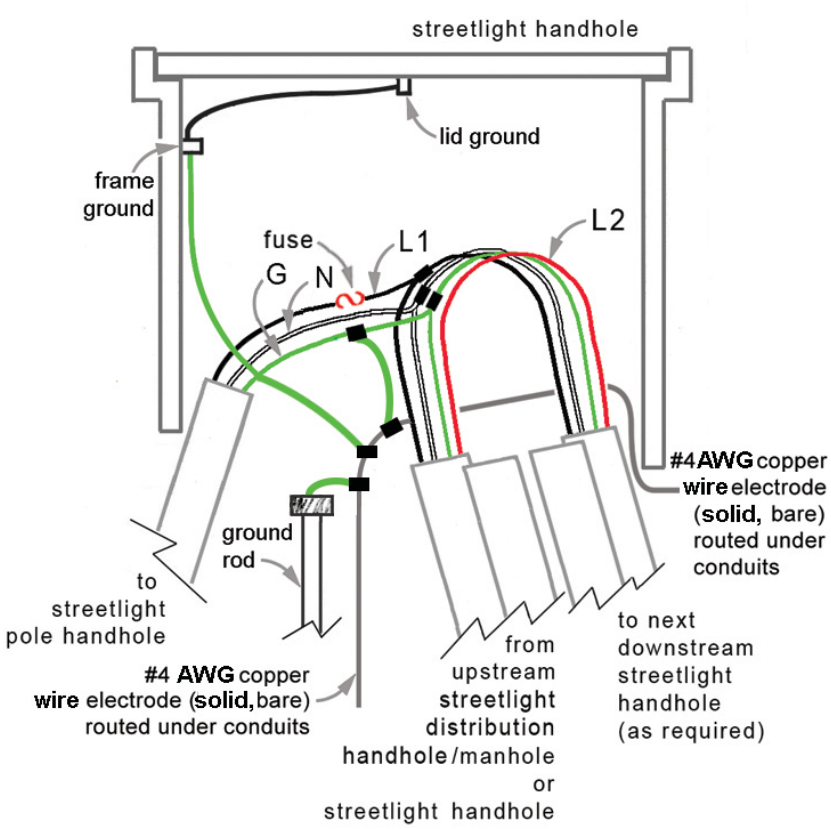

9. Grounding and Bonding Retrofit of Existing Streetlights

9.1 Discussion

When adding, repairing, or replacing streetlights on an existing circuit, it is necessary to retrofit the existing handholes and poles that are part of that system to ensure a properly grounded and bonded system.

If a spare conduit is present, install a properly grounded and bonded system as detailed in Sections 7 and 8.

If any components of the grounding system are missing (ground rod, two hole set screw lug in streetlight pole, etc.) or damaged refer to Section 9.2 below or contact Engineering in order to repair or replace them.

9.2 Retrofit of existing streetlights with green equipment grounding conductor already present. See Figures 8.1, 8.2 and 8.3.

Confirm that the green equipment grounding conductor has been routed from the streetlight distribution handhole and throughout length of the circuits present.

At the streetlight distribution handhole, confirm the grounding conductor is bonded to the neutral wire and a ground rod.

Confirm all metallic components along the streetlight circuit including ground rods, handhole covers, metal streetlight poles, and streetlight luminaires are connected to the grounding conductor.

Finished installation should be connected per Figures 8.1, 8.2 and 8.3.

10. Material List

Description	Stock Number
FUSE HOLDER, 600 V	682353
FUSE, see fusing schedule SL12-1/NSL-10	–
TERMINAL LUG, aluminum, #14-1/0, ILSCO	651314
TAPE, pressure sensitive 3/4″	736655
GROUND ROD, 5/8″ x 8′	564238
GROUND ROD STUD, 5/8″	564604
GROUND ROD COUPLING, 5/8″	564074
GROUND ROD CLAMP, 5/8″	564012
BOOT, insulating, type L, buss	682360
CONDUIT, Schedule 80 PVC, 2″	738741
CONDUIT, steel, 2″	734741
ELBOW, steel, 2″	734809
MULTIPLE CONNECTOR, 3 position	678703
MULTIPLE CONNECTOR, 4 position	678707
MULTIPLE CONNECTOR, 6 position	678713
MULTIPLE CONNECTOR, 8 position	678715
TERMINAL LUGS, #6	678695
WIRE, copper-clad steel	012702
LUG, two hole, set screw	651314
BUSHING, grounding, insulated, 2″	751531
WIRE, solid bare #4 AWG	610208

11. References

SCL Construction Standard 0233.05; "Secondary Handhole Grounding"

SCL Construction Standard 1730.00, "Streetlight Fusing Schedule"

SCL Design Standard 9702.30, "Grounding and Bonding, Fundamentals and Detailed Requirements"

NEC Article 250, "Grounding and Bonding;" NFPA 70 2008 Handbook; National Electric Code; 2008

Soares Book on Grounding and Bonding; International Association of Electrical Inspectors; 2004

12. Sources

Barnett, John; SCL Engineer; subject matter expert (john.barnett @seattle.gov)

Deutscher, Cary; SCL Engineer; subject matter expert (cary.deutscher @seattle.gov)

Hanson, Brett; SCL Standards Engineer, subject matter expert and co-originator of 1710.50 (brett.hanson@seattle.gov)

IEEE 100-2000; The Authoritative Dictionary of IEEE Standards Terms; Seventh Edition; IEEE; 2000

IEEE C2-2012; National Electric Safety Code (NESC); 2012

Lu, Curtis; SCL Standards Engineer, subject matter expert and co-originator of 1710.50 (curtis.lu@seattle.gov)