Ceiling Channel for In-Building Vaults

1. Scope

This standard provides the requirements for the installation of ceiling channels in new or retrofit in-building vaults.

2. Application

This standard provides direction to Seattle City Light (SCL) crews and contractors about how to properly install ceiling channels in Network and Looped Radial vaults to support ceiling-mounted equipment including Integrated Web Channel Bus (IWCB) or trapeze-type cable supports.

3. Installation

3.1 Spacing

Channels shall be spaced on 22-in centers across the ceiling of all in-building vaults including IWCB vaults. Channel shall be installed level so that the threaded rods hang vertically when attached with standard channel nuts. Channels shall be installed with the channel ends 6 to 12 inches away from the vault walls. Confirm direction of channels with SCL engineer prior to construction.

3.2 New Construction

Concrete insert channels shall be embedded in the ceiling concrete during construction with the bottom of the channel flush with the ceiling surface per manufacturer's instructions. See Figure 3.2.

Concrete inserts shall be 12-gauge, galvanized Unistrut P3200 series (1-5/8 in x 1-3/8 in) or equal.

Figure 3.2. Concrete Insert

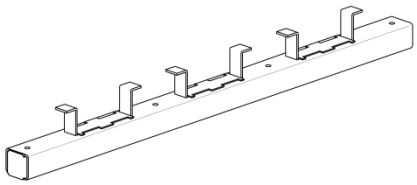

3.3 Retrofit Option

For the following conditions and with written approval from SCL Engineering prior to construction, channel may be surface mounted on the vault ceiling using one of the following methods:

3.3.1. Attachment to Steel Framing

Secure channel to building construction steel with 1/2-in galvanized steel bolts, square flat plate washers with tabs (Unistrut P2864 Stock No. 720658 or equal), nuts and lock washers. Place flat washers on the outside of the channel and place lock washers under the nut or bolt head on the opposite side of the connection assembly. The support near the end of the channel shall be within 2 inches of the end of the channel. Connect each channel to the wall on both ends. See Figure 3.3.1.

Channel shall be 12-gauge galvanized Unistrut P1000 series (1-5/8 in x 1-5/8 in) or P3000 series (1-5/8 in x 1-3/8 in) or equal.

Figure 3.3.1. Attachment of Channel to Steel Framing

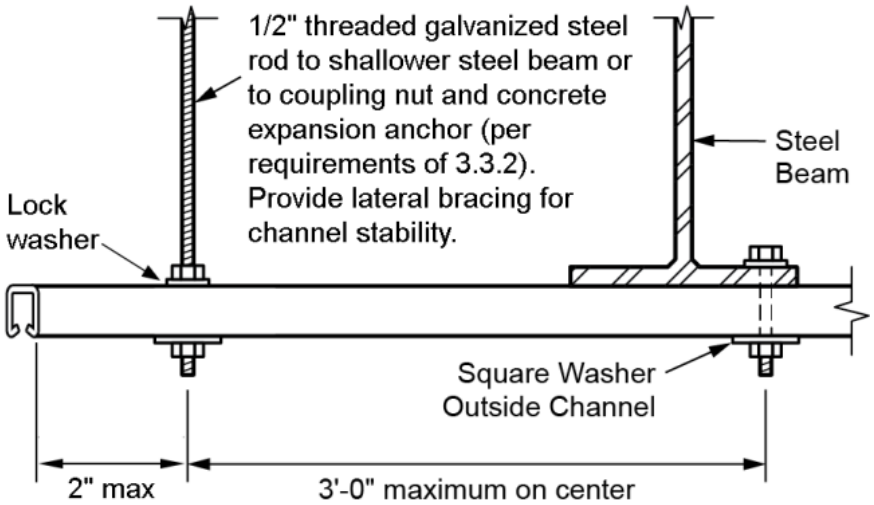

Provide lateral bracing for channels to include the following:

- A minimum of 2 bracing locations per channel providing longitudinal restraint
- A minimum of 2 bracing locations per channel providing perpendicular restraint
- A sufficient number of bracing locations to result in a maximum distance of 9 feet between perpendicular restraints.

Lateral bracing can be accomplished by a combination of the following methods (Unistrut products may be substituted with equal):

1. Install a bolted connection to a steel beam flange as shown in Figure 3.3.1 (provides perpendicular and longitudinal restraint, as well as vertical support).
2. Extend channels to connect to concrete wall (provides perpendicular and longitudinal restraint, as well as vertical support). Use Unistrut P1025 or P1281 right angle fitting, ½-in bolt, P1010 channel nut if connecting to open face of channel, and ½-in expansion anchor into concrete.
3. Provide diagonal bracing up to structure (provides restraint in direction of brace). Use Unistrut P1000 or P3000 series at 45 degrees maximum from horizontal, P1843 adjustable hinges, ½-in bolts, P1010 channel nuts if connecting to open face of channels, and ½-in expansion anchor into concrete or ½-in bolt to top of steel beam.
4. Provide a perpendicular restraint location for up to 4 lines of ceiling channels, following these steps:
   a. Install a perpendicular bracing channel immediately above the ceiling channels. Use ½-in bolts for the connection between perpendicular channels and ceiling channels.
   b. Connect the bracing channel at each end to a wall or with diagonal bracing per items 2 and 3 above.

3.3.2. Attachment to Existing Concrete

Secure channel to existing concrete using stainless steel, 1/2-in x 5-1/2-in expansion anchors (Hilti Kwik Bolt 3, 316 stainless steel, Hilti Item No. 282571, SCL Stock No. 780143) at a maximum of every 3 feet along the length of the channel.

The anchor closest to the end of the channel shall be installed within 2 inches of the end of the channel.

Locate embedded conduit, reinforcing bars (rebar), and prestressing strands in concrete with non-destructive testing prior to drilling holes for anchors.

Do not drill through existing rebar or conduit or within 3 inches of prestressing strands.

Expansion anchors shall be embedded in the ceiling to a minimum depth of 2-1/4 in.

Channel shall be 12-gauge galvanized Unistrut P1000HS (1-5/8 in x 1-5/8 in) or P3000 HS (1-5/8 in x 1-3/8 in) with 9/16-in holes on 1-7/8 in centers, or equal.

Washers shall be square flat plate style with tabs (Unistrut P2864 Stock No. 720658 or equal): 1-5/8-in square x 1/4-in thick with 9/16-in hole.

See Figure 3.3.2.

Figure 3.3.2. Attachment of Channel to Existing Concrete

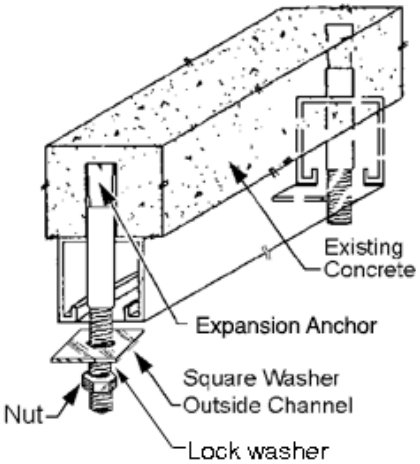

Note: Each expansion anchor installed in concrete shall be proof tested for a load of 1,250 pounds. Tests shall be documented in writing and signed off by a registered Professional Engineer licensed in the State of Washington.

4. References

Hanson, Brett; SCL Standards Engineer and originator of 0257.06 (brett.hanson@seattle.gov)

Kohashi, Owen; SCL Civil Engineer and subject matter expert for 0257.06 (owen.kohashi@seattle.gov)

SCL Construction Standard NCI-190 (canceled); "Ceiling Channel for Network Vaults"