Requirements for Duct Banks in the Public Right-of-Way

1. Table of Contents

2. Scope . . . 2
3. Application . . . 2
4. Location . . . 2
5. Duct Bank Construction . . . 4
   5.1 Arrangement . . . 4
   5.2 Termination . . . 4
   5.3 Changes in Direction . . . 5
6. Conduits . . . 6
7. Trench . . . 6
8. Spacers . . . 6
9. Encasement . . . 6
10. Backfill . . . 7
   10.1 Types of Backfill . . . 7
   10.2 Requirements . . . 7
11. Identification . . . 7
12. Inspection . . . 8
13. Communications . . . 8
14. Additional Conduits . . . 8
15. References . . . 8
16. Sources . . . 9

2. Scope

This standard provides the general requirements for the construction and installation of duct banks in the public right-of-way within the Seattle City Light (SCL) service territory. This includes system duct banks of more than two conduits and primary service duct banks with only two conduits.

Job specific requirements are not covered in this standard. Refer to the SCL Requirements Letter for job specific requirements.

3. Application

This standard provides direction to SCL crews and contractors about where and how to properly install duct banks in the public right-of-way.

For cable and conduit installation on private property, refer to SCL 0224.05.

For secondary conduit installations in the right-of-way, refer to SCL 0224.07.

4. Location

Duct banks shall conform to Figures 4.1 and 4.2.

4.1 Depth

A minimum of 3 feet of cover above a duct bank is required between street intersections. A minimum of 4 feet of cover is required at street intersections. Cover shall not exceed 6 feet unless specified by SCL engineer.

4.2 Alignment

Center line of the duct bank shall be located 15 feet from center line of street on either side of the street unless otherwise specified by the SCL engineer.

Figure 4.1. General Duct Bank, End View

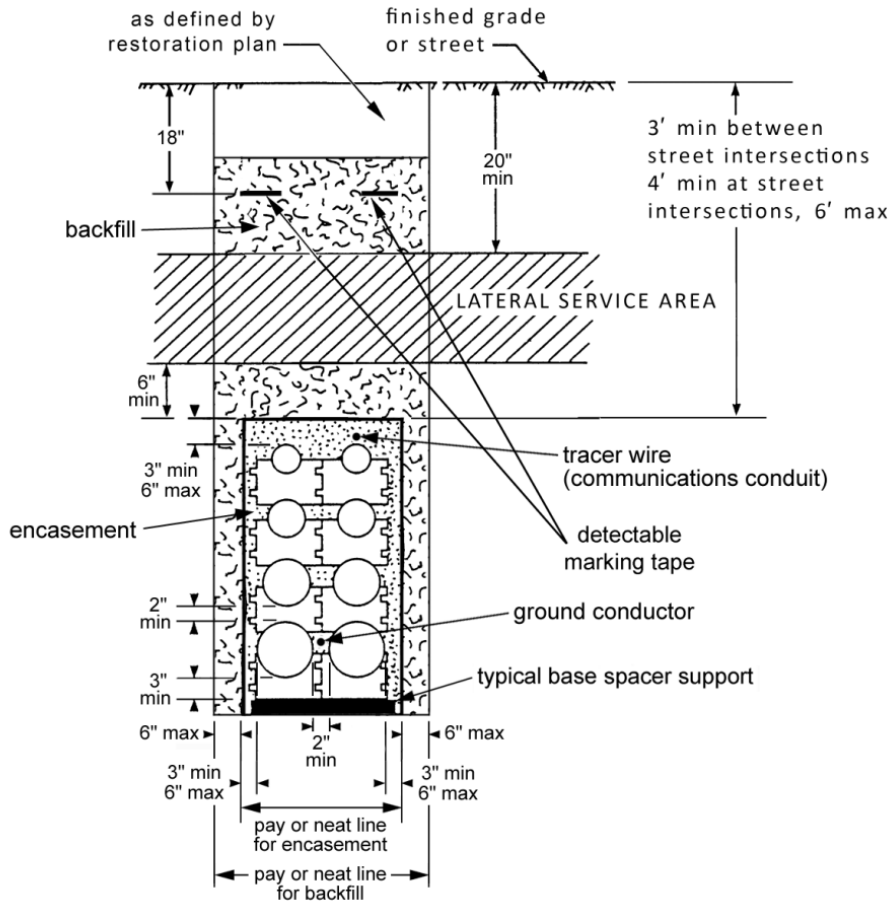

Figure 4.2. General Duct Bank, Side View

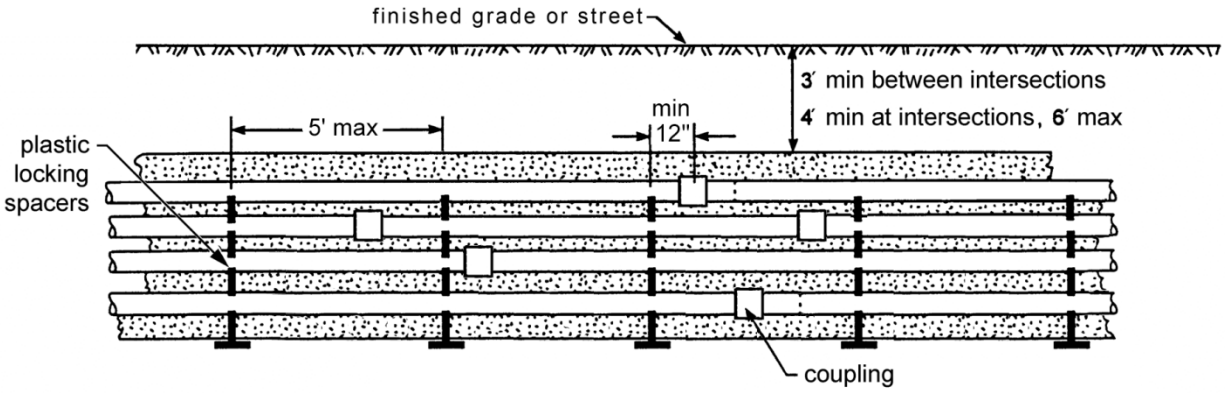

5. Duct Bank Construction

5.1 Arrangement

5.1.1 Transposition

Ducts shall NOT be transposed between vaults.

5.1.2 Numbering

The ducts shall be numbered separately by type; service ducts together and system ducts together. The numbering method shall be as follows:

For ducts running east-west, count from north to south and from top to bottom.

For ducts running north-south, count from west to east and from top to bottom.

Example shown in Figure 5.1.2.

Figure 5.1.2. Duct Numbering Example

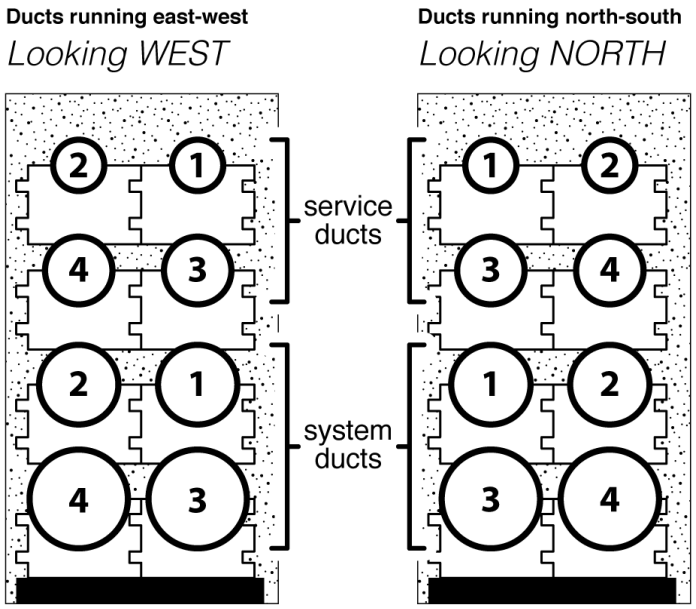

5.2 Termination

5.2.1 Permanent

For permanent termination details, see SCL U2-11.3/NDK-30.

The first two feet of all conduits exiting the vault shall be vertically and horizontally perpendicular to the vault face.

If there are multiple duct banks or direct-buried conduits entering horizontally and at right angles to each other in the same corner of a vault, manhole or handhole, they shall enter at different elevations so they are vertically offset to the other.

All duct terminations into vaults, handholes, etc., shall be done by core drill.

Provide and install PVC-type DB-120 conduit end bells flush with the interior walls on all conduits entering the vault. The conduits shall be grouted both inside and outside of the vault. See SCL 7055.09 for approved manufacturers.

5.2.2 Temporary

Install reinforcement steel dowels whenever placing of encasement is to be delayed beyond initial set.

Spacers shall be placed as close to the temporary termination as possible in order to maintain proper conduit spacing.

Lower conduit shall be flush or protrude beyond the conduit above it to ease reattachment.

See Figure 5.2.2 for details.

Figure 5.2.2. Temporary Termination

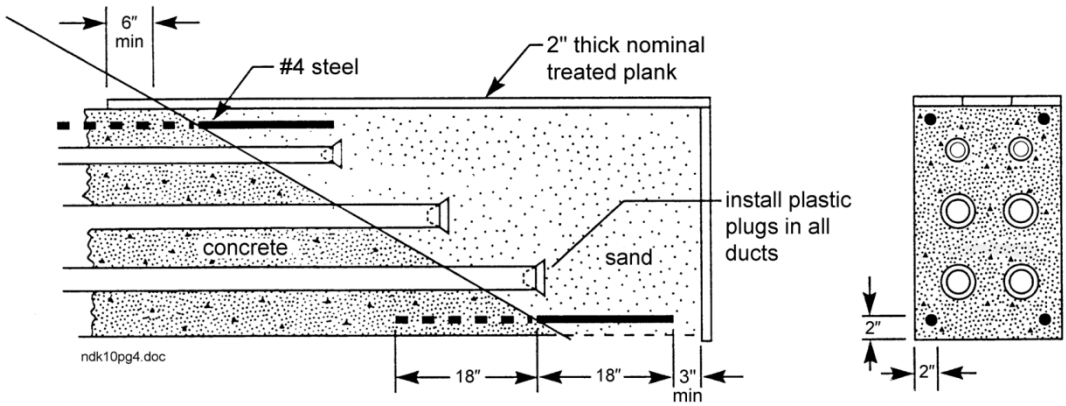

5.3 Changes in Direction

Any changes in direction must consist of only one type of conduit material and all bends must have the radius of the largest conduit. See Table 5.3 for minimum bend radius requirements.

For a horizontal change in direction, the PVC conduit may be cold-formed, provided the deflection does not exceed 15 degrees per 10-ft section.

For standard wall fiberglass conduit, lateral deflection shall not exceed 1 ft per 20-ft section.

Each conduit bend shall be mandreled prior to placement and encasement. See SCL U2-11.40/NDK-40.

Table 5.3. Minimum Bend Radius

Conduit (in)	System[1, 3] (in)	Service[2, 3] (in)
2.5	–	24
3	144	36
4	144	48
5	150	60
6	144	60

Notes:
1. PVC conduit is not allowed for system conduit bends.
2. Bending PVC conduits with heat is not allowed.
3. Typical unless otherwise specified by SCL engineer.

6. Conduits

Schedule 40 PVC, rigid steel or fiberglass conduits can be used in duct banks as specified in Table 6.

Table 6. Allowed Conduit Materials

	Schedule 40 PVC (SCL 7015.05)	Rigid Steel (RGS) (SCL 7050.05)	Fiberglass (SCL 7025.05)
System – Straight	Yes	Yes	Yes
System – Bend	No	Yes	No[1]
Service – Straight	Yes	Yes	Yes
Primary Service – Bend	No	Yes	No[1]
Secondary Service – Bend	No[1]	Yes	Yes

[1] Typical unless otherwise specified by SCL engineer.

Conduits entering an in-building vault and/or within a building shall be steel.

Conduits exposed under aerial structures (bridges, etc.) shall be steel and effectively grounded.

Factory and field straight-cut ends shall be chamfered throughout the duct run.

7. Trench

The bottom of the trench shall be free of debris and fine-graded by hand to remove sharp, embedded rocks and loose stones over 1/2 inches in size. Or, the trench shall be over-excavated and replaced with bedding material to cover protruding rocks and stones by a minimum of 2 in. The bottom shall be graded even. Bedding material shall be sand.

8. Spacers

Spacers for conduit separation shall be plastic lock-type (see SCL 7015.80) of such configuration to give the required separation between conduit and earth, as shown in Figure 4.1.

Horizontally, spacers shall be placed 5 ft apart in both straight and bending sections of duct banks and a minimum of one foot away from any coupling, fitting or end bell, as shown in Figure 4.2.

Base spacers shall be used to obtain clearance to subgrade material under the conduit for the placement of the 3-in minimum of encasement.

Base spacers may also be used to obtain 3-in side cover of conduit in bends.

Two-inch concrete blocking, twice the area of the foot, shall be provided under the base spacers.

Secure conduit to spacers in order to prevent floatation and deflection during encasing.

9. Encasement

Conduit encasement is required if the conduits used are for cable rated 600 V or higher.

The encasement shall be red High Strength Fluidized Thermal Backfill (HSFTB). HSFTB is a concrete mix and is the only allowed material for encasement.

- Refer to Material Standard 7150.00 for HSFTB requirements.
- Refer to Construction Standard 0226.06 for HSFTB installation.
- Allow 48 hours to cure prior to pulling cable.

Forming is required for encasement:

- No forming or shoring structures shall be left in the trench after encasement.
- Metallic leave-in-place type forms may be allowed with permission of an SCL engineer.

The encasement shall be a minimum of 3 in and a maximum of 6 in around all conduits in a duct bank.

The encasement shall end before the elbow of the conduit riser.

Figure 9. Encasement at the Conduit Riser

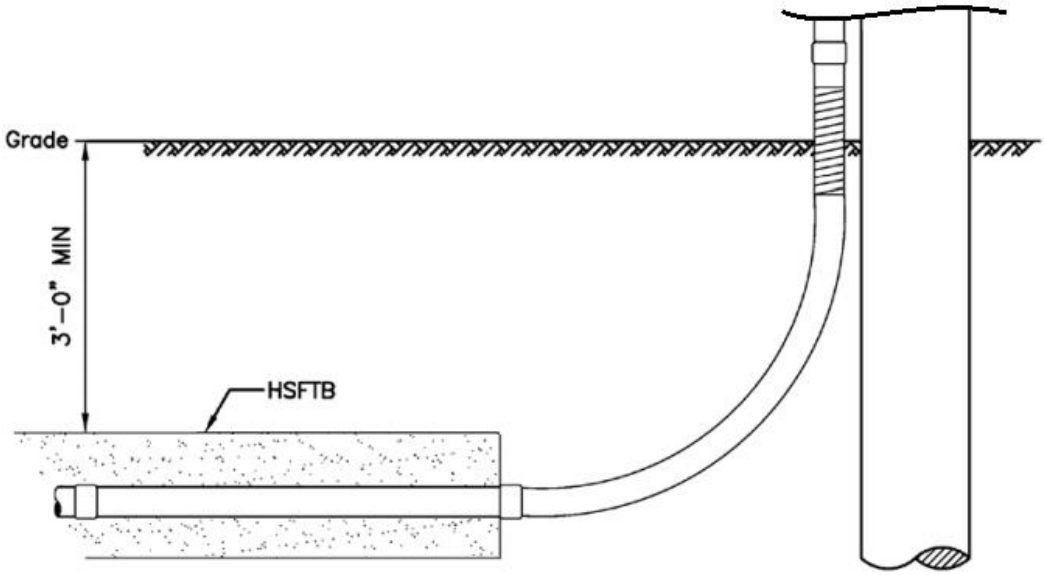

10. Backfill

10.1 Types of Backfill

Low Strength Fluidized Thermal Backfill (LSFTB) Refer to SCL 7150.00 for LSFTB specification.

Controlled Density Fill (CDF) – A self-compacting material used for backfill. Where CDF is used for backfill, comply with current City of Seattle standard specifications.

10.2 Requirements

System duct bank backfill shall be Low Strength Fluidized Thermal Backfill (LSFTB), and primary service duct bank backfill shall be CDF, unless otherwise specified by an SCL engineer.

Do not mix low strength and high strength FTB.

LSFTB shall be poured on top of set HSFTB.

11. Identification

Install two 3-in-wide red detectable underground marking tapes over the corners of the duct bank at 18 in below the finished grade.

12. Inspection

Inspections shall be done by Seattle City Light. Duct bank installations require that the inspection be done when laying conduit, prior to pouring encasement and prior to pouring backfill. Additional inspections may be done for more complex installations. Inspection approvals are required prior to moving on to the next stage of duct bank construction. An inspection may include verification of proper construction, adherence to engineer design and SCL standards and conduit mandreling and cleaning. See SCL U2-11.40/NDK-40 for mandreling and cleaning details.

13. Communications

On all new underground installations of duct banks, two 4-in PVC conduits shall be installed for communication uses. The two communication conduits shall be placed above the power conduits in looped radial duct banks and above the 2-in conduits in network duct banks. A 4 x 4 x 4 handhole is required for splicing when specified by the SCL engineer. If the communication conduits leave the duct bank, they shall be encased in red HSFTB and an orange, #12 stranded copper tracer wire shall be attached directly above one of the two communication conduits using electrical tape or cable ties.

14. Additional Network Conduits

On all new underground network installations of duct banks, two 2-in PVC conduits shall be installed. The two conduits shall be placed below the communication conduits in network duct banks. The 2-in conduits are typically used for system grounds, vault lighting and vault discharge. If the bend radius is greater than 10 ft, the 2-in PVC conduit may be cold-formed to match the rest of the duct run. If the bend radius is less than 10 ft, RGS elbows are required.

The 2-in conduit shall be terminated with a coupling.

15. References

SCL Construction Standard 0224.05; “Requirements for Underground Services on Private Property”

SCL Construction Standard 0224.07; “Requirements for Secondary Conduits in the Right-of-Way”

SCL Construction Standard 0226.06; “Installation of Fluidized Thermal Backfill”

SCL Construction Standard U2-11.3/NDK-30; “Termination of Existing Duct Banks in New Vaults or Manholes”

SCL Construction Standard U2-11.40/NDK-40; “Mandreling and Cleaning Of Ducts and Conduits”

SCL Material Standard 7015.05; “Schedule 40 PVC Conduit and Fittings”

SCL Material Standard 7025.05; Fiberglass Conduit and Fittings, Standard-Wall, Five-Inch IPS

SCL Material Standard 7050.05; “Zinc-Coated Steel Conduit and Fittings”

SCL Material Standard 7150.00; “Fluidized Thermal Backfill”

SCL Material Standard 7015.80; “Conduit Spacers for PVC and FG Conduit”

16. Sources

City of Seattle Plans for Municipal Construction; City of Seattle, 2011 edition

Edwards, Tommy; SCL Inspector and subject matter expert for 0222.02, (tommy.edwards@seattle.gov)

Lu, Curtis; SCL Engineer and originator of 0222.02 (curtis.lu@seattle.gov)

SCL Construction Standard NDK-10 (canceled) “Installation of Nonmetallic Conduit with FTB Concrete Encasement”

SCL Construction Standard U2-11 (canceled) “Installation of Nonmetallic Conduit with Concrete or FTB Encasement”

Stewart, Bob; SCL Inspector and subject matter expert for 0222.02, (bob.stewart@seattle.gov)

Youngs, Rob; SCL Inspector and subject matter expert for 0222.02 (rob.youngs@seattle.gov)