Scada-Mate Primary Switch, 600 A

1. Scope

This standard covers the City Light-Specific information necessary for installing a Scada-Mate primary switch on a wood pole. This standard is intended to be used in conjunction with the manufacturer's instructions.

Switch energization and operation information are outside the scope of this document.

2. Application

This standard provides direction to SCL crews for the installation of a Scada-Mate switch on a wood pole. The switch consists of three compatible units: a switch, an automatic switch control unit, and a ground-level disconnect handle.

This standard is to be used in conjunction with S&C instruction sheets and other reference materials as noted in Section 4, Supporting Documentation.

3. Pre-Installation Preparation

It is recommended that a pre-construction meeting be held at least one month before installation among Engineering, Communications, Relay, and other relevant entities to review the project and resolve any questions prior to commencing work.

For all switches other than the first switch from the substation, the open/close status indicator will be located on the road side. To achieve this, the pole may need to be rotated.

Also before commencing work, crews should familiarize themselves with the information contained in the S&C instruction sheets for a Scada-Mate switching system and ground-level disconnect handle, as well as relevant SCL standards. Further, it is

expected that the work order be reviewed in advance for job-specific details. It is recommended crews have the following resources on hand:

- S&C Scada-Mate Switching Systems Installation and Operation, Instruction Sheet 768-500
- S&C Omni-Rupter Switches Installation and Operation, Instruction Sheet 765-510
- S&C Drawing ED-8096-S103, Scada-Mate Ground-Level Disconnect Handle, Reciprocating Type Mechanism for Upright Switch, ¾" Pipe
- S&C Descriptive Bulletin 1045-30, S&C 6801 Automatic Switch Control for Outdoor Pole-Mounted Gear
- S&C Specification Bulletin 1045-31; S&C 6801 Automatic Switch Controls
- **SCL 4501.55**; "29 kV, Three-Phase, Overhead, SCADA-Controlled Load Interrupter Distribution Switching Systems"
- **SCL 0451.01**; "Grounding Electrodes for Distribution Poles"
- Sensor Ratio Sheet (Yellow Sheet)
- Project-specific installation sketch

4. Requirements

The 120 Vac control power must come from a source opposite from the switch's voltage sensors.

The first switch from the substation shall have voltage sensors facing upstream toward the substation.

The open/close status indicator for the first switch from the substation can be on either side of the switch.

For all other switches in the system, the open/close status indicator shall be on the road side.

Normally Open tie switches shall have voltage sensors facing the backup source when the backup feeder has not been automated.

The switch shall be installed in the upright mounting configuration.

Key S&C documents should be provided with the switch. If not, they can be obtained from the manufacturer's website or Standards contact.

The control unit shall be fully programmed prior to switch installation.

Figure 4a. Scada-Mate Switch Complete Assembly

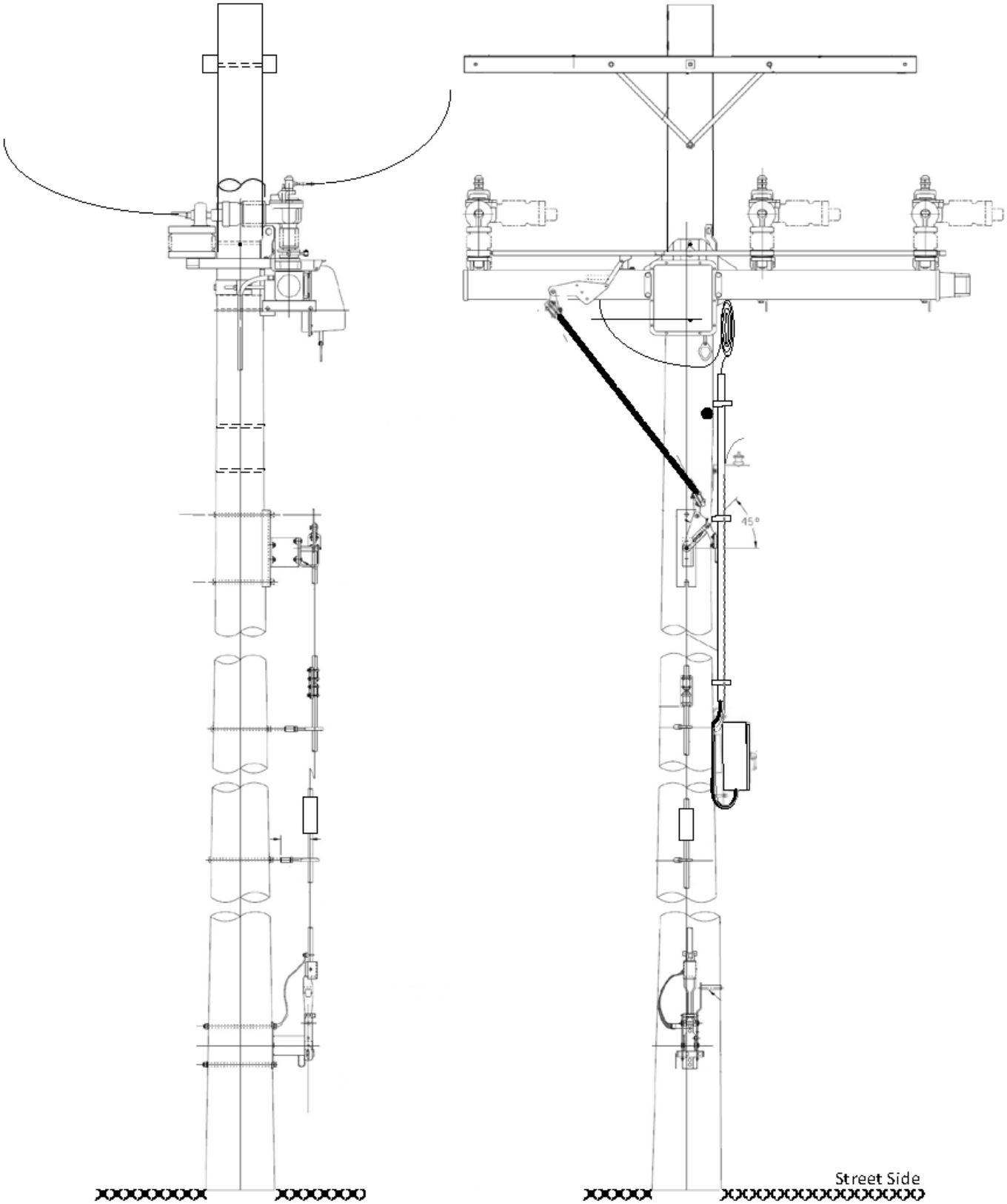

Figure 4b. Switch Mounting Configuration (Upright)

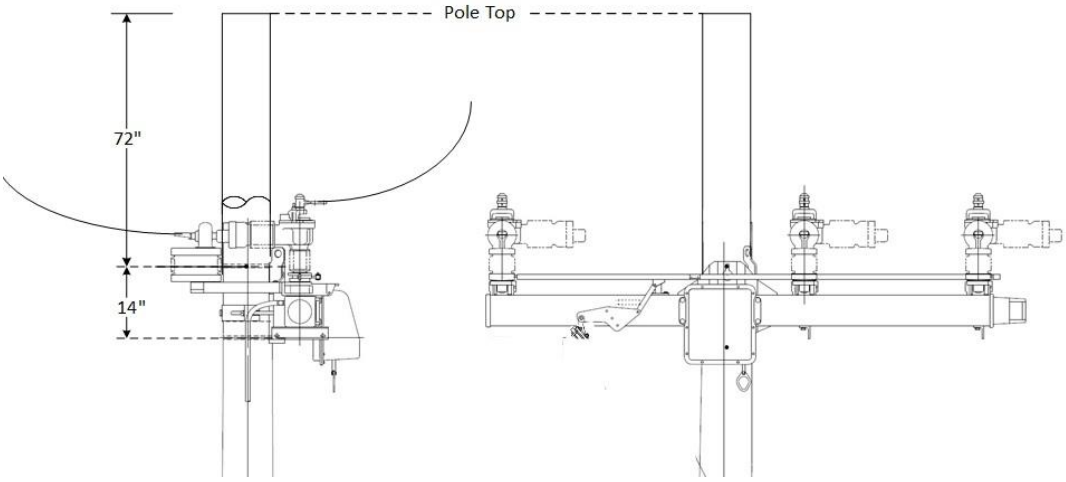

Figure 4c. Mounting Bracket Detail

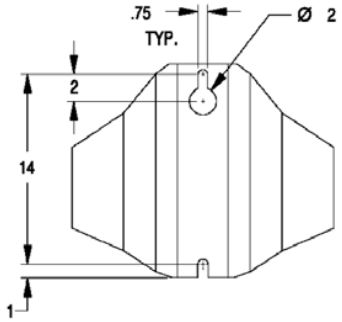

Figure 4d. Mounting Bracket and Pole Band Detail

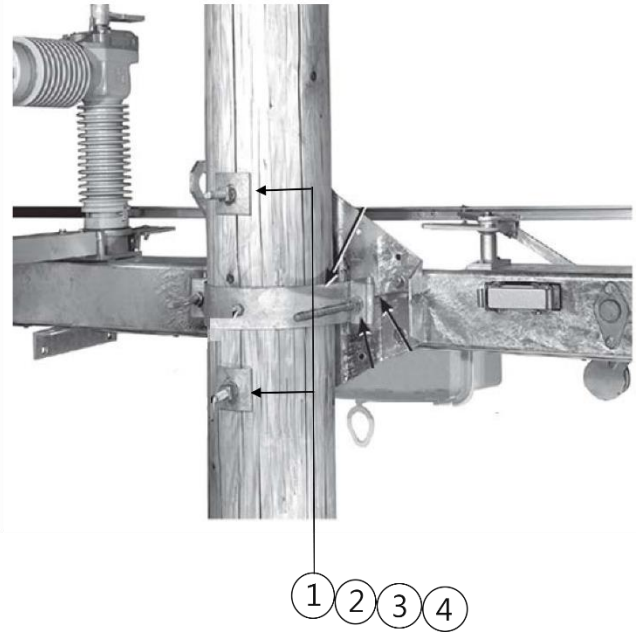

Figure 4e. Ground-Level Disconnect Handle Mounting

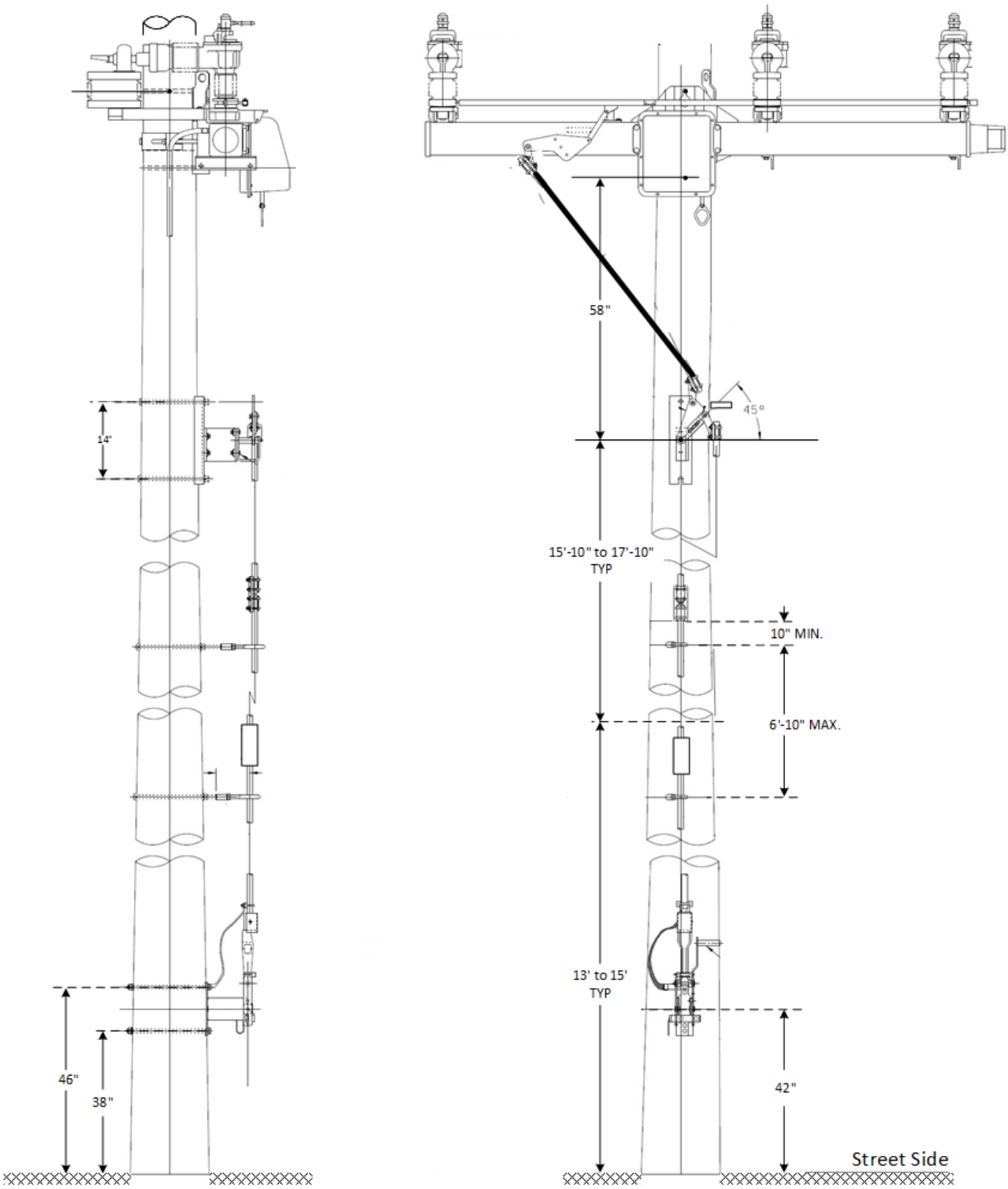

Note: Dimensions shown in Figure 4e are for a 50-ft pole with a 7.0-ft embedment.

Figure 4f. Automatic Switch Control Unit Mounting

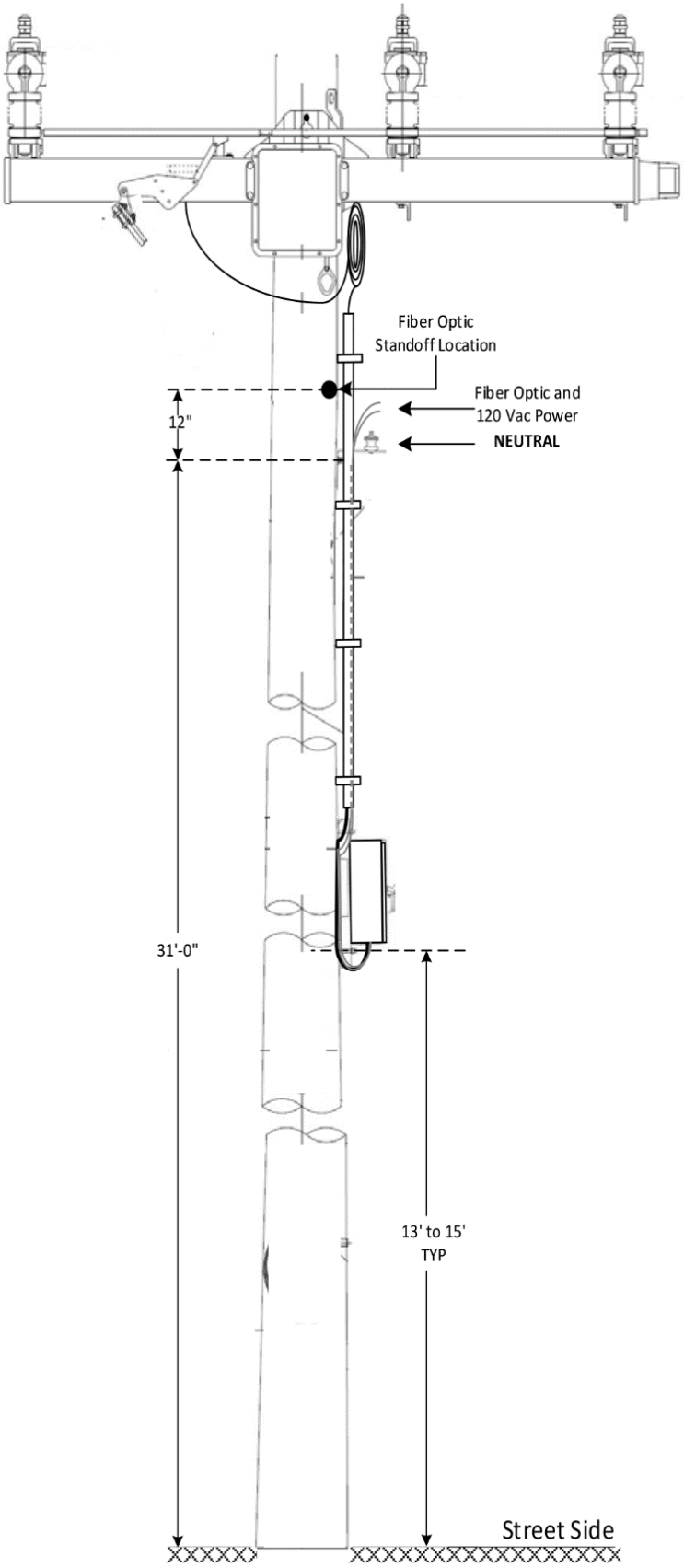
Fiber Optic
Standoff Location
Fiber Optic and
120 Vac Power
NEUTRAL
12"
31'-0"
13' to 15'
TYP
Street Side

Figure 4g. Jumper Detail

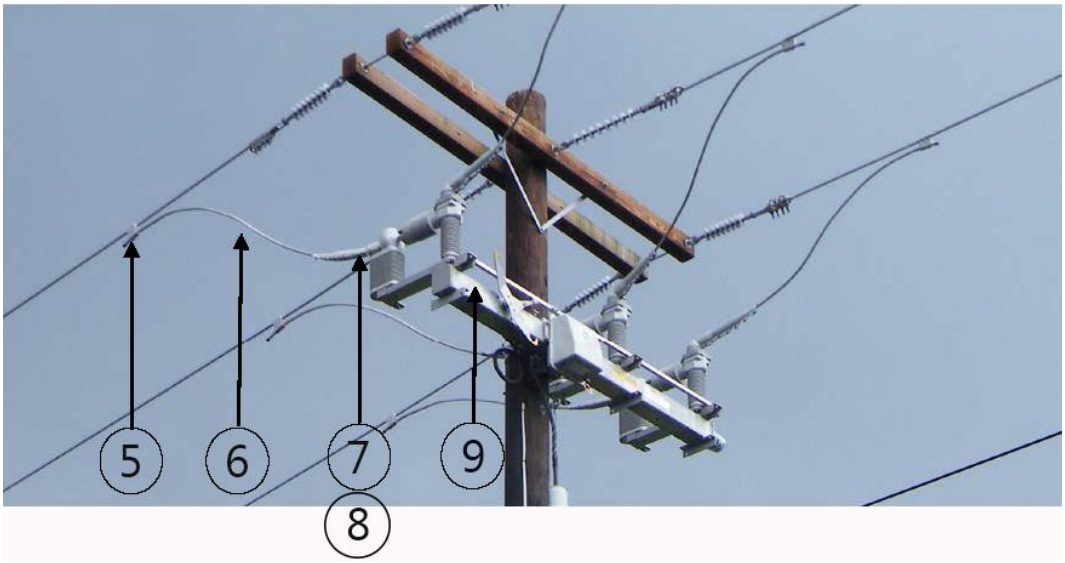

5. Construction Notes

5.1 General

The construction notes contained herein are supplementary to the manufacturer-supplied installation instructions and documentation and the project work sketch. See Section 3 for list of resources to have on hand before commencing installation, and contact the engineer with any construction issues that may arise. Do not make changes in installation without prior discussion and agreement.

The sections below are organized according to the relevant sections of the S&C Instruction Sheet 768-500. Each section will note any SCL-specific installation information that crews need to be aware of, as well as key information that may be found in the work sketch.

This standard assumes a 50-ft pole with a 7.0-ft embedment. See SCL 9105.26 for distribution pole embedment requirements. If the pole is determined to be too short to achieve the desired vertical clearances, a 55-ft pole may be needed. Contact Engineer in this case. Engineer will provide information on changes to installation (conduit lengths, etc.) resulting from using a longer pole.

Hinge and sensor terminal pads are currently provided with two galvanized steel bolts and nuts that are secured to the pad via plastic retainers. These should be removed from the terminal pad and replaced with SCL-supplied stainless steel hardware.

A joint compound such as Penetrox, shall be used between the switch terminal pad and the jumper terminal.

5.2 Installation of Ground-Level Disconnect Handle

5.2.1. General

Install disconnect handle at a height of 42 inches above ground level, on the face side of the pole, not on the street or sidewalk side.

If site conditions require the disconnect handle to be installed on the sidewalk side or the street side, installations must follow instructions as described in sections 5.2.2 and 5.2.3 of this standard respectively. Consult with Engineering for all other installation scenarios not covered herein.

Figure 5.2.1a. Mounting and Grounding of Ground-Level Disconnect Handle

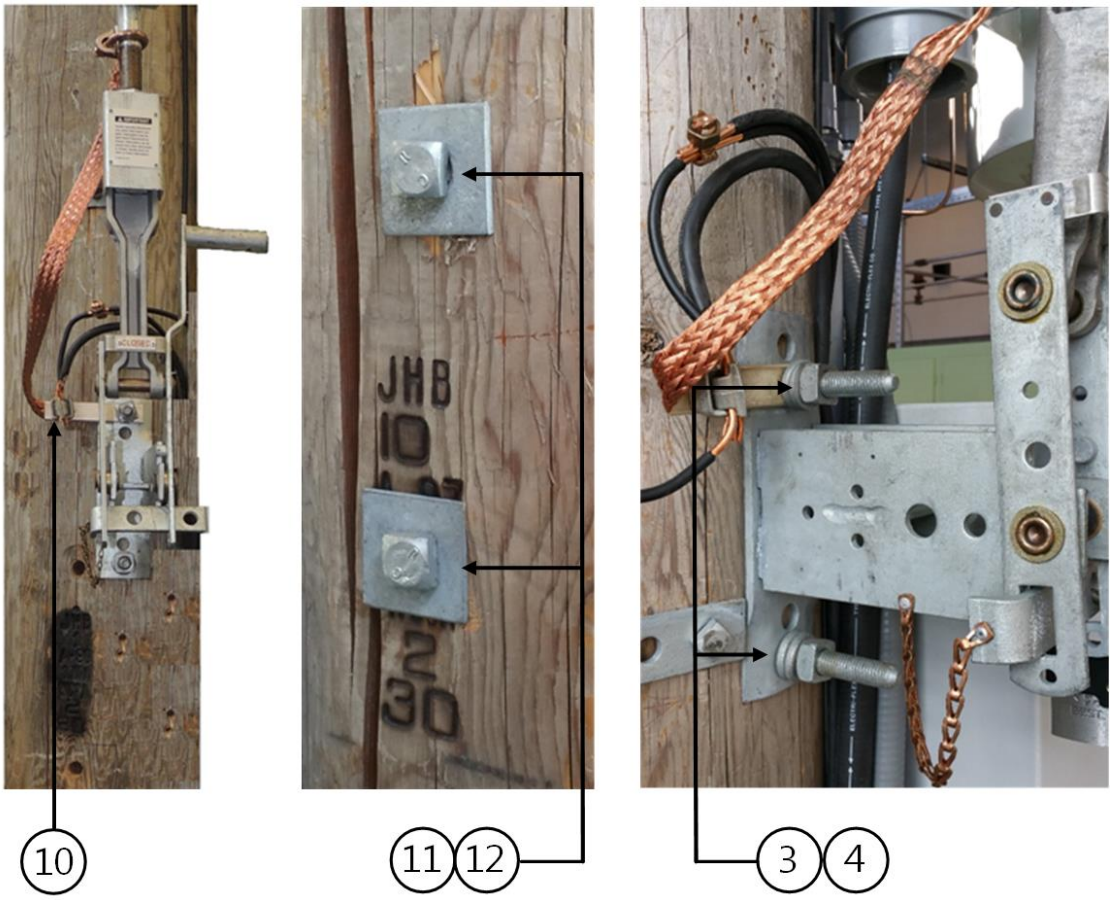

Figure 5.2.1b. Vertical Pipe and Attachments

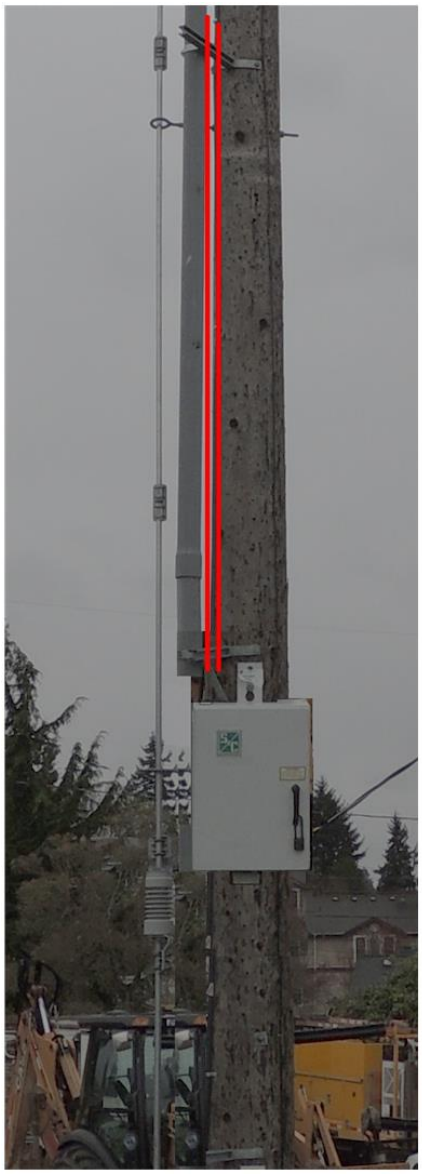

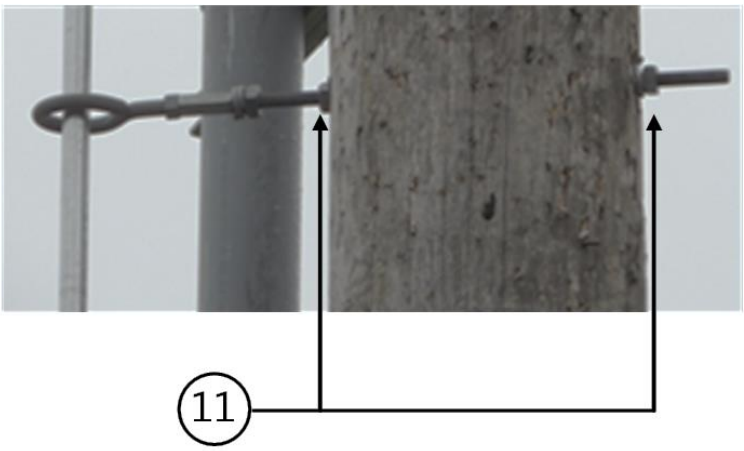

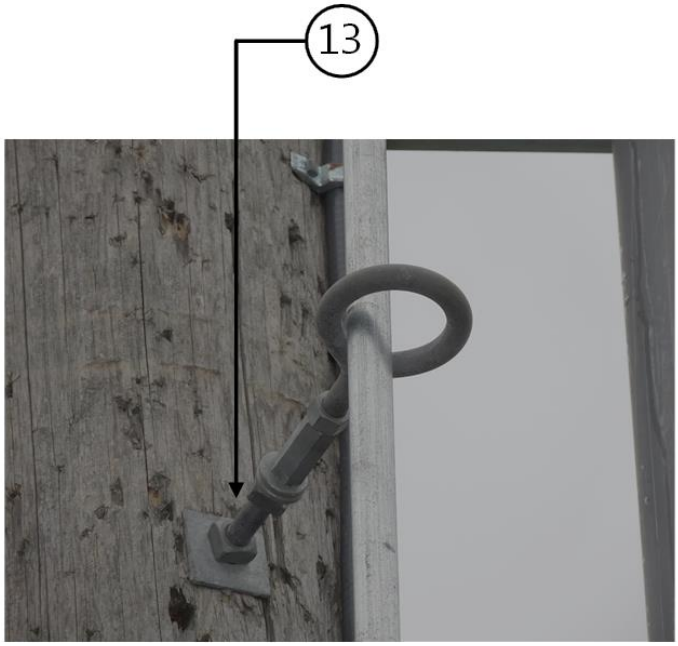

Figure 5.2.1c. Diagonal Fiberglass and Bell Crank Assembly

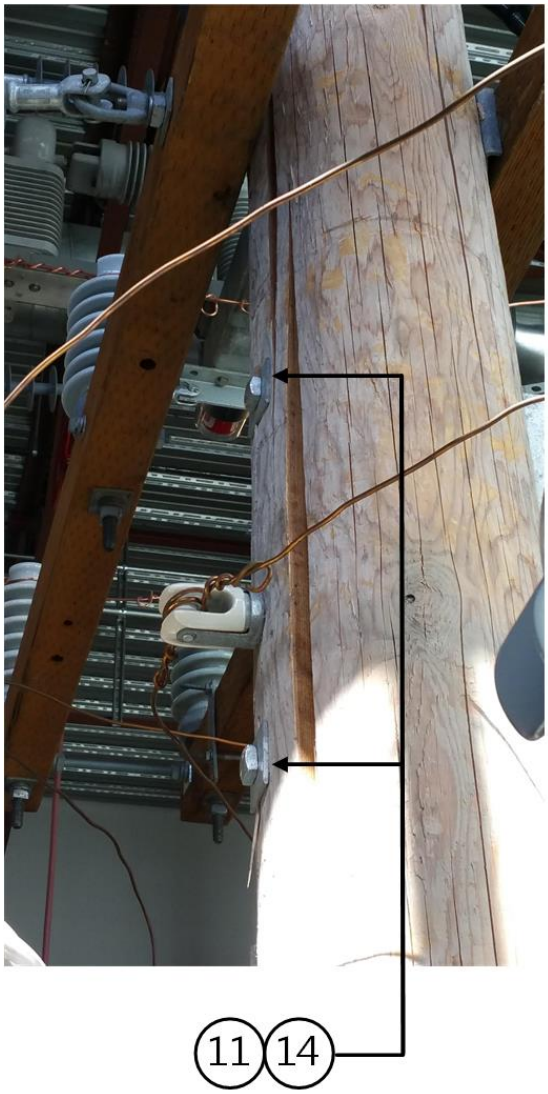

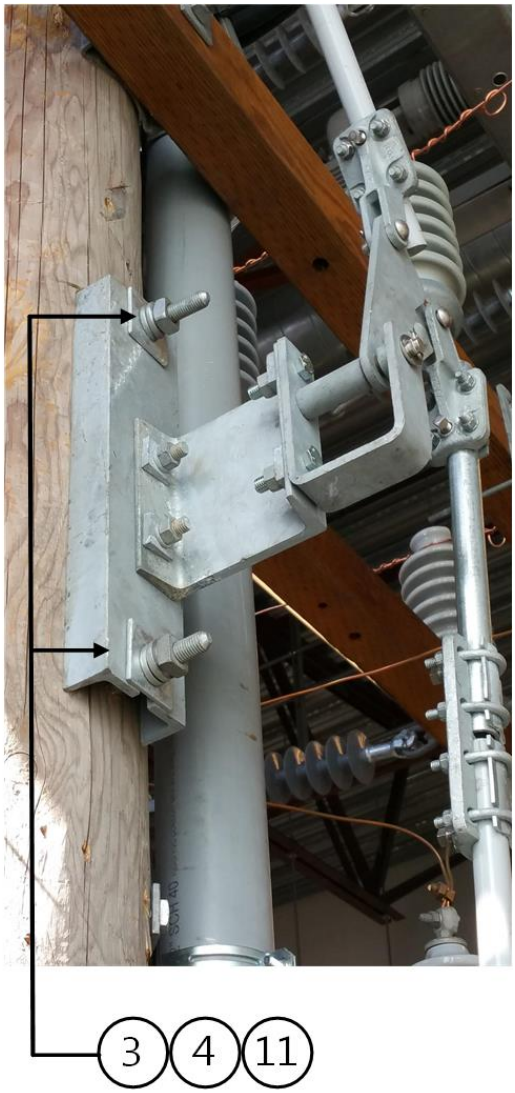

5.2.2. Sidewalk-Side Installation

On the sidewalk side **greater than** 2 ft from a pedestrian access route (PAR), the switch handle shall be installed at 42 inches above ground level given that:

- The ground-level disconnect handle, when in the down position, does not reduce the clear width of the PAR to less than 4 feet, exclusive of the curb.
- The ground-level disconnect handle, when in the down position, does not intrude more than 4 inches into a pedestrian circulation pat (PCP).

On the sidewalk side **less than** 2 ft from a PAR, the switch handle, when in the down position, shall be installed at a minimum of 10 ft above ground level.

If the handle protrudes farther than 4 inches into a pedestrian circulation path, it must be equipped with a warning device that is detectable by a vision-impaired person who navigates with a cane. The minimum clear width of the pedestrian access route shall still be provided. Contact Engineering to request installation of warning device.

The distance between the disconnect handle when in the down position and the PAR (sidewalk) shall be a minimum of 2 inches. See Figure 5.2.2.

Figure 5.2.2. Sidewalk-Side Installation

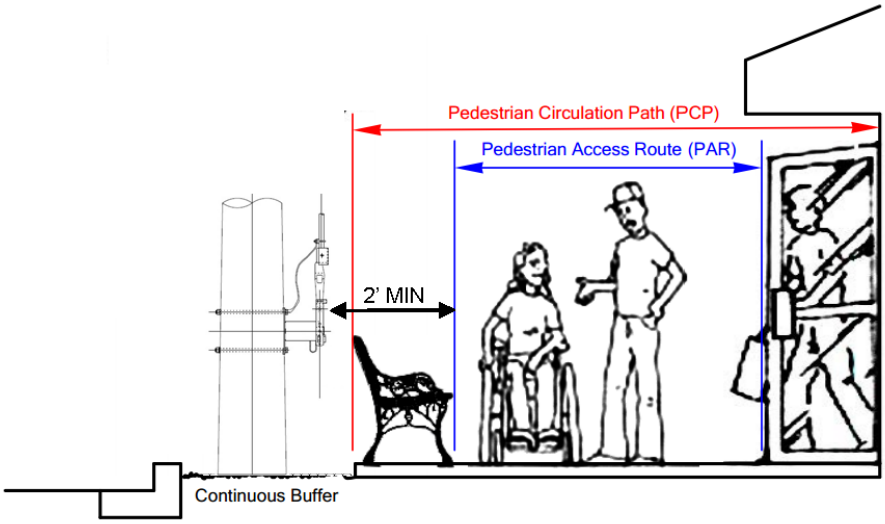

5.2.3. Street-Side Installation

On street side **greater than** 3 ft from the street, the switch handle shall be installed at 42 inches above ground level given that the ground-level disconnect handle, when in the down position, shall not intrude more than 4 inches into a pedestrian circulation path (PCP).

On street side **less than** 3 ft from the street, the switch handle, when in the down position, shall be installed at a minimum of 13–15 ft above ground level.

If the handle protrudes farther than 4 inches into a pedestrian circulation path, then it must be equipped with a warning device that is detectable by a vision-impaired person who navigates with a cane. The minimum clear width of the pedestrian access route must still be provided.

The distance between the disconnect handle when in the down position and the street (excluding the curb) shall be a minimum of 3 ft. See Figure 5.3.3.

Figure 5.2.3. Street-Side Disconnect Handle Installation

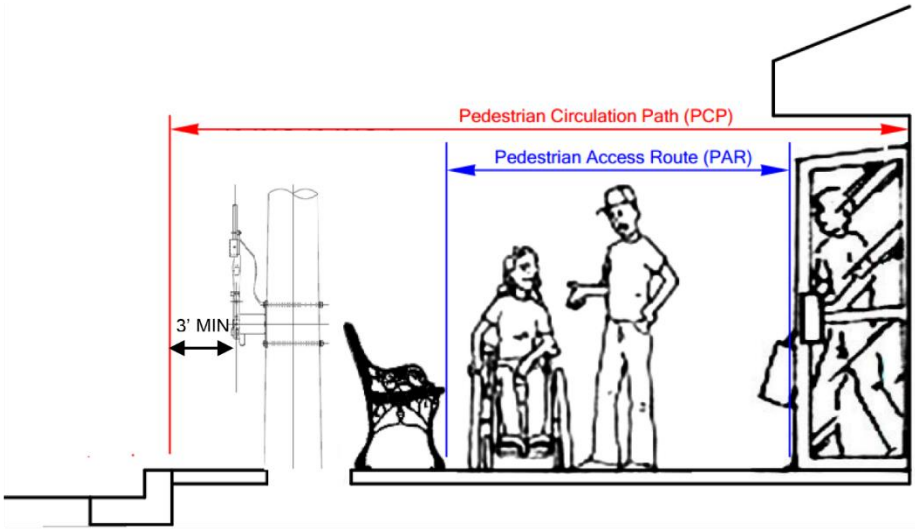

5.3 Switch Installation

The terminal pads of the switch have two counter bore (indents) to engage captivated bolts. Although SCL does not use captivated bolts, the indents are still there for this option. SCL uses two-hole flat terminal pads to connect the jumpers to the switch. Due to the indents, not all of the flat terminal surface will be in contact with the terminal pad on the switch. Per S&C, the indents do not affect the current rating of the switch.

Some Scada-Mate switches may come with 4741R2 connectors (see Figure 5.3). These connectors are similar to SCL Stock No. 661255 (S&C Catalog No. 4745). The Scada-Mate version of the connector, 4741R2, has plastic washers as well as connector bolts which are 1/4-in longer than the bolts used with the 4745 connector. The connector, bolts, and washers should be discarded.

Figure 5.3. 4741R2 Connector and Terminal Pad Comparison

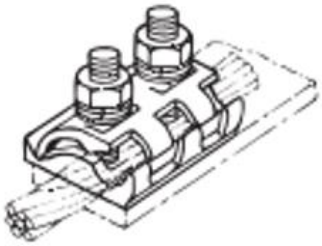

4741R2

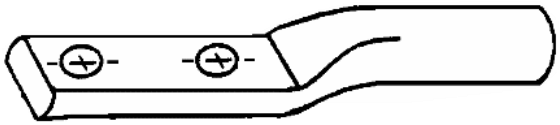

Terminal Pad

5.4 Automatic Switch Control Unit

Install the automatic switch control unit 13–15 feet above ground level, above the Cypoxy insulator of the disconnect handle assembly. For installation and operation instructions, refer to S&C Descriptive Bulletin 1045-30 and S&C Specification Bulletin 1045-31 and other relevant documentation that is supplied with the control unit. See Figure 5.4a.

Ensure that the Sensor Ratio Sheet (Yellow Sheet) for each switch is placed in the control unit document folder.

Coordinate a date with the Relay group to program control unit. This step requires Yellow Sheet information.

Verify that the switch control is energized from a 120 Vac source and the battery is connected.

The source (pole location, transformer, etc.) of the 120 Vac will be specified by the Engineer on the installation sketch.

The 120 Vac power should use #12 triplex. An acceptable alternative can be either 612220 or 612222.

When ready to plug in the control cord cable to the switch going to the controller, remove the dust cover and VS/CS shorting blocks. Store dust cover and shorting blocks in the back of the control unit for future use. See Figure 5.4a.

Stock spare 10A fuses (for 120 Vac power connection) inside the control box.

The S&C control cable socket at the bottom of the control unit is reversible and can be installed either way as needed depending on the orientation of the switch.

Coil excess control cable and attach to the switch hanger J-bolts via poly soft drawn wire. Do not coil the cable at other locations.

Install control, power, and fiber optics conduit as close to the pole as possible. Allow 4-1/2-in climbing space between the pole and the conduits.

Use 10-1/2 in standoffs when practical.

The fiber optics connection is performed by Communications.

Figure 5.4a. Control Unit Receptacle at the Switch Base

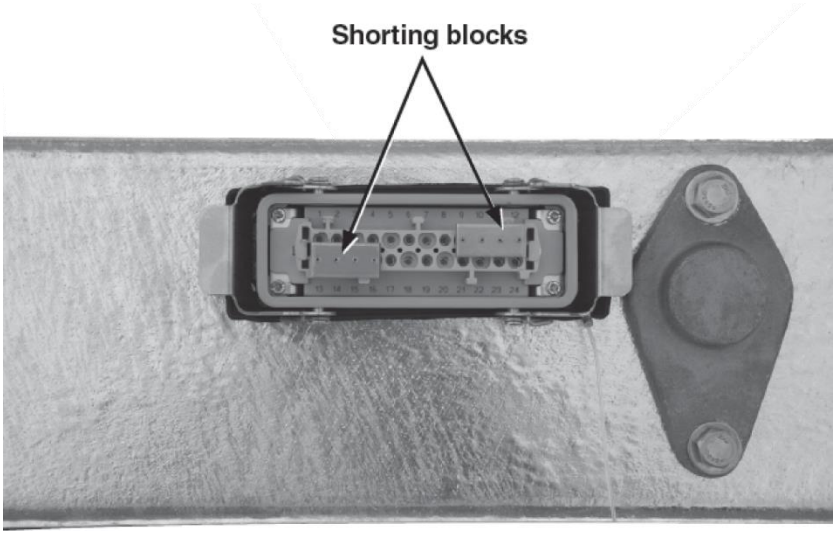

Use adjustable plastic tie straps to bundle the liquidtight conduits and the control cable together. The 120 Vac power cable will be triplex, not the receptacle style shown in Figure 5.4b, lower right photo.

Liquidtight conduit for power cable terminates at the existing knockout in the bottom of the control cabinet in front of the 10A supply fuse.

Figure 5.4b. Power and Control Cable Routing

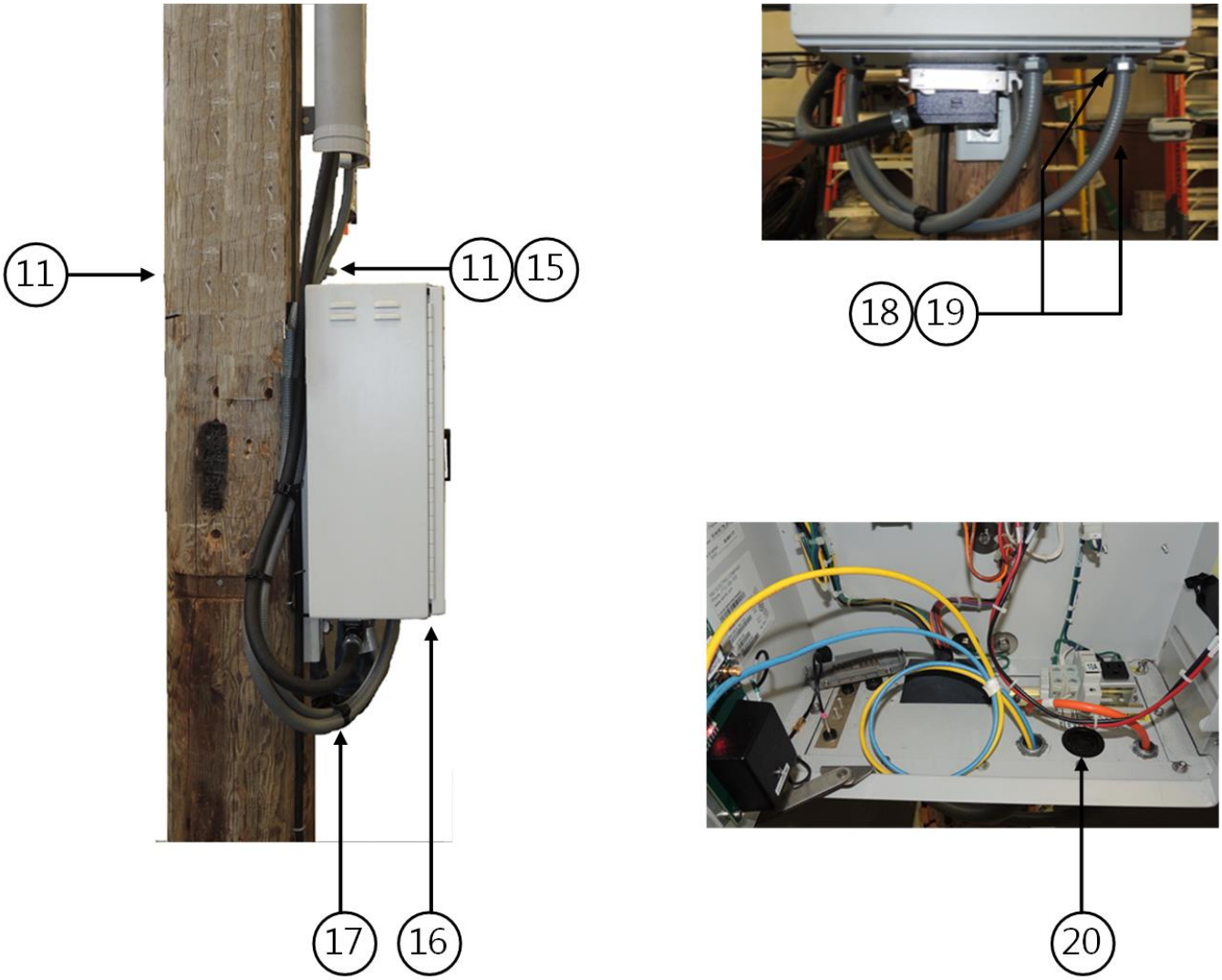

In Figure 5.4c, the bell ends shown in the upper left photo will be attached on both sides of the 3-1/2-in raceway conduit for the control cable. The bottom bracket installed above the control unit as shown in the lower right photo will have a brace. The remaining three brackets are not braced.

The only communications-related material included in this standard is 10 ft of 1/2-in PVC conduit. See Figure 5.4c, upper right photo. All other communications material and equipment is to be supplied and installed by Communications.

Figure 5.4c. Conduit and Attachments

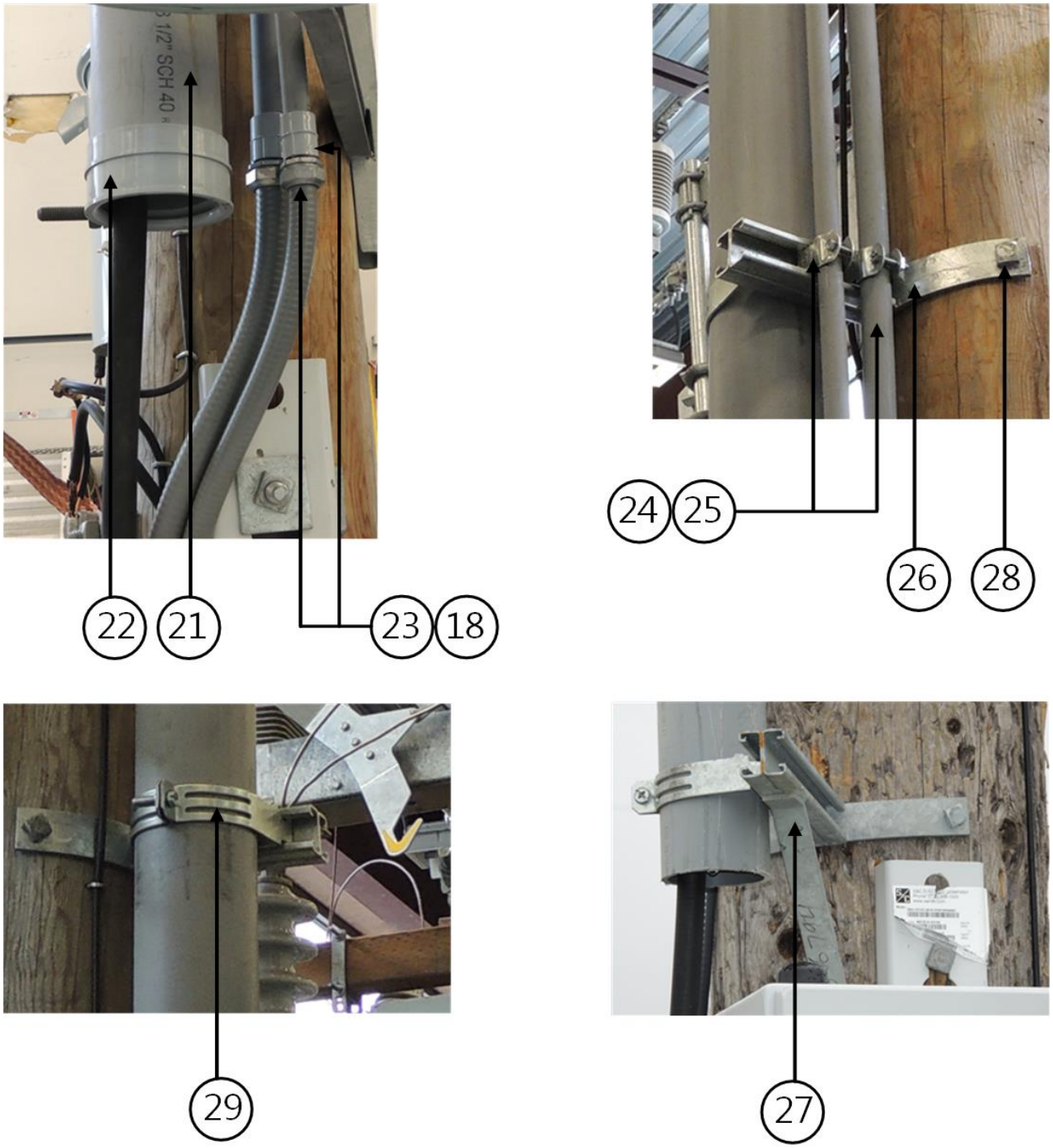

In Figure 5.4d, the 120 V conduit shown in the photo on the left will be sealed with a weatherhead. The 1/2-in communications conduit will remain open ended for Communications group to run fiber optics wire as needed. See Figure 5.4e.

Figure 5.4d. Control Cable Attachment

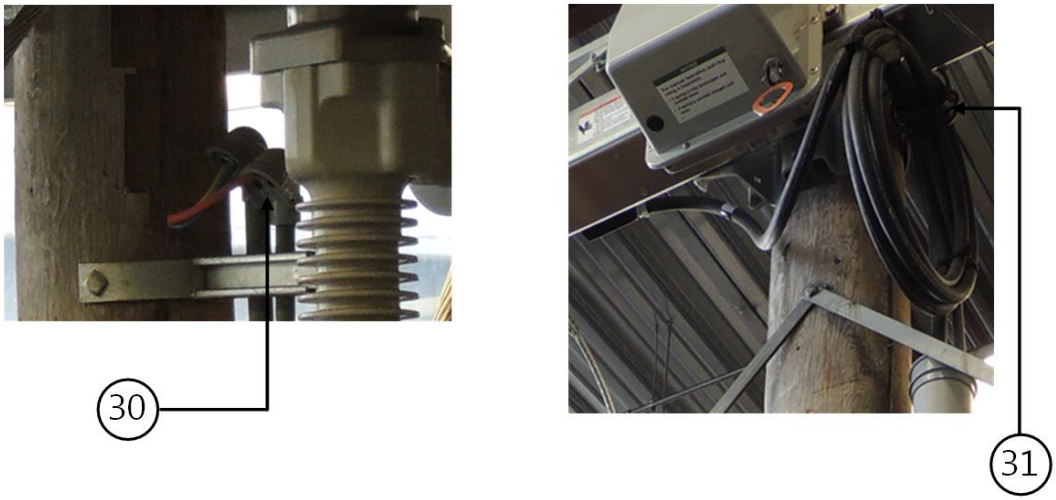

Figure 5.4e. Overhead Power and Fiber Optics Connection

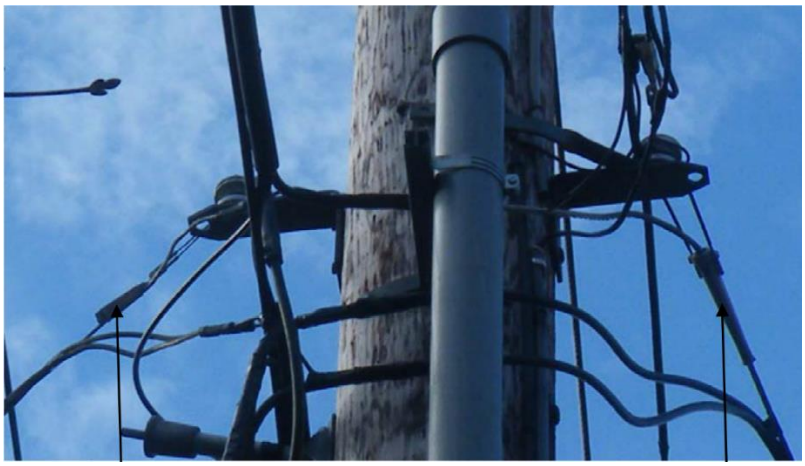

5.5 Installing Wildlife Protection Components

Install S&C supplied avian (wildlife) protection boots over the jumpers as they enter the switch.

Also see SCL 0072.01.

5.6 Grounding and Bonding

Before the switch can be energized with 26 kV or 120 Vac power, the switch, neutral, control box, ground level disconnect handle, and the pole must be bonded. See SCL 0451.01 for information on pole grounding.

5.7 Operator Tag Holder Placement

Install tag holder using two nails on the pole face or side with a minimum height of eight feet and a maximum height of ten feet so it can be within reach of short ladders but out of reach of the general public.

6. Material List

Table 6a. Materials for Switch Assembly

Fig	Compatible Unit	ID	Quantity		
4g	954 kcmil AAC, bare jumpers	TBD			
4g	397.5 kcmil AAC, bare jumpers	TBD			
4d	Mounting bracket and pole band	TBD			
#	**Material Description**	**ID**			
1	Bolt, sq head, 5/8" x 18", pole classes H3 and H4	480848	2	–	–
1	Bolt, sq head, 5/8" x 16", pole classes H1, H1, 1, and 2	780847	2		
1	Bolt, sq head, 5/8" x 14", pole classes 3, 4, and 5	780846	2		
2	Washer, curved sq, hot-dipped, galv., 4" x 4"	584775	2	–	–
3	Washer, flat round, hot-dipped, galv., 1-3/4"	585030	2	–	–
4	Washer, helical spring lock steel, 5/8"	584260	2	–	–
5	Wedge tap, 397.5 to 397.5 kcmil	651101	–	6	–
5	Wedge tap, 954 to 954 kcmil	651107	–	–	6
6	Wire, AAC, bare 397.5 kcmil	600113	–	60 ft	–
6	Wire, AAC, bare 954 kcmil	600126	–	–	60 ft
7	Connector, term., tin-plated, 500 kcmil	651270	–	6	–
7	Connector, terminal, tin-plated, 1000 kcmil	651295	–	–	6
8	Stainless steel bolt kit, 1/2-13 UNC x 2 SS	782040	–	24	24
9	Switch, upright, three-phase	013874	–	1	1

Table 6b. Materials for Ground-Level Disconnect Handle Assembly

Fig	Compatible Unit	ID	Quantity		
5.2.1c	Diagonal fiberglass and bell crank	TBD			
5.2.1c	Vertical pipe and attachments	TBD			
5.2.1a	Mounting and grounding of ground-level disconnect handle	TBD			
#	**Material Description**	**ID**			
3	Washer, flat round, 1-3/4", 5/8" bolt	585030	2	-	2
4	Washer, helical spring lock steel, 5/8"	584260	2	-	2
10	Grounding clamp, 1/2" x 13 NC, #8—2/0 str.	676200	1	-	-
11	Washer, flat sq., 2-1/4" x 2-1/4", 5/8"—4" bolt	585135	2	6	4
12	Bolt, sq head, 5/8" x 22", pole classes H3 and H4	780850	2	-	-
12	Bolt, sq head, 5/8" x 20", pole classes H1 and H2	780849	2	-	-
12	Bolt, sq head, 5/8" x 18", pole classes 1, 2, and 5	480848	2	-	-
12	Bolt, sq head, 5/8" x 16", pole classes 4 and 5	780847	2	-	-
13	Endless bolt	TBD	-	3	-
14	Bolt, sq head, 5/8" x 18", pole classes H2, H3, and H4	480848	-	-	2
14	Bolt, sq head, 5/8" x 16", pole classes H1, 1, and 2	780847	-	-	2
14	Bolt, sq head pole classes 3, 4, and 5, 5/8" x 14"	780846	-	-	2

Table 6c. Materials for Control Unit Assembly

	Compatible Unit	**ID**	**Quantity**		
5.4d	Control Cable Attachment	TBD			
5.4c	Conduit and Attachments	TBD			
5.4b	Power and Control Cable Routing	TBD			
#	**Material Description**	**ID**			
11	Washer, flat sq, 2-1/4" x 2-1/4", 5/8"x 4" bolt	585135	4	-	-
15	Bolt, sq head, 5/8" x 22", pole classes H3 and H4	780850	2	-	-
15	Bolt, sq head, 5/8" x 20", pole classes H1 and H2	780849	2	-	-
15	Bolt, sq head, 5/8" x 18", pole classes 1, 2, and 3	480848	2	-	-
15	Bolt, sq head, 5/8" x 16", pole classes 4 and 5	780847	2	-	-
16	Control unit, Automatic Restoration System	013876	1	-	-
17	Straps, adjustable, plastic tie, black, 20"	735812	20	-	-
18	Connector, flexible liquidtight, insulated, 1/2"	012088	2	2	-
19	Conduit, liquidtight, non-metallic, 1/2"	013544	10 ft	-	-
20	#12 triplex streetlight wire	014072	25 ft	-	-
21	Conduit, PVC, Schedule 40, 4"	734523	-	30 ft	-
22	End bell, PVC, 4"	734948	-	2	-
23	Female adapter, coupling, 1/2"	734508	-	1	-
24	Conduit, PVC, Schedule 40, 1/2"	734525	-	40 ft	-
25	Strap, strut pipe / conduit, light duty, 1/2"	689754	-	6	-
26	Bracket without brace, 18"	686796	-	3	-
27	Bracket with brace, 18"	686790	-	1	-
28	Bracket screws, size TBD	TBD	-	8	-
29	Strap, strut pipe / conduit, 4"	689772	-	4	-
30	Service entrance cap, 1/2"	013570	-	-	1
31	#4 poly wire, soft drawn	611442	-	-	6 ft

7. References

768-500; "S&C Scada-Mate Switching Systems, Outdoor Distribution (14.4 kV through 34.5 kV), Installation and Operation, Instruction Sheet 768-500"; dated September 30, 2013

768-31; "S&C Scada-Mate Switching Systems, Outdoor Distribution (14.4 kV through 34.5 kV), For Remote Supervisory Control, Specifications, Specification bulletin 768-31"; dated March 16, 2015

1045-30; "S&C 6801 Automatic Switch Control for Outdoor Pole-Mounted Gear, Descriptive Bulletin 1045-30"; dated June 2, 2014

1045-31; "S&C 6801 Automatic Switch Controls Specification, Specification Bulletin 1045-31"; dated November 9, 2015.

148213R2-A1E3G35-S121; "25000 Volts, Scada-Mate Switch, Outdoor Distribution Upright Mounting Configuration with R2 Operating Mechanism, Catalog No. 148213R2-A1E3G35-S121, S&C Drawing No. 492259.1.1, Revision 001"; dated July 7, 2015

ED-8096-S103; "Scada-Mate Ground-Level Disconnect Handle, Reciprocating Type Mechanism for Upright Switch, ¾" Operating Pipe, Drawing No. ED-8096-S103, Revision 001"; dated January 10, 2016

G-6232R5; "Printed Sheet, Drawing No. G-6232R5, Revision 005"; dated October 23, 2002

SCL Construction Standard 0072.01; "Wildlife Protection, Small Birds and Animals"

SCL Construction Standard 0451.01; "Ground Electrodes for Distribution Poles"

SCL Construction Standard 9352.21; "SCL Fiber Optic Clearances on Poles"

SCL Construction Standard 0100.11; "LR Bracket Installation"

SCL Design Standard 9105.26; "Distribution Pole Embedment Requirements"

WSDOT Design Manual, M 22-01.12; dated November 2015

Seattle ROW Improvements Manual; Latest Online Manual

8. Sources

Hickey, Caelin; SCL System Control Center Power Dispatcher and subject matter expert for 0125.07 (caelin.hickey@seattle.gov)

Lu, Curtis; SCL Standards Engineer and subject matter expert for 0125.07 (curtis.lu@seattle.gov)

Jensen, Marshall; SCL Line Crew Chief and subject matter expert for 0125.07 (marshall.jensen@seattle.gov)

Pham, Ryan; SCL Energy Delivery Engineer and subject matter expert for 0125.07 (ryan.pham@seattle.gov)

Russo, Dave; SCL North Distribution Design Engineer and subject matter expert for 0125.07 (dave.russo@seattle.gov)

Shetab, Muneer; SCL Standards Engineer, subject matter expert, and originator of 0125.07 (muneer.shetab@seattle.gov)