# Three-Phase Angle Pole Top Assembly for View Areas

## 1. Scope

This standard covers the information necessary to construct the pole top assembly for three-phase angle poles in view areas (view poles) supporting #4 AWG copper primary conductors on the 26 kV primary distribution system. Requirements for vertical spacing and hardware, and installation instructions to connect the primary conductor to the pole are included.

Criteria for pole top assemblies covered under this standard include the following:

| | |
|---|---|
| **Grade of construction** | C Only |
| **Pole class** | 1 or stronger |
| **Pole length** | 50 ft |
| **Soil condition** | Average |
| **Allowable line angle** | 7°–30° |

For line angles less than the allowable line angle described above, refer to SCL 0103.01.

For line angles greater than the allowable line angle described above, refer to SCL 0103.05.

Composite, steel, laminated, and other non-wood poles are outside the scope of this standard.

## 2. Application

This standard provides direction to Seattle City Light (SCL) engineers, crews, and contractors for the installation of a three-phase angle pole top assembly in view areas on 26 kV distribution poles with #4 AWG copper primary conductors.

## 3. General Requirements

View poles shall be installed only when absolutely required or upon request of SCL management. View poles are typically used for locations with a view obstruction problem.

The allowable line angle for a three-phase angle view pole is between 7 and 30 degrees as shown in Figure 3a. The pole shall be constructed as shown in Figure 3b.

A side tie shall be used for an angle pole and shall be installed on the side of the insulator away from the pole. The headpin on an angle pole shall be installed on the side of the pole where the conductor angles into the pole.

In average soils, a 50-ft pole shall be embedded 7 ft in the ground. Once set, 7 ft shall be cut off the top of the pole.

Single crossarms shall be installed on the side opposite of the face of the pole.

Equipment in the power supply space shall be installed on the face of the pole.

Angle poles shall be guyed according to the requirements of SCL 0199.01.

The highest communication attachment shall be located at a minimum of 40 in below the secondary and neutral and a minimum of 10 ft below the top of the transformer.

Only two communication attachments at 21 ft and 22 ft are allowed on a view pole.

**Figure 3a. Allowable Line Angle Range for 7°–30° Angle Pole**

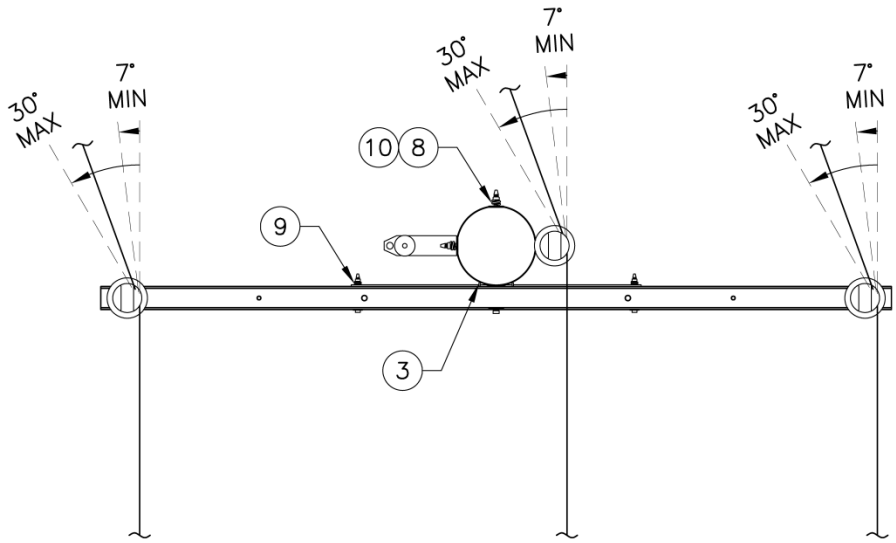

**Figure 3b. Three-Phase Angle Pole Top Assembly for View Areas (7°–30°)**

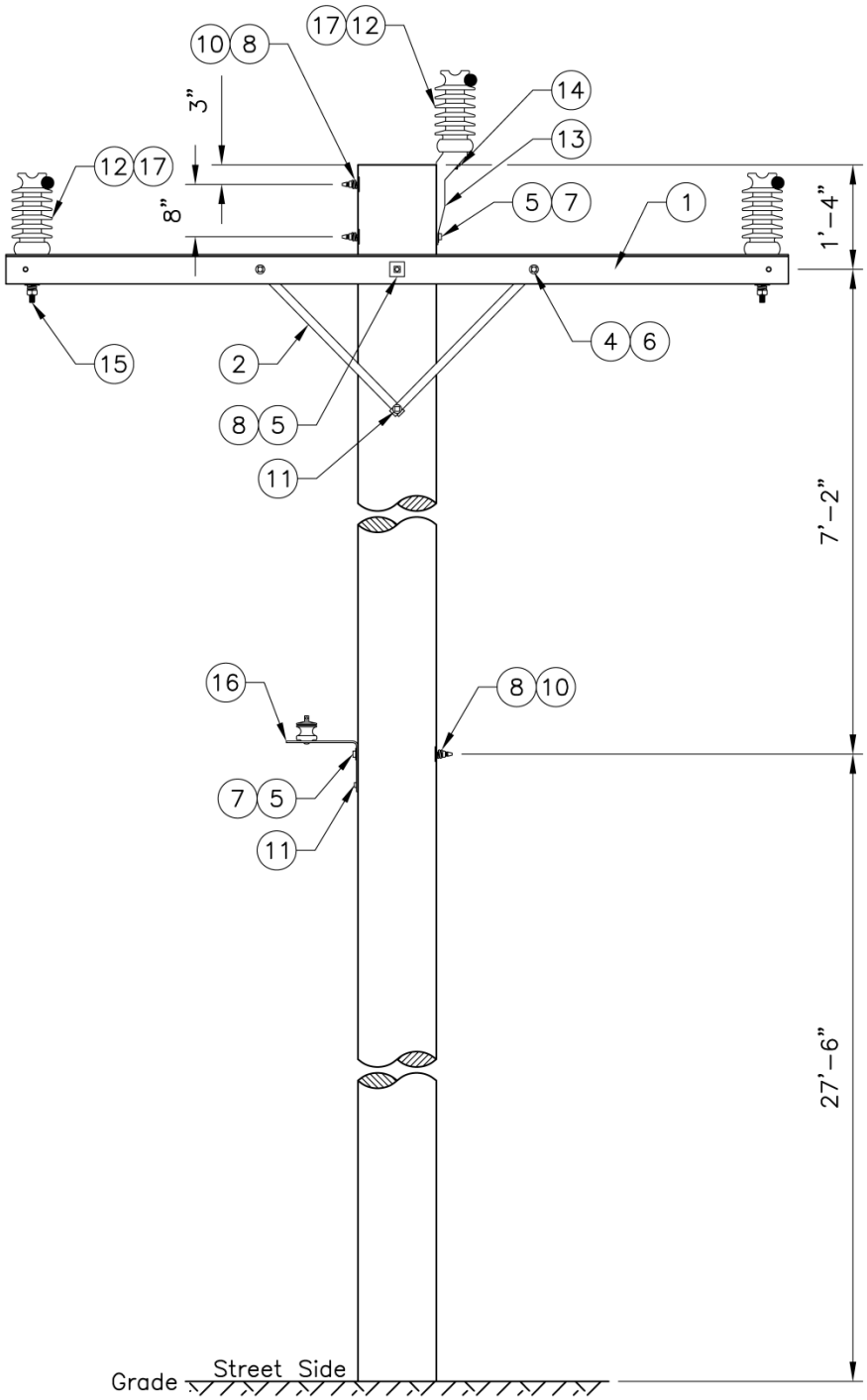

## 4. Construction Notes

The LR bracket is installed on the street side of the pole.

If two neutrals are required, mount the second neutral on the street side 1 ft below the top bolt hole of the original neutral.

If poor soil is found in the field, contact the SCL Design Engineer.

If there are avian and wildlife concerns, contact the SCL Design Engineer.

If there are salt spray concerns, contact the SCL Design Engineer.

## 5. Material List

**Table 5a. Materials for a Three-Phase Angle Pole Top Assembly for View Areas**

| Fig | Compatible Unit | ID | Qty |
|---|---|---|---|
| 3b | Three-Phase Angle View Pole (7°–30°) | PLT#4-3ANGHPVW | |

| # | Material Description | ID | |
|---|---|---|---|
| 1 | Crossarm, 8 pin, 10' | 540220 | 1 |
| 2 | Crossarm brace, flat, 32" | 563005 | 2 |
| 3 | Gain plate | 565313 | 1 |
| 4 | Bolt, machine, galvanized, 1/2" x 5" | 780804 | 2 |
| 5 | Bolt, machine, galvanized, 5/8" x 14" | 780846 | 4 |
| 6 | Washer, round, flat, 1/2" | 585025 | 2 |
| 7 | Washer, round, flat, 5/8" | 585030 | 3 |
| 8 | Washer, square, flat, 2-1/4" x 2-1/4" | 585135 | 5 |
| 9 | Washer, coil spring, 1/2" | 584257 | 2 |
| 10 | Washer, coil spring, 5/8" | 584261 | 4 |
| 11 | Screw, lag, 1/2" x 4" | 785261 | 2 |
| 12 | Insulator, post top, 34.5kV | 690157 | 3 |
| 13 | Bracket, pole top | 563253 | 1 |
| 14 | Stud, short, 3/4" x 1-3/4" | 696826 | 1 |
| 15 | Stud, long, 3/4" x 7-1/2" | 696828 | 2 |
| 16 | LR bracket | 690404 | 1 |
| 17 | Wire, tie, insulator, #6 SD solid Cu (ft) | 610210 | 9 |

## 6. References

**SCL Construction Standard 0199.01**; “Requirements for Guying and Anchoring”

**SCL Construction Standard 0103.01**; “Three-Phase Tangent Pole Top Assembly for View Areas”

**SCL Construction Standard 0103.05**; “Three-Phase Dead End Pole Top Assemblies for View Areas”

## 7. Sources

**National Electrical Safety Code (NESC) C2-2012 Edition**; Institute of Electrical and Electronics Engineers (IEEE) Inc., New York, NY, 2011

**Hall, Alan**; SCL Senior Electrical Engineer and subject matter expert for 0103.03 (alan.hall@seattle.gov)

**Lu, Curtis**; SCL Standards Engineer and originator of 0103.03 (curtis.lu@seattle.gov)