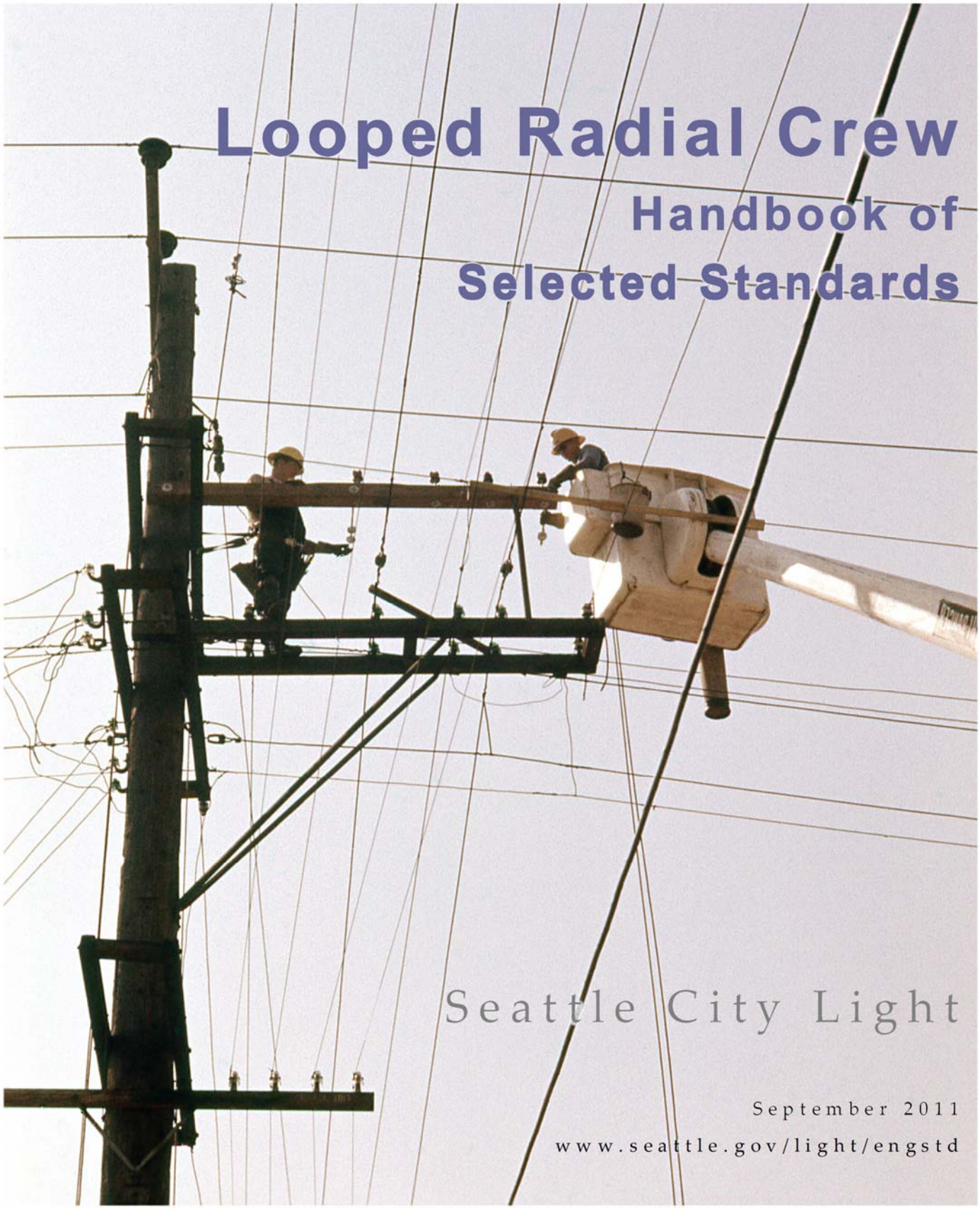

Looped Radial Crew

Handbook of Selected Standards

Seattle City Light

September 2011

www.seattle.gov/light/engstd

Seattle City Light Standards Group

Looped Radial Crew Handbook of Selected Standards

September 2011

Welcome to your 2011 edition of the Looped Radial Crew Handbook.

Seattle City Light's standards, consisting of Design Standards, Material Standards, Construction Standards (Guidelines), Network Construction Standards (Guidelines), and the Stock Catalog, define the utility's best practices. This one-volume selection was compiled from these Standards. Compliance with these standards is mandatory for City Light employees and contractors. Your cooperation is critical and essential to our success.

Phil West, Customer Services-Energy Delivery Officer

Seattle City Light

Looped Radial Crew Handbook of Selected Standards

Version 2011

Published by the Seattle City Light Standards Group for use within City Light

Prepared by Patti Berg andRick Rice

Seattle, Washington

September 2011

see *each section directory for full listings of standards selected for this 2011 Looped Radial Crew Handbook*

footer page

table of contents 3

standards group 5

looped radial standards committee 6

on-line access 7

printed standards publications 8

bad order equipment 9

Construction Standards tab

directory 13

selected new numbered construction standards 19

selected looped radial and dual standards:

D2-D6 ..... tab

D7-D9 ..... tab

D10-D11 ..... tab

D12-D16 ..... tab

U1-U2 ..... tab

U4-U5 ..... tab

U7-U13 ..... tab

DU ..... tab

E/ S/ SL ..... tab

Material Standards tab

directory 527

selected material standard 529

Design Standards tab

directory 531

selected design standards 533

9600 ..... tab

selected design standards 647

refer to the Red Page for the latest versions of our standards

Customer Service and Energy Delivery/ Asset Management, Standards, Org. Unit 321

standards staff:

Supervisor:	John Shipek	206-684-3950
Engineers:	Aida Diop	206-684-5841
	Brett Hanson	206-684-3726
	Curtis Lu	206-684-3048
	Quan Wang	206-386-1785
Quality Assurance	vacant	-
Publication Services and Archive:	Patti Berg	206-233-2184
	Rick Rice	206-684-3646

other contact information:

URL: http://www.seattle.gov/light/engstd/

mailstop: SMT-28-22

fax: 206-684-3945

email: standards.scl@seattle.gov

office location:	700 Fifth Avenue (at Columbia Street) Seattle Municipal Tower 36th floor (3644) cubicle row "Q" Seattle Washington 98104-5031
U.S. Postal Service address:	Attention: Standards (or contact name) Seattle City Light PO Box 34023 Seattle Washington 98124-4023
parcel service address: (FedEx, UPS, etc.)	Attention: Standards (or contact name) Seattle City Light 700 5th Avenue, Suite 3200 PO Box 34023 Seattle Washington 98124-4023 (for UPS, etc.) contact phone

Bill Shoemaker began with Seattle City Light on July 9, 1990 as our first Quality Assurance Specialist. Over his career, Bill oversaw and assured the quality of approximately $400 million worth of material and equipment that entered inventory. In addition to inspecting material, anyone who has worked with Bill knows the tireless effort he has put in over the years to make everyone else's job easier. He has retired as of December 31st, 2010 and will be sorely missed.

looped radial standards committee

The Looped Radial Standards Committee serves to discuss and solve problems related to design, construction methods and material used in the overhead and underground distribution systems.

If you have a Standards-related question or problem, you may bring it to the attention of a member of the Standards Committee.

The Looped Radial Standards Committee meeting time is the second Tuesday of each month, from 9:00 a.m. until 11:30 a.m. Check with Standards to confirm time and place. *Note, security requires that those without keycard rights obtain a pass on the 32nd floor to reach City Light offices and meeting rooms.*

At the present time, the following employees are serving on the committee by generously lending their time, knowledge, and experience:

Capital Projects
- Dave Albergine

Electric Service Engineering
- Ken Holder
- Abdi Yussuf

Electrical Reviewers
- Tommy Edwards
- Pete Jerochim
- Ed Hill
- Rob Youngs

Environmental
- Larry Garcia

Material Control
- Sandra Andersen
- Patricia Ballard
- Marsha Greenfield
- Jenee Halse
- David McLean
- Cathy Saxby

North Distribution Design
- Dave Russo
- Eivind Perander

North Electrical Services and Construction
- Brad Beatty
- Michael Brooks
- Peter Kopp
- Richard Murphy

North Warehouse and NSC/SSC Tool Rooms
- Irene Weiland

Safety Group
- Everett Tawney

South Distribution Design
- Chris Detter
- Bradley Joyce
- Liman Zhuang

South Electrical Services and Construction
- Walt Aho
- Tom Caddy
- Christine Knowlton
- Robert Smart

Standards Group
- Patti Berg
- Aida Diop
- Brett Hanson
- Curtis Lu
- Rick Rice
- John Shipek, chair
- Quan Wang, clerk

Standards documents are available on-line. The on-line versions of the Construction Standards, Material Standards, Network Construction Standards, Stock Catalog and Design Standards (SCL internal only) include the most recent updates and revisions. Unlike the Looped Radial Handbook, which is only a selection of more commonly used Standards documents, the on-line version contains a complete set of all Standards documents.

Revisions

Updates and revisions are made about twice a month to Standards documents. ***To make sure you have the latest copies please refer to the on-line versions.*** To obtain an email announcement on the release of revisions, please send a request to standards.scl@seattle.gov. Write "revision announcement" in the subject line.

City Light Computer Network

An electronic copy of the City Light Standards, can be viewed on your City Light computer from the Standards Group **"Red Page"** on City Light's computer network. The "Red Page" is an Adobe Acrobat PDF file from which you can search and access all of the published Standards documents.

Obtain access to the "Red Page" by asking the Help Desk (684-3766) to add the Standards Publications NAL icon (known as "home101", "standards101", or "standards home101") to your Start Menu. You will need Adobe Acrobat Reader to display the "Red Page" documents.

The Red Page NAL icon contains programming that helps you set up searches, but in doing a search from the red page, please remember to select "Currently Selected Indexes" on the "Advanced Search Option" menu.

City Light Standards on the World Wide Web

The Seattle City Light Standards Publications web site on the World Wide Web is available through your web browser. Type the following into the address field of your web browser: http://www.seattle.gov /light/engstd/. **T**he www web site offers electronic copies of the pages found in your printed Standards documents and they may be more up-to-date and are more complete except for the Design Standards. The on-line documents are updated for revisions and additions (about twice a month) on the same schedule as City Light's network site plus one day.

Contact Patti Berg or Rick Rice at City Light Standards Publications with questions and suggestions.

City Light Standards Book Distribution

City Light Standards Group provides printed books for internal City Light users if you are on the distribution list (see colume to the right). Digital files are available for printing most Standards books. For internal City Light users, the Adobe Acrobat files of the Standards books are also avaliable from the "Red Page."

Anyone can request the following Standards volumes from current publication cycles: *Material Standards, Network Crew Handbook of Selected Standards*, *Looped Radial Crew Handbook of Selected Standards*, *Civil Crew Handbook of Selected Standards*, and the *Stock Catalog*. Either hard-copy or digital Acrobat pdf versions can be available – ask Standards (standards.scl@seattle.gov). Where available, hard-copy versions can be obtained from our printing service for a charge.

Updates

For the latest revisions of the Standards publications, we encourage users to rely on one of the on-line access sites, either the www.seattle.gov/light /engstd/ site, or for Seattle City Light users, the Standards Red Page. The revision date (effective date) is listed on each document. Standards documents are revised throughout the year and the on-line versions will reliably keep you up-to-date. Note, Design Standards are only available on the Red Page – not available for outside distribution.

To obtain an email announcement on the release of revisions to the Standards documents, please send a request to standards.scl@seattle.gov. Write "revision announcement" in the subject line.

Book Request for City Light Employees

For future publication cycles, City Light employees may request to be added to the distribution list for Standards books. Employees who are on the list receive email invitations to order and receive books. Send a request (for example, send an email to standards.scl@seattle.gov and write "printed books" in the subject line).

If you are ordering books for a group, identify yourself as the order lead and coordinate with the group to make sure we don't receive duplicate orders. *To get the books that you order**, send all the following information**:*

- *City Light employee name,*
- *email address,*
- *org unit number,*
- *complete mail delivery address,*
- *internal mail delivery stop,*
- *phone number,*
- *number of books (quantity) of each,*
- *and finally, the type of binding for each volume (coil, three ring binder, or three hole binder pages for your own binder).*

It is important that all B.O. (bad order) parts, apparatus, equipment, or devices be properly tagged and promptly sent to Quality Assurance.

The tag should include the following information:

- Date of failure
- Name of Crew Chief or electrical worker and their telephone number
- Location of failure
- Stock Number of the part
- Nature of problem or description of failure

Please send B.O. equipment to:

Quan Wang

Q/A (Quality Assurance)

SSC-B116

(206) 386-1785

see the 2010 Stock Catalog for copies of the tag.

Front of Bad Order Equipment/Material Tag :

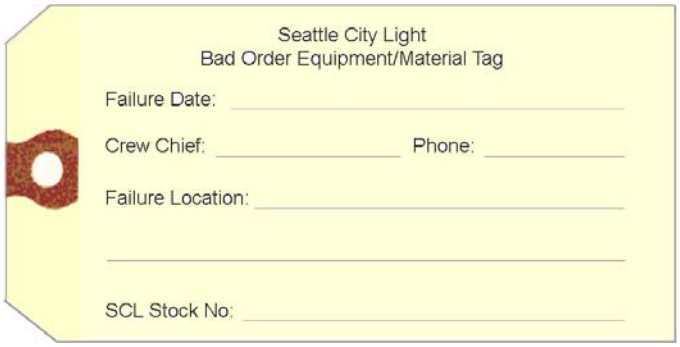

Back of Bad Order Equipment/Material Tag:

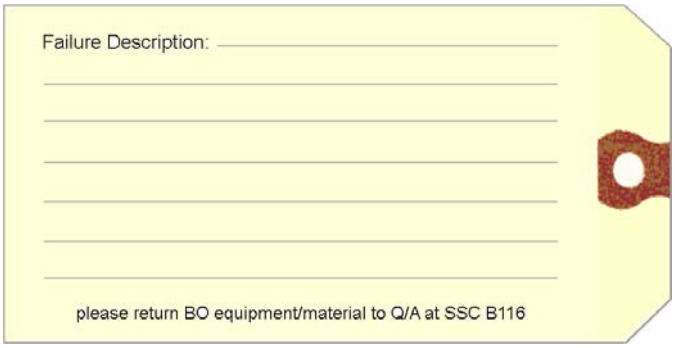

Seattle City Light

Standards Publications

Looped Radial Crew Handbook

of Selected Standards

construction standards

September 2011

This directory lists the City Light Construction Standards selected for the Looped Radial Handbook of Selected Standards. The respective page number in this volume, the "handbook page," is shown to the right of each title. The numbers-only standards are first in order in this section. The Network and dual standards come next, and the Looped-Radial-only standards follow at the end of the section, as indicated by this directory. Not all Construction Standards were selected for the handbook. Other Construction Standards are available through the Red Page.

There is a new Construction Standard labeled "Work Practice" (0057.03, Wheel Chock Application). This is a new class of document within the Construction Standards. More to come.

section no. standard id	section network id	standard title	handbook page
	new numbered construction standards:		***tab***
0050	Safety		
0057.03		*Application of Wheel Chocks*	***19***
0072.01		*Wildlife Protection, Small Birds and Animals*	***23***
0090	Joint Use		
0093.06		*Bracket, Communications Cable Attachment*	***28***
0095.05		*Pole Attachments, Automated Meter Reading and Cellular Phone Antenna*	***30***
0170	Overhead Distribution Structures		
0173.20	-	*Terminal Pole with Primary Switch, 600 Amp*	***37***
0200	Underground Distribution Structures		
0233.05	-	*Secondary Handhole Grounding (17" x 28")*	***49***
0400	Conductors		
0535.11	-	*Heat Shrink Splices, Straight, 110 kV BIL, Tyco*	***51***
0600	Transformers		
0652.01	-	*Transformer Pad, Installation and Grounding, 1Ø, 25-167 kVA*	***55***
0652.03	-	*Transformer Pad, Installation and Grounding, 3Ø, 75-300 kVA*	***57***
0652.05	-	*Transformer Pad, Installation and Grounding, 3Ø, 500-1500 kVA*	***59***
0652.07	-	*Transformer Pad, Installation and Grounding, 3Ø, 2000-2500 kVA*	***61***
0661.03	-	*Transformer Pad, Installation and Grounding, 3Ø, 75-2500 kVA*	***66***
0751.00	-	*Customer Requirements, In-Building Transformer Vaults, Network and Looped Radial Systems*	***72***
0751.60	-	*Primary Metering Compartment Requirements, 27 kV*	***78***
	looped radial construction standards:		
D2-D6	Clearances, Poles and Guying		***tab***
D2-1	-	*Standard Spacing of Arms*	***99***
D2-1.1	-	*Attachments on Standard Utility Poles*	***100***
D2-1.2	-	*Cellular Phone and Personal Communications Services (PCS) Antenna Pole Attachments Above Primary Conductors*	***104***

section no. standard id	section network id	standard title	handbook page
D2-1.3	-	*Cable TV Power Supply Attachments*	***111***
D2-2	-	*Wire Crossing Clearances*	***114***
D2-3	-	*Clearances From Structures and Ground*	***115***
D3-3	-	*Pole Setting Depth, 26.4 kV Looped Radial System*	***123***
D3-7	-	*Wood Guard Post Installation*	***124***
D4-1	-	*Standard Crossarms*	***125***
D4-4	-	*Braces*	***126***
D6-4	-	*Guying and Anchoring*	***127***
D7-D9	Construction		***tab***
D7-1		*115 kV Transmission Construction*	***141***
D8-10	-	*Typical Number Board Installation*	***146***
D8-11	-	*26 kV 3 Pole Gang Operated Air Break Switch, Wood Crossarm*	***147***
D8-12	-	*26 kV, 3 Pole Gang Operated Air Break Switch, Unitized*	***150***
D8-14	-	*Typical 26 kV Switch Termination Assembly*	***151***
D8-17	-	*26 kV Switch, 600 Amp, 3 Pole Gang Operated Upright*	***152***
D8-19	-	*26/34.5 kV Upright Switch, 1200 Amp, 3 Pole, Gang Operated for Wood Pole Mounting*	***155***
D8-20	-	*26 kV Switch, 1200 Amp, 3 Pole Gang Operated for Wood Pole Mounting, 1200 Amp Cable Termination*	***157***
D8-26	-	*26 kV Circuit Breaker*	***159***
D9-8.5	-	*Common Secondary Neutral Deadending Details for Aluminum Neutral Conductor*	***160***
D9-9	-	*Rack Secondary Corner Details*	***161***
D9-11.4	-	*26 kV Deadends*	***162***
D9-11.6	-	*4/0 Parallel Cable*	***164***
D9-51	-	*26 kV Construction for 954 Rail*	***165***
D9-52	-	*15/26 kV Distribution Crossarm Details*	***166***
D9-53.1	-	*26 kV Horizontal Post Construction*	***167***
D9-54	-	*Typical 26 kV Flying Tap*	***168***
D9-55	-	*26 kV Corner Construction, 3 Arm Double Circuit*	***169***
D9-58	-	*26 kV Headpin Primary and LR Secondary Construction*	***170***
D9-59	-	*Pole Spacing – View Problem, for 40 Foot Pole*	***171***
D9-60	-	*15/26 kV Distribution Single Phase Corner Construction*	***172***
D9-67.1	-	*15/26 kV Distribution, Corner Pole Details 3 Phase*	***174***
D9-80	-	*Tree Clearances*	***176***
D10-D11	Transformers and Limiters		***tab***
D10-3.1	-	*Transformer Installation, Single Phase, 15/26 kV*	***187***
D10-3.3	-	*Fused Cutout Mounting – Contaminated Atmosphere*	***188***
D10-4.5	-	*15/26 kV Distribution, 2 Transformer, 3 Phase Cluster Mounted*	***189***
D10-5	-	*15/26 kV Distribution, 3 Phase Transformer Installation Cluster Mounted*	***190***
D10-5.1	-	*15/26 kV Distribution 3 Phase Transformer Installation Cluster Mounted, Pole Top*	***191***
D10-11	-	*Copper Wire Sizes for Distribution Transformer*	***193***

section no. standard id	section network id	standard title	handbook page
D10-14	-	*15/26 kV Capacitor Installation, 1200 KVAR, Controller Switched Bank, Grounded WYE*	***195***
D10-14.3	-	*15/26 kV Capacitor Installation, 1200 KVAR, Controller Switched Bank, Floating WYE*	***197***
D11-2	-	*27 kV Fault Limiter Installation*	***200***
D12-D16	Streetlights, Services and Conductors		***tab***
D12-9	NSL-30	*Luminaire Alignment*	***203***
D12-20	-	*Floodlight Installation Details Direct Pole Mount*	***204***
D13-1	-	*Secondary Service Details*	***205***
D14-1	-	*Ampact Tap Chart*	***206***
D14-2	-	*Distribution Conductor Sag*	***208***
D14-3	-	*Bare Conductors Mechanical and Electrical Properties*	***209***
D14-4	NSV-20	*Bolted Connection*	***210***
D14-6	-	*Distribution Line Connections*	***212***
D14-8	NSV-10	*Tool and Die Cross Reference for Connectors*	***213***
D15-1	-	*Bird Guard Installation*	***216***
D15-2.1	-	*Hand Wrapped Ties, Single Pin Type Insulator, for Copper or Aluminum Poly Covered Conductors*	***217***
D15-2.2	-	*Hand Wrapped Spool Ties for Copper or Aluminum Poly Covered Conductors*	***218***
D15-2.3	-	*Installing Single "Hot" Tie on Single Insulator for Copper or Aluminum Conductors*	***219***
D15-2.4	-	*Installing Double "Hot" Tie on Single Insulator for Copper or Aluminum Conductors*	***220***
D15-2.5	-	*Installing Double Tie on Double Arm (Two Insulators) for Copper or Aluminum Conductors*	***221***
D15-2.6	-	*Angle Tie on Single Insulator and Single Side Tie on Horizontal Insulator for Copper or Aluminum Conductors*	***222***
D16-2	-	*Grounding Rod Installation*	***223***
U1-U2	Engineering and Underground		***tab***
U1-2.6	NDW-20	*Mapping Symbols - Obsolete*	***227***
U1-4.11	NCI-60	*Cable Pulling Calculations: Maximum Pulling Tensions*	***229***
U1-4.12	NCI-61	*Pulling Cable Around Blocks*	***235***
U1-4.15	NCI-20	*Guide for High DC Voltage Field Testing of Insulated Power Cable*	***237***
U1-4.51	NTP-100	*Transformer Secondary Lead Sizes for Underground Installations*	***244***
U2-6	NVH-20	*Inspection and Repair Procedures for Precast Vaults and Manholes*	***245***
U2-10	NDK-50	*Electrical Conduit and Facilities in Public Rights-of-Way*	***249***
U2-11		*Installation of Nonmetallic Conduit With FTB Concrete Encasement*	***256***
U2-11.2	NDK-20	*Reinforcement of Concrete Encased Duct Runs*	***261***
U2-11.3	NDK-30	*Termination of Existing Ducts in New Vaults or Manholes*	***262***
U2-11.40	NDK-40	*Mandreling and Cleaning of Ducts and Conduits*	***264***
U2-11.5	-	*Thermal Backfill for High Voltage Cables*	***265***
U2-12.1	NVH-60	*Sump Pump Pipe Installation, Vaults and Manholes, New 2" or Repair 1-1/4"*	***267***
U2-12.4	NVH-70	*Sump Installation for Existing and Cast-In-Place Vaults or Manholes*	***271***
U2-13.1	NVH-50	*Typical Handhole With Conduit*	***272***

section no. standard id	section network id	standard title	handbook page
U2-14.1	-	*Residential Equipment Location Details*	***273***
U2-14.2	-	*Typical Vault or Handhole Installation, 5 x 7 x 7 and Smaller*	***276***
U2-15.1	-	*Installation of Ring Type Vaults*	***278***
U2-16	-	*Vault, Manhole, Handhole Number Identification*	***281***
U2-22	-	*Pre-Cast Panel Vault Installation, General, Non-Network Area*	***283***
U4-U5	Cable – Installation, Splices, and Terminations		***tab***
U4-2.8	NCI-150	*Bending, Training, and Racking Underground Secondary Cable (Service and/or Bus Ties)*	***289***
U4-3	NCI-170	*Bending, Training, Racking and Re-Reeling of Underground Primary Cable*	***290***
U4-3.3	-	*Cable Tagging and Phase Markings*	***292***
U4-3.5	NCI-130	*Creepage of Cable*	***293***
U4-3.6	NCI-70	*Duct Edge Protection*	***294***
U4-3.7	NCI-90	*Fire and Electric Arc Proofing of Cables*	***295***
U4-5	NCB-50	*Installation of Secondary Bus Bar*	***296***
U5-1.02	NCB-80	*Splices and Taps, 600 Volt; Aluminum to Aluminum, Aluminum to Copper, Copper to Copper*	***300***
U5-1.03	NCB-100	*Application Data for Heat-Shrinkable Splice Covers and Cable Caps*	***302***
U5-1.10	NCB-110	*Submersible Multiple Connector Installation for Aluminum Secondary Cable-Type Use*	***303***
U5-2.7	-	*"J" Box Mounting and Grounding*	***305***
U5-2.81	NSP-290	*Primary Cable Preparation, General*	***307***
U5-2.8.4	NSP-300	*600 Amp Primary Connectors and Cable Mounting Methods*	***325***
U5-2.8.5	-	*Terminator - Elbow Receptacle Installation, #8 Kerite Cable*	***330***
U5-2.8.7	-	*200 Ampere Elbow Sealing on 1/0, 28 kV Jacketed Concentric Neutral Cable*	***331***
U5-2.9	-	*2000 Amp, 600 Volt, One Way and Two Way Submersible Connectors for Aluminum To Aluminum and Aluminum To Copper Secondary Cables*	***333***
U5-3.20.1	NSP-170	*Splice, Straight, 28 kV XLP or EPR Insulated Cable*	***334***
U5-3.20.3	-	*Grounding Splices on 28 kV Drain Wire-Shielded Cable*	***337***
U5-3.20.4	-	*Grounding 3M Cold Shrink Splices on 28 kV Flat Strap Cable*	***339***
U5-3.22.1	-	*Jacket Sealing When Splicing Jacketed 1/0 28 kV CN Cable To Bare 1/0 28 kV CN Cable*	***340***
U5-7	-	*Intercepting Existing Underground Service*	***342***
U5-14	NSP-310	*600 Ampere Primary Equipment Termination*	***343***
U5-15.05	-	*Separable Connector (Elbow), 200 A Loadbreak*	***346***
U5-16.05	-	*Separable Connector (Elbow), 200 A Deadbreak*	***353***
U5-17.05	NSP-304	*Separable Connector (T-Body), 125 kV BIL, Deadbreak*	***360***
U5-17.10	NSP-305	*Separable Connector (T-Body), 150 kV BIL, Deadbreak*	***367***
U5-26.20	NSP-285	*Termination, 200 kV BIL, Cold Shrink*	***374***
U7-U13	Conduit, Vaults, Pads, Customer		***tab***
U7-10	NDK-70	*Conduit Risers On Poles*	***381***
U7-10.1	NDK-80	*Conduit Riser - 600 Volts, Pole Base Detail*	***383***
U7-10.2	NDK-90	*Primary Conduit Riser, Pole Base Detail*	***384***

section no. standard id	section network id	standard title	handbook page
U7-10.8	NDK-110	*Cable Identification*	***386***
U7-10.9	NDK-120	*Grounding Conduit Risers On Poles*	***387***
U9-5	-	*577 Vault Transformer and Junction Box – Installation, Grounding and Connections*	***389***
U9-5.5	-	*Three Phase Loadbreak Vault, 612 and Larger – J-Box Grounding and Primary Neutral Details*	***393***
U9-6	-	*577 Vault With 3 LB Junction Boxes – Installation, Grounding and Connections*	***398***
U9-7.3	-	*Grounding and Connection Diagram, Single Phase 26 kV Distribution Transformer*	***402***
U9-7.5	-	*Transformer Installation, Grounding, and Connections – 120/240V and 240/480V, 3 Phase, 4 Wire*	***405***
U9-7.7	-	*Transformer Installation, Grounding and Connections – 208Y/120, 240Y/138, and 480Y/277 Volts, 3 Phase, 4 Wire, Subtractive Polarity*	***409***
U9-8.2	-	*Padmount Primary Metering Cabinet Installation*	***415***
U10-1.2	-	*Transformer Pad, Commercial and Industrial, Underground from Overhead*	***417***
U10-1.4	-	*Padmount Transformer Installation, Grounding & Connections, 240/120 Volts, 1 Phase, 3 Wire, 25 Through 167 kVA*	***421***
U10-5	-	*Pad Mount Switch Installation Guideline*	***422***
U10-5.2	-	*Pad Construction for Pad Mounted Switchgear*	***431***
U10-5.2.1	-	*Primary Metering Pad*	***434***
U10-5.3	NTP-40	*Network Transformer Anchor Beam for Seismic Loading (Earthquake Anchors)*	***437***
U10-5.5	NTP-50	*Vibration Dampers, Network Type and Single Phase Transformers*	***442***
U10-6	NTP-60	*Lighting and Sump Pump Installation for Single Transformer Vaults*	***444***
U10-7	-	*Requirements for Transformer Pads and External Below-Grade Transformer Service Vaults, Looped Radial System*	***450***
U11-8	-	*Commercial Subway Transformer, 750 Through 2500 kVA, Standard Installation*	***453***
U11-9	NTP-110	*Transformer and Network Protector – Secondary Bolting and Taping*	***456***
U11-9.1	-	*Bus Extensions and Cable Tap Boxes*	***458***
U12-1.3	NMT-10	*Meter Location and Conduit Entrance Details for Secondary Underground Residential Service 320 Amp Maximum*	***460***
U12-1.4	NDK-60	*Installation Details for Underground Services-Non Metallic and Rigid Steel Conduit On Private Property*	***463***
U12-3	-	*Secondary Service Connection – Outside The Network Area*	***464***
U12-5	NMT-20	*Meter Socket Connections and Conductor Identification, 200 Ampere Maximum*	***472***
U13-1	NGE-50	*Electrical Insulating Oil, Sampling and Testing – Flat Gap*	***473***
DU	Joint Overhead and Underground		***tab***
DU2-0	NGE-10	*Recommended Typical Street Marking*	***479***
DU5-1	NSV-30	*Joint Preparation for Bolted and Compression Joints With Copper and/or Aluminum (Plus Steel to Copper)*	***780***
DU5-5	-	*Pole Termination - 600 Volt – Underground To Overhead*	***483***
DU5-15.3	-	*Pole Termination, 3 Phase 26 kV Distribution – Metal Oxide Arrester, #1/0 28kv XLP, 2/C & #8 Kerite*	***485***
DU5-15.31	-	*Pole Termination, 3 Phase 26 kV Distribution Wing Arm Construction – Metal Oxide Arrester, #1/0 28kv XLP, 2/C & #8 Kerite*	***487***
DU5-15.62	-	*Pole Termination, 3 Phase, 1200 Amp, 2 – 750 Kcmil, 1/C, or 2 – 1000 Kcmil, 1/C Cables Per Phase*	***489***

section no. standard id	section network id	standard title	handbook page
DU5-15.8	-	*Single Phase Primary Underground, 15 kV Metal Oxide Arrester, #1 2/C, 27 kV XLP Cable*	***491***
DU5-18	-	*Pole Termination, 26 kV Single Phase Underground Supply To Overhead Transformer*	***493***
DU10-5.1	-	*15/26 kV Distribution, 3 Phase Transformer Installation – Cluster Mounted, Pole Top 25564 Grd. Y/14760 To 4160 Grd. Y/2400*	***496***
DU10-5.2	-	*15/26 kV Distribution Single Phase Step Down To 2400 Volt*	***498***
DU11-1	-	*Fusing Schedule*	***499***
DU11-1.1	-	*Fuse Holding Devices & Fuses*	***501***
DU11-4	-	*Cable Limiters – Distribution*	***503***
DU13-4	NMT-30	*Meter Base Arrangements*	***505***
E S SL			***tab***
	Engineering Standards (E)		
E1-11	NGE-20	*Full Load Currents in Amperes — Single-Phase Circuits*	***509***
E1-4	NGE-30	*Phase Relations for City Light System*	***511***
E1-4.1	NGE-40	*Voltage Zones*	***512***
	Safety Standards (S)		
S319-0	NSA-10	*Hand Signals for Use in Line Construction*	***513***
S319-1	NSA-20	*Hand Signals for Shovel And Crane Operation*	***517***
S319-2	NSA-30	*Safe Working Load for Ropes and Slings*	***518***
S403-1	-	*Safe Pole Climbing Practices*	***519***
	Streetlighting Standards (SL)		
SL10-2	NSL-50	*Aluminum Streetlighting Pole Installation*	***520***
SL10-5	NSL-80	*Streetlight Pole Base Installation Details*	***521***

Something missing? Please let us know if something useful could be added to the next edition of the Network Crew Handbook.

Seattle City Light

WORK PRACTICE

WHEEL CHOCK APPLICATION

1. Scope

This standard covers the requirements for applying aluminum wheel chocks, Stock Number 760931, to light, medium, and heavy duty vehicles and equipment.

Cars and sport utility vehicles (SUVs) with gross vehicle weight rating (GVWR) of less than 8,000 pounds are outside the scope of this standard.

Equipment with a GVWR greater than 54,000 pounds is outside the scope of this standard.

Trailers of any size are outside the scope of this standard.

2. Application

This standard is directed at drivers of light, medium, and heavy duty vehicle and equipment.

Wheel chocks are used as a back up measure to prevent a vehicle from rolling down a hill in the event the vehicle's parking brake system fails.

The details of this standard were derived from field tests performed in August 2010 under the supervision of a professional engineer. A professionally-edited video of these tests is available for showing at Safety Meetings or driver training sessions. Contact Standards or Safety for a copy.

Misapplication of wheel chocks could lead to serious personal injury to Seattle City Light employees or the general public.

3. Definitions

Gross vehicle weight rating (GVWR): is the maximum allowable total mass of a road vehicle or trailer when loaded. This includes the weight of the vehicle itself plus fuel, passengers, cargo, and trailer tongue weight. The GVWR can usually be found on a placard or sticker on or around the equipments drivers door jam.

Light duty (LD): for this standard shall be any truck or equipment with a GVWR of less than 19,000 pounds. Cars and sport utility vehicles (SUVs) with a GVWR of less than 8,000 pounds are outside the scope of this standard.

Medium duty (MD): is any equipment that has a GVWR between 19,001 and 33,000 pounds.

standards coordinator	standards manager	unit director
John Shipek	John Shipek	Pamela S. Johnson

3. Definitions, continued

Heavy duty (HD): is any equipment that has a GVWR between 33,000 and 54,000 pounds. Equipment with a GVWR greater than 54,000 pounds is outside the scope of this standard.

Grade: is typically referred to in terms of percent. It is equal to:

$$\frac{\text{Rise x 100}}{\text{Run}}$$

Example:

$$\text{13\% grade} = \frac{13}{100} \times 100$$

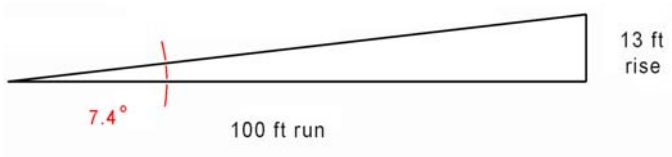

Note: Percent grade should not be confused with an angle expressed in degrees. They are not equivalent.

4. General Requirements

Drivers shall apply wheel chocks whenever their light, medium, or heavy duty vehicle or equipment is parked.

The only wheel chock approved for use at Seattle City Light is cited in Material Standard 7609.30 and assigned Stock Number 760931.

Aluminum wheel chocks acquired before the development of Material Standard 7609.30 may be used with the approval of Civil/Mechanical Engineering.

Rubber wheel chocks, or any other type, shall not be used.

To be applied correctly, each wheel chock needs to be pushed snugly against the downhill side of the tire.

Caution: Never chock just one front tire.

Wheel chocks should always be applied in pairs across the same axle.

The same chocking rules apply whether:

- the street surface is dry or wet
- the street surface is asphalt or concrete
- the vehicle is facing up grade or down grade

If a chock is involved in a failed parking brake event, obtain new chocks from the warehouse and return the affected unit(s) to Fleet Services for inspection.

Refer to Section 7 for a list of the twenty steepest streets in Seattle.

5. Detailed Requirements as Text

5.1 Light Duty (LD) Trucks and Equipment

Minimum of 2 wheel chocks anytime LD equipment is parked on a hill of any grade. Apply the wheel chocks to tires of one axle on the down hill side, street side and curb side.

5.2 Medium Duty (MD) Equipment

Minimum of 2 wheel chocks anytime MD equipment is parked on a hill of any grade. Apply the wheel chocks to tires of one axle on the down hill side, street side and curb side.

5.3 Heavy Duty (HD) Equipment

Minimum of 2 wheel chocks anytime HD equipment is parked on a hill with less than *13 percent grade.* Apply the wheel chocks to tires of one axle on the down hill side, street side and curb side.

When on level ground, apply 2 wheel chocks, front and rear of one rear axle tire.

Minimum of four wheel chocks anytime HD equipment is parked on a hill with *13 percent grade or* greater. Apply the wheel chocks to tires of both axles, two on each, on the down hill side, street side and curb side.

If in doubt of hill grade use four (4) wheel chocks.

6. Detailed Requirements in Graphical Format

Figure 6 Required Number Of Wheel Chocks, Minimum

	LD	MD	HD
> 13% or if in doubt	2	2	4
13%	2	2	2
any hill	0	0	2
level			

Grades not shown to scale

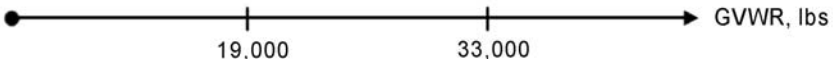

7. Twenty Steepest Streets in Seattle

Percent Grade	Street Name	From	To
21	E Roy St	25th Av E	26th Av E
20	W Blaine St	9th Av W	10th Av W
20	E Terrace St	Randolph Av	Erie Av
20	SW Charlestown St	59th Av SW	60th Av SW
19	Warren Av N	Prospect St	Highland Dr
19	W Newell St	3rd Av W	4th Av W
19	S Charles St	29th Av S	Yakima Av S
19	E Boston St	Harvard Av	Broadway E
19	E Ward St	25th Av E	26th Av E
18	E Highland Dr	24th Ave E	25th Av E
19	E Lee St	24th Ave E	25th Av E
18	E Roy St	Melrose Av E	Bellevue Av E
18	Queen Anne Av N	Florentia St	Etruria St
18	W Bertona St	12th Av W	13th Av W
18	Highland Dr	4th Av N	5th Av W
18	SW College St	Hobart Av SW	Halleck Av S
18	S Dakota St	41st Av S	42nd Av S
18	S Cooper St	64th Av S	65th Av S
18	NW 48th St	2nd Av NW	3rd Av NW
18	1st Av N	Ward ST	Prospect St

8. References

SAE J348, SAE International, Surface Vehicle Standard, revision June 1990

7609.30; “Wheel Chocks, Aluminum”; Material Standard, SCL

Ng, Sharon; SCL civil engineer and subject matter expert of 0057.03 (sharon.ng@seattle.gov)

Shipek, John; SCL Standards Engineer, subject matter expert and originator of 0057.03 (john.shipek@seattle.gov)

Haggard, Rick; City of Seattle Fleet Project Manager and subject matter expert of 0057.03 (rick.haggard@seattle.gov)

Brewer, Steve; SCL Line Crew Chief and subject matter expert of 0057.03 (steve.brewer@seattle.gov)

www.seattle.gov/transportation/steepest.htm

WILDLIFE PROTECTION, SMALL BIRDS AND ANIMALS

1. Scope

This construction standard provides the requirements and details for the installation of wildlife protection devices on SCL structures and equipment for small birds and animals.

2. Application

This document provides direction to SCL crews about when, where and how to properly install wildlife protection devices on SCL structures and equipment.

Wildlife protection devices are intended to be used on new construction or at existing locations with repeated avian or wildlife caused outages. The devices may also be applied at the direction of engineering or management.

Wildlife protection devices are needed when structures are located in avian sensitive areas as described on the SCL Environmental Affairs' avian protection map. This map can be found at http://lc543WAM/AvianProtection and contains the sensitivity zones and the location of existing avian protection equipment.

Criteria for avian sensitivity include areas falling within 200 feet of the following:

- parks
- Sensitive Areas Ordinance (SAO) wetlands
- riparian areas
- lakes
- coastal waters
- wildlife areas
- Priority Habitat and Species (PHS) spatial view

standards coordinator	*standards manager*	*unit director*
Curtis Lu	John Shipek	Pamela S. Johnson

3. Construction Notes

3.1 Install wildlife protection devices on all three phases.

3.2 Outage may be necessary to do installation.

3.3 Install wildlife guard (580776) on transformer bushing if not already installed.

3.4 If wildlife connector cap (013043) is damaged, replace with new.

3.5 Use insulating tape when wildlife protection devices cannot be installed or applied.

3.6 Use insulating tape on exposed connections.

3.7 Self amalgamating, insulating tape may only be installed on de-energized and grounded systems.

Upon application, the tape amalgamates the overlapped layers together, producing a complete seal. A single layer of tape, two-thirds overlapped, will provide an AC voltage withstand rating of 15 kV. A second layer will increase the AC voltage withstand rating to 35 kV.

Surface should be free of sharp edges or burrs and thoroughly cleaned and degreased before applying. Use sufficient tension to provide snug fit, but do not stretch more than 10 percent.

Although insulating tape will stick to itself and other insulating materials, it will not adhere to metal or porcelain allowing easy removal.

3.8 Plastic bird spikes may be glued, nailed, screwed, or tied down. One standard tube of outdoor rated adhesive (not silicone based) will secure approximately 24 feet of spike sections to steel, brick, stone, or concrete. Use rust-proof, #8 wood screws for mounting to wood, ten screws per two-foot section. Use UV protected tie-wraps for mounting to curved surfaces.

4. Figures, Location of Wildlife Protection Devices

Figure 4.1, Pole Top Transformer

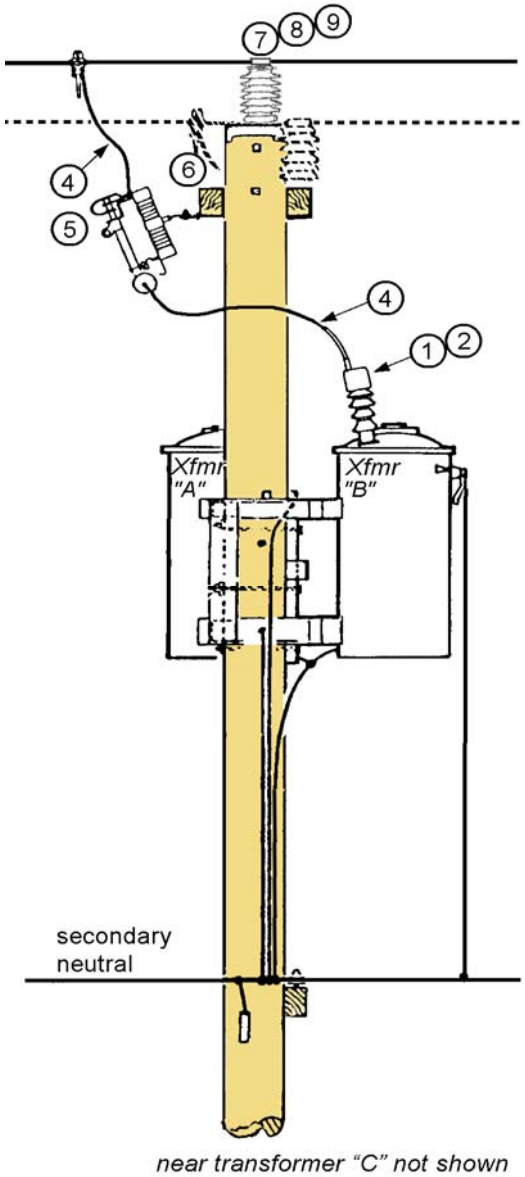

4. Figures, Location of Wildlife Protection Devices, continued

Figure 4.2, Terminal Pole

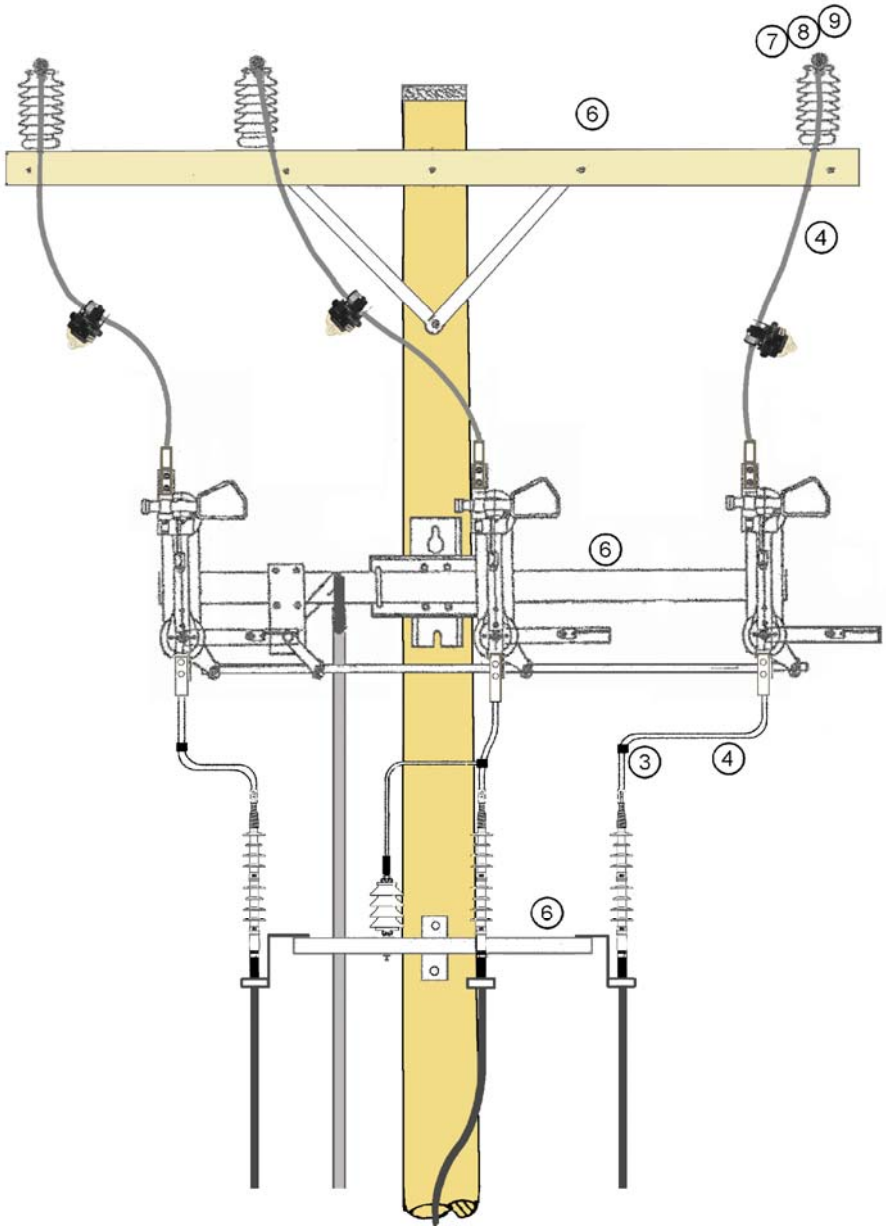

5. Material List

Item No	Item	Description	Application	Stock No	Image
1	Wildlife Guard	**–**	Installed on top of wildlife connector cap on pole top transformer's primary bushing (see note 3.3)	580776	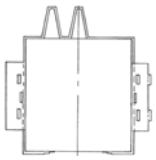
2	Wildlife Connector Cap	–	Installed on pole top transformer's primary bushing (see note 3.4)	013043	
3	Self Amalgamating Silicone Rubber, Insulating Tape	2-inch wide by 36-foot long roll	Installed on any exposed connections or exposed equipment (see notes 3.5, 3.6 and 3.7)	013048	
4	Split Silicone Rubber Insulating Hose	up to 1.20-inch	Installed on exposed jumper wire	013044 013045 013046 013047	
5	Cutout Cover	–	Installed on the line side of a cutout	013042	
6	Plastic Bird Spikes	7-inch coverage by 2-foot section	Installed on any equipment or structure (see note 3.8)	013049	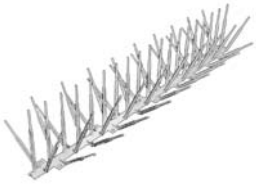

5. Material List, continued

Item No	Item	Description	Application	Stock No	Image
7	Line Protector	single arm/pin	Installed on primary insulator and wire	013040	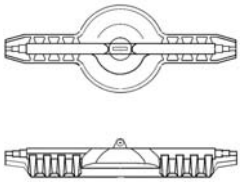
8	Pin Insulator Cover	–	Installed on primary insulator	013041	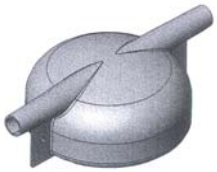
9	Raptor Protection Cover	single arm/pin	Installed on primary insulator and wire	013038	
		or double arm/pin		013039	

6. References

6910.10; "Wildlife Protection Products, Assorted;" Material Standard; SCL

6910.30; "Split, Silicone Rubber, Insulating Hose;" Material Standard; SCL

6910.40; "Self Amalgamating, Silicone Rubber, Insulating Tape;" Material Standard; SCL

6910.07; "Plastic Bird Spikes;" Material Standard; SCL

http://lc543WAM/AvianProtection; avian protection map; SCL

Lu, Curtis; SCL Standards Engineer, originator of 0072.01 (curtis.lu@seattle.gov)

Nobles, Larry; SCL IT, subject matter expert of avian protection map (larry.nobles@seattle.gov)

Suggested Practices for Avian Protection on Power Lines: The State of the Art in 2006; Avian Power Line Interaction Committee (APLIC), Edison Electric Institute, APLIC, and the California Energy Commission; Washington, D.C and Sacramento, CA; 2006

Tressler, Ron; SCL DEA, subject matter expert of 0072.01 (Ron.Tressler@seattle.gov)

BRACKET, COMMUNICATIONS CABLE ATTACHMENT

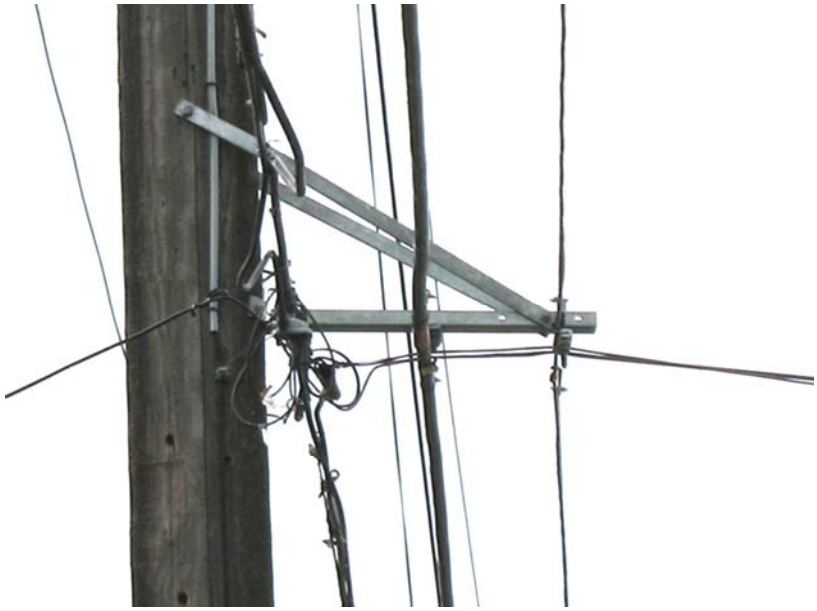

Figure 3.1, Location on Pole

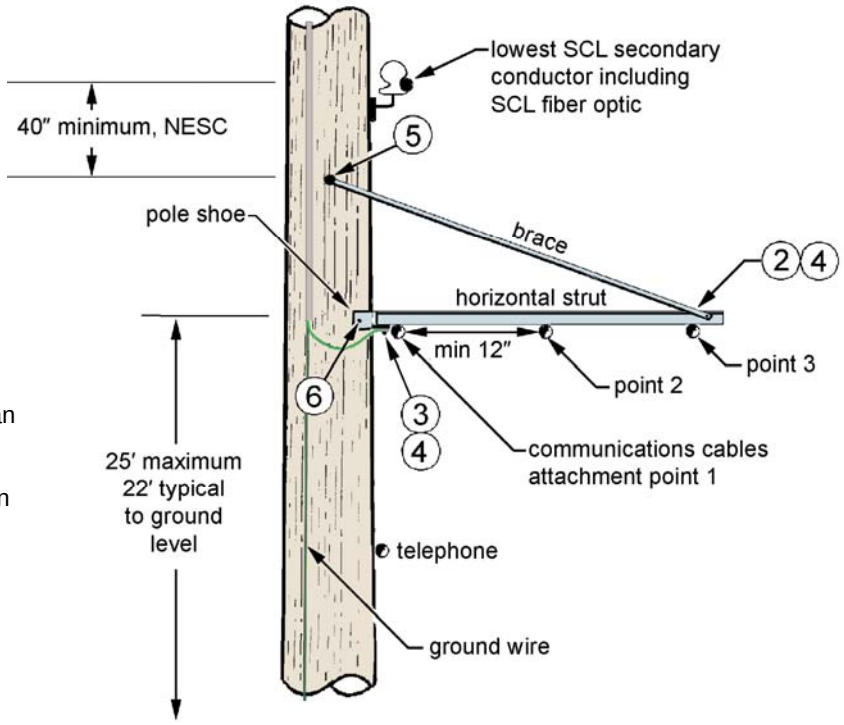

1. Scope

This construction standard provides the requirements and details for the installation of communications cable attachment brackets for additional communication lines to be added.

2. Application

This document instructs SCL crews how to construct and install the communications cable attachment bracket and clarifies clearance requirements.

3. Construction Notes

3.1 Bracket Height

The bottom of the bracket must be no higher than 25 feet above ground level. Typical height is 22 feet. Reference clearance requirements in SCL Construction Standard 0093.02, “Attachments on Standard Utility Poles.”

3.2 Separation

The distance between the tallest point on the bracket braces and the lowest SCL secondary conductor (including SCL fiber optic) must be a minimum of 40 inches as required by the NESC.

standards coordinator	standards manager	unit director
Devyn Byrnes	John Shipek	Pamela S. Johnson

3. Construction Notes, continued

3.3 Grounding

To ground the communications bracket, push ground wire and connector splice (Item 11) inside terminal lug (item 12) one inch and crimp with Nico Press. Attach lug between 1/2-inch bolt (item 3) and nut.

Figure 3.3a, Ground Lug

item 12 item 11 item 7

Figure 3.3b, Nico Press

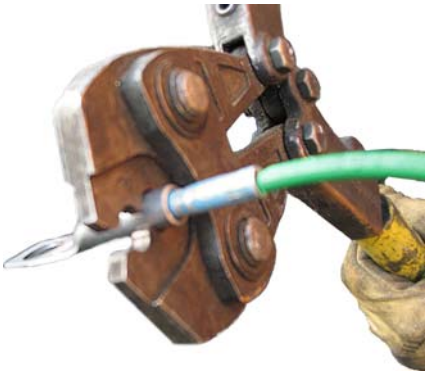

Figure 3.3c, Routing Ground Wire

secure lug to bracket with nut

3.4 Communications Bracket Strut Orientation

Orient the flat side of the horizontal strut down – open side of the U-shape, pointing up. The pole shoe tab and terminal clamp will sit flush against the underside of the horizontal strut.

4. Material List

Item	Quantity	Description	Stock No.
1	1	COMMUNICATIONS BRACKET, includes one horizontal strut channel, two braces, and one pole shoe	010408
2	1	BOLT, machine, galvanized 1/2" x 4-1/2"	780803E
3	1	BOLT, machine, galvanized 1/2" x 1-1/2"	780794E
4	2	WASHER, lock, split, galvanized 1/2"	584255E
5	1	BOLT, length can vary	780847E
6	2	BOLT, lag, 1/2" x 4", fetter drive	785261E
7	as required	WIRE, THWN, 600 V copper #8 AWG	612277
8	1	TAP, split bolt, parallel type	668861E
9	as required	MOULDING, plastic	582060E
10	as required	STAPLES, moulding	583200E
11	1	CONNECTOR SPLICE, compression, copper	677354E
12	1	TERMINAL LUG, compression	677071E

5. References

0093.02; "Attachments on Standard Utility Poles;" Construction Standard; SCL

5631.1; "Bracket, Communications, Cable Attachment;" Material Standard; SCL

Brewer, Steve; SCL Crew Chief; subject matter expert; (steve.brewer@seattle.gov)

Byrnes, Devyn; SCL Standards Student Intern; subject matter expert and co-originator of 0093.06; (devyn.byrnes@seattle.gov)

Lu, Curtis; SCL Standards Engineer; subject matter expert and co-originator of 0093.06; (curtis.lu@seattle.gov)

POLE ATTACHMENTS, AUTOMATED METER READING AND CELLULAR PHONE ANTENNAS

1. Scope

This standard covers requirements for the installation of antenna structures, antenna feedlines, conduit risers and associated equipment on Seattle City Light (SCL) distribution poles. These antennas and appurtenances include, but are not limited to, those associated with Automated Meter Reading (AMR) communications devices and Distributed Antenna Systems (DAS).

2. Application

This standard provides installation details and requirements for antenna appurtenances on SCL poles and streetlights. This standard is used by SCL crews, customers and contractors.

3. Serving Voltage

3.1 Where single phase service is required, the serving voltage will be 120/240 volts. 120/208 volt, single phase, three wire service will not be provided.

3.2 Where three phase service is required, contact the SCL Customer Service Representative.

3.3 Neutral wire must be clearly marked on the service equipment.

4. Codes and Permits

4.1 All necessary permits shall be obtained by the company owning the antenna. This includes, but is not limited to, City of Seattle street use permits, land use and environmental permits.

4.2 Installation must meet all applicable codes and SCL construction standards. In case of conflict the most stringent requirement will prevail.

4.3 Electrical services associated with installation shall meet all applicable provisions of the latest revision of the National Electrical Code. Services with provision for alternative power sources shall be designed to eliminate any possibility of backfeed into the distribution power system.

standards coordinator	*standards supervisor*	*unit director*
Curtis Lu	John Shipek	Darnell Cola

5. Grounding and Bonding

5.1 All metallic parts of the installation on the pole shall be bonded together and grounded.

5.2 A copper ground wire, #6 AWG minimum size, shall be installed from the base or feedline connection point of the antenna to a ground rod at the base of the pole. This ground wire shall be located on the same face of the pole and be adjacent to the antenna feedline conduit. The ground wire shall be permanently connected to the ground rod.

5.3 Where a SCL neutral conductor exists, the ground wire shall be permanently bonded to the SCL neutral conductor at the neutral conductor level by SCL crews.

5.4 A ground rod, 8 feet minimum in length, shall be installed (in addition to any existing SCL grounding electrodes) at the base of the pole. This installation shall meet or exceed the requirements of Construction Guideline D16-2.

5.5 The ground wire shall be covered by a protective molding for its entire length on the pole except at the point where it must be exposed for bonding to the SCL neutral.

5.6 The SCL and communication ground rods shall be bonded together using copper #6 AWG wire.

6. Conduit Risers

6.1 The maximum number of conduits allowed on the pole shall be four 4-inch conduits conforming to the spacing requirements in Construction Guideline U7-10, unless special approval is granted by the pole engineer.

6.2 All conduits and/or feed lines shall be mounted on the face of the pole.

6.3 All conduits and/or feed lines over 2 inches nominal diameter shall be installed on standoff brackets. A minimum space of 4-1/2 inches (for climbing) shall be maintained between the pole and the closest part of the conduit. The standoff bracket installation shall conform to Construction Guideline U7-10. In particular, the support bracket with brace shown in Section 4 must be used as shown. The standoff brackets used shall be Stock Number 686796 or preapproved equivalent. These brackets may be purchased from SCL Stores at 3613 4th Ave. South.

6.4 Conduits shall be gray electrical grade Schedule 40 or 80 PVC.

6.5 Conduits between 2 feet below the ground line to 8 feet above the ground line shall meet the requirements of Sections 6.3 and 6.4 above, however, code and/or permit conditions may require a thicker wall conduit or different material.

6.6 Polyethylene and CPVC conduits are not acceptable.

6.7 Telecommunications conduit shall be fed continuously in the equipment box.

7. Equipment Mounted on Pole

7.1 The number of installations and quantity of equipment and antennas will be limited to the space available on the existing or replaced pole. Antenna installations may not be allowed on primary corner poles, poles with transformers, capacitors, primary cable terminations, primary switches or primary metering or other locations where adequate clearance is not available. Only one antenna installation in the primary zone will be allowed on a pole.

7.2 No service entrance equipment, including metering, will be allowed on the pole.

7.3 Radio or other cabinets will be allowed on the pole only if they comply with the maximum size allowed by Construction Guideline D2-1.3.

7.4 Only one antenna related box per pole will be allowed. First come, first served.

7.5 The above types of equipment may be pad mounted provided that no equipment is located nearer than ten feet from the pole.

7.6 See Section 11 below for required clearances.

7.7 Conduit running up to SCL secondary conductors or antenna cables running up to a box shall be on the street side of the pole. All conduit running from the box to the antenna shall be on the face of the pole.

7.8 The equipment box shall be clearly marked with the company equipment ID#, the company name, and the emergency contact phone number.

7.9 High power transmitting equipment, such as DAS, must be equipped with a disconnect switch.

8. Materials Provided by Antenna Owner:

These materials shall meet or exceed SCL material standards where SCL specifications exist.

9. Aesthetics:

Antenna installations shall use available stealth technology and shall be made as visually obscure as reasonably possible.

10. Community Notification and Disputes

10.1 It shall be the responsibility of the applicant for the antenna installation to resolve any and all complaints resulting from the installation including complaints relative to increased pole height or impaired view or visibility. The sole exception shall be complaints relating exclusively to SCL facilities.

10.2 All complaints regarding the antenna installation will be referred to the owning company. The owning company shall provide SCL a phone number for reception and resolution of complaints.

11. Clearances for Antenna Units Mounted Between Neutral and Primary

A minimum vertical clearance of 12 inches above the neutral and 36 inches below primary voltage conductors shall be maintained for antenna units mounted between neutral and primary. The minimum horizontal and/or slant clearance of 36 inches shall be maintained between all conductors energized at primary voltage and all parts of the pole mounted unit, antennas and cables. These vertical, slant and horizontal clearances also apply to a cutout door when in the open position. The minimum horizontal clearance from the surface of the pole to the antenna element and/or the pole mounted unit shall be 4-1/2 inches.

12. Installation and Maintenance:

SCL crews will install and maintain all equipment, antennas and feed lines located at or above the level of the power neutral conductor on the pole. Fees for this work are established in the pole agreement contract.

13. Outage Notification:

SCL will make every reasonable effort to notify equipment owners of outages 24 hours in advance when possible. However, SCL reserves the right to disconnect power to installations without prior notice when necessary.

14. References

0093.06; “Bracket, Communications Cable Attachment”; Construction Standard; SCL

D2-1.1; “Attachments on Standard Utility Poles”; Construction Guideline; SCL

D2-1.3; “Cable TV Power Supply Attachments”; Construction Guideline; SCL

D2-1.4 (cancelled); “Automated Meter Reading Antenna Pole Attachments and Cellular Phone Antennas Mounted below Primary Conductors”; Construction Guideline; SCL

D2-3; “Clearances from Structures and Ground”; Construction Guideline; SCL

D9-52; “15/26 kV Distribution Crossarm Details”; Construction Guideline; SCL

D16-2; “Grounding Rod Installation”; Construction Guideline; SCL

Haberman, Douglas; SCL Joint Use Strategic Advisor; subject matter expert for 0095.05 (douglas.haberman@seattle.gov)

IEEE/ANSI C2; “National Electrical Safety Code”; IEEE/ANSI; 2007

Lu, Curtis; SCL Standards Engineer; subject matter expert and originator of 0095.05 (curtis.lu@seattle.gov)

NFPA 70; “National Electrical Code”; NFPA ; 2008

U7-10; “Conduit Risers On Poles”; Construction Guideline; SCL

15. Mounting Diagrams

15.1 AMR Antenna, Steel Pole Installed

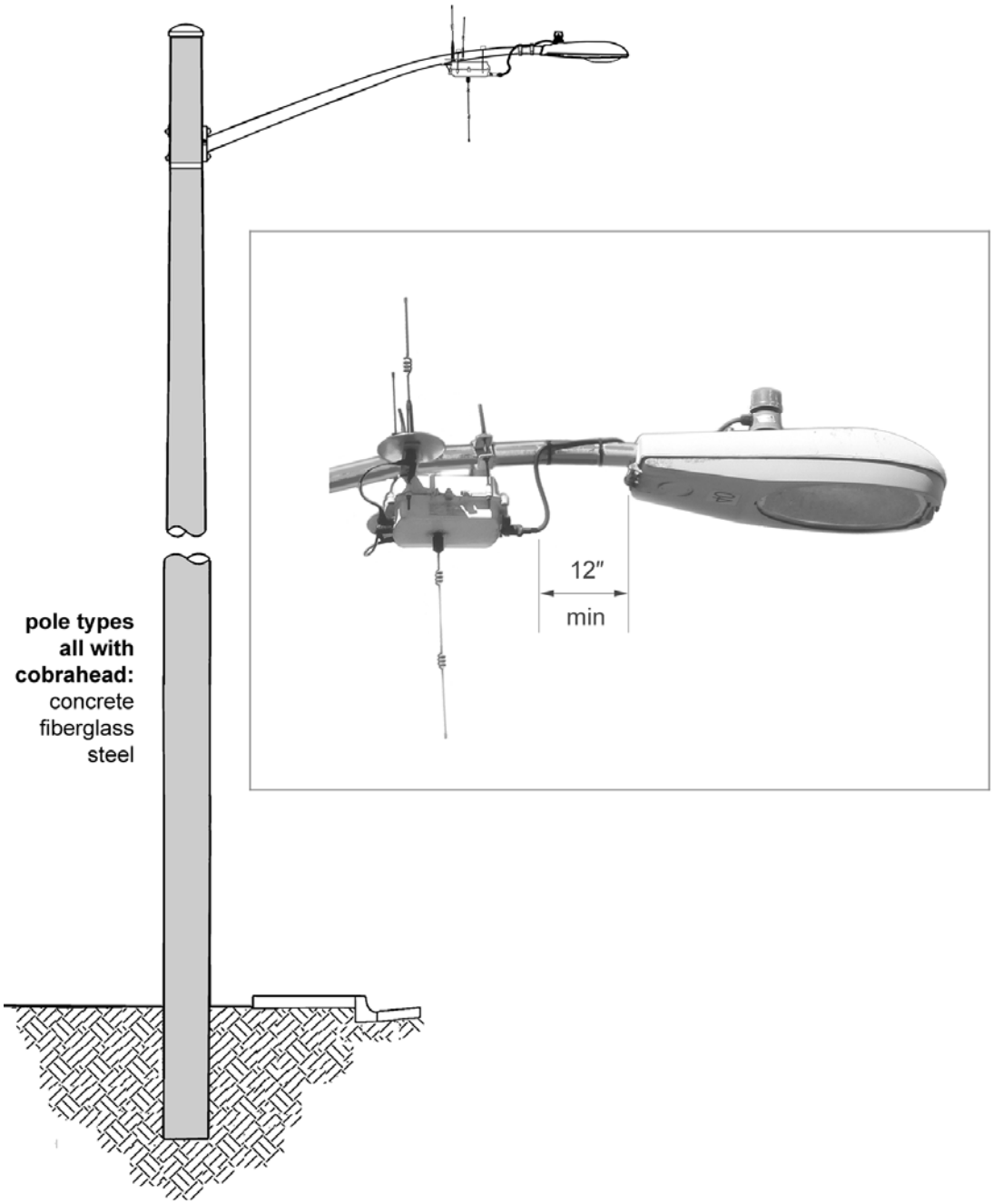

15. Mounting Diagrams, continued

15.2 Pole Mounted AMR Unit On Wood Pole Above Neutral

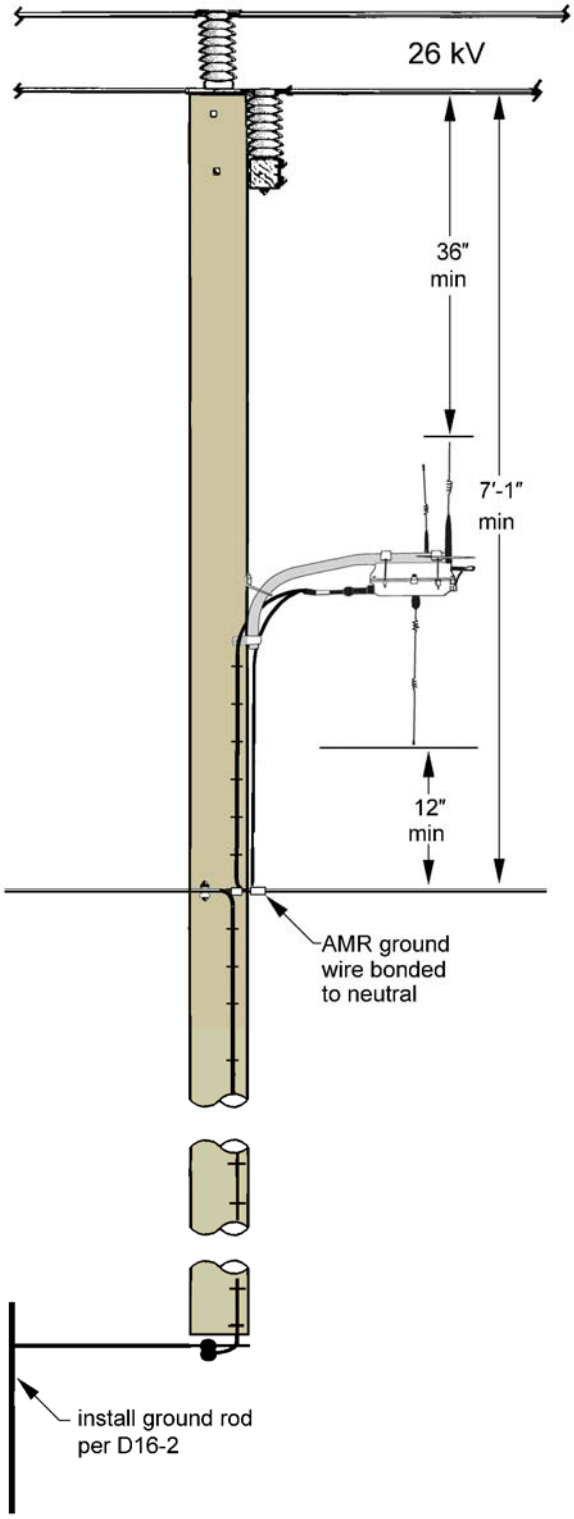

15. Mounting Diagrams, continued

15.3 Pole Mounted DAS Unit On Wood Pole Above Neutral

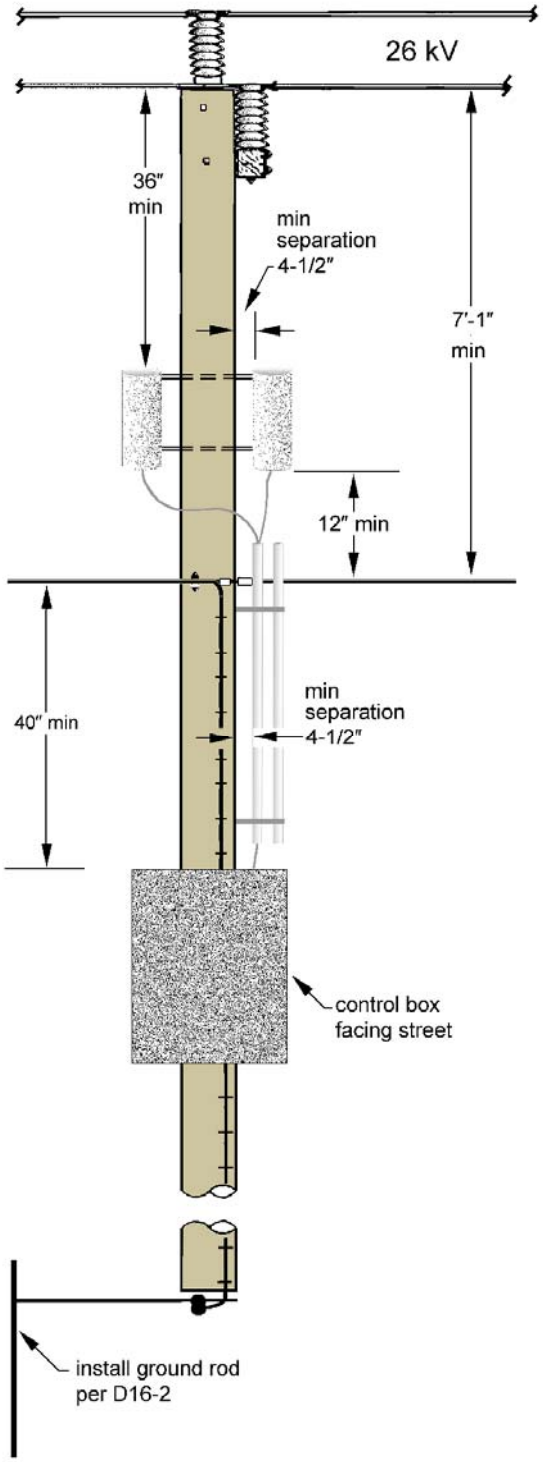

15. Mounting Diagrams, continued

15.4 Master Control Station with Pole Mounted Antenna

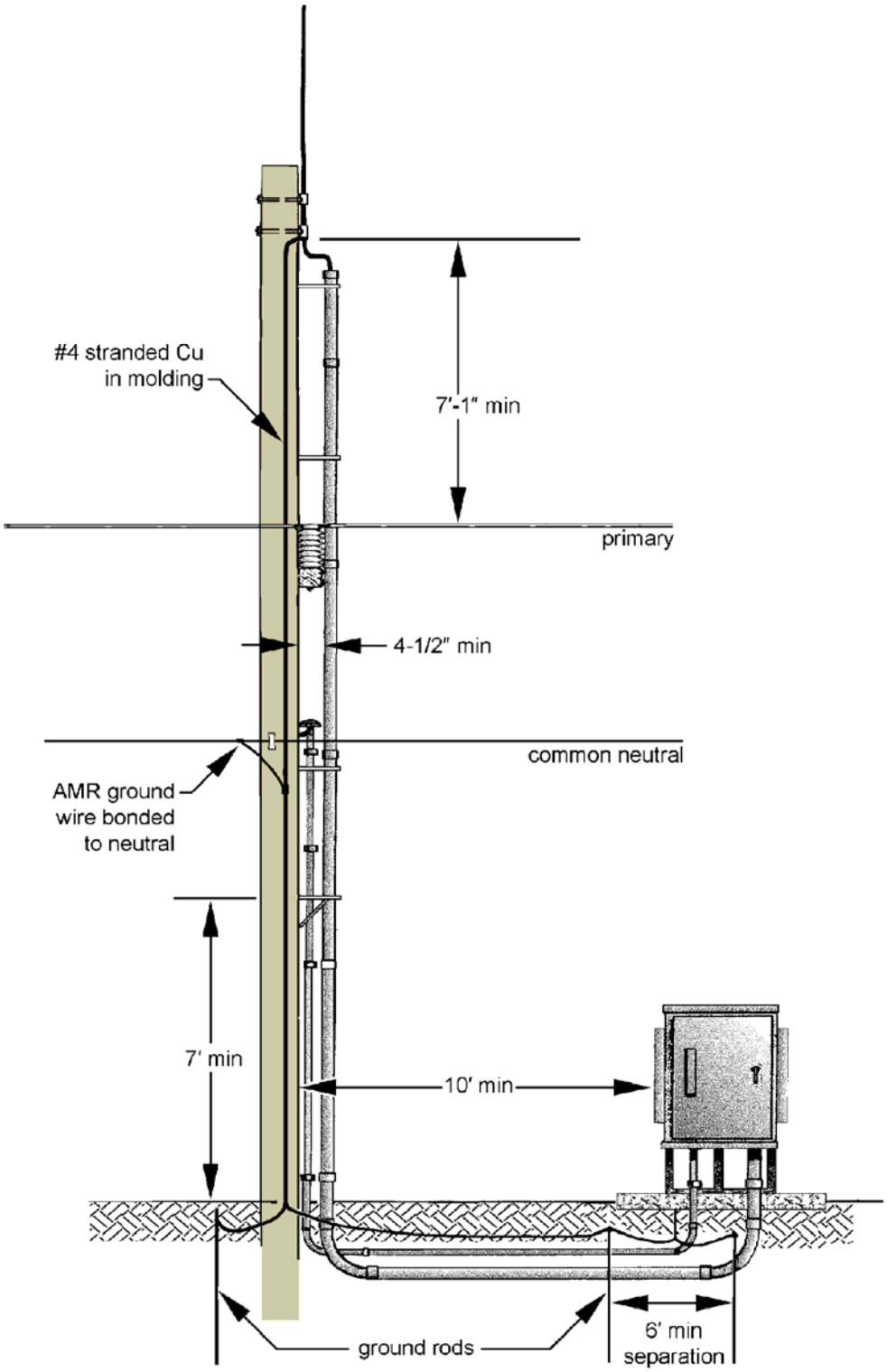

TERMINAL POLE WITH PRIMARY SWITCH, 600 AMP

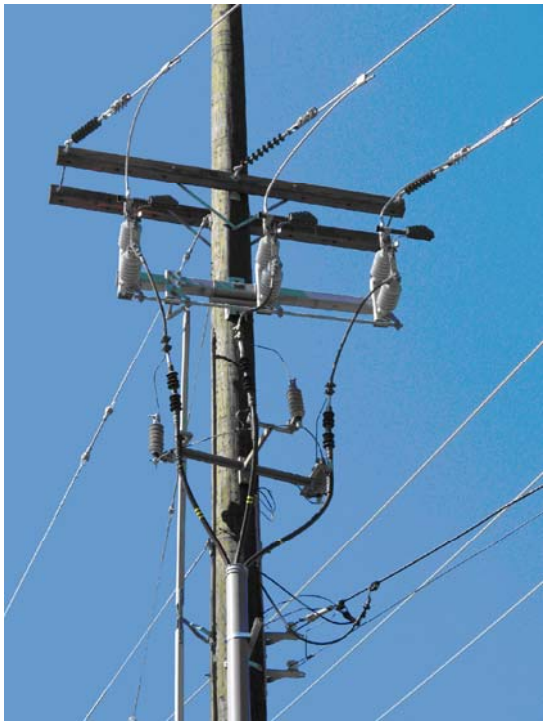

Table of Contents

section	page
1. Scope	1
2. Application	1
3. Definitions	1
4. Details and Design	2
4.1 Terminal Pole	2
4.2 Cross Arm	3
4.3 Switch	4
4.4 Arrester and Cable Termination Bracket Installation	5
4.5 Switch Handle	6
4.6 Grounding	6
5. Construction Notes	8
6. Materials	9
7. References	12

1. Scope

This construction standard covers the construction requirements, equipment, assembly hardware and directions needed to build a 600 Amp Primary Switch Terminal Pole with a single set of primary cables. See future Construction Standard, "Terminal Pole with Primary Switch, 1200 Amp," if two sets of primary cables are required.

2. Application

This document provides direction to SCL crews about how to construct a 600 Amp Primary Switch Terminal Pole. This Standard is used to inform them of what equipment and assembly hardware is required and how the equipment are to be arranged, connected and installed. A primary switch terminal pole is typically located at a deadend pole.

3. Definitions

Terminal pole: The pole where the electrical system transitions from overhead to underground or from underground to overhead.

standards coordinator	*standards manager*	*unit director*
Curtis Lu	John Shipek	Pamela S. Johnson

4. Details and Design

4.1 Terminal Pole

Figure 4.1, Terminal Pole, overview

page 3
4.2 Cross Arm

page 4
4.3 Switch

page 5
4.4 Arrester and Cable Termination Bracket Installation

page 6
4.5 Switch Handle

see section 5, Construction Notes, for height of switch handle

page 7
4.6 Grounding

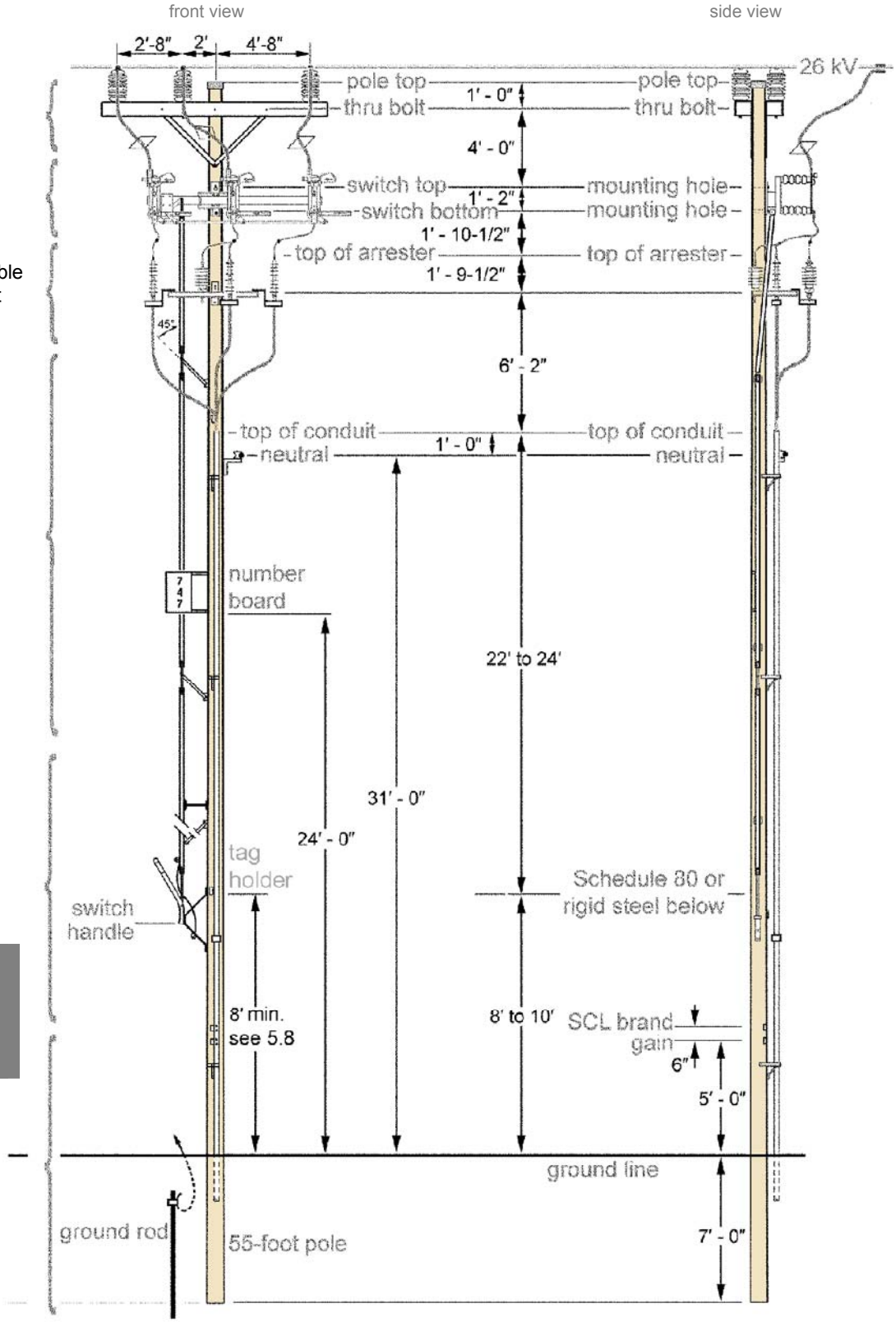

4. Details and Design, continued

4.2 Cross Arm

Figure 4.2a, Cross Arm, front view

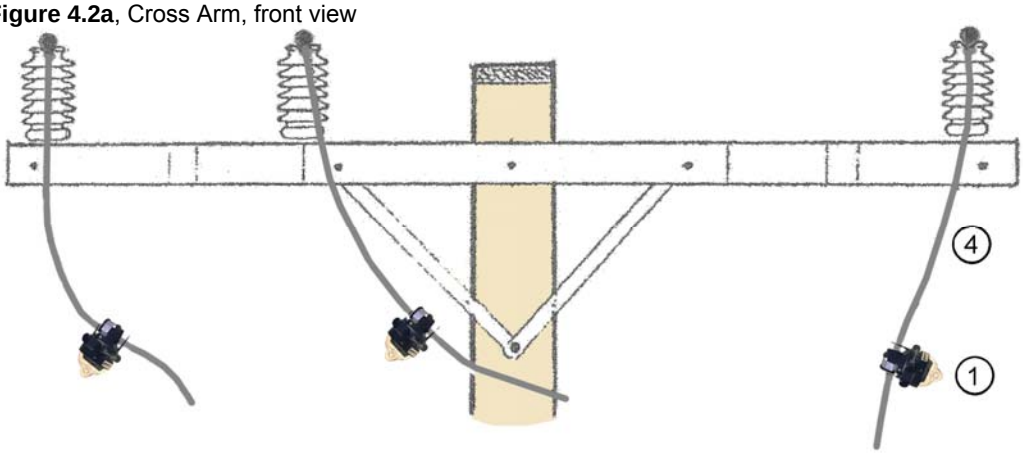

Figure 4.2b, Cross Arm, side view

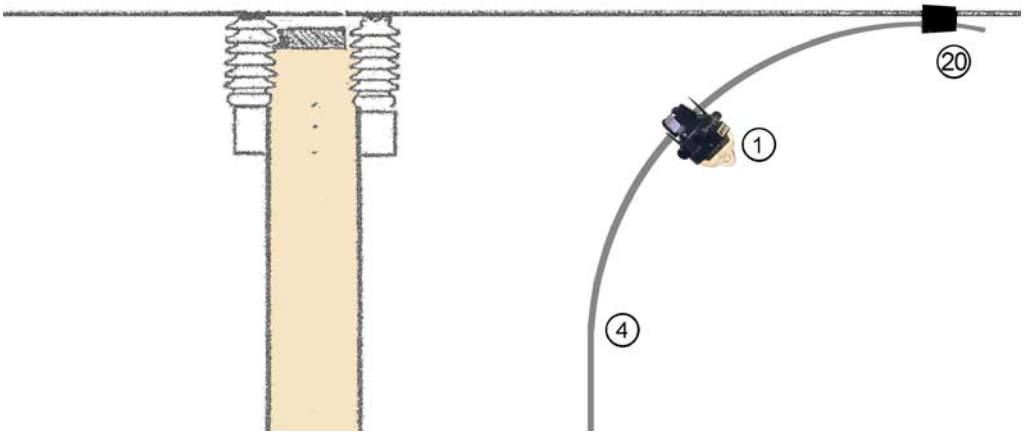

Figure 4.2c, Cross Arm, top view

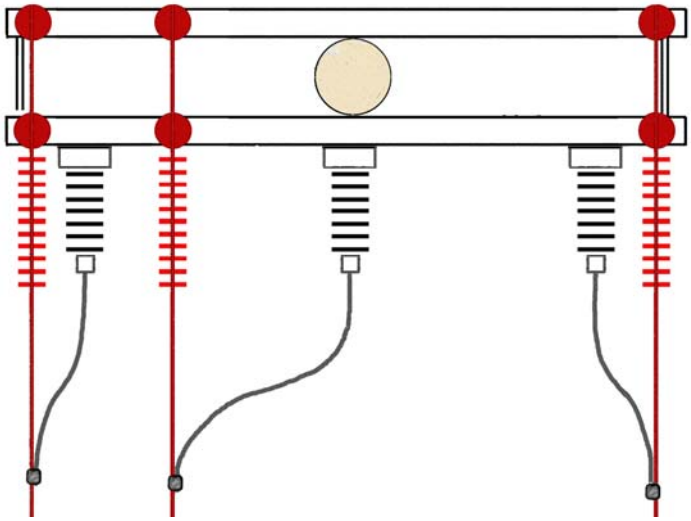

Refer to section 5, Construction Notes

4. Details and Design, continued

4.3 Switch

Figure 4.3a, Switch, front view

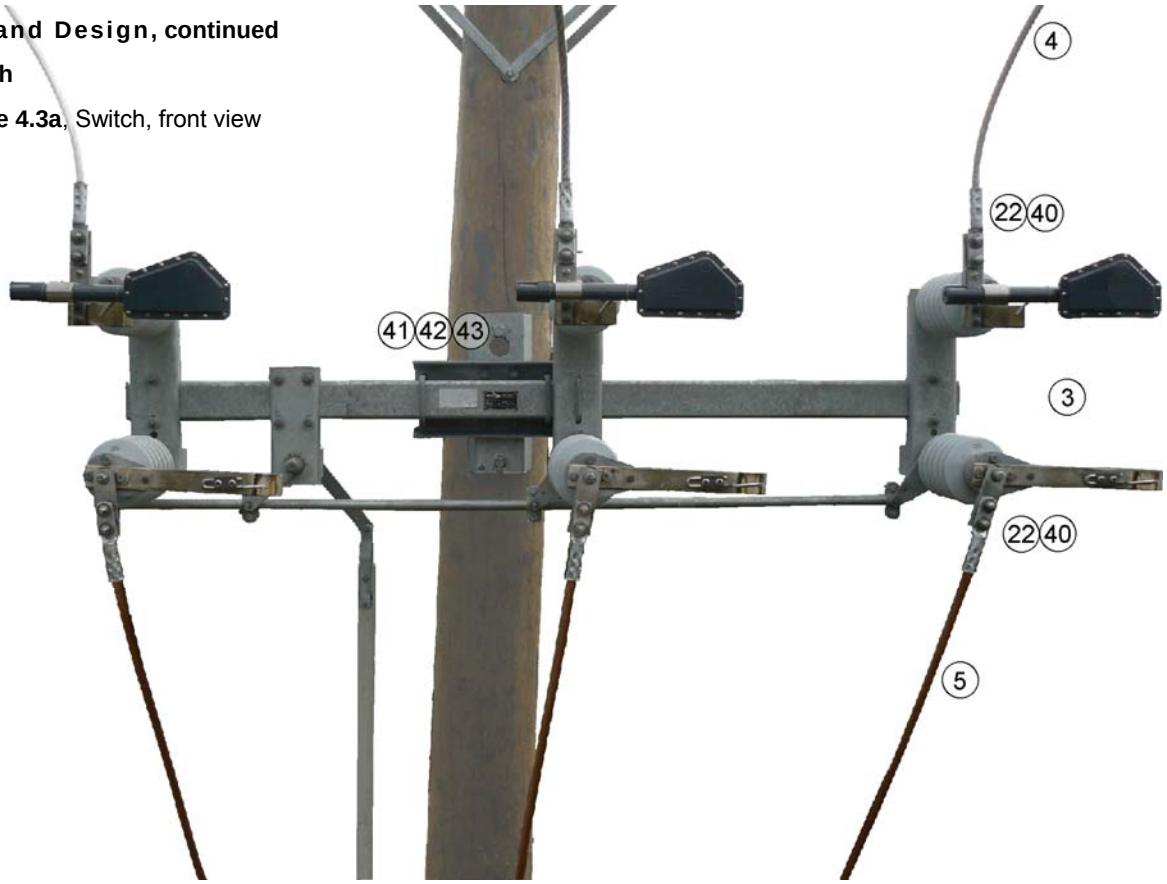

Figure 4.3b, Switch, Connector, side view

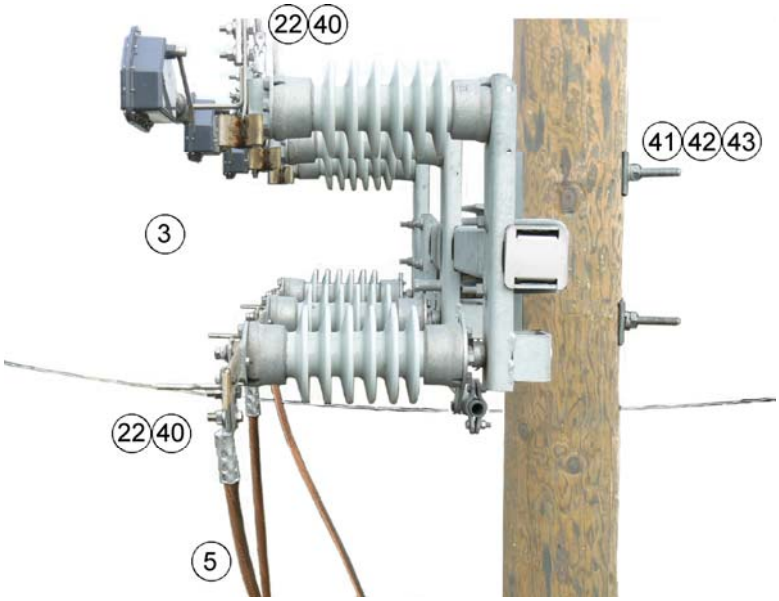

4. Details and Design, continued

4.4 Arrester and Cable Termination Bracket Installation

Figure 4.4a, Arrester and Terminator, front view

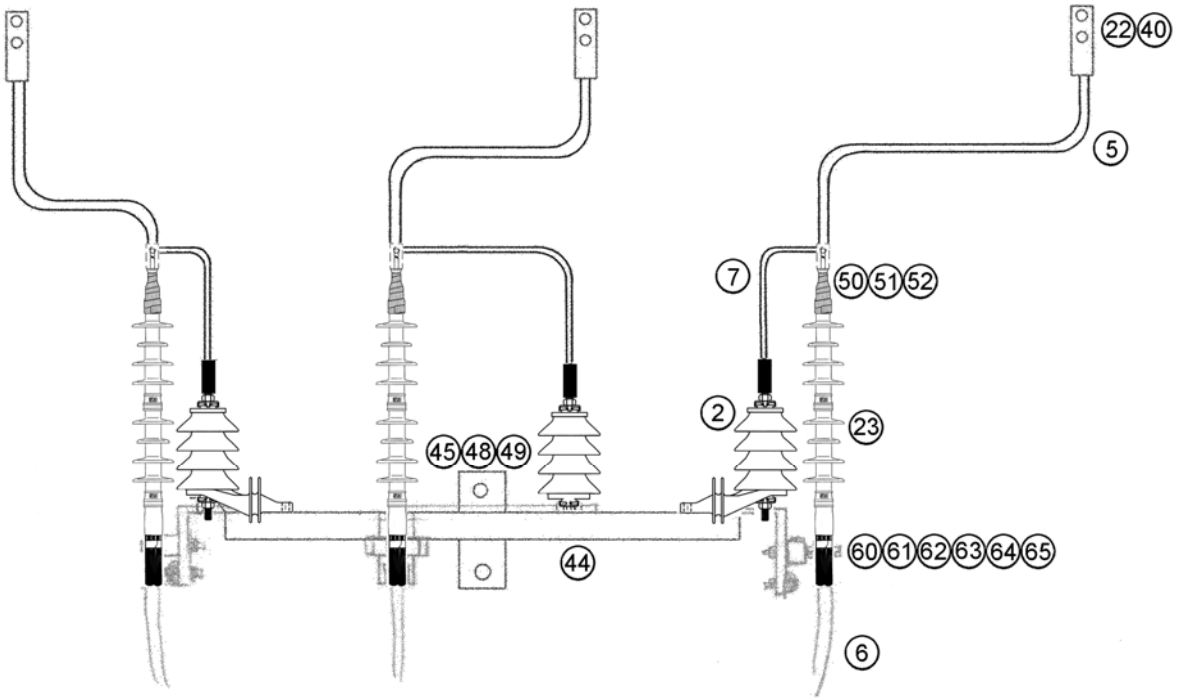

Figure 4.4b, Arrester and Terminator Detail, side view

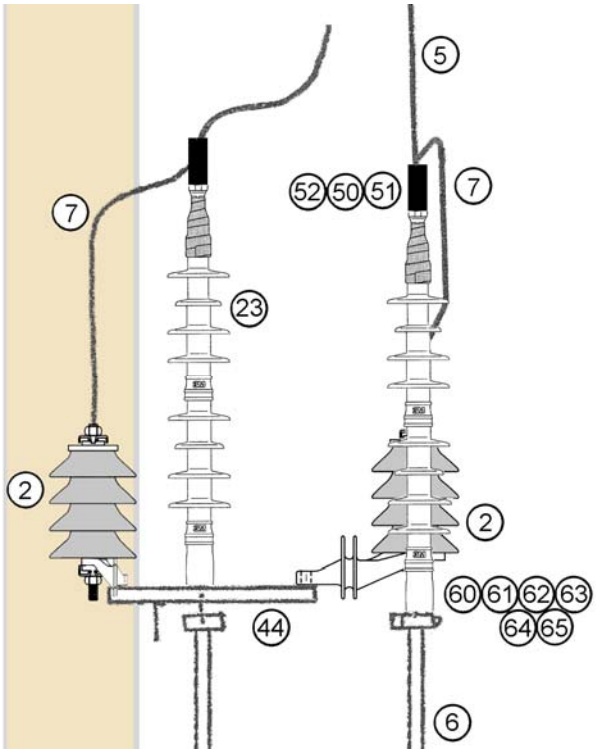

Figure 4.4c, Three Lug Connection Detail, side view

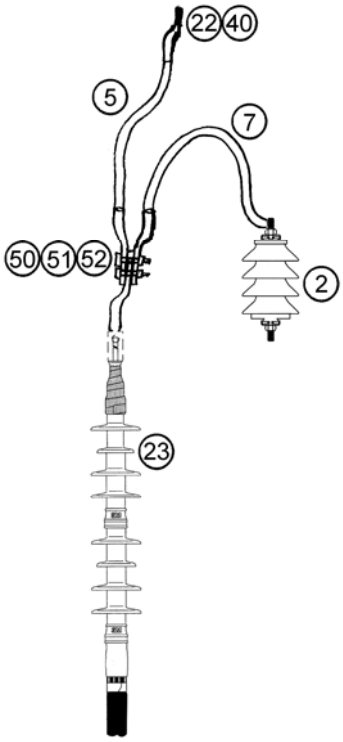

4. Details and Design, continued

4.5 Switch Handle

Figure 4.5a, Switch Handle, front view

Figure 4.5b, Switch Handle, side view

4.6 Grounding

Figure 4.6a, Pole ground, overview

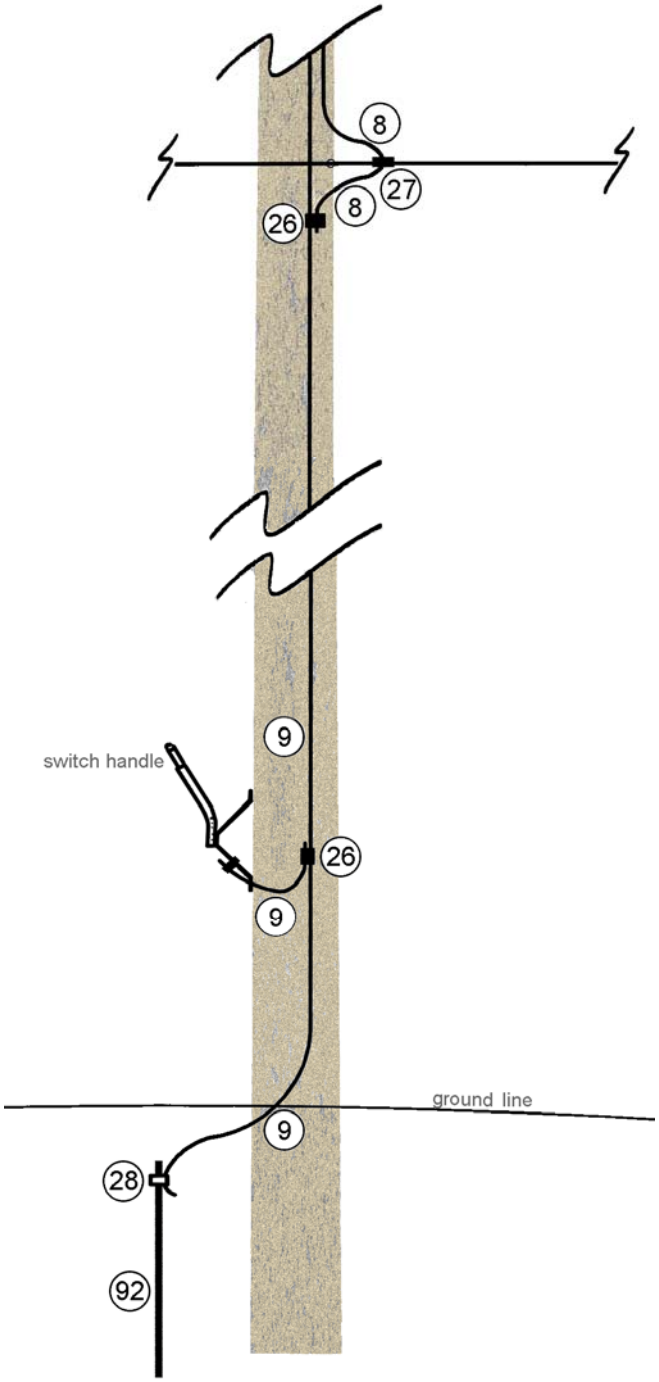

4. Details and Design, continued

4.6 Grounding, continued

Figure 4.6b, Bracket Ground Ring, front view

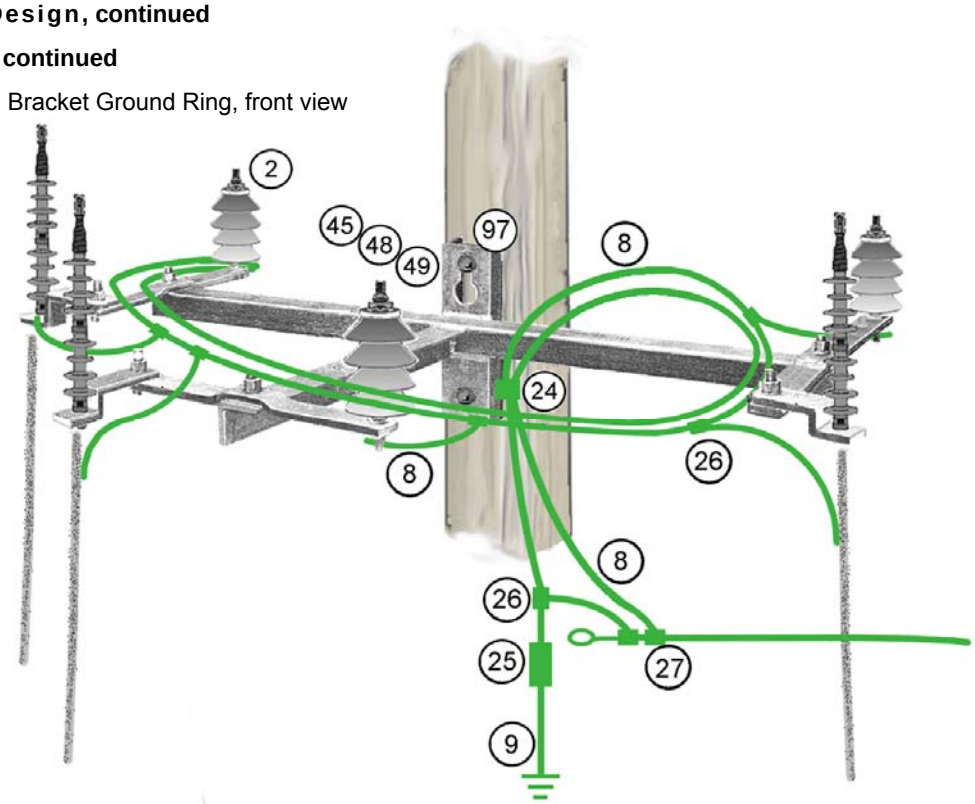

Refer to section 5, Construction Notes

Figure 4.6c, Bracket Ground Ring, top view

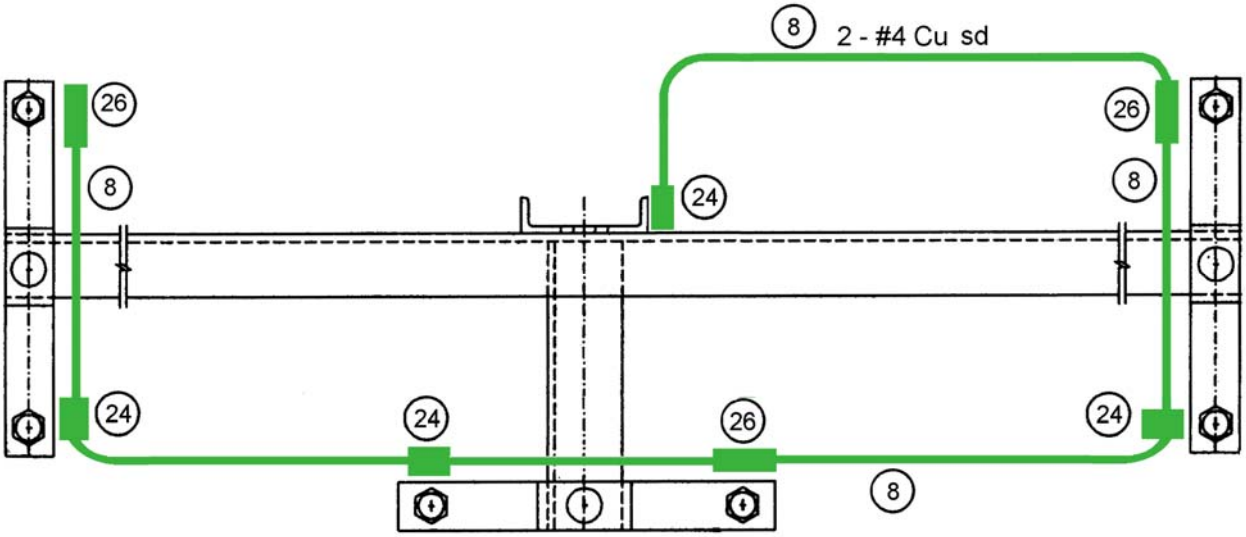

5. Construction Notes

5.1 Arrestor and Cable Termination Bracket Installation (see Figures 4.7a, b, c)

The bracket (Stock No. 686835) may be installed offset to the face of the pole in order to avoid switch riser.

Install bracket using one through bolt (top) and one lag bolt (bottom).

Install double wire grounding as specified in Figures 4.7a, b, c.

5.2 Switch Handle Installation and Placement (see Figure 4.1)

On street side less than 3 feet from street – The switch handle, when in the down position, shall be installed at a minimum of 15 feet above ground line.

On Street Side greater than 3 feet from street - The switch handle shall be installed at 3 feet-6 inches above ground line.

On Sidewalk Side less than 2 feet from sidewalk - The switch handle, when in the down position, shall be installed at a minimum of 10 feet above ground line

On Sidewalk Side greater than 2 feet from sidewalk - The switch handle shall be installed at 3 feet-6 inches above ground line.

5.3 Avian Protection

Refer to Construction Standard 0072.01.

5.4 Arrestor Ground Lead Installation (see Figure 4.7b)

When connecting to an arrester with a ground lead disconnect, make sure the connection is as short and as direct as possible. The ground lead must be flexible enough to allow the disconnector to operate properly.

5.5 Line Angle (see Figure 4.2c)

Maximum feeder line angle at a terminal pole is 15 degrees.

5.6 Overhead Fault Indicator

When installing an overhead fault indicator record the following on the work order drawing/redlines:

1. date of manufacture
2. manufacturer's name
3. part/catalog number

Once recorded, call in to system control center and send the work order drawing to GIS for mapping.

5.7 Cable Support

A cable grip is only needed when the rise is greater than the run. For this purpose, measure the run as the horizontal distance from the center of the curve of the 90 degree bend at the base of the pole to the first vault or handhole. For the rise, measure the vertical distance from the center of the curve to the crossarm. Of course the rise conduit will not extend all the way to the crossarm, only to the support bracket below the crossarm.

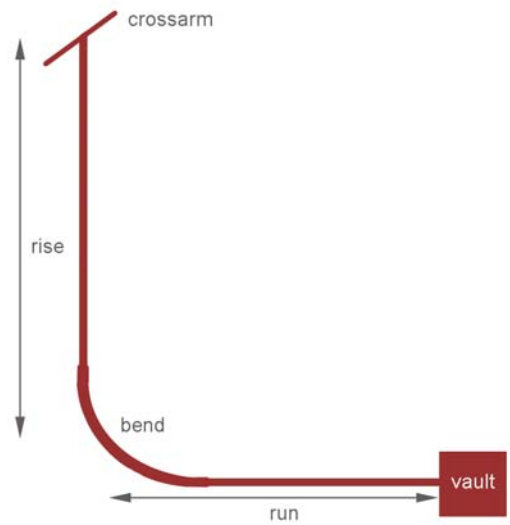

5.8 Operator Tag Holder Placement

The tag holder is installed using two nails on the pole face one foot above switch handle with a minimum height of eight feet.

6. Materials

Complete Material Request using Compatible Units List.

6.1 Compatible Units (CU) List

Description	Category	Compatible Unit ID 1/0	350	500	750	1000	Unit Quantity
arrester/terminator	**AT**	017320A1	017320A3	017320A5	017320A7	017320A9	1
grounding	**GND**	017320G	017320G	017320G	017320G	017320G	1
switch number board	**NB**	SWNB	SWNB	SWNB	SWNB	SWNB	1
switch	**SW**	017320S5	017320S5	017320S5	017320S9	017320S9	1
undergrounding	**UG**	017320U1	017320U3	017320U5	017320U7	017320U9	1
Additional Materials		Stock No.					Item Quantity
overhead fault indicator		765872	765872	765872	765872	765872	3
jumper wire	397.5 AAC	600113	600113	600113	600113	600113	30
	954 AAC	600126	600126	600126	600126	600126	30
wedge taps	954:954	651107	651107	651107	651107	651107	3
	954:397.5	651100	651100	651100	651100	651100	3
	397.5:397.5	651101	651101	651101	651101	651101	3

6.2 Material List

Item	Component Description		Stock No.	1/0	350	500	750	1000	AT	GND	NB	SW	UG
	Equipment												
1	OVERHEAD FAULT INDICATOR		765872	3	3	3	3	3	no Cu, use Stk. No.				
2	SURGE ARRESTOR, metal oxide, intermediate		012593	3	3	3	3	3	3				
3	600A PRIMARY SWITCH		250151	1	1	1	1	1				1	
	Wire/Cable												
4	JUMPER WIRE, depends on feeder size,	397.5 AAC bare Al	600113	30	30	30	+	+	no Cu use Stk. No.				
		954 AAC bare Al	600126	+	+	+	30	30					
5	WIRE, bare, stranded, Cu soft drawn,	500 kcmil	610397		30	30	30	30				30	
		250 kcmil	610412	30								30	
6	CABLE,	round wire concentric neutral jacketed Al, 1/0	012098	+									+
		flat strap shielded Al, 350	012099		+								+
		flat strap shielded Cu, 500	012100			+							+
		flat strap shielded Cu, 750	012101				+						+
		flat strap shielded Cu, 1000	012102					+					+

+engineer has choice of quantity

*crew has choice of quantity, exempt items only

6. Materials, continued

6.2 Material List

Item	Component Description		Stock No.	1/0	350	500	750	1000	AT	GND	NB	SW	UG
7	GROUND WIRE, #2 Cu soft drawn		610434	30	30	30	30	30		30			
8	GROUND WIRE, #4 Cu soft drawn		610208	25	25	25	25	25		25			
9	GROUND WIRE, #4 Copperclad steel		012702	75	75	75	75	75		75			
10	CABLE, UG single conductor, 600 V, XLPE, 750 kcmil, Cu		613743				30	30				30	
11	CABLE, UG single conductor, 600 V, XLPE	#2	613730	+									+
		2/0	613733		+	+	+	+					+
	Connections												
20	WEDGE TAPS, Al and Cu, Ampact type,	954:954	651107	*	*	*	3	3	no Cu, use Stk. No.				
		954:397.5	651100	*	*	*	*	*					
		397.5:397.5	651101	3	3	3	*	*					
23	TERMINATOR, cold shrink,	1/0 EA	686532	3					3				
		350-500 EA	012125		3	3			3				
		750-1000 EA	012126				3	3	3				
24	CLAMP CONNECTOR, flat bar to cable(s)		676694	4	4	4	4	4		4			
25	SPLICE, #4		677355E	3	3	3	3	3		3			
26	VICE JAW CONNECTOR, #4		012173E	5	5	5	5	5		5			
27	WEDGE TAP CONNECTOR, 4/0:#4		651099	1	1	1	1	1		1			
28	GROUND ROD CLAMP, 5/8″		564012E	1	1	1	1	1		1			
	Hardware												
40	WASHER BOLT ASSEMBLY, 2-1/2″		782041	12	12	12	12	12	6			6	
41	BOLT, square head, for switch install, 3/4″ x 16″		780877E	3	3	3	3	3	1			2	
42	WASHER, curved square zinc, 4″ x 4″, 5/8″-7/8″		584775E	3	3	3	3	3	1			2	
43	WASHER, double coil lock, 3/4″		584267E	3	3	3	3	3	1			2	
44	BRACKET, terminator and arrestor mounting		686835	1	1	1	1	1	1				
45	BOLT, square head, for switch handle install, 5/8″ x 16″		780847E									2	
48	WASHER, square zinc, 2-1/4″ x 2-1/4″, 5/8″		585135E	2	2	2	2	2				2	
49	WASHER, double coil lock, 5/8″		584261E	2	2	2	2	2				2	
50	PIGTAIL ADAPTER,	1/0	680056	3									
		350	680578		3								
		500	680579			3							
		750	686075				3						
		1000	010320					3					

+engineer has choice of quantity

*crew has choice of quantity, exempt items only

6. Materials, continued

6.2 Material List

Item	Component Description		Stock No.	1/0	350	500	750	1000	AT	GND	NB	SW	UG
51	COMPRESSION CONNECTOR, Cu,	1/0	677075E	3									
		350	677087E		3								
		500	677091E			3							
		750	677100				3						
		1000	677110					3					
52	TWO BOLT TAP	250	669381E	3	3	3	3	3					
		500-1000	669384	3	3	3	3	3					
53	SPLIT BOLT TAP, #4		668864	3	3	3	3	3					
60	CABLE SUPPORT ADAPTOR		012465	3	3	3	3	3	3				
61	CABLE SUPPORT HEEL,	1/0	011961	3					3				
		350	011962		3				3				
		500	011963			3			3				
		750	011964				3		3				
		1000	012501					3	3				
62	"L" BRACKET		686466	3	3	3	3	3	3				
63	BOLT, 1/2″ x 2″		780796E	3	3	3	3	3	3				
64	WASHER, flat, 1/2″		585025E	3	3	3	3	3	3				
65	WASHER, lock, 1/2″		584255E	3	3	3	3	3	3				
80	STANDOFF BRACKET,	12-1/2″	686786E	2	2	2	2	2					2
		18″	686790E	*	*	*	*	*					*
81	BRACED STANDOFF BRACKET,	12-1/2″	686794E	1	1	1	1	1					1
		18″	686796E	*	*	*	*	*					*
82	CONDUIT STRAP, 5″		689774E	4*	4*	4*	4*	4*					4*
83	PADLOCK, SNM-1		non-stock	2	2	2	2	2				2	
84	CONDUIT, Schedule 40 PVC, 5″		734524	3	3	3	3	3					3
85	COUPLING, female adapter, 5″		734536	1	1	1	1	1					1
86	END BELL, PVC		734949	1	1	1	1	1					1
87	ADHESIVE KIT		012821	1	1	1	1	1					1
92	GROUND ROD, 5/8″ x 8′		564238E	1	1	1	1	1		1			
93	WIRE STAPLES, galvanized		583200E	*	*	*	*	*		*			
94	GROUND WIRE MOULDING, 8′		582060E	*	*	*	*	*		*			
95	CABLE GRIP		763555	3	3	3	3	3					3
96	J BOLT ASSEMBLY		720630	1	1	1	1	1					1
97	SCREW, lag, fetter, 1/2″ x 4″		785261E	16	16	16	16	16	1			6	9
98	TAG HOLDER		581799	1	1	1	1	1				1	
99	NAIL, large head		782483	2	2	2	2	2				2	
100	LABEL		non-stock	1	1	1	1	1				1	
101	NUMBER BOARD		shop made	1	1	1	1	1			1		

*crew has choice of quantity, exempt items only

6. Materials, continued

6.2 Material List

Item	Component Description	Stock No.	1/0	350	500	750	1000	AT	GND	NB	SW	UG
102	FLAT WASHER, bronze, 1/4″	788022E	2	2	2	2	2			2		
103	HEX NUT, bronze, 1/4″	783321E	2	2	2	2	2			2		
102	FLAT WASHER, bronze, 1/4″	788022E	2	2	2	2	2			2		
103	HEX NUT, bronze, 1/4″	783321E	2	2	2	2	2			2		
104	CAP SCREW, bronze, 1/4″	784505E	2	2	2	2	2			2		
105	LOCK WASHER, bronze, 1/4″	788121E	2	2	2	2	2			2		
106	LAG SCREW, 1/4″ x 4″	785216E	2	2	2	2	2			2		
107	FLAT WASHER, galvanized, 3/8″ x 1″	585020E	2	2	2	2	2			2		
108	BRACKET, number board mounting	563225	2	2	2	2	2			2		

7. References

0072.01; “Wildlife Protection, Small Birds and Animals”; Construction Standard; SCL

1299/C62.22.1-1996; *IEEE Guide for the Connection of Surge Arresters to Protect Insulated, Shielded Electric Power Cable Systems;* IEEE

D8-10; “Typical Number Board Installation”; Construction Guideline; SCL

D8-18; “Switch, 600 Amp - 3 Pole - Gang Operated for Wood Pole Mounting Vertical”; Construction Guideline; SCL

D14-1; “Ampact Tap Chart”; Construction Guideline; SCL

D16-2; “Grounding Rod Installation”; Construction Guideline; SCL

Detter, Chris; SCL Engineer, subject matter expert (Chris.Detter@seattle.gov)

DU5-15.6 (canceled); “Pole Termination, 3 Phase, 15/26 kV Distribution – 350, 500, 750 and 1000 kcmil, 27 kV Shielded Cable”; Construction Guideline; SCL

DU5-15.61 (canceled); “Pole Termination, 3 Phase, 15/26 kV Distribution, 350, 500, 750 and 1000 kcmil, 27 kV Shielded Cable, High Fault Current Areas”; Construction Guideline; SCL

Lu, Curtis; SCL Standards Engineer, subject matter expert and originator of Construction Standard 0173.20 (curtis.lu@seattle.gov)

Mimier, Dennis; SCL Crew Supervisor, subject matter expert (Dennis.Mimier@seattle.gov)

U7-10; “Conduit Risers on Poles”; Construction Guideline; SCL

U7-10.2; “Primary Conduit Riser Pole Base Detail”; Construction Guideline; SCL

U7-10.9; “Grounding Conduit Risers on Poles”; Construction Guideline; SCL

SECONDARY HANDHOLE GROUNDING (17″ X 28″)

1. Scope

This construction standard covers the grounding requirements for a single 17-inch by 28-inch secondary handhole located between the service transformer and a customer. This standard does not cover streetlight handholes.

2. Application

This document provides direction to SCL crews and contractors about how to install proper grounding for a SCL secondary service handhole. The goal is to assure handhole grounding is uniformly and properly installed by SCL crews and contractors. The required grounding includes grounding handhole lids constructed of conductive material.

The handholes in this Standard are all rated for H-20 loading.

3. Definitions

Heavy Traffic: constant vehicular loading (i.e. roadway)

Medium Traffic: occasional vehicular loading (i.e. driveway)

Light Traffic: rare vehicular loading (i.e. sidewalk)

4. Grounding Handhole Lid and Frame Installations

Figures 4a and 4b provide detail on how the secondary handhole grounding should be connected.

Figure 4a, Schematic, handhole wiring

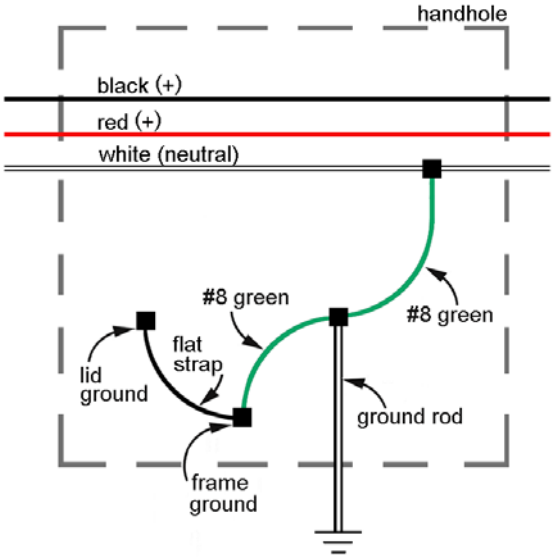

Figure 4b, Elevation, handhole wiring

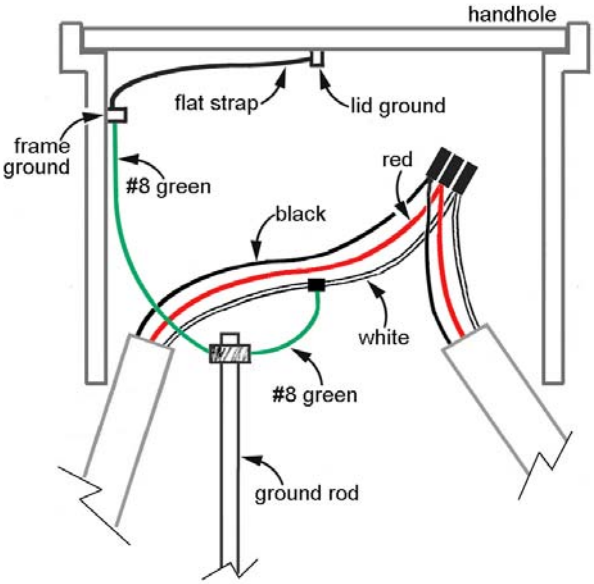

standards coordinator	standards supervisor	unit director
Curtis Lu	John Shipek	Darnell Cola

5. New Handhole Lid and Frame Installations

5.1 Choose appropriate method based on traffic load:

Traffic Load	Method
heavy	**A**
medium	**A** or **B**
light	**B**

5.2 Method A, heavy or medium traffic

Use precast handhole (Stock No. 720391) with lid that has factory installed ground strap.

Connect factory ground strap from lid to frame:

1. Install ground rod (Stock No. 564238E)
2. Install green #8 THWN ground wire (Stock No. 612277) from frame using factory bolt and set screw lug (Stock No. 012564E) to ground rod using a ground rod clamp (Stock No. 564012E).
   - Fog-Tite – manufacturer frame ground bolt is on the center of the long side wall below lip – see Figure 5
   - Christy/Old Castle – frame ground bracket is on the short side wall – see Figure 5
3. Bond neutral to ground using split bolt connector (Stock No. 668861E), green #8 THWN ground wire (Stock No. 612277) and ground rod clamp (Stock No. 564012E).

Figure 5, Frame ground location

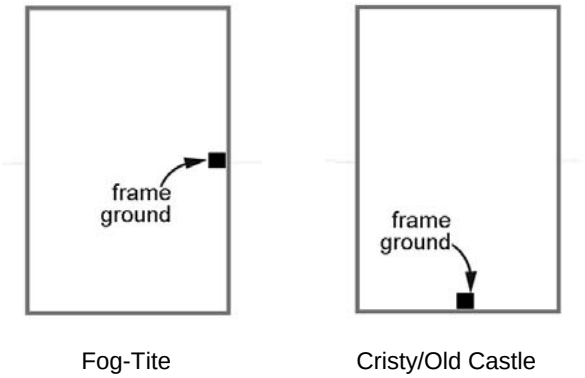

5.3 Method B, Light or Medium Traffic

Use composite fiberglass, reinforced plastic, polymer mortar/concrete handholes (Stock No. 720393) and lid (Stock No. 720397). This handhole and lid do not require grounding.

6. Existing Handhole Installations

6.1 Remove and replace

Whenever possible: remove the existing handhole and replace with a new up-to-date handhole. See section 5.

6.2 Grounding retrofit of existing handholes *with* factory frame ground

Where the removal of the old handhole and the installation of a new one is not possible it is necessary to retrofit the existing handhole to add grounding.

Determine if the existing handhole has access to the factory frame ground. For handholes with factory frame ground, follow directions in section 5.2 on new handhole installation for grounding. If any components of the grounding system are missing (factory installed ground strap, etc.) or inadequate refer to section 6.3, below.

6.3 Grounding retrofit of existing handholes *without* factory frame ground

For handholes without access to frame ground:

1. Install frame ground (performed by appropriate personnel)
2. Install ground rod (Stock No. 564238E)
3. Replace lid with new lid that has factory ground strap installed (Stock No. 012660)
4. Connect ground strap from lid to ground rod using a ground rod clamp (Stock No. 564012E)
5. Bond neutral to ground using split bolt connector (Stock No. 668861E), green #8 THWN ground wire (Stock No. 612277) and ground rod clamp (Stock No. 564012E).

7. References

7203.10; “Handhole, 17 X 28 Precast, Secondary;” SCL Material Standard

Barnett, John; SCL Engineer, subject matter expert (john.barnett@seattle.gov)

Lu, Curtis; SCL Standards Engineer, subject matter expert and originator of Construction Standard 0233.05 (curtis.lu@seattle.gov)

NEC 2008 Handbook, Article 250; "Grounding and Bonding"; 11th Edition; NFPA; 2008

NESC 2007 Edition, Section 9; “Grounding Methods for Electric Supply and Communications Facilities”; IEEE, 2006

Smalley, Edward; SCL Engineer, subject matter expert (edward.smalley@seattle.gov)

HEAT SHRINK SPLICES, STRAIGHT, 110 KV BIL, TYCO

1. Scope

This Construction Standard identifies the material required to install a Tyco, 110 kV BIL, straight, heat shrink splice on extruded dielectric cable. Cable splices are also known as cable joints.

The material list includes all the parts necessary to complete an installation. The material list has been organized to be cable specific.

The material needed to trifurcate 3/C type cable and seal the exposed tape shield from the trifurcation point to the heat shrink splice is outside the scope of this Standard.

Paper-insulated-lead-covered (PILC) cable, sector cable, and connecting more than two cables are outside the scope of this Standard.

For cable technical data, refer to E6-1.0/NGE-70.

For general cable preparation procedures, refer to U5-2.81/NSP-290.

For cutback lengths and splice installation procedures, refer to the specific instructions that were provided with the item.

2. Application

Heat shrink splices are used to permanently join two like-sized conductors, TRXLPE or EPR insulated, tape or flat strap shielded, medium voltage cable ends.

Heat shrink splices provide electric stress control for the cable insulation, external insulation between the cable conductor and ground, and a seal against the entrance of the external environment. Product may be installed indoors or outdoors on cable systems rated 15 kV.

The current and temperature rating of a properly installed heat shrink splice is equal to or greater than that of the cable for which it is designed.

This guideline may be used by engineers to create bills of material or by field crews when performing actual installations.

The industry-popular Raychem Corporation was purchased by Tyco Electronics in 1999; in some circles, heat shrink splices are still referred to as Raychems.

standards coordinator	*standards manager*	*unit director*
John Shipek	John Shipek	Pamela S. Johnson

3. Cable Splice Technical Description

Maximum voltage rating (ph-ph)	15 kV rms
common names	cable joint
	cable splice
	Raychems
	splice
SCL Material Standard	6873.11
technology	heat shrink
manufacturer	Tyco Electronics Energy Division
basic impulse insulation level, BIL	110 kV crest
continuous current rating	dependent on the type of cable and ambient conditions

4. Parts Identification

The following figures are provided for general information.

Figure 4.1, Heat Shrink Splice Kit for 750-1000 kcmil cable
Stock Number: 013057

Figure 4.2, **Compression Connector**, tapered
Stock Number: 677349

5. Material List

For a specific cable, use the heat shrink splice kit and compression connector indicated in Table 5.

Table 5, Material List

Stock Number	Rated Circuit Voltage, kV	Type	Size, AWG/ kcmil	Shape	Shield Type	required Splice Kit Stock Number	required Compression Connector Stock Number
1	2	3	4	5	6	7	8
613212	**5**	1/C	**#6**	compressed	tape	na	na
613222	**5**	1/C	**350**	compressed	tape	na	na
601025	**5**	1/C	**500**	class B	DW	na	na
613522	**15**	3/C	**#1**	compressed	tape	013055	677358
613523	**15**	3/C	**#1**	compressed	tape	013055	677358
613520	**15**	3/C	**2/0**	compressed	tape	013055	677360
613521	**15**	3/C	**3/0**	compressed	tape	013055	677361
613526	**15**	3/C	**3/0**	compressed	tape	013055	677361
613530	**15**	3/C	**350**	compact	tape	013056	677362
613531	**15**	3/C	**500**	sector	tape	na	na
010128	**15**	3/C	**500**	compact	tape	013056	677367
613532	**15**	3/C	**500**	compact	tape	013056	677367
623640	**15**	1/C	**500**	compact	tape	013056	677367
012735	**15**	3-1/C	**500**	compressed	FS	013056	677367
613533	**15**	3/C	**750**	sector	tape	na	na
613534	**15**	3/C	**750**	compact	tape	013057	677371
623670	**15**	3-1/C	**1000**	compressed	FS	013057	677351
623650	**27**	3-1/C+2N	**#8**	compressed	tape	na	na
602027	**28**	1/C	**#1**	class B	RW/CN	na	na
613540	**28**	3/C+3G	**#1**	compressed	Tape	na	na
602025	**28**	1/C+1N	**1/0**	solid	RW/CN	na	na
012098	**28**	1/C+1N	**1/0**	solid	RW/CN	na	na
602044	**28**	1/C	**350**	class B	RW/CN	na	na
012099	**28**	1/C	**350**	compact	FS	na	na
613613	**28**	1/C	**350**	compact	DW	na	na
613543	**28**	3/C+3G	**350**	compact	tape	na	na
012100	**28**	1/C	**500**	compact	FS	na	na
613615	**28**	1/C	**500**	compact	DW	na	na
613645	**28**	1/C	**500**	compressed	FS	na	na
602119	**28**	1/C	**750**	compact	DW	na	na
613618	**28**	1/C	**750**	compact	DW	na	na
974050	**28**	3/C	**750**	sector	tape	na	na
012101	**28**	1/C	**750**	compact	FS	na	na
012102	**28**	1/C	**1000**	compact	FS	na	na
613619	**28**	1/C	**1000**	compact	DW	na	na
613655	**28**	1/C	**1000**	compressed	FS	na	na
none	**35**	1/C	**350**	compressed	tape	na	na
623660	**35**	1/C	**750**	compact	DW	na	na
623655	**35**	1/C	**1000**	compact	tape	na	na

na = not a stock item or not available from any source

6. Tools

Tyco recommends installing splices with a "clean burning" torch, i.e. a propane torch that does not deposit conductive contaminants on the product.

Information relating to tool type, die number, and number of crimps is provided with the connector.

7. References

6871.3; "Splices, 15 kV through 69 kV BIL;" Material Standard; SCL

6873.11; "Heat Shrink Splices, Straight**,** 110 kV BIL, Tyco;" Material Standard; SCL

E6-1.0/NGE-70; "Properties of Medium Voltage Cables," Construction Standard; SCL

PII 56074; Tyco Electronics Energy Division, HVS-C-1530S-SCL, 15 kV Class, Splice for Extruded Dielectric (Poly/EPR) Power Cable with Flat Strap Neutral (FS) or Tape Shield, Installation Instructions, Revision AB, March 15, 2010

Shipek, John; SCL Standards Engineer, subject matter expert and originator of 0535.11 (shipek.john@seattle.gov)

U5-2.81/NSP-290; "Primary Cable Preparation, General" Construction Standard; SCL

TRANSFORMER PAD, INSTALLATION AND GROUNDING, 1Ø, 25 - 167 KVA

1. Scope

This construction standard provides the requirements for the installation of transformer pads for 25 through 167 KVA single phase padmount transformers. The document includes civil construction and grounding work.

2. Application

This document provides direction to SCL contractors and customers about how to properly install a transformer pad and its grounding for SCL pad mount transformers.

3. Construction Notes

3.1. Four-inch diameter steel pipe barrier posts or eight-inch curbs are required as specified. The barrier shall be a minimum of four feet from the front edge of the transformer to allow door swing. Barriers on the other three sides of the transformer shall be a minimum of three feet from the transformer to allow for adequate passage.

3.2 Conduits shall not extend above the surface of the pad.

3.3 Elbows shall be either rigid galvanized steel or PVC encased in four inches of concrete.

3.4 All metallic conduits shall have a grounding bushing or a bushing plus a ground clamp.

3.5 Ground bus must form a complete rectangle as shown in Figure 1.

3.6 If grounding is under concrete or asphalt, all connections shall be done by exothermic welding (CADWELD or equivalent).

3.7 Three-inch high capital letters, “SCL,” shall be cast in the concrete pad surface, facing the outside, centered between the long side of the conduit opening and the nearest outside edge of the pad.

4. Material List

Item	Quantity	Description		Stock No.
1	1	TRANSFORMER PAD	56″ x 48″, Utility Vault 54-1422	none
2	40 ft	WIRE	#2 Bare, 7 strand, soft drawn copper	610434
3	1	CONNECTOR	2 Bolt parallel tap	669379E
4	4	CONNECTOR	5/8″ – #2 Ground rod clamp	564012E
5	4	GROUND ROD	5/8″	564238E

5. References

Lu, Curtis; SCL Standards Engineer, subject matter expert and originator (Curtis.Lu@seattle.gov)

U10-1.5 (canceled); “Transformer Pad Construction and Grounding, 150 through 300 kVA, 3Ø;” Construction Guideline; SCL

standards coordinator	*standards manager*	*unit director*
Curtis Lu	John Shipek	Pamela S. Johnson

Figure 1

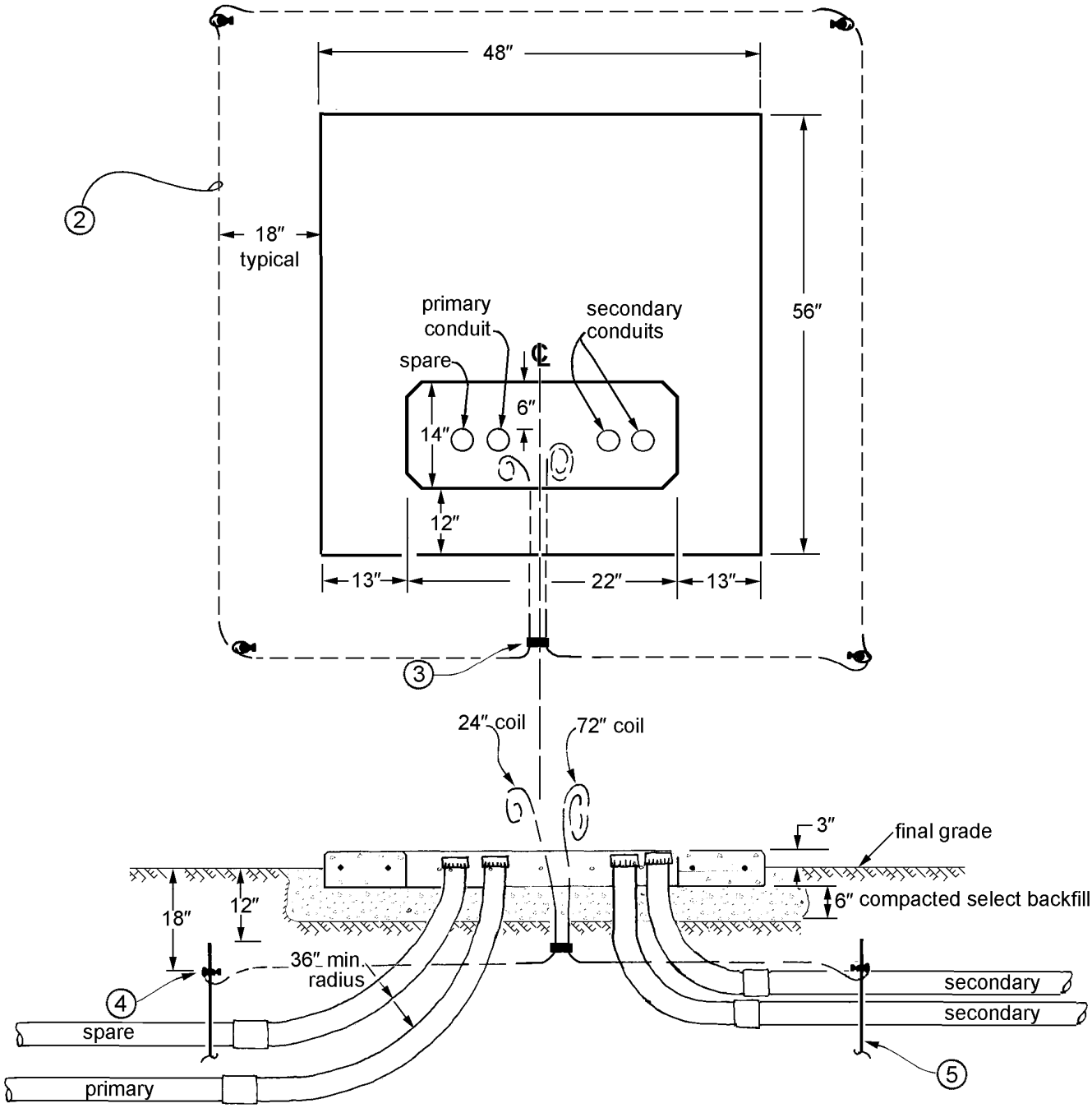
48″
56″
2
18″
typical
primary
conduit
secondary
conduits
spare
℄
6″
14″
12″
13″
22″
13″
3
24″ coil
72″ coil
3″
final grade
6″ compacted select backfill
18″
12″
36″ min.
radius
4
spare
primary
secondary
secondary
5

TRANSFORMER PAD, INSTALLATION AND GROUNDING, 3Ø, 75 - 300 KVA

1. Scope

This construction standard provides the requirements for the installation of transformer pads for 75 through 300 kVA three-phase padmount transformers. The document includes civil construction and grounding work.

2. Application

This document provides direction to SCL contractors and customers about how to properly install a transformer pad and its grounding for SCL pad mount transformers.

3. Construction Notes

3.1. Four-inch diameter steel pipe barrier posts or eight-inch curbs are required as specified. The barrier shall be a minimum of four feet from the front edge of the transformer to allow door swing. Barriers on the other three sides of the transformer shall be a minimum of three feet from the transformer to allow for adequate passage.

3.2 Conduits shall not extend above the surface of the pad.

3.3 Elbows shall be either rigid galvanized steel or PVC encased in four inches of concrete.

3.4 All metallic conduits shall have a grounding bushing or a bushing plus a ground clamp.

3.5 Ground bus must form a complete rectangle as shown in Figure 1.

3.6 If grounding is under concrete or asphalt, all connections shall be done by exothermic welding (CADWELD or better).

3.7 Three-inch high capital letters, “SCL,” shall be cast in the concrete pad surface, facing the outside, centered between the long side of the conduit opening and the nearest outside edge of the pad.

4. Material List

Item	Quantity	Description		Stock No.
1	1	TRANSFORMER PAD	84″ x 84″, Utility Vault 77-1660	none
2	55 ft	WIRE	#2 Bare, 7 strand, soft drawn copper	610434
3	1	CONNECTOR	2 Bolt parallel tap	669379E
4	4	CONNECTOR	5/8″ – #2 Ground rod clamp	564012E
5	4	GROUND ROD	5/8″	564238E

5. References

Lu, Curtis; SCL Standards Engineer, subject matter expert and originator (Curtis.Lu@seattle.gov)

U10-1.5 (canceled); “Transformer Pad Construction and Grounding, 150 through 300 kVA, 3Ø;” Construction Guideline; SCL

standards coordinator	*standards manager*	*unit director*
Curtis Lu	John Shipek	Pamela S. Johnson

Figure 1

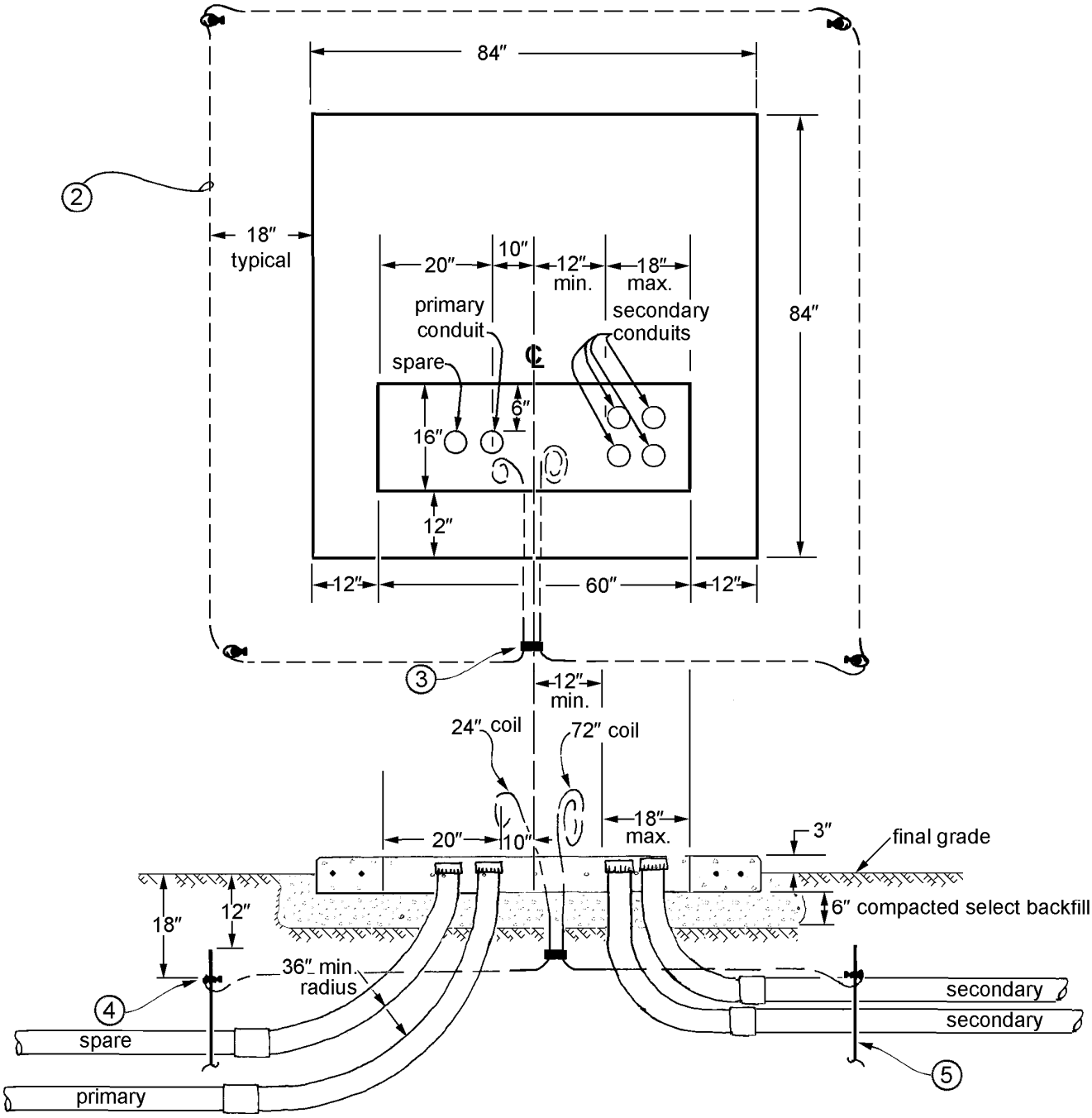
84″
2
18″
typical
20″
10″
12″
min.
18″
max.
primary
conduit
secondary
conduits
84″
spare
6″
16″
12″
12″
60″
12″
3
12″
min.
24″ coil
72″ coil
20″
10″
18″
max.
3″
final grade
6″ compacted select backfill
18″
12″
36″ min.
radius
4
secondary
secondary
spare
primary
5

TRANSFORMER PAD, INSTALLATION AND GROUNDING, 3Ø, 500 - 1500 KVA

1. Scope

This construction standard provides the requirements for the installation of transformer pads for 500 through 1500 kVA three-phase padmount transformers. The document includes civil construction and grounding work.

2. Application

This document provides direction to SCL contractors and customers about how to properly install a transformer pad and its grounding for SCL pad mount transformers.

3. Construction Notes

3.1. Four-inch diameter steel pipe barrier posts or eight-inch curbs are required as specified. The barrier shall be a minimum of four feet from the front edge of the transformer to allow door swing. Barriers on the other three sides of the transformer shall be a minimum of three feet from the transformer to allow for adequate passage.

3.2 Conduits shall not extend above the surface of the pad.

3.3 Elbows shall be either rigid galvanized steel or PVC encased in four inches of concrete.

3.4 All metallic conduits shall have a grounding bushing or a bushing plus a ground clamp.

3.5 Ground bus must form a complete rectangle as shown in Figure 1.

3.6 If grounding is under concrete or asphalt, all connections shall be done by exothermic welding (CADWELD or better).

3.7 Three-inch high capital letters, “SCL,” shall be cast in the concrete pad surface, facing the outside, centered between the long side of the conduit opening and the nearest outside edge of the pad.

4. Material List

Item	Quantity	Description		Stock No.
1	1	TRANSFORMER PAD	93″ x 96″, Utility Vault 88-1660	none
2	60 ft	WIRE	2/0 Bare, 7 strand, soft drawn copper	610425
3	1	CONNECTOR	2 Bolt parallel tap	669379E
4	4	CONNECTOR	5/8″ – 2/0 Ground rod clamp	676254
5	4	GROUND ROD	5/8″	564238E

5. References

Lu, Curtis; SCL Standards Engineer, subject matter expert and originator (Curtis.Lu@seattle.gov)

U10-1.6 (canceled); “Transformer Pad Construction and Grounding, 500 through 1000 kVA, 3Ø;” Construction Guideline; SCL

standards coordinator	*standards manager*	*unit director*
Curtis Lu	John Shipek	Pamela S. Johnson

Figure 1

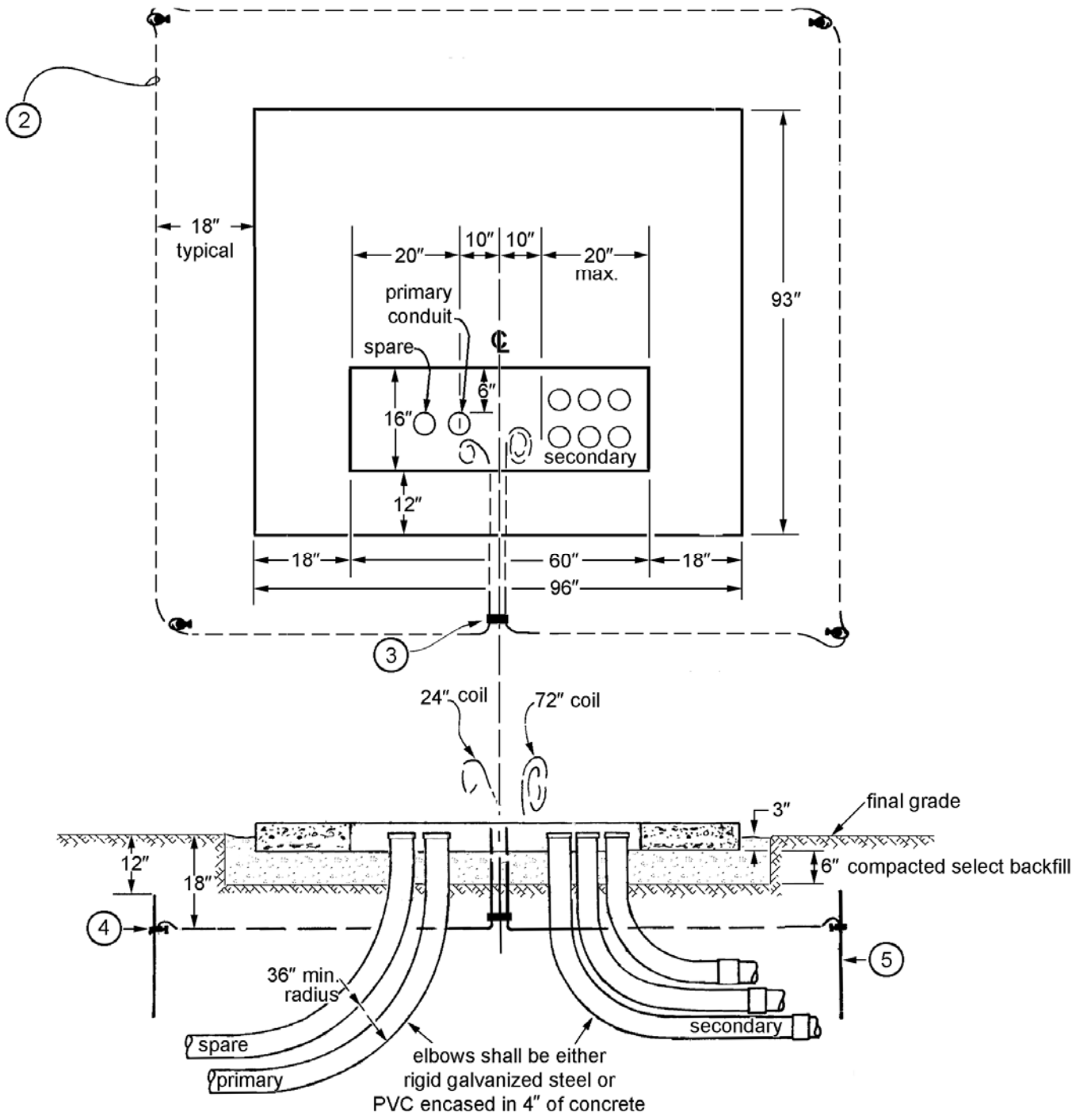
2
18″
typical
20″
10″
10″
20″
max.
93″
primary
conduit
spare
℄
6″
16″
secondary
12″
18″
60″
18″
96″
3
24″ coil
72″ coil
3″
final grade
12″
18″
6″ compacted select backfill
4
5
36″ min.
radius
secondary
spare
primary
elbows shall be either
rigid galvanized steel or
PVC encased in 4″ of concrete

TRANSFORMER PAD, INSTALLATION AND GROUNDING, 3Ø, 2000 - 2500 KVA

1. Scope

This construction standard provides the requirements for the installation of transformer pads for 2000 through 2500 kVA three-phase padmount transformers. The document includes civil construction and grounding work.

2. Application

This document provides direction to SCL contractors and customers about how to properly install a transformer pad and its grounding for SCL pad mount transformers.

3. Construction Notes

3.1. Four-inch diameter steel pipe barrier posts or eight-inch curbs are required as specified. The barrier shall be a minimum of four feet from the front edge of the transformer to allow door swing. Barriers on the other three sides of the transformer shall be a minimum of three feet from the transformer to allow for adequate passage.

3.2 Conduits shall not extend above the surface of the pad.

3.3 Elbows shall be either rigid galvanized steel or PVC encased in four inches of concrete.

3.4 All metallic conduits shall have a grounding bushing or a bushing plus a ground clamp.

3.5 Ground bus must form a complete rectangle as shown in Figure 1.

3.6 If grounding is under concrete or asphalt, all connections shall be done by exothermic welding (CADWELD or better).

3.7 Three-inch high capital letters, “SCL,” shall be cast in the concrete pad surface, facing the outside, centered between the long side of the conduit opening and the nearest outside edge of the pad.

4. Material List

Item	Quantity	Description		Stock No.
1	1	TRANSFORMER PAD	120″ x 96″, Utility Vault 77-2460	none
2	65 ft	WIRE	2/0 Bare, 7 strand, soft drawn copper	610425
3	1	CONNECTOR	2 Bolt parallel tap	669379E
4	4	CONNECTOR	5/8″ – 2/0 Ground rod clamp	676254
5	4	GROUND ROD	5/8″	564238E

5. References

Lu, Curtis; SCL Standards Engineer, subject matter expert and originator Curtis.Lu@seattle.gov)

U10-1.6 (canceled); “Transformer Pad Construction and Grounding, 500 through 1000 kVA, 3Ø;” Construction Guideline; SCL

standards coordinator	*standards manager*	*unit director*
Curtis Lu	John Shipek	Pamela S. Johnson

Figure 1

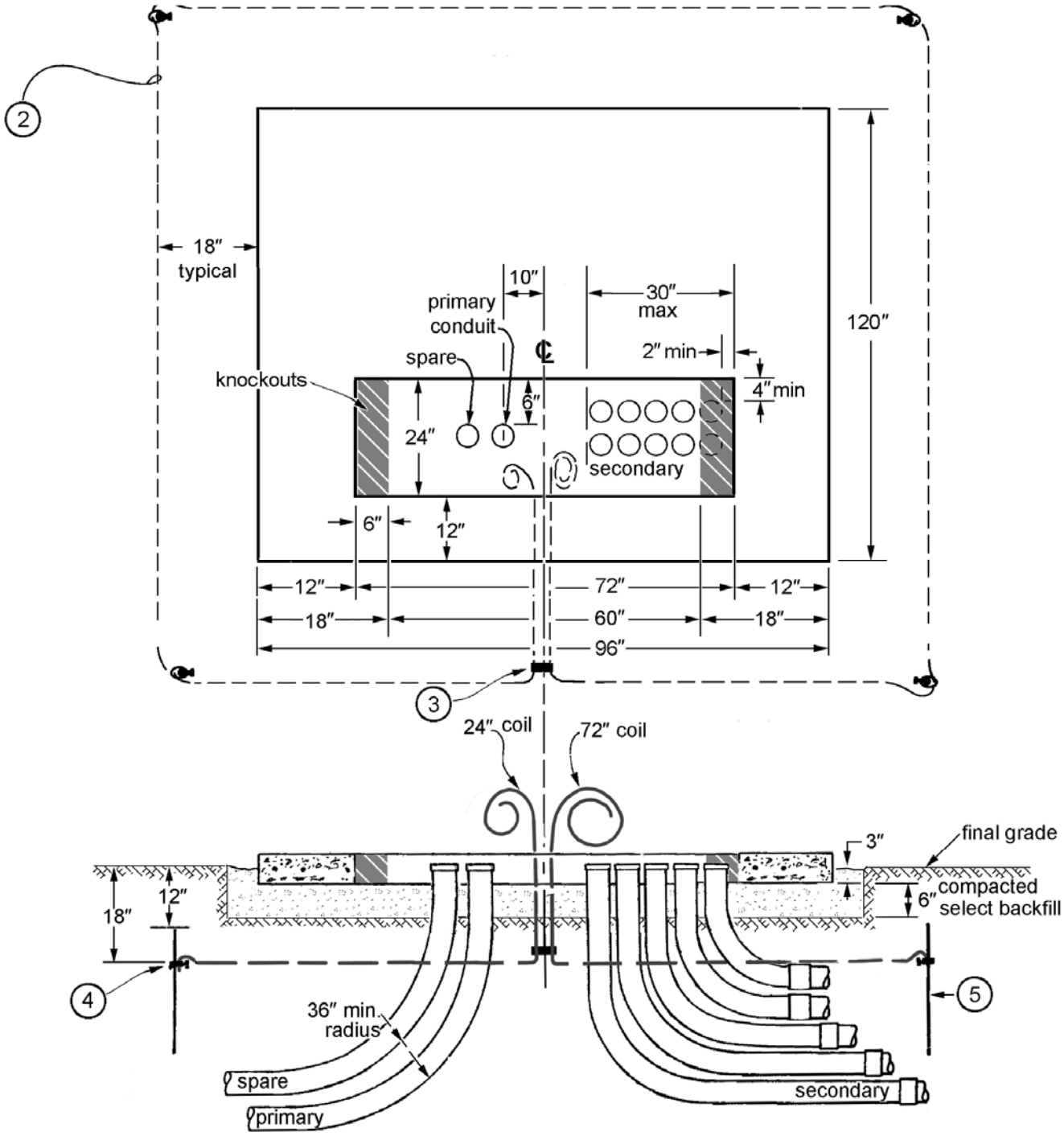
2
18″
typical
10″
30″
max
primary
conduit
spare
knockouts
2″ min
4″ min
6″
24″
secondary
120″
6″
12″
12″
72″
12″
18″
60″
18″
96″
3
24″ coil
72″ coil
3″
final grade
12″
18″
6″
compacted
select backfill
4
5
36″ min.
radius
spare
primary
secondary

PADMOUNT TRANSFORMER, INSTALLATION AND GROUNDING, 3Ø, 75-2500 KVA

1. Scope

This construction standard provides the requirements for the installation of three phase, 75-2500 kVA, padmount transformers and related grounding.

2. Application

This document provides direction to SCL contractors and customers about how to properly install and ground transformers for SCL padmount services.

3. Construction Notes

3.1. If conduits are steel, they shall be grounded using a cable to pipe ground clamp.

3.2 Taping of the transformer spades is not required.

3.3 If limiters are to be installed (see DU11-4), only two cable to flat (spade) limiters may be attached due to the diameter of the limiter.

3.4 Install Locks. Locks are available from the Tool Room. Use NAS 10 for URD and NW for Network.

3.5 If grounding is under concrete or asphalt, all connections shall be done by exothermic welding (CADWELD or equivalent).

4. Material List

Item	Quantity	Description		Stock No.
1	10 ft*	WIRE, bare Cu, stranded	#2 (75 – 500 kVA)	610434
			2/0 (750 – 2500 kVA)	610425
2	10 ft*	WIRE, bare Cu, stranded	#2	677326E
3	3	SPLICE, compression	#2	669379E
4	3	CONNECTOR, Crimpit	#2 to #2	677326E

* additional quantities may be required

standards coordinator	*standards manager*	*unit director*
Curtis Lu	John Shipek	Pam S. Johnson

4. Material List, continued

Item	Quantity	Description		Stock No.
5	2*	CONNECTOR, two bolt tap, parallel type	#2 stranded to 2/0 stranded	669379E
6	4*	TERMINAL, compression, Cu (lug)	#2	677071E
			2/0	677077E
			4/0	677081E
			350	677087E
			500	677091E
			750	677100
7	0*	CLAMP, Ground, cable to pipe	#4 solid to 2/0 stranded for 2” IPS	676283
			#4 solid to 2/0 stranded for 3” IPS	676285
			#4 solid to 2/0 stranded for 4” IPS	676286
8	3	DEADBREAK ELBOW KIT for 28 kV	1/0 AWG	686416

* additional quantities may be required

Figure 1, Padmount Transformer Connections

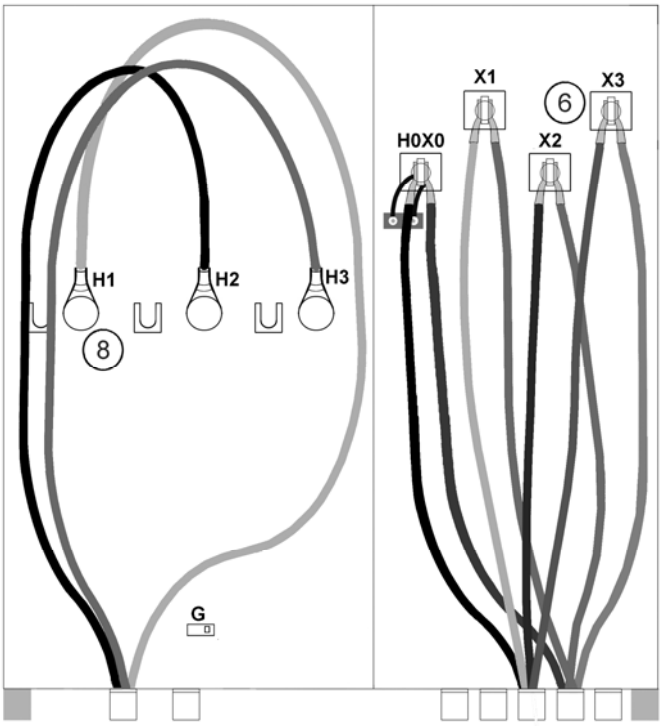

Figure 2, Padmount Transformer Grounding Connections

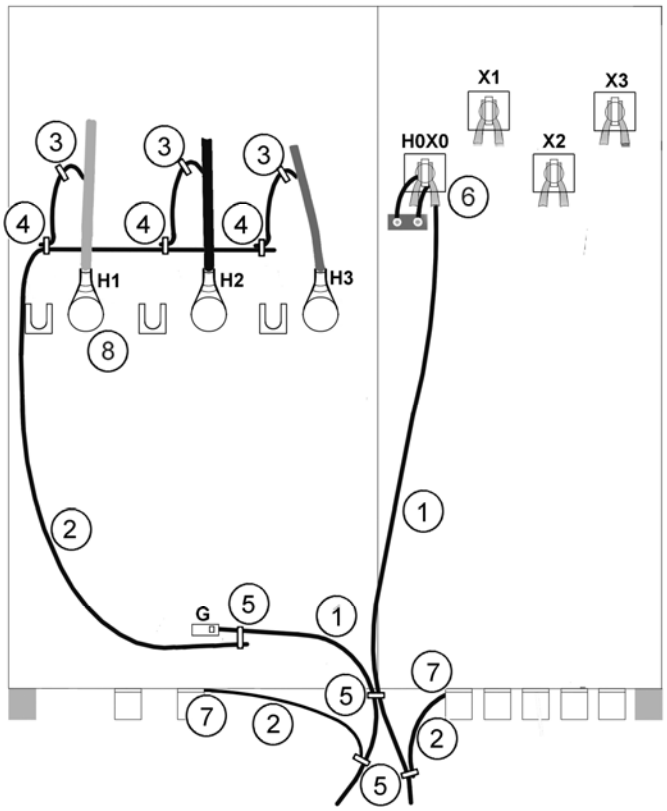

Figure 3, Padmount Transformer Grounding One Line

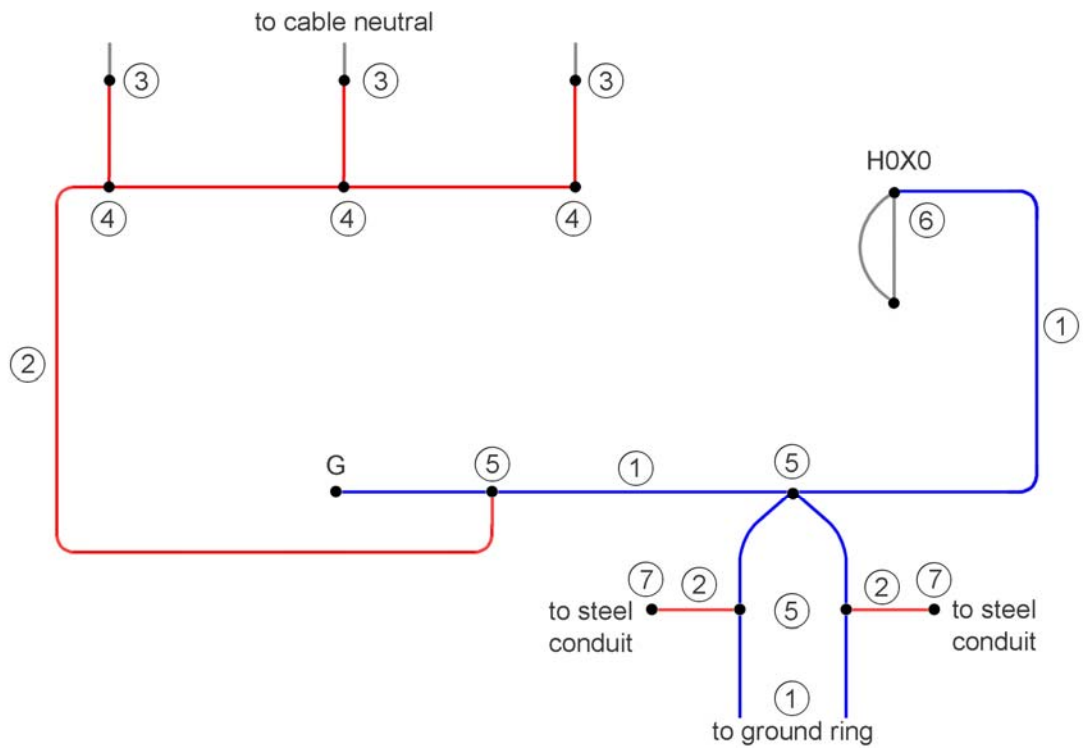

5. References

0652.03; "Transformer Pad, Installation and Grounding, 3Ø, 75 - 300 kVA;" Construction Standard; SCL

0652.05; "Transformer Pad, Installation and Grounding, 3Ø, 500 - 1500 kVA;" Construction Standard; SCL

0652.07; "Transformer Pad, Installation and Grounding, 3Ø, 2000 - 2500 kVA;" Construction Standard; SCL

9242.42; "Transformer Secondary Connection, Direct or with Tap Box;" Design Standard; SCL

DU11-4; "Cable Limiters – Distribution;" Construction Guideline; SCL

Lu, Curtis; SCL Standards Engineer, subject matter expert and originator of 0661.03 (Curtis.Lu@seattle .gov)

CUSTOMER REQUIREMENTS, IN-BUILDING TRANSFORMER VAULTS, NETWORK AND LOOPED RADIAL SYSTEMS

1. Table of Contents

Section		Page
1.	Table of Contents	1
2.	Scope	1
3.	Application	2
4.	Conflict	2
5.	Accessibility	2
6.	Location	2
7.	Construction (Walls, Roof, and Floors)	2
8.	Doorways and Openings	3
9.	Ventilation	4
10.	Drainage	5
11.	Pipes and Ducts	5
12.	Storage in Vaults	5
13.	Sprinkler System	5
14.	References	6

2. Scope

This Construction Standard covers select in-building vault requirements which are listed in the table of contents, in sections 4 through 13.

This Construction Standard provides the requirements for Seattle City Light (SCL) Network and Looped Radial (formerly URD) transformer, in-building vaults. These vault rooms contain SCL owned or maintained equipment.

An in-building transformer vault is a special room inside a building in which oil-filled transformers and related electric power distribution equipment are housed.

Concurrent Looped Radial vault requirements are listed in Construction Standard 0751.60. Topics include vault grounding, lighting, ducts, cables, bus ducts, etc. Construction Standard 0751.60 also lists required customer submittals and SCL provided project specific requirements.

Electrical vaults within buildings that contain equipment that is owned and maintained by others are not covered by this Construction Standard.

standards coordinator	*standards manager*	*unit director*
Uzma Siddiqi	John Shipek	Pam S. Johnson

3. Application

An in-building vault is required if the customer's electrical load exceeds the limits listed in *Requirements for Electrical Service Connection,* Table 5-1 and the customer cannot provide exterior space for the installation of SCL transformers and associated equipment on the project premises.

Vault requirements unique to either Network or Looped Radial (URD) systems are clearly indicated. All other requirements are applicable for both Network and Looped Radial systems.

This Construction Standard is intended for use by customers and SCL engineering, customer service, inspecting, reviewing, and operations personnel.

4. Conflict

Where conflict exists between SCL requirements, the following order of precedence shall apply:

a. Project specific Customer Requirements Package, including the Service Construction Letter and Drawing

b. SCL Construction Standard 0751.00

c. Seattle Building Code, 2006, Section 422 (within the City of Seattle)

d. SCL Construction Standard 0751.60

e. Other SCL Construction Guidelines or Construction Standards

f. SCL Requirements for Electric Service Connection, 2007

g. Other industry standards

5. Accessibility

5.1. Seattle City Light prefers that SCL trucks be able to access the door or hatch of the in-building vault.

5.2. In-building vaults shall be located no more than one floor below the building's exterior finished grade.

5.3. Network: One or more door(s) or ceiling hatch shall be provided for every in-building vault.

5.4. Looped Radial (formerly referred to as URD): One or more door(s) shall be provided for every in-building vault.

5.5. The opening shall be adequate in size to permit the installation and removal of the equipment located in the vault.

5.6. The door access shall be kept unobstructed at all times.

5.7. An unobstructed level area shall be provided at the entrance to the in-building vault.

5.8. The level area shall be large enough for moving SCL equipment into and out of the in-building vault.

5.9. All in-building vaults shall be readily accessible to SCL personnel at all times.

5.10. Looped Radial (URD): If it is necessary to pass through locked doors to reach the in-building vault, keys for those locked doors shall be kept in a readily accessible key box near the first locked door.

5.11. Network: If it is necessary to pass through locked doors to reach the in-building vault, keys for those locked doors shall be kept in a readily accessible key box near the first locked door. A spare set shall also be provided.

5.12. Non-SCL personnel shall not enter the in-building vault without SCL personnel after the vault has been accepted by SCL.

5.13. There shall be a clear equipment access path between the vault and the building exterior or right-of-way.

5.13.1. Sufficient horizontal and vertical clearance for electrical equipment and machinery to move the equipment.

5.13.2. The path floor shall be smooth, without seams or ridges or pads.

5.13.3. SCL shall move in the transformer(s) to the in building vault room if the path floor slope is 3% or less. If the path floor exceeds 3%, the customer is responsible to move in the transformer(s).

5.13.4. The path floor shall be designed to support the weight of the electrical equipment and machinery to move the equipment.

6. Location

6.1. In-building vaults shall be located such that they can be ventilated to the outside without using ducts, if practical.

6.2. In-building vaults shall be dry and not subject to running, standing, flooding, or infiltration of water.

6.3. Exact location of in-building vault shall be determined for each specific project.

7. Construction (Walls, Roofs, and Floors)

7.1. Floors, walls, and ceilings of in-building vaults shall have a minimum three hour fire resistance rating.

7. Construction, continued

7.2. All penetrations shall be sealed to be three-hour fire rated.

7.3. Network: The bottom 8 feet of wall, minimum, shall be solid concrete at least 6 inches thick. Above the solid concrete wall, it may be solid concrete or concrete filled masonry units at least 6 inches thick.

7.4. Network: Floors and ceilings of in-building vaults shall be constructed of solid concrete at least 6 inches thick.

7.5. Looped Radial (URD): Floors, walls, and ceilings of in-building vaults shall be constructed of solid concrete or concrete-filled masonry units at least 6 inches thick.

7.6. Seismic anchors shall be embedded in the floor.

7.7. Network: Steel support channels shall be embedded in the ceiling for ceiling supported cable hangers. Channel layout shall be determined for each specific project by SCL.

7.8. Looped Radial (URD): Steel support channels shall be embedded in the ceiling, if requested by SCL.

7.9. Pre-tensioned or post-tensioned concrete shall have the cable locations permanently marked on the surface of the concrete over the encased tendons.

7.10. In-building vault dimensions shall depend on the equipment and working clearances required.

7.11. Network: The maximum ceiling height is 18 feet.

7.12. Working space for all equipment 600V and under shall be 3 feet, minimum.

7.13. Network: Pulling iron(s) shall be installed opposite the primary cable duct bank entrance(s) on the wall or the ceiling. Exact pulling iron location shall be determined for each specific project by SCL.

7.14. Looped Radial (URD): Pulling iron(s) shall be installed opposite the primary cable duct bank entrance(s) on the wall or the ceiling, if required by SCL.

7.15. The vault floor shall be smooth, without seams or ridges or pads.

8. Doorways and Openings

8.1. Protection and Doorways (Type of Door)

8.1.1. Looped Radial (URD): SCL requires an equipment access door. The number of personnel access doors shall be determined for each specific project by SCL.

8.1.2. Network: SCL requires two doors for personnel egress; one of which may also be the equipment access door.

8.1.3. All in-building vault doors shall have three-hour fire resistance rating.

8.1.4. All in-building vault doors shall be Class A.

8.1.5. All in-building vault doors shall not have any vents or other types of openings.

8.1.6. All in-building vault doors shall swing out of the vault 180 degrees.

8.1.7. Doors that may be prevented from swinging 180 degrees by vehicles or mobile equipment shall be protected by bollards. Bollards shall preserve the door swing area and not obstruct the doorway.

8.1.8. Personnel access doorways shall be at least 3 feet wide and 6 feet 8 inches high.

8.1.9. Door hinge pins shall not be removable.

8.2. Locks

8.2.1. All in-building vault doors shall be equipped with locks and shall be kept locked.

8.2.2. All in-building vault doors shall be equipped with a cylinder capable of accepting the Best 7-pin Interchangeable Core provided by SCL.

8.2.3. Doors shall be equipped with panic bars, pressure plates, or other devices that are normally latched but open under simple pressure.

8.3. Sills

8.3.1. All in-building vault doorways shall have a removable, oil containment sill of 4 inches (min). Exact height of curb shall be determined for each specific project by SCL.

8.3.2. The sill shall be made of masonry or concrete and sealed.

8.3.3. Network: The sill shall be located under each door.

8.3.4. Looped Radial (URD): The sill shall be located under or behind each door.

8.3.5. The sill shall be installed after the installation of the electrical equipment.

8. Doorways and Openings, continued

8.4. Equipment Installation, Access, and Removal

8.4.1. Equipment access doorways shall be sized to accommodate the installation and removal of electrical equipment (including the installation machinery).

8.4.1.1. If vault contains single phase transformers only, the doorway shall be at least 3 feet 6 inches wide and 6 feet 8 inches high.

8.4.1.2. All other doorways shall be sized by SCL, as needed.

9. Ventilation

9.1. Ventilation systems shall be provided to dispose of heat from transformer total losses without creating a temperature rise that exceeds the transformer rating.

9.2. The owner is responsible for maintaining the vault ventilation system to ensure proper and continued operation.

9.3. Method of ventilation

9.3.1. Utility in-building vaults shall be mechanically ventilated.

9.3.2. Positive or negative pressure ventilation systems shall supply air for in-building vaults.

9.3.3. Ventilation system shall supply a min of 1.6 cfm of air per kVA of transformer capacity.

9.4. Location

9.4.1. Exhaust ventilation openings and duct terminations shall be located not less than 10 feet from fire escapes, required means of egress, combustible materials, unprotected openings and property lines.

9.4.2. Exhaust outlets shall be located on the exterior of the building.

9.5. Arrangement (of ventilation equipment)

9.5.1. Fans and thermostats

9.5.1.1. The in building vault ventilation fans shall be installed outside of the vault.

9.5.1.2. The in building vault ventilation fans shall be controlled by thermostats located inside the vault.

9.5.1.3. Remote temperature controller shall be installed.

9.5.1.4. A dedicated thermostat will activate the fans at 70 degrees F.

9.5.1.5. The second dedicated thermostat will turn off the fans at 140 degrees F.

9.5.1.6. Thermostats shall be analog (dial) type (SCL has accepted the Honeywell T631A-C type Farm-O-Stat, Model No T631A1022). Other analog thermostats shall be submitted to SCL for review.

9.5.1.7. Looped Radial (URD): If fans becomes inoperable or do not turn on at 70 degrees or if the vault temperature exceeds 140 degrees, activate a visible or audible alarm with sign outside vault. Sign shall state “If alarming, call Seattle City Light at 206-625-4448”.

9.5.1.8. Network: No visible or audible customer installed alarm required. SCL installs monitoring equipment.

9.5.1.9. The building owner is responsible for providing power and maintaining the vault ventilation system, including the fans.

9.5.1.10. Looped Radial (URD): The building owner may monitor vault fan alarm signal, but shall not control vault fan or alarm.

9.5.2. Vents

9.5.2.1. Intake air shall be drawn from the exterior, from a garage, or from an SCL transformer entrance well. It shall not be drawn from conditioned air in the building.

9.5.2.2. Intake vents shall be located at least 18 inches above the interior and exterior floors.

9.5.2.3. The intake vents shall be located in the lower one half of the exterior walls of the vault.

9.5.2.4. The exhaust vents shall be in the upper half of the wall or in the roof or ceiling of the vault.

9. Ventilation, continued

9.5.2. Vents, continued

9.5.2.5. Exhaust shall vent directly to the outside of the building or shall be ducted, using three-hour rated material.

9.5.2.6. Exhaust cannot vent to a covered parking area or garage.

9.5.3. The ventilation system shall cause air to flow across the cooling fins of the transformers

9.5.4. Ventilation system shall direct airflow diagonally across the vault.

9.5.5. The vault ventilation system shall be controlled independently of the building ventilation system.

9.5.6. No ducting shall be installed within the vault.

9.5.7. Vents shall not allow water to enter the vault.

9.5.8. Looped Radial (URD): Vents shall be 3 feet away from non-combustible surfaces and 10 feet away from combustible surfaces.

9.6. Covering

9.6.1. Ventilation openings shall be covered with durable metal gratings, screens, or louvers.

9.6.2. If operable louvers are provided, they shall be controlled by the fan thermostat (i.e. louvers open when fan is energized).

9.7. Dampers

9.7.1. Intake vents in the vault walls from the interior of the building shall have automatic closing fire dampers rated for 3 hr fire resistance.

9.7.2. Damper actuating device shall function at 140 degrees F.

9.8. Ducts

9.8.1. If used, exhaust ducts shall have a three-hour fire resistance rating.

9.8.2. Exhaust ducts shall extend from the vault to the outside of the building.

9.8.3. Exhaust ducts shall be used exclusively for vault ventilation.

9.8.4. No fire dampers shall be installed in exhaust ducts.

10. Drainage

10.1. Drains are prohibited in all in-building vaults.

10.2. Sumps

10.2.1. All in-building vaults shall have a dry sump.

10.2.2. Network: The sump shall have a minimum capacity of 8 cubic feet.

10.2.3. Looped Radial (URD): The sump shall have a minimum capacity of 2 cubic feet.

10.2.4. Network: Sumps shall have an opening with 6 inches minimum in both length and width and have a depth of at least 12 inches.

10.2.5. Looped Radial (URD): Sumps shall have an opening of at least 18 inches by 18 inches and have a depth of at least 12 inches.

10.2.6. Sumps shall be equipped with a removable galvanized steel grate that is flush with the floor.

10.2.7. Sumps shall have a grouted bottom.

10.2.8. At least one sump shall be located near the personnel door but not in the equipment access path or in front of the door.

10.2.9. The floor shall slope at least one inch in ten feet towards the sump.

11. Pipes and Ducts (Water Pipes and Accessories)

11.1. No pipes or foreign ducts shall pass or enter the in-building vault.

11.2. Electrical conduits terminating in the vault shall be sealed with a listed three-hour fire rated material.

12. Storage in Vaults

12.1. No material shall be stored in any in-building vault.

13. Sprinkler System

13.1. Sprinkler systems shall not be installed within an in-building vault.

13.2. In-building vaults shall be maintained in a dry condition.

14. References

0751.60; "Concurrent Customer Requirements for In-Building Transformer Vaults, 26.4 kV Looped Radial System;" Construction Standard; SCL

NFPA 70 - NEC; *National Electrical Code*; 2008

NFPA 80; *Standard for Fire Doors and Other Opening Protectives*; NFPA; 2007

Requirements for Electric Service Connection; Seattle City Light, 2007

SCL 2007-2008 In-Building Vault Subcommittee: Shayan Arya, Ed Chu, Toni Gamble, Laurie Hammack, Bob Hansen, Gerard Legall, Eivind Perander, Uzma Siddiqi, Quang Ta, and Roger Tapp.

Seattle Building Code; Section 422; 2006

U2-8 (canceled)**;** "In-Building Transformer Vaults (Non-Network Area)"; Construction Guideline; SCL

U10-2 (canceled)**;** "Transformer Service Vaults and Padmounts, Customer's Responsibility, Outside Network Area"; Construction Guideline; SCL

U10-2.1 (canceled)**;** "Transformer Service Vault, In-Building, Dry, Outside Network Area"; Construction Guideline; SCL

U10-2.2 (canceled)**;** "Transformer Service Vault In-Building, With Outdoor, Below Ground Access, Outside Network Area"; Construction Guideline; SCL

Siddiqi, Uzma; SCL Standards Engineer, subject matter expert, and originator of 0751.00 (uzma.siddiqi@seattle.gov)

CONCURRENT CUSTOMER REQUIREMENTS, IN-BUILDING TRANSFORMER VAULTS, LOOPED RADIAL SYSTEM

1. Table of Contents

Section		Page
1.	Table of Contents	1
2.	Scope	1
3.	Application	1
4.	Conflicts	1
5.	SCL Project Specific Requirements	1
6.	Other Agency Requirements	2
7.	Required Customer Submittals	2
8.	SCL Inspections	2
9.	Easements	2
10.	General Requirements	3
11.	Vault Grounding	3
12.	Vault Lighting	4
13.	Vault High Voltage (Primary) Entrance	4
14.	Customer's Service Connection	5
15.	Vault Document Enclosure	5
16.	Requirements of Other Utilities	5
17.	References	5

2. Scope

This construction standard covers requirements for in-building transformer vaults located in the looped radial system (URD). The topics addressed are listed in the Table of Contents above.

This standard shall be used in conjunction with Construction Standard 0751.00 which states and discusses other requirements, including: Accessibility, Location, Construction (Walls, Roof, and Floors), Doorways and Openings, Ventilation, Drainage, Pipes and Ducts, Storage in Vaults, and Sprinkler Systems.

This standard should *not* be used for in-building vaults:

- Located in any of the SCL Network areas
- Containing switchgear

3. Application

This standard lists the SCL requirements for in-building vaults. An in-building vault is required if the customer's electrical load exceeds the limits listed in *Requirements for Electrical Service Connection*, Table 5-1, and the customer cannot provide exterior space for the installation of SCL transformers and associated equipment of the project premises.

This construction standard is intended to be used by customers and SCL engineering, customer service, inspecting, reviewing, and operations personnel.

4. Conflict

Where conflict exists the following order of precedence shall apply:

a. Project specific Customer Requirements Package, including the Service Construction Letter and Drawing

b. SCL Construction Standard 0751.00

c. Seattle Building Code, 2006, Section 422 (within the city of Seattle)

d. SCL Construction Standard 0751.60

e. Other SCL Construction Standards and Guidelines

f. SCL Requirements for Electric Service Connection, 2007

g. Other industry standards

5. SCL Project Specific Requirements

When necessary, Seattle City Light Engineering will provide the following project specific requirements for in-building vaults:

5.1. Minimum vault dimensions, including the height of ceilings

5.2. Direction and location of ceiling channel

5.3. Location and number of vault pulling irons

5.4. Locations for transformer seismic anchors

5.5. Locations and number of ground rods

standards coordinator	standards manager	unit director
Uzma Siddiqi	John Shipek	Pam S. Johnson

5.1 SCL Project Specific Requirements, continued

5.6. Location, size and number of doors, including height of door sills

5.7. Required air flow for vault ventilation (in CFM)

5.8. Location and type of customer's service connection (Service Entrance)

5.9. Size, number, type, and routing of high voltage conduit from the SCL distribution system to the customer's in-building vault, including conduit on poles, conduit encasement, and trench backfill

6. Other Agency Requirements

6.1. Before a customer can be connected to the Seattle City Light electrical system, the building electrical system must pass electrical inspection by the authority having jurisdiction. (Refer to the agency issuing the electrical permit.)

6.2. Before a customer can be connected to the Seattle City Light electrical system within the City of Seattle, the in-building vault must pass vault inspection by the Department of Planning and Development inspector.

6.3. The customer is responsible for the in-building vault to satisfy applicable laws, ordinances, and requirements regarding sound and vibration levels. (Refer to the Washington Administrative Code, King County Ordinances, and city ordinances)

7. Required Customer Submittals

In addition to the submittals required in the SCL Application for Electric Service packet, the following submittals must also be received and approved by SCL before construction of the in-building vault room:

7.1. The customer's in-building ventilation system shall be designed by an qualified HVAC consultant

7.2. The customer shall submit drawings showing the design of the in-building vault ventilation system, including intake and exhaust, fans, louvers, dampers, thermostats, air flow direction, etc. Location of all devices and apparatus shall be shown on a plan drawing.

7.3. All topics addressed in the SCL project specific requirements section shall be shown on customer drawings of the in-building vault room

8. SCL Required Points of Inspection

Before a customer can be connected to the Seattle City Light electrical system, Seattle City Light personnel must inspect and approve:

8.1. Vault Construction per SCL Construction Requirements Package and SCL Construction Standards and Construction Guidelines.

8.2. Grounding

8.2.1. Grounding resistivity, generally, 25 ohms or less

8.2.2. Exothermic welds, if any, before they become inaccessible

8.3. Duct Bank Installation

8.3.1. Trench

8.3.2. Bedding

8.3.3. Backfill

8.4. Conduits

8.4.1. Cleaning and mandrelling

8.4.2. Pull Tape installation

9. Easements

9.1. Seattle City Light requires an easement if SCL equipment is needed to serve more than one parcel and that equipment is located on private property. In that case, an easement is required over the entire area in which the SCL distribution system will be located.

9.2. If required, a new easement must be secured or the customer shall provide proof of an existing easement to Seattle City Light, before the service will be connected.

9.3. The easement document is prepared separately from the project specific Customer Requirements Package.

10. General Requirements

Figure 1, Preferred layouts for in-building transformer vault room

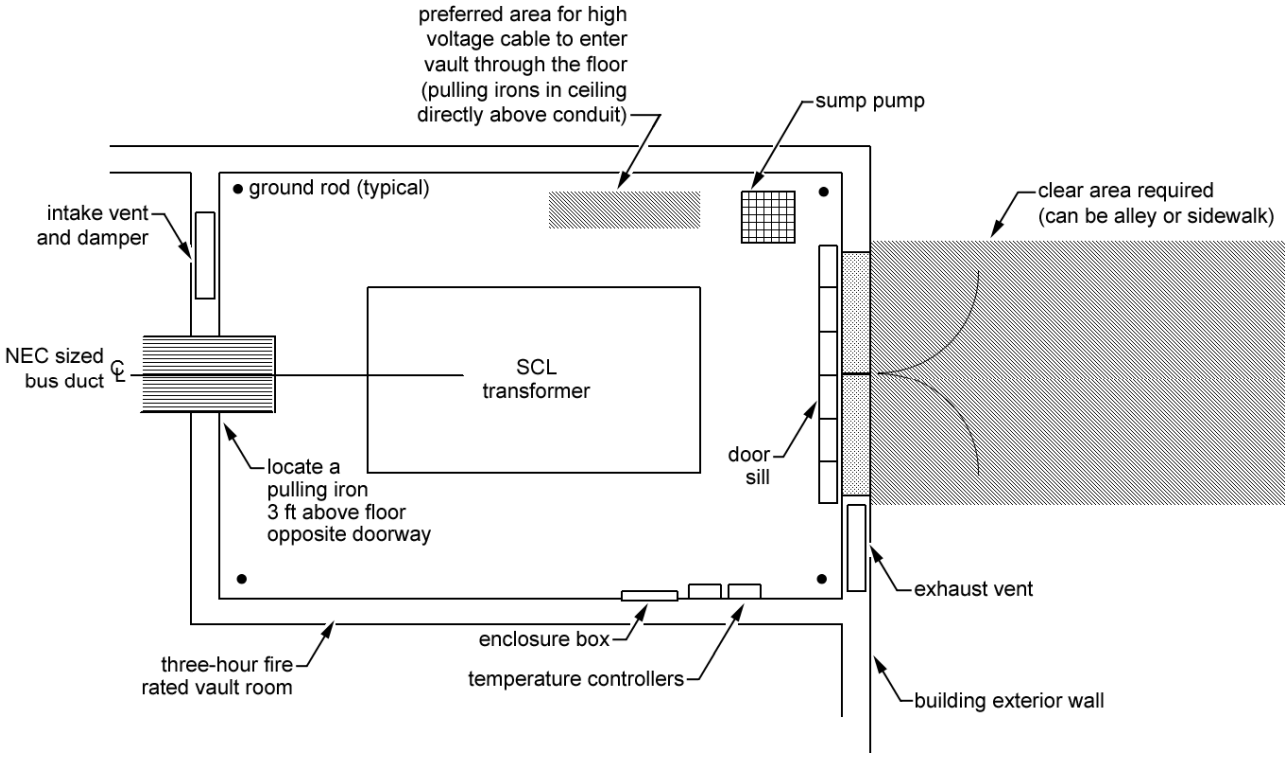

10.1. In-building vaults shall be dry spaces and no standing water shall accumulate in the vault. The customer shall take adequate measures to prevent water from entering the in-building vault via wall, floor, or ceiling penetrations or via seepage. It is the responsibility of the customer to maintain the vault as a dry space.

10.2. The vault is not to be used for any other purpose except for SCL electrical distribution equipment

10.3. The vault shall conform to the requirements of Figure 1

11. Vault Grounding

11.1. General Requirements

11.1.1. A driving head shall be used to prevent damage to the ground rod threads.

11.1.2. The space between the rods and the floor shall be caulked and grouted to prevent the entrance of water.

11.2. Vaults with Floor Contacting Soil

11.2.1. Grounding for the vault shall consist of four, 5/8 inch by 8-foot copper-clad steel ground rods, driven into compacted soil near the corners of the vault.

11.2.2. Each rod shall be placed 6 inches (plus/minus 0.5 inches) from the walls.

11.2.3. Rods shall extend 6 inches above the vault floor.

11.3. Vaults with floor not Contacting Soil

11.3.1. Grounding for the vault shall consist of four, 5/8 inch by 8 foot copper-clad ground rods, driven into compacted soil within 40 feet of the vault floor and within the customer's property. Exact location will be shown on project specific drawing.

11.3.2. Ground rods shall be spaced a minimum of 8 feet apart.

11. Vault Grounding, continued

11.3. Vaults with floor not Contacting Soil, continued

11.3.3. Install one 500 kcmil bare copper, soft drawn, concentric-stranded conductor, to each pair of the ground rods. These two 500 kcmil conductors shall extend 6 feet into the vault from opposite corners. Each conductor shall be attached to each pair of ground rods with an exothermic weld (Cadweld®).

11.3.4. The two grounding conductors shall be kept 8 feet apart from each other and from any other electrical ground cable

11.3.5. Outside the vault, the grounding conductors shall be protected by non-metallic electrical conduit when not in contact with concrete or soil.

12. Vault Lighting

12.1. The customer shall install vault lighting and receptacles per City Light Construction Guideline U10-6/NTP-60.

12.2. City Light will connect the power for the lights and receptacles.

13. Vault High Voltage (Primary) Entrance

13.1. General Requirements

13.1.1. Conduit shall be rigid galvanized steel or PVC (Schedule 40) or fiberglass.

13.1.2. For rigid galvanized steel and PVC, Schedule 40, all conduit bends shall be rigid galvanized steel.

13.1.3. A maximum of three 90-degree bends of 3-foot radius are allowed in the primary conduit run, including bends at the base of the pole.

13.1.4. Conduit encasement and trench backfill shall be specified in the project specific customer requirement package.

13.1.5. Conduit shall have a minimum 36 inch cover.

13.1.6. After conduit installation, the conduit shall be cleaned and mandrelled per Construction Guideline U2-11.40/ NDK-40.

13.1.7. Install a pulling hand-line and marking tape as per Construction Guideline U2-11.40/NDK-40.

13.2. Conduit in Right-of-Way and Easements

13.2.1. Install below grade conduit in Public Right-of-Way and Easements per Construction Guideline U2-10/NDK-50 and U2-11.

13.2.2. For conduit above grade on poles, provide and install conduits from the specified starting point to the power pole per Construction Guidelines U7-10/NDK-70 and U7-10.2/NDK-90. Exact location and conduit type shall be included in the project specific Customer Requirement Package.

13.3. Conduit on Private Property, including within the in-building vault

13.3.1. Install conduit on private property per Construction Guideline U12-1.4/ NDK-60.

13.3.2. Shall be encased within a minimum of 6 inches of concrete within building.

13.3.3. If surface of concrete encased conduit bank is visible within building it must be visibly marked with permanent “DANGER – High Voltage” signs over the concrete encased conduit bank’s entire path within building to vault. Signs installed once per room or every 10 feet.

13.3.4. High voltage or primary entrances into vaults are cables in conduits.

13.3.5. Fire seal the cable installed in conduit for a three-hour rating using rated grout or fire-barrier caulk in order to protect migration of fire, smoke, and gas.

13.3.6. Conduits entering the vault shall be supplied with closing plugs.

13.3.7. Conduit shall enter the vault perpendicular to the vault wall no more than 18 inches from the ceiling or the walls.

13.3.8. A minimum of 6 inches shall be allowed between the closest edge of the conduit and the ceiling, the floor or walls.

13.3.9. Conduits entering the vault shall be provided and installed with end bells and shall be grouted both inside and outside the vault per Construction Guideline U2-11/NDK-20.

13.3.10. Conduits entering the same vault corner but on adjacent walls shall be staggered and shall not enter on the same elevation.

13. Vault High Voltage, continued

13.4. Conduit on Private Property, continued

13.4.1. A minimum of 6 inches shall be allowed between the closest edge of the conduit and the ceiling or walls.

14. Customer's Service Connection (Service Entrance)

14.1. General Requirements

14.1.1. Seattle City Light prefers that the customer provide NEC-sized bus duct into the in-building vault. NEC-sized cables in conduit is also acceptable.

14.1.2. All service entrance penetrations shall be sealed, including bus duct, conduits, and cables.

14.1.3. Rotation of service bus bars or cables shall be clearly identified by the customer and in case of multiple services, it shall be consistent across all services

14.2. Service Entrance using Bus Duct

14.2.1. Provide and install NEC-sized secondary bus duct into the vault per Construction Guideline U11-9.1, page 1.

14.2.2. Brace and support the bus duct.

14.2.3. Label each bus bar for phasing

14.2.4. If multiple bus ducts, label each bus duct with service being fed

14.2.5. The bus duct is centered on the wall

14.3. Service Entrance using Cables in Conduit

14.3.1. Any conduit that extends beyond the face of the vault surface shall be rigid galvanized steel

14.3.2. Conduits entering the vault shall be supplied with closing plugs.

14.3.3. Conduit shall enter the vault perpendicular to the vault wall no more than 18 inches from a corner.

14.3.4. Conduits entering the vault shall be provided and installed with end bells and shall be grouted both inside and outside the vault per Construction Guideline U2-11/NDK-20.

14.3.5. Conduits entering the same vault corner but on adjacent walls shall be staggered and not enter on the same elevation.

14.3.6. If conduit is entering through the floor, it shall extend 18 inches above the floor

14.3.7. Label each cable to identify phasing

14.3.8. If multiple services, label each set of cables with the service being fed

14.3.9. Fire seal the cable installed in conduit for a three-hour rating using rated grout or fire-barrier caulk in order to protect migration of fire, smoke, and gas.

15. Vault Document Enclosure

15.1. Install a permanent, weatherproof clear document enclosure box on the vault wall near the light switch or the thermostats

15.2. The document enclosure shall be adequate for permanently storing 8-1/2 by 11 inch documents.

16. Requirements of Other Utilities

16.1. SCL Construction Standards and Guidelines do not cover the installation of telecommunications or any other utility's equipment serving a project.

16.2. City Light does not coordinate with other utilities for installations in the public right-of-way. However, City Light may install conduits and small pull boxes in the right-of-way for other utilities which are coincident to City Light construction. This information can be requested for specific projects individually if the customer obtains the current written specifications from the utility.

17. References

Hall, Alan; SCL Engineer, subject matter expert for 0751.60 (alan.hall@seattle.gov)

NFPA 70 - NEC; *National Electrical Code*; 2008

Requirements for Electric Service Connectio*n*; Seattle City Light, 2007

SCL 2007-2008 In-Building Vault Subcommittee: Shayan Arya, Ed Chu, Toni Gamble, Laurie Hammack, Bob Hansen, Gerard Legall, Eivind Perander, Uzma Siddiqi, Quang Ta, Roger Tapp

Siddiqi, Uzma; SCL Standards Engineer, subject matter expert, and originator of 0751.60 (uzma.siddiqi@seattle.gov)

U2-8 (canceled); "In-Building Transformer Vaults (Non-Network Area);" Construction Guidelines; SCL

17. References, continued

U10-2 (canceled)**;** "Transformer Service Vaults and Padmounts, Customer's Responsibility, Outside Network Area"; Construction Guidelines; SCL

U10-2.1 (canceled)**;** "Transformer Service Vault, In-Building, Dry, Outside Network Area"; Construction Guidelines; SCL

U10-2.2 (canceled)**;** "Transformer Service Vault In-Building, With Outdoor, Below Ground Access, Outside Network Area"; Construction Guidelines; SCL

PRIMARY METERING COMPARTMENT REQUIREMENTS, 27 kV

figure 1

1. Scope

This construction standard covers the requirements for customer-owned, 27 kV, primary metering compartments connected to Seattle City Light's 26.4 kV, three-phase, 60 Hz, 4-wire, solidly grounded, isolated neutral, distribution system.

2. Application

This standard was created to assist Seattle City Light's customers, consultants, and contractors specify and acquire safe and reliable primary switchgear.

3. Industry Standards

Metering compartment shall meet the applicable requirements of the latest revisions of the following industry standards:

NFPA 70; National Electrical Code (NEC)

Electric Utility Service Equipment Requirements Committee (EUSERC)

4. Conflicts

Where conflict exists, the following order of precedence shall apply:

1. NFPA 70
2. Site-specific requirements
3. This Seattle City Light Construction Standard
4. EUSERC
5. Other industry standards

5. Definition

EUSERC (*pronounced U-SERC*) - Stands for Electric Utility Service Equipment Requirements Committee. The purpose of EUSERC is to promote uniform electric service requirements among the member utilities, publish existing utility service requirements for electric service equipment and provide direction for development of future metering technology. EUSERC's goal is to support the development of metering and service equipment that is safe and cost effective to the serving agencies and their customers, and to establish manufacturing and installation requirements for metering and service equipment that are acceptable to all member utilities. The term EUSERC may refer to the committee or their set of requirements.

standards coordinator	*standards supervisor*	*unit director*
Devyn Byrnes	John Shipek	Pamela S. Johnson

6. Discussion

Because it is revised on an annual basis, Seattle City Light's customers, consultants, and contractors are advised to refer to the latest revision of EUSERC.

A form for ordering copies of EUSERC may be found at www.euserc.com.

This standard was developed based on the April 2011 EUSERC.

7. Basic Requirements

7.1 Revenue Metering Compartment

The revenue metering compartment shall meet the requirement of EUSERC drawing 400.

7.2 High Voltage Metering Enclosure

The high voltage metering enclosure shall meet the requirements of EUSERC drawing 404.

7.3 Instrument Transformers

The mounting patterns for instrument transformers shall meet the requirements of EUSERC drawing 407.

Instrument transformers will be furnished and installed by Seattle City Light.

7.4 Meter Panel

Hinged meter panel shall meet the requirements of EUSERC drawing 408 with the following clarification: panel shall be furnished with a single, 13-terminal socket.

7.5 Meter Location

In an exception to EUSERC drawing 404, the meter shall be located in front of the potential transformer disconnect switch.

7.6 Current Transformer

Current transformer dimensions shall meet the requirements of EUSERC drawing 414.

7.7 Installation

Equipment installation shall meet the applicable requirements of EUSERC Section G, with the following clarification: Section 17 – Working Space shall be read as to reference the "bottom of the cabinet" for working surface and height dimensions.

8. Seattle City Light Requirements

8.1 Clearances

Distance from conduit end to middle phase termination landing pad shall be 60 inches minimum. Seattle City Light will allow a pit up to 25 inches deep to obtain minimum clearance. *Note: this requirement supersedes EUSERC drawing 404, revision 0, dated 01/09, sheet 1 of 3 which shows a 48-3/4 inch clearance between termination phase landing pads and the floor of the compartment.*

Distance from **end** of grounding ball to inside protective inner door shall be 12 inches minimum.

*Note: this requirement supersedes EUSERC drawing 404, revision 0, dated 01/09, sheet 1 of 3 which shows a 15-inch distance from **base** of grounding ball to inside edge of protective inner door.*

8.2 Conduit

Grounding bushings shall be provided and installed if conduit is rigid galvanized steel (RGS).

8.3 Lifting Eyes

Three lifting eyes shall be provided to facilitate installation or replacement of metering current transformers.

8.4 Neutral Pad

Neutral pad shall be insulated for phase-to-ground voltage passing between the termination compartment and the metering compartment. A copper pad predrilled with one set of 3/8-inch diameter holes on a 1-3/4-inch center shall be provided inside the termination compartment.

8.5 Bus

Bus shall be bare or plated copper.

8.6 Grounding Studs and Covers

Enclosure shall be equipped with a total of nine one-inch diameter ball-type grounding studs (one on each side of each current transformer plus ground), Salisbury catalog number 21191, to allow each phase to be safely checked for voltage with a hot stick-type voltage sensor and then grounded with hot stick-installed, ball and socket-type, grounding system.

figure 2, ball-type grounding stud
(Salisbury catalog Number 21191)

One hotstick-removable insulating cover, Salisbury catalog number 21236, shall be provided for each normally energized ball-type grounding stud.

8.7 Landing Pads

Each phase landing pad shall be provided with two sets of two 5/8-inch diameter holes on

8. Seattle City Light Requirements

8.7 Landing Pads, continued

1-3/4-inch vertical centers, each set separated horizontally 4-1/2-inch on center. Provide an additional 7/16-inch diameter hole per pad at least 1-3/4 inches away from the other holes for connecting surge arrester leads.

8.8 Surge Arresters

A grounded base plate shall be provided inside the termination compartment, predrilled with three 7/16-inch diameter holes for mounting surge arresters.

Surge arresters will be furnished and installed by Seattle City Light. Refer to Seattle City Light Material Standard 6801.4 / Stock Number 680117. *Note: Seattle City Light Material Standards are available online. Refer to: www.seattle.gov/light/engstd/*

8.9 Cable Support

A vertically mounted length of 1-5/8 inches by 1-5/8 inches strut channel shall be mounted on each side of the termination compartment. A third length of 1-5/8 inches by 1-5/8 inches strut channel shall be installed between the first two for mounting cable support hardware (provided by Seattle City Light).

8.10 Inner Door

A protective inner door consisting of a solid, high-strength, transparent, full-length, hinged, bolted-closed barrier (Lexan, clear polycarbonate, or approved equivalent) shall be provided inside each compartment main door in order to comply with Washington Administrative Code (WAC) 296-45-325, Table 1. *Note: Table 1 states for phase-to-phase voltages between 15.1 and 36.0 kV, the AC live work minimum approach distance shall be two feet ten inches.*

8.11 Padlock

Compartment door handles shall be designed to accommodate a padlock shackle for physical access control.

8.12 Termination Compartment Doors

Termination compartment doors shall be designed to accommodate a penta head bolt for back-up physical access control.

8.13 Humidity Control and Venting

Inside ceiling surfaces shall be coated with anti-condensation material.

An anti-condensation heater shall be provided near the floor.

Vents shall be provided at the top and bottom of the enclosure for air circulation.

Vents shall be equipped with filters to minimize dust and dirt ingress.

Vent filters shall be accessible from outside of the enclosure to allow the filters to be maintained without having to de-energize the switchgear.

Vents shall be designed to prevent the entrance of foreign objects.

8.14 Rain Shield

If for outdoor application, compartment entrances shall be provided with rain shields.

9. Project-Specific Requirements

Project-specific requirements, if any, shall be cited in Seattle City Light's Service Letter.

10. Approval Process

Seattle City Light's assigned Electric Service Engineer (ESE) shall be the customer's point of contact for all communication and submittals.

Customer shall submit two copies each of the following documents for review and approval.

- Project one line diagram
- Equipment manufacturer's design drawings

Seattle City Light's assigned Electric Service Engineer (ESE) shall coordinate the review of the manufacturer's design drawings with Seattle City Light's Meter Section.

Customer shall obtain Seattle City Light approval before releasing metering compartment design to the switchgear manufacturer for construction.

11. References

6801.4; "21 kV Heavy Duty Distribution Class, Polymer, Metal-Oxide Surge Arrester;" Material Standard; SCL

Byrnes, Devyn; SCL Standards Student Intern and subject matter expert for Standard 1562.05 (devyn.byrnes@seattle.gov)

EUSERC Manual; Electric Utility Service Equipment Requirements Committee (EUSERC); April 2009; www.euserc.com

Gallagher, Patrick; Technical Metering, Industrial Crew Chief and subject matter expert for Standard 1562.05 (patrick.gallagher@seattle.gov)

Requirements for Electrical Service Connection; SCL; January 26, 2007

Salisbury Catalog; WH Salisbury Co.; 2006

Seattle City Light Standards web site: www.seattle.gov/light/engstd/

Shipek, John; SCL Standards Engineer, subject matter expert and originator of Construction Standard 1562.05 (john.shipek@seattle.gov)

WAC 296-45-325; [working on or near exposed energized parts]; Washington Administrative Code

PRIMARY METERING COMPARTMENT REQUIREMENTS, 5 KV AND 15 KV

1. Scope

This construction standard covers the requirements for customer-owned, 5 kV and 15 kV, primary metering compartments connected to Seattle City Light's 4.16 kV and 13.8 kV, three-phase, 60 Hz, 4-wire, solidly grounded, isolated neutral, distribution system.

2. Application

This standard was created to assist Seattle City Light's customers, consultants, and contractors specify and acquire safe and reliable primary switchgear.

3. Industry Standards

Metering compartment shall meet the applicable requirements of the latest revisions of the following industry standards:

NFPA 70; National Electrical Code (NEC)

Electric Utility Service Equipment Requirements Committee (EUSERC)

4. Conflicts

Where conflict exists, the following order of precedence shall apply:

1. NFPA 70
2. Site-specific requirements
3. This Seattle City Light Construction Standard
4. EUSERC
5. Other industry standards

5. Definition

EUSERC (*pronounced U-SERC*) - Stands for Electric Utility Service Equipment Requirements Committee. The purpose of EUSERC is to promote uniform electric service requirements among the member utilities, publish existing utility service requirements for electric service equipment and provide direction for development of future metering technology. EUSERC's goal is to support the development of metering and service equipment that is safe and cost effective to the serving agencies and their customers, and to establish manufacturing and installation requirements for metering and service equipment that are acceptable to all member utilities. The term EUSERC may refer to the committee or their set of requirements.

standards coordinator	*standards supervisor*	*unit director*
Devyn Byrnes	John Shipek	Pamela S. Johnson

6. Discussion

Because it is revised on an annual basis, Seattle City Light's customers, consultants, and contractors are advised to refer to the latest revision of EUSERC.

A form for ordering copies of EUSERC may be found at www.euserc.com.

This standard was developed based on the 2010 EUSERC.

7. Basic Requirements

7.1 Revenue Metering Compartment

The revenue metering compartment shall meet the requirement of EUSERC drawing 400.

7.2 High Voltage Metering Enclosure

The high voltage metering enclosure shall meet the requirements of EUSERC drawing 401.

7.3 Instrument Transformers

The mounting patterns for instrument transformers shall meet the requirements of EUSERC drawing 407.

Instrument transformers will be furnished and installed by Seattle City Light.

7.4 Meter Panel

Hinged meter panel shall meet the requirements of EUSERC drawing 408 with the following clarification: panel shall be furnished with a single, 13-terminal socket.

7.5 Current Transformer

Current transformer dimensions shall meet the requirements of EUSERC drawing 407.

7.6 Installation

Equipment installation shall meet the applicable requirements of EUSERC Section G, with the following clarification: Section 17 – Working Space shall be read as to reference the “bottom of the cabinet” for working surface and height dimensions.

8. Seattle City Light Requirements

8.1 Clearances

Distance from conduit end to middle phase termination landing pad shall be 60 inches minimum. Seattle City Light will allow a pit up to 25 inches deep to obtain minimum clearance. *Note: this requirement supersedes EUSERC drawing 401, revision 0, dated 01/09, sheet 2 of 3 which shows a 36-3/4 inch minimum clearance between termination phase landing pads and the floor of the compartment.*

For 15 kV compartments the distance from **end** of grounding ball to the grounded inner door shall be 6 inches minimum.

For 5 kV compartments the distance from **end** of grounding ball to the grounded inner door shall be 3.5 inches minimum.

Note: these requirements are consistent with EUSERC drawing 401, revision 0, dated 01/09, sheet 2 of 3.

8.2 Conduit

Grounding bushings shall be provided and installed if conduit is rigid galvanized steel (RGS).

8.3 Lifting Eyes

For 15 kV compartments three lifting eyes shall be provided to facilitate installation or replacement of metering current transformers. Lifting eyes are not required for 5 kV compartments.

8.4 Neutral Pad

Neutral pad shall be insulated for phase-to-ground voltage passing between the termination compartment and the metering compartment. A copper pad predrilled with one set of 3/8-inch diameter holes on a 1-3/4-inch center shall be provided inside the termination compartment.

8.5 Bus

Bus shall be bare or plated copper.

8.6 Grounding Studs and Covers

Enclosure shall be equipped with a total of nine one-inch diameter ball-type grounding studs (one on each side of each current transformer plus ground), Salisbury catalog number 21191, to allow each phase to be safely checked for voltage with a hot stick-type voltage sensor and then grounded with hot stick-installed, ball and socket-type, grounding system.

Figure 1, ball-type grounding stud
(Salisbury catalog Number 21191)

One hotstick-removable insulating cover, Salisbury catalog number 21236, shall be provided for each normally energized ball-type grounding stud.

8.7 Landing Pads

Each phase landing pad shall be provided with two sets of two 5/8-inch diameter holes on 1-3/4-inch vertical centers, each set separated horizontally 4-1/2 inches on center. Provide an additional 7/16-inch diameter hole per pad at least 1-3/4 inches away from the other holes for connecting surge arrester leads.

8. Seattle City Light Requirements

8.8 Surge Arresters

A grounded base plate shall be provided inside the termination compartment, predrilled with three 7/16-inch diameter holes for mounting surge arresters.

Surge arresters will be furnished and installed by Seattle City Light.

Surge arresters shall be: Cooper Power Systems URT1005-0M0D-0A1A or performance equivalent.

8.9 Cable Support

A vertically mounted length of 1-5/8 inch by 1-5/8 inch strut channel shall be mounted on each side of the termination compartment. A third length of 1-5/8 inch by 1-5/8 inch strut channel shall be installed between the first two for mounting cable support hardware (provided by Seattle City Light).

8.10 Padlock

Compartment door handles shall be designed to accommodate a padlock shackle for physical access control.

8.11 Termination Compartment Doors

Termination compartment doors shall be designed to accommodate a penta head bolt for back-up physical access control.

8.12 Humidity Control and Venting

Inside ceiling surfaces shall be coated with anti-condensation material.

An anti-condensation heater shall be provided near the floor.

Vents shall be provided at the top and bottom of the enclosure for air circulation.

Vents shall be equipped with filters to minimize dust and dirt ingress.

Vent filters shall be accessible from outside of the enclosure to allow the filters to be maintained without having to de-energize the switchgear.

Vents shall be designed to prevent the entrance of foreign objects.

8.13 Rain Shield

If for outdoor application, compartment entrances shall be provided with rain shields.

9. Project-Specific Requirements

Project-specific requirements, if any, shall be cited in Seattle City Light's Service Letter.

10. Approval Process

Seattle City Light's assigned Electric Service Engineer (ESE) shall be the customer's point of contact for all communication and submittals.

Customer shall submit two copies each of the following documents for review and approval.

- Project one line diagram
- Equipment manufacturer's design drawings

Seattle City Light's assigned Electric Service Engineer (ESE) shall coordinate the review of the manufacturer's design drawings with Seattle City Light's Meter Section.

Customer shall obtain Seattle City Light approval before releasing metering compartment design to the switchgear manufacturer for construction.

11. References

235-99; UltraSIL Polymer-Housed Evolution (10kA) Surge Arresters; (Electrical Apparatus); Cooper Power Systems; September 2008

Byrnes, Devyn; SCL Standards Student Intern and subject matter expert for Standard 1562.55 (devyn.byrnes@seattle.gov)

EUSERC Manual; Electric Utility Service Equipment Requirements Committee (EUSERC); 2011; www.euserc.com

Gallagher, Patrick; Technical Metering, Industrial Crew Chief and subject matter expert for Construction Standard 1562.55.

Requirements for Electrical Service Connection; SCL; January 26, 2007

Salisbury Catalog; WH Salisbury Co.; 2006

Shipek, John; SCL Standards Engineer, subject matter expert and originator of Construction Standard 1562.55 (john.shipek@seattle.gov)

WAC 296-45-325; [working on or near exposed energized parts]; Washington Administrative Code

STREETLIGHT SYSTEM GROUNDING AND BONDING

1. Scope

This Construction Standard covers the grounding and bonding requirements for 120/240V, single phase streetlight systems served by the Looped Radial and Network distribution systems.

Multiphase streetlight systems and streetlights attached to wood poles or served exclusively by overhead conductors are outside the scope of this document.

2. Application

This document provides direction to SCL crews and others about properly grounding and bonding SCL streetlight equipment including handholes and poles. The purpose is to ensure streetlight equipment is uniformly and properly installed by SCL crews and others. The required bonding includes every metallic component of a particular system of streetlights including handhole lids and poles constructed of conductive material.

3. Introduction

The safety of an electrical system is dependent on its grounding and bonding system. Because conductors, exposed metallic components and surfaces can become energized, it is critical that grounding and bonding systems be installed correctly.

Providing a dedicated grounding conductor throughout a streetlight circuit and connecting it to all metal components within that system creates a dedicated, low resistance path that fault current can take in the case that any energized conductors come in contact with metal surfaces in that system. During a fault, current travels through all available paths back to the source, in this case a transformer. Providing a good fault current return path ensures that fault current can quickly and effectively return to the power source and operate the protective device.

4. Definitions

Bonding: the electrical interconnecting of conductive parts, designed to maintain a common electrical potential. (NESC, 2007)

Ground (conductor): a conductor used to carry fault current from the fault location back to the energy's source.

Grounded: connected to or in contact with earth or connected to some extended conductive body that serves instead of the earth. (NESC, 2007)

Ground Rod (or driven rod): one of the seven types of approved grounding electrodes listed in Section 9 of the NESC, Grounding Methods. Per the NESC, the rod must be at least eight feet long and one-half-inch in diameter.

For the purpose of this standard, conductors in the figures are color coded as follows.

- L1 – Black
- L2 (if more than one) – Red
- Neutral – White
- Ground – Green

5. Looped Radial Streetlight System, Overall

Figure 5 presents an example of a two branch streetlight system supplied by the Looped Radial distribution system. Shown in the plan view are streetlights, the handholes that serve each streetlight, and the streetlight distribution handhole/ manhole that connects the streetlight system to the Looped Radial distribution system via an overhead transformer.

When multiple circuits are used to serve a section of streetlights, the circuits shall be alternated between streetlights. Alternating circuits ensure, in the case of a one-circuit fault, that every other streetlight would have power until repairs to the faulted circuit are completed.

standards coordinator	standards supervisor	unit director
Brett Hanson	John Shipek	Darnell Cola

5. Looped Radial Streetlight System, Overall, continued

Figure 5, Two Branch Streetlight System Supplied by Looped Radial System – Example

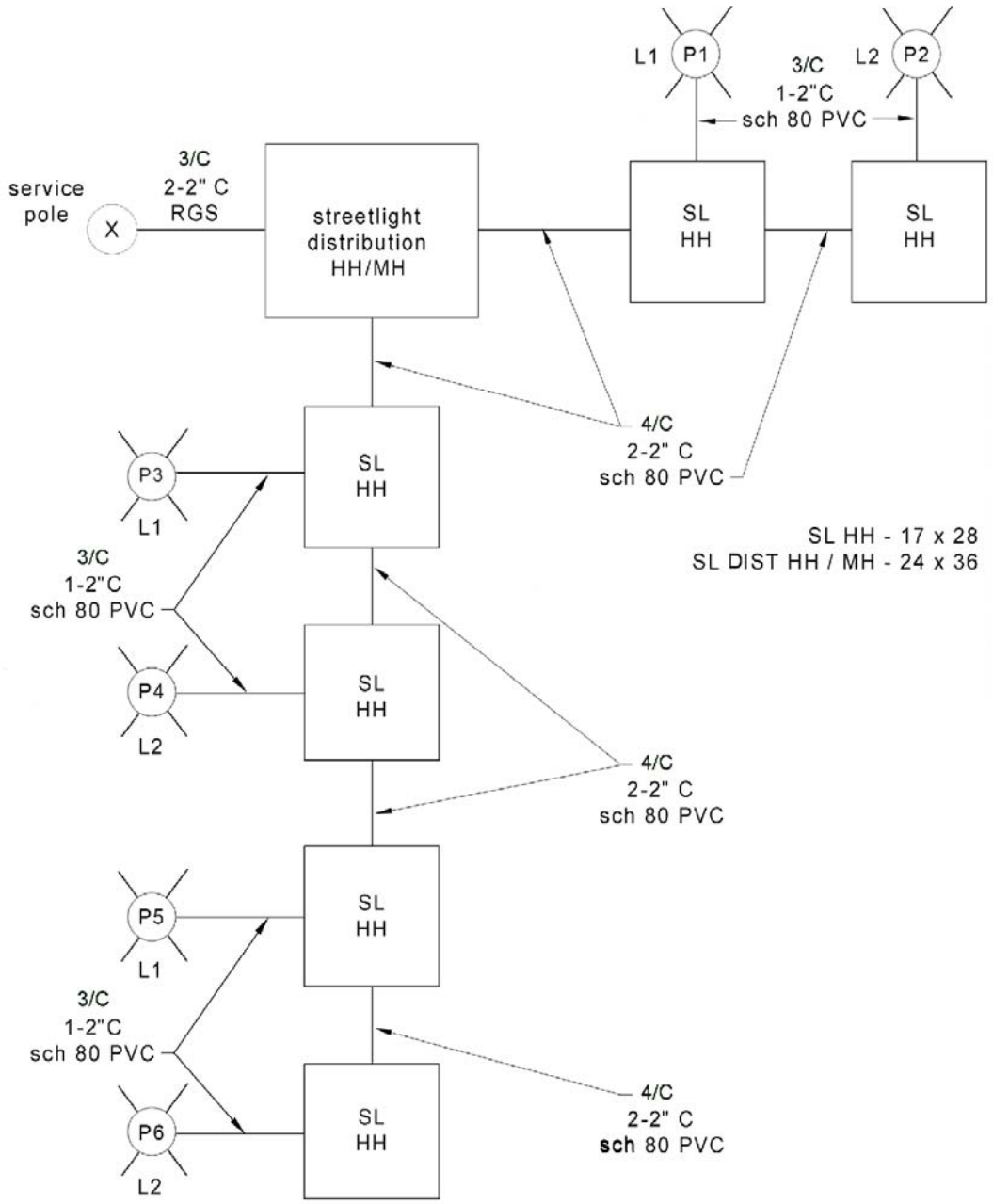

6. Network Streetlight System, Overall

Figure 6 presents an example of a two branch streetlight system supplied by the Network distribution system. Shown in plan view are streetlights, the handholes that serve each streetlight handhole and the streetlight distribution handhole/manhole that connects the system to the Network distribution system via a transformer in a Network vault.

When multiple circuits are used to serve a section of streetlights, the circuits shall be alternated between streetlights. Alternating circuits ensure, in case of a one-circuit-fault, that every other streetlight would have power until repairs to the faulted circuit are completed.

In the SCL streetlight system, the green ground conductor shall be no smaller than #6 AWG copper.

Figure 6, Two Branch Streetlight System Supplied by Network Distribution System – Example

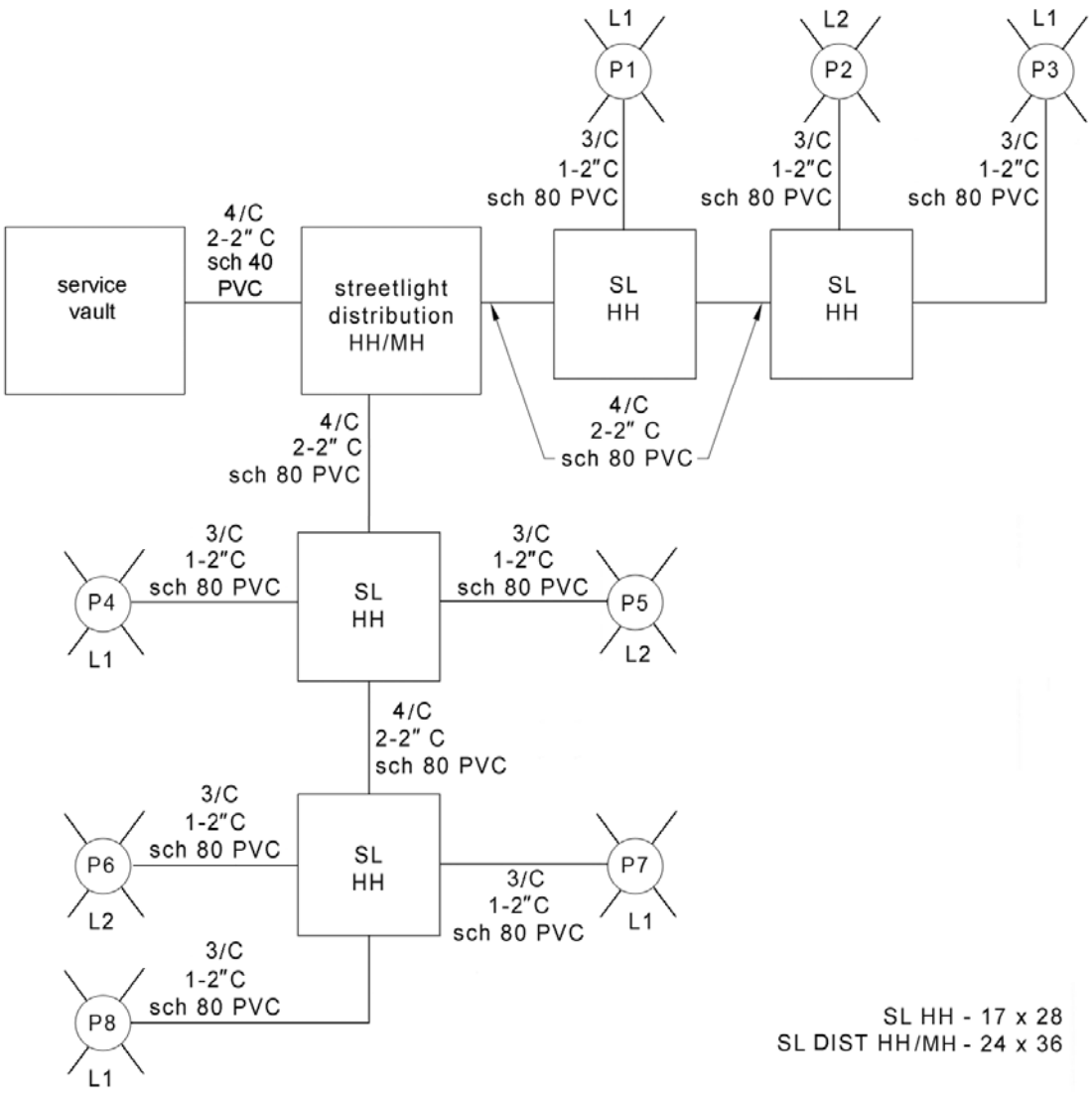

7. Streetlight Distribution Handhole/ Manhole

The streetlight distribution handhole is the starting point of the streetlight system, connecting to the distribution system via a transformer and to the individual streetlights via a series of conduits and handholes.

Conductors from the transformer secondary enter, are spliced as necessary, and leave via conduits, typically Schedule 80 PVC. In this handhole, a ground rod is driven and connected to both the lid ground lug, frame ground lug, dedicated green grounding conductor, and any metal conduits that enter or leave the handhole via an insulated grounding bushing. In the Looped Radial distribution system, the green grounding conductor will be bonded to the neutral in this handhole.

See Figure 7.1. This is the only point in the system that the neutral and ground conductors are bonded together. The green grounding conductor shall be tested along its entire length to insure it is continuous all the way back to the energy source. The ground rod or series of ground rods shall be tested to insure it has a resistance to ground of 25 ohms or less.

In the Network distribution system the green grounding conductor is bonded to the neutral within the Network vault, so no neutral to ground connections are made in the streetlight distribution handhole. See Figure 7.2. The green grounding conductor shall be tested along its entire length to insure it is continuous all the way back to the energy source.

As each conductor (L1 or L2) leaves the distribution handhole, it must be fused.

Figure 7.1, Streetlight Distribution Handhole/Manhole – Two Branch Looped Radial Example

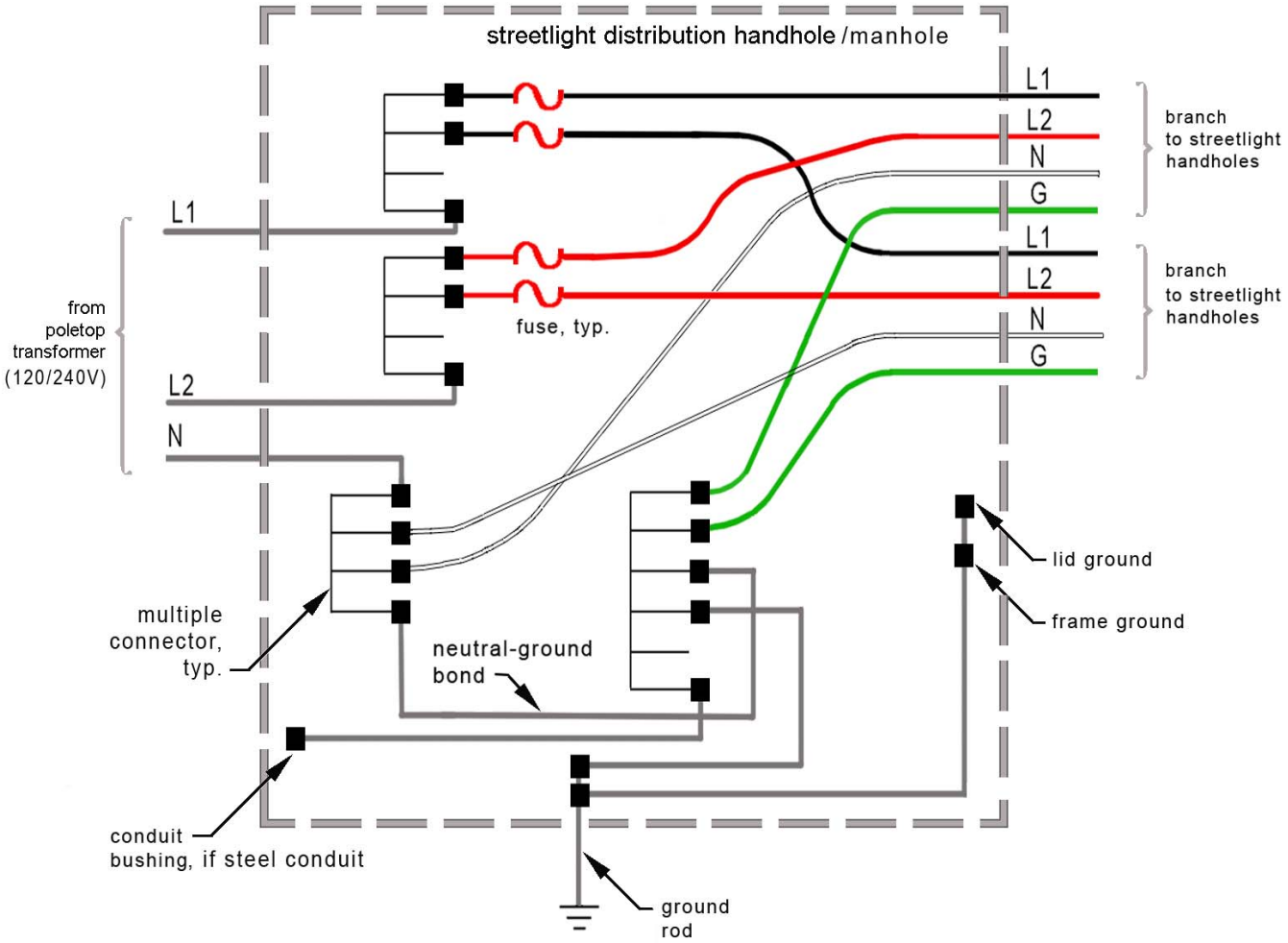

7. Streetlight Distribution Handhole/Manhole, continued

Figure 7.2, Streetlight Distribution Handhole/Manhole – Two Branch Network Example

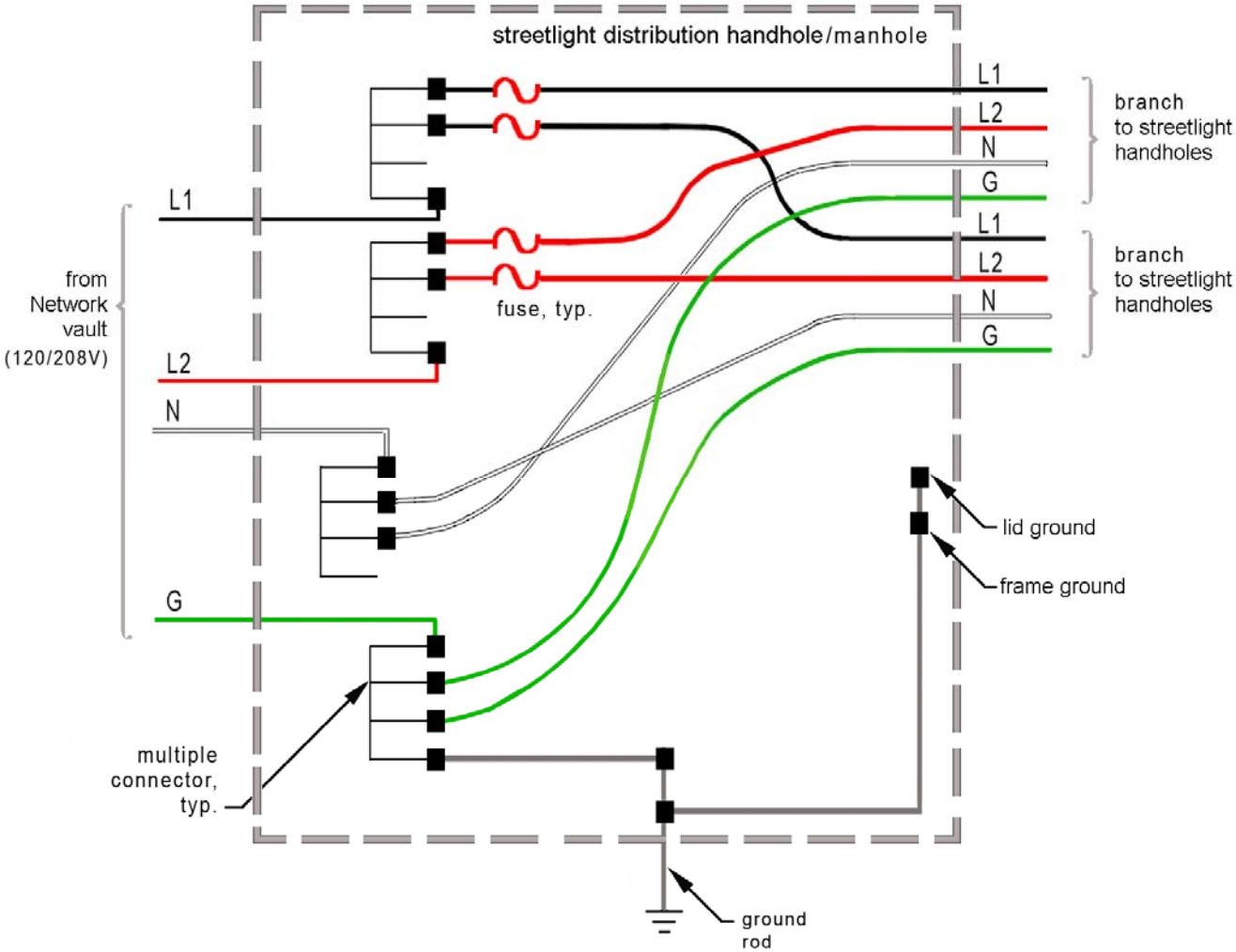

8. Individual Streetlight Pole Handhole and Streetlight Handhole, Typical

The streetlight handhole connects to the streetlight distribution handhole (section 7), one or more streetlights, and any subsequent streetlight handholes in the system. See Figures 8.1, 8.2 and 8.3. The green grounding conductor routed from the streetlight distribution handhole shall be connected to all metal components in the handhole and the streetlight pole, and a ground rod if it's present. Note: The ground conductor is not bonded to the neutral in the streetlight handhole.

From the streetlight handhole, line, neutral, and ground conductors are routed within conduit to the cavity of the streetlight pole where they can be intercepted via a streetlight pole handhole in the side of the pole. In this streetlight pole handhole, the line conductor is fused and routed up to the luminaire with the neutral conductor. At the streetlight pole handhole, the ground conductor is connected to the metal pole with a set screw lug and to the grounding electrode if one is installed. The ground conductor is then routed up to the luminaire where it is connected to the fixture's ground terminal.

8. Individual Streetlight Pole Handhole and Streetlight Handhole, Typical, continued

Figure 8.1, Streetlight Pole Handhole and Streetlight Handhole

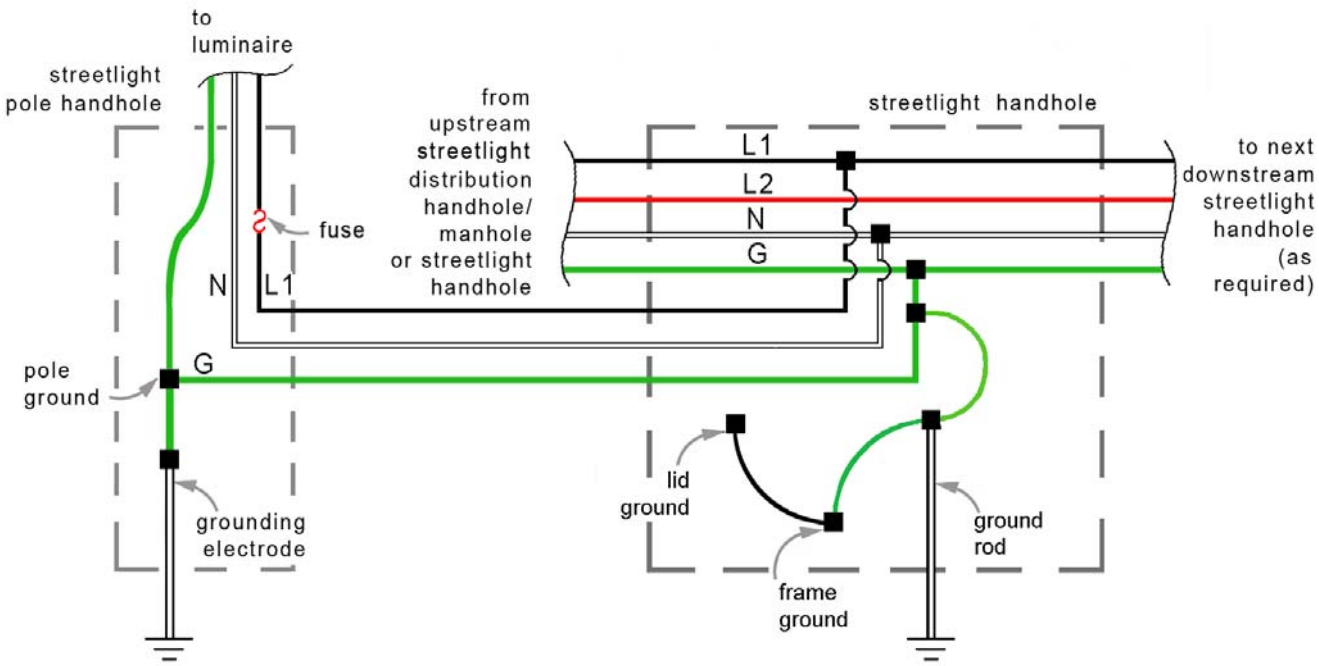

Figure 8.2, Streetlight Pole Handhole

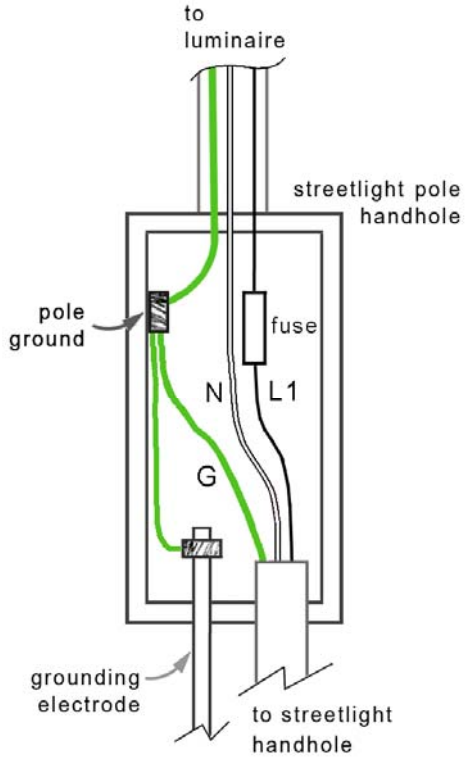

Figure 8.3, Streetlight Handhole

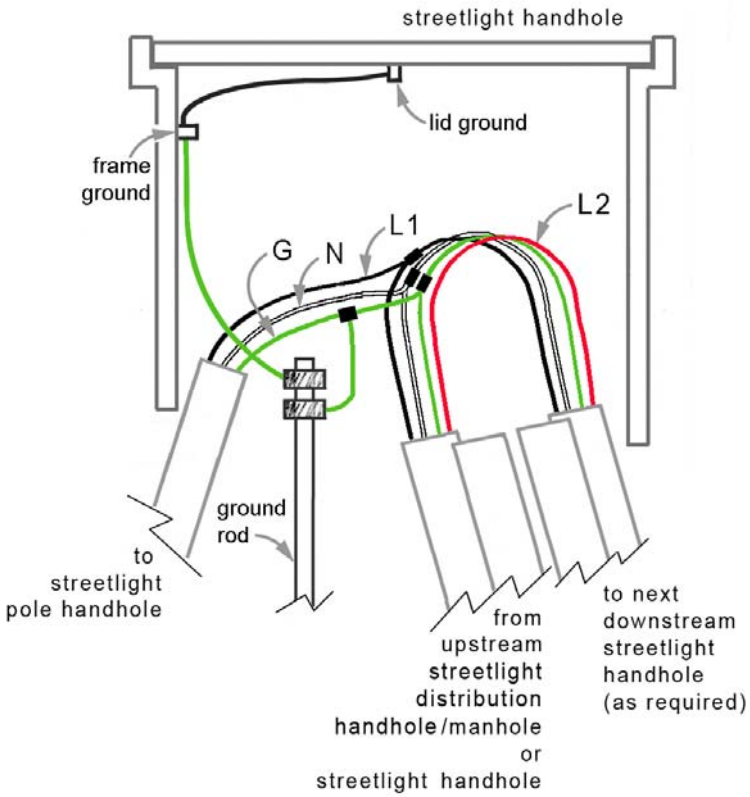

9. Grounding and Bonding Retrofit of Existing Streetlights

9.1 Discussion

When adding, repairing, or replacing streetlights on an existing circuit, it is necessary to retrofit the existing handholes and poles that are part of that system to ensure a properly grounded and bonded system.

If a spare conduit is present, install a properly grounded and bonded system as detailed in Sections 7 and 8.

If any components of the grounding system are missing (ground rod, two hole set screw lug in streetlight pole, etc) or damaged refer to appropriate section below in order to repair or replace them.

9.2 Retrofit of existing streetlights with green equipment grounding conductor already present. See Figures 8.1, 8.2 and 8.3.

Confirm that the green equipment grounding conductor has been routed from the streetlight distribution handhole and throughout length of the circuits present.

At the streetlight distribution handhole, confirm the grounding conductor is bonded to the neutral wire and a ground rod.

Confirm all metallic components along the streetlight circuit including ground rods, handhole covers, and metal streetlight poles are connected to the grounding conductor.

Finished installation should be connected per Figures 8.1, 8.2 and 8.3.

9.3 Retrofit of existing streetlights with no ground rod or green equipment grounding conductor. See Figure 9.1.

Install a ground rod near the streetlight pole. (Stock No. 564238E)

Figure 9.1
Existing streetlight with no ground rod or grounding conductor (as found)

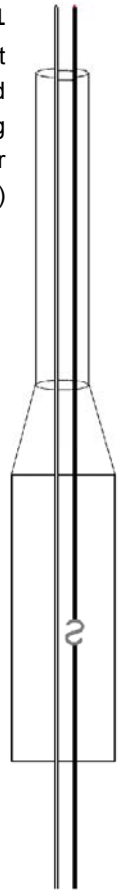

Figure 9.2
Existing streetlight with ground rod but no grounding conductor. (as found)

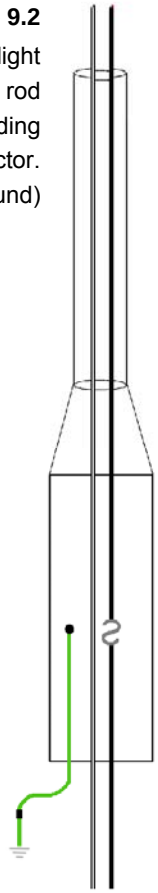

Figure 9.3
Retrofitted streetlight with ground rod connected to pole and neutral conductor. (as left)

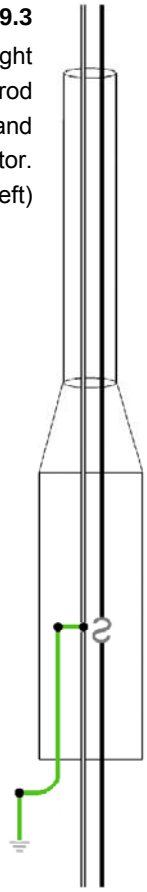

9. Grounding and Bonding Retrofit of Existing Streetlights, continued

9.3 continued

Bond neutral to grounding conductor using split bolt connector (Stock No. 668862E) on neutral and connect green THWN ground wire (Stock No. 612288) from split bolt connector to set screw lug.

Install a grounding conductor (Stock No. 610600) from the ground rod and route it into the pole base.

Install two hole set screw lug onto wall of metallic streetlight pole (Stock No. 651314) and connect to grounding conductors.

Finished installation should be connected per Figure 9.3

9.4 Retrofit of existing streetlights with ground rod, but no green equipment grounding conductor. See Figure 9.2.

Install two hole set screw lug onto wall of metallic streetlight pole (Stock No. 651314) and connect to grounding conductors.

Bond neutral to grounding conductor using split bolt connector (Stock No. 668862E) on neutral and connect green THWN ground wire (Stock No. 612288) from split bolt connector to set screw lug.

Finished installation should be connected per Figure 9.3.

10. Material List

Description	Stock Number
FUSE HOLDER, 600 V, Buss Cat. HEB-JY	682353
FUSE, see fusing schedule SL12-1/NSL-10	–
TERMINAL LUG, aluminum, #14-1/0, ILSCO	651314
TAPE, pressure sensitive 3/4″	736655E
GROUND ROD, 5/8″ x 8′	564238E
GROUND ROD STUD, 5/8″	564604
GROUND ROD COUPLING, 5/8″	564074
GROUND ROD CLAMP, 5/8″	564012E
BOOT, insulating, type L, buss	682360
CONDUIT, Schedule 80 PVC, 2″	738741
CONDUIT, steel, 2″	734741
ELBOW, steel, 2″	734809
SPLIT BOLT TAP	668862E
MULTIPLE CONNECTOR, 3 position	678703
MULTIPLE CONNECTOR, 4 position	678707
MULTIPLE CONNECTOR, 6 position	678713
MULTIPLE CONNECTOR, 8 position	678715
TERMINAL LUGS, #6	678695E
WIRE, copper-clad, stranded	610600
LUG, two hole, set screw	651314
BUSHING, grounding, insulated, 2″	751531

11. References

0233.05; "Secondary Handhole Grounding;" Construction Standard; SCL

9702.30, "Grounding and Bonding, Fundamentals and Detailed Requirements;" Design Standard; SCL

Barnett, John; SCL Engineer; subject matter expert (john.barnett @seattle.gov)

Deutscher, Cary; SCL Engineer; subject matter expert (cary.deutscher @seattle.gov)

Hanson, Brett; SCL Standards Engineer, subject matter expert and co-originator of 1710.50 (brett.hanson@seattle.gov)

IEEE 100-2000; The Authoritative Dictionary of IEEE Standards Terms; Seventh Edition; IEEE; 2000

IEEE C2-2007; National Electric Safety Code (NESC); 2007

Lu, Curtis; SCL Standards Engineer, subject matter expert and co-originator of 1710.50 (curtis.lu@seattle.gov)

NEC Article 250, "Grounding and Bonding;" NFPA 70 2008 Handbook; National Electric Code; 2008

SL10-2/ NSL-50; cancelled; "Arterial and Residential Street Lighting, Installation Details for Anchor Base Aluminum Standard, Mast Arm Luminaire with PE Control"; Construction Guideline; SCL

Smalley, Edward; SCL Engineer, subject matter expert (edward.smalley@seattle.gov)

Soares Book on Grounding and Bonding; International Association of Electrical Inspectors; 2004

STREETLIGHT LUMINAIRE INSTALLATION ON WOOD POLES

1. Scope

This Construction Standard provides the requirements and details for the installation of overhead residential and arterial streetlight luminaires on wood poles.

2. Application

This document instructs SCL crews how to construct and install both light-emitting diode (LED) and high pressure sodium streetlight luminaires for arterial and residential lighting applications.

standards coordinator	standards manager	unit director
Devyn Byrnes	John Shipek	Pamela S. Johnson

3. Details and Design

Figure 3.1, Installation Detail

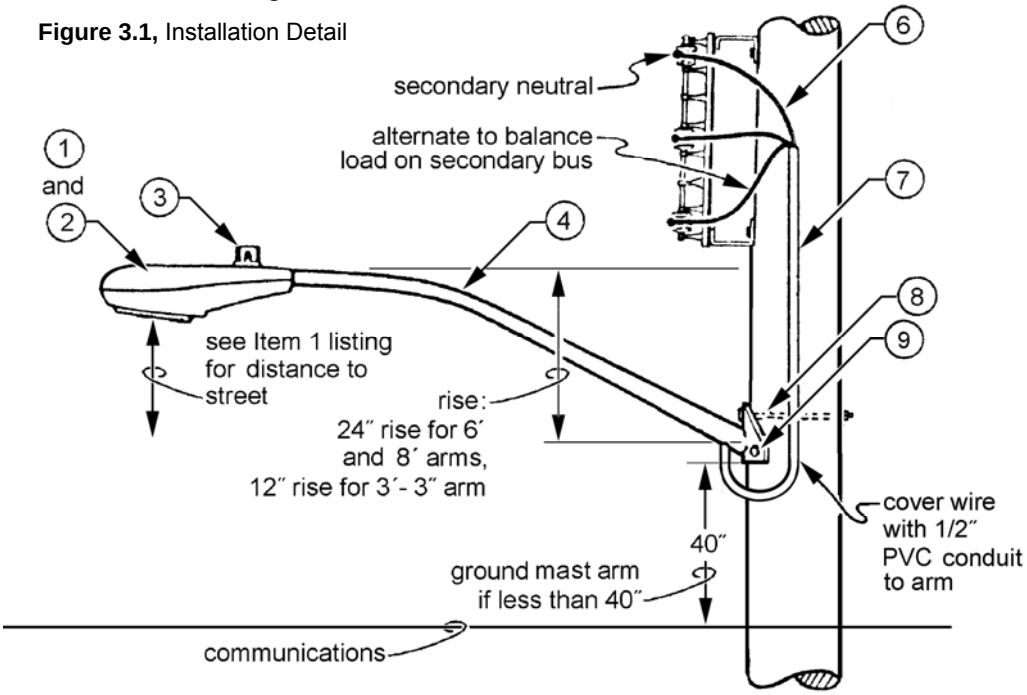

Figure 3.2, Setscrew Lug

Figure 3.3, Shepherd's Hook

3.1 If there is less than 40 inches between the mast arm and the communications line, the mast arm must be grounded to the neutral or to the communications bracket. Ground the mast arm using a setscrew lug (item 5, Figure 3.2).

3.2 Connect for 120 volt operation.

3.3 Mark the installation date on the photoelectric control base and on the lamp using a marking pen.

3.4 Face the photoelectric control to the north.

3.5 Arm to be mounted at 90 degrees to the face of the curb.

3.6 Use a straight section of PVC conduit and heat the end to create a Shepherd's hook to completely cover wire into the streetlight arm. See Figure 3.3.

3.7 A lamp is not required if installing an LED streetlight luminaire.

4. Material List

Item	Quantity	Description			Stock No.
1	1	LUMINAIRE, LED, see detail note 3.7 – no lamp required			
		normal mounting height 25´ on residentials		70 W	013078
		normal mounting height 30´ on arterials		70 W	013078
		LUMINAIRE, High Pressure Sodium, flat lens, lamp required			
		normal mounting height 35´ on arterials		250 W	572800
		normal mounting height 35´ on arterials		400 W	572801
2	1	LAMP, High Pressure Sodium, clear, 30,000 hour, mogul- base			
				250 W	012744
				400 W	012745
3	1	PHOTOCONTROL	105-305 V		569333
4	1	BRACKET, Aluminum, luminaire support		3´ - 3″	570501
				6´ - 0″	570502
				8´ - 0″	570503
				10´ - 0″	570507
5	as required	WIRE, THWN, 600 V, copper	#8 AWG		612277
6	as required	WIRE, 600 V, PVC jacket	#12 AWG		640440
7	as required	CONDUIT, PVC Schedule 40	1/2″		734525
8	1	BOLT, Galvanized, machine	5/8″ x 12″		780845E
9	2	SCREW, Galvanized, lag	1/2″ x 4″		785261E
10	2	CLAMP, Parallel Groove, bolted			652020E
11	1	LUG, setscrew			012564E
12	1	SCREW, self-drilling, hex washer head,	3/8″ x 3/4″		012565E

5. References

Brewer, Steve; SCL Crew Chief; subject matter expert; (steve.brewer@seattle.gov)

Byrnes, Devyn; SCL Standards student intern; subject matter expert (devyn.byrnes@seattle.gov)

Lu, Curtis; SCL Standards Engineer; subject matter expert and originator; (curtis.lu@seattle.gov)

Marsten, Vicki; SCL Streetlight Engineering; subject matter expert; (vicki.marsten@seattle.gov)

dummy tab front - D2 - D6

dummy tab back - D2 - D6

STANDARD SPACING OF ARMS

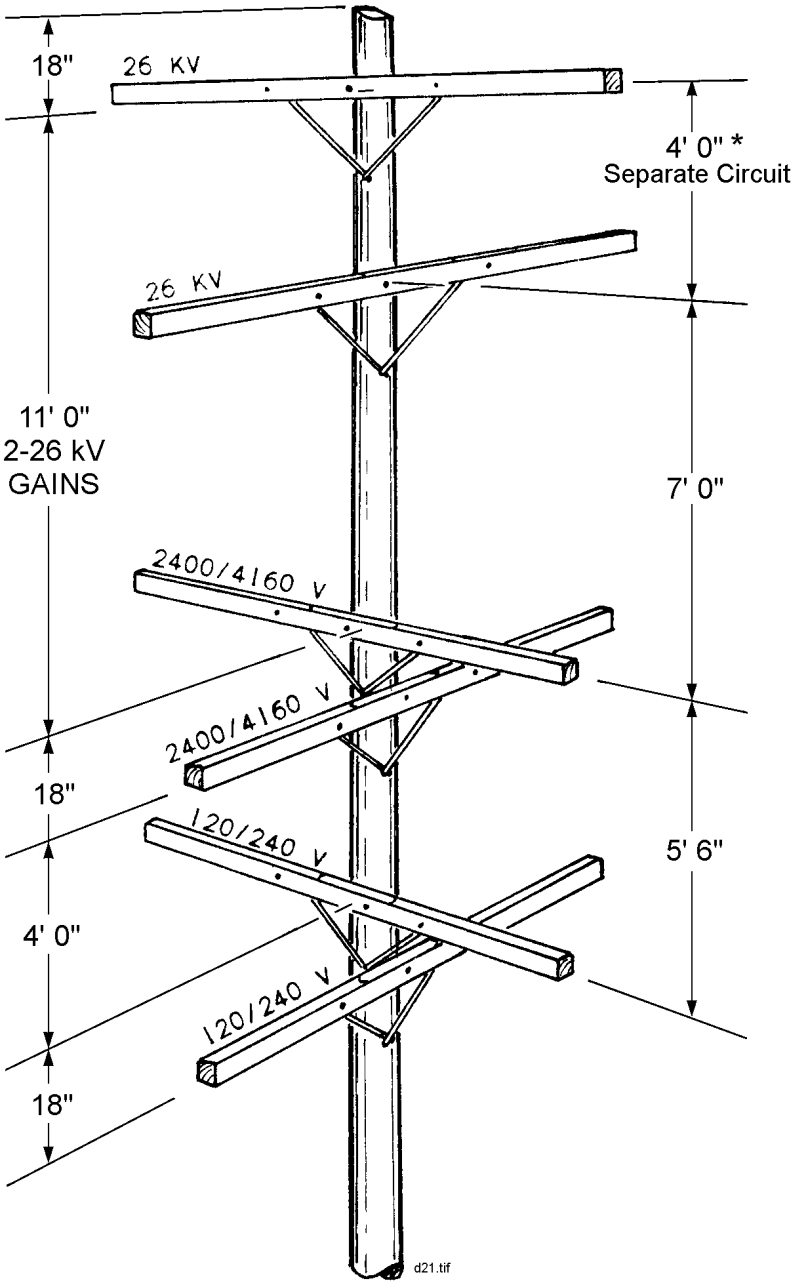

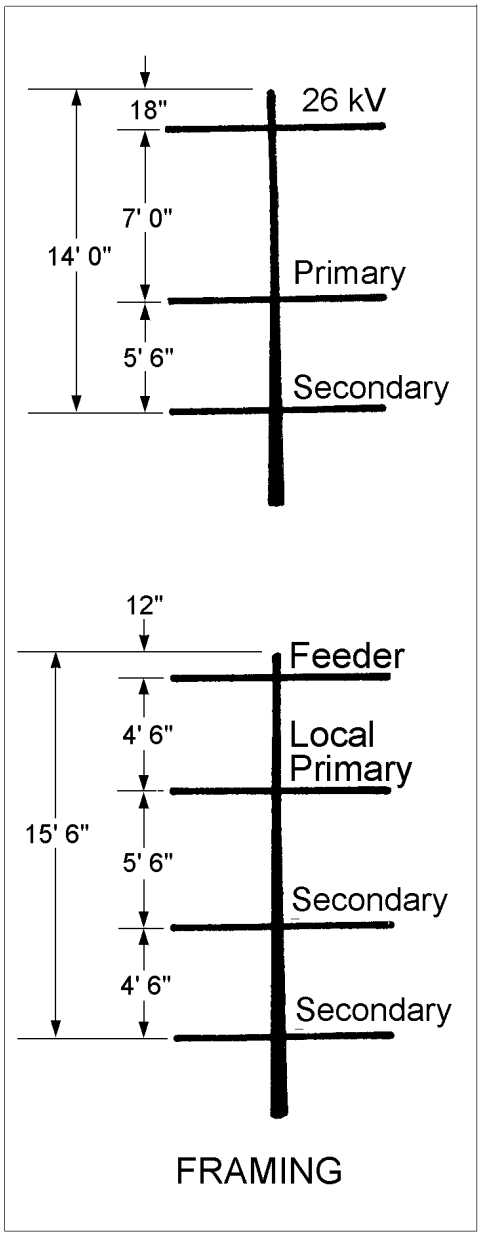

*Increase 26kV arm spacing to 5 feet for 600 amp feeders within one mile of receiving substations and to 7 feet for 954 ACSR feeders (See D9-51.).

ORIGINATOR	STANDARDS COORDINATOR	STANDARDS SUPERVISOR	UNIT DIRECTOR
Jim S. Horn	Charles L. Shaffer	John C. Skinner	Betty Robin

ATTACHMENTS ON STANDARD UTILITY POLES

1. Attachment Spacing

1.1 Figure 1

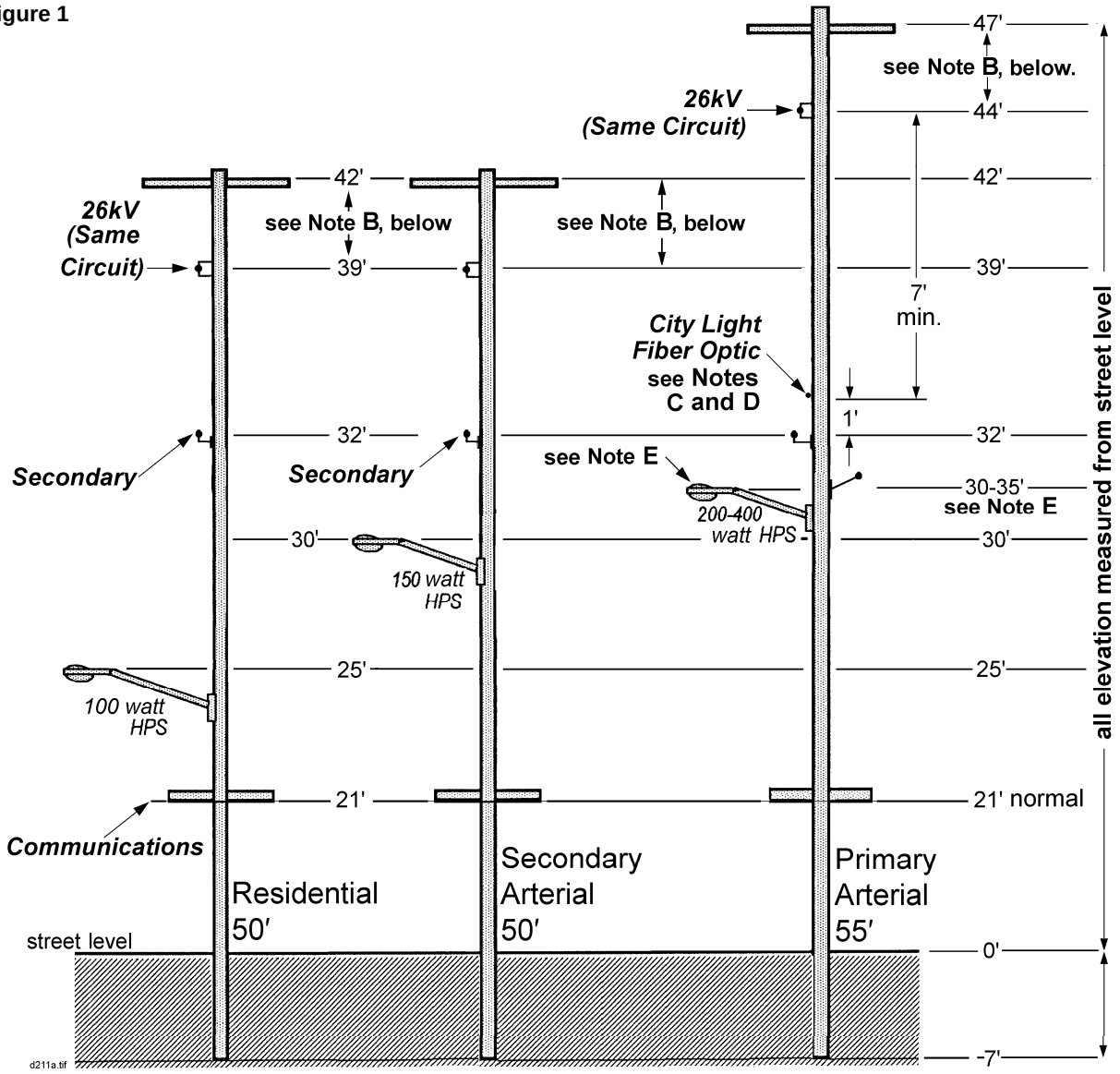

1.2 Attachment Spacing Notes:

A. See Construction Guideline D2-1 for spacing of arms.

B. Increased spacing may be required when using 954 conductors.

C. Attach City Light fiber optic duct with serpentine messenger suspension clamp (Stock No. 010314).

D. Ground fiber optic duct messenger (Stock No. 012257).

E. Height for luminaire head should be determined by design engineer. Acceptable range, 25 to 35 feet, depending on wattage and design but attachment point not higher than the secondary.

standards coordinator	standards supervisor	unit director
John Shipek	John Shipek	Pam S. Johnson

2. Typical Spacing Details

Figure 2

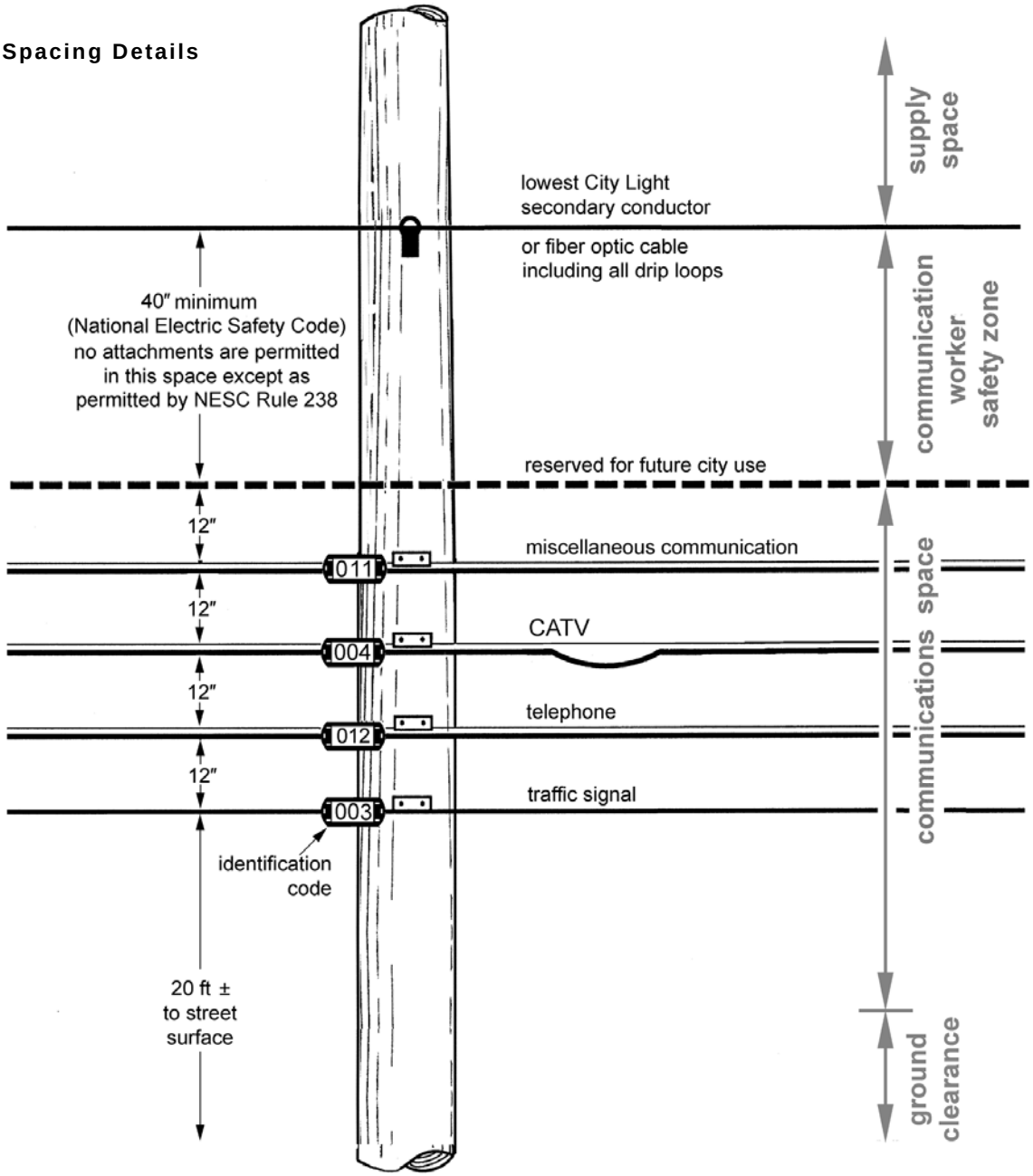

3. Standard Utility Pole Attachment Identification

3.1 Identification of attachments is necessary to assist in repair of third party or storm damage to cables, equipment cabinets, conduit risers and other pole attachments.

3.2 For this purpose, a unique three digit identification number shall be assigned by Seattle City Light Joint Use to those organizations that have a master pole attachment agreement (Renter) with Seattle City Light (see section 5).

3.3 Identification tags shall be applied by the organization with the SCL agreement (see 3.2) to equipment at every location to which the equipment is attached including all cables, risers, handholes, equipment boxes, etc.(see section 4).

3.4 Nothing herein shall be construed so as to require Seattle City Light to tag or label any electrical distribution circuit or facilities. The tagging code for Seattle City Light pertains to fiber optic and other communications facilities. SCL fiber optic and communications are tagged with **001**.

4. Identification Tag Requirements

4.1 Tags shall be applied at every pole to which cable is attached.

4.2 Tags shall be applied on all conduit risers.

4.3 Tags shall be applied on all pole mounted equipment enclosures.

4.4 Tag shall be securely attached and be clearly visible from the ground.

4.5 All marking tags, carriers (holders) and attaching devices shall be durable and ultraviolet (UV) resistant – (non UV inhibited plastic tie wraps not acceptable).

4.6 The numbers shall be one inch high black on yellow background.

4.7 The number carriers (holders) shall be non-conductive.

4.8 A sample of proposed tagging shall be submitted to SCL Pole Asset Management for approval along with the attachment application. SCL crews should use cable maker labels, SCL Stock No. 012510, for all fiber attachments.

4.9 Pre-approved tags (no submission required – paragraph 4.8 above) include:

- Tech Products “Everlast” with type ELHY letters in a PH103 holder.
- Tech Products “Wrap-Around Marker,” item no. MMOM4Y.
- ACP International “Poly-V Cable Marker,” item no. PV-4.
- Electromark (details, see SCL Stock No. 012510).

5. Identification Codes by Code Number

Code	Organization
001	Seattle City Light
002	Dept. of Information Technology (DoIT)
003	SDoT
004	Comcast (formerly TCI Cablevision/AT&T)
005	VerizonBusiness (formerly MCI and MFS)
006	Alpac Corp.
007	American Music Co.
008	Atlantic Richfield Co.
009	Broadstripe (formerly MDM and Summit)
010	Boeing
011	Burlington Northern
012	Comcast (formerly Chambers Cable/AT&T)
013	Cascade Design
014	Electric Light Wave

5. Identification Codes, continued

Code	Organization
015	Fred Hutchinson Research Center
016	-
017	Comcast (formerly Teleport Comm. Group)
018	University of Washington
019	WRQ Inc.
020	Seattle University
021	Cinnabon/Restaurant Unlimited
022	XO Comm. Inc. (formerly XO Wash and Nextlink)
023	Time Warner Telecom
024	Olympic Pipeline
025	Cell Net
026	Seattle Pacific University
027	GTE Wireless
028	Mehrer Drywall
029	-
030	WSDOT
031	Adelphia Business Solutions
032	T-Mobile - Voicestream PCS III
033	Children’s Hospital
034	Huling Buick, Inc.
035	Seattle Public Utilities SPU
036	Cingular Wireless
037	King County Public Works
038	Swedish Medical Center
039	Ygnition Networks
040	City of Shoreline
041	CSS Communications
042	SEA-MAR
043	St. Therese Parish
044	ZymoGenetics
045	The Bush School
046	Marco Global Inc.
047	Crown Castle Solutions Corporation
048	PolyClinic
049	The NW School
050	Proscribe, Inc.
051	McKinstry Co.
052	OnFiber Communications
053	Trammel Crow Residential
054	Museum of Flight
055	Renton School District
056	Congregation Ahaarei Tefilah Lubavitch (ERUV)
057	King County Fire District 20

6. Identification Codes by Organization (Renter)

Code	Organization
031	Adelphia Business Solutions
006	Alpac Corp.
007	American Music Co.
008	Atlantic Richfield Co.
010	Boeing
009	Broadstripe (formerly MDM and Summit)
011	Burlington Northern
013	Cascade Design
025	Cell Net
033	Children's Hospital
036	Cingular Wireless
021	Cinnabon/Restaurant Unlimited
040	City of Shoreline
012	Comcast (formerly Chambers Cable/AT&T)
004	Comcast (formerly TCI Cablevision/AT&T)
017	Comcast (formerly Teleport Comm. Group)
056	Congregation Ahaarei Tefilah Lubavitch (ERUV)
047	Crown Castle Solutions Corporation
041	CSS Communications
002	Dept. of Information Technology (DoIT)
014	Electric Light Wave
056	ERUV (Congregation Ahaarei Tefilah Lubavitch)
015	Fred Hutchinson Research Center
027	GTE Wireless
034	Huling Buick, Inc.
057	King County Fire District 20
037	King County Public Works
046	Marco Global Inc.
051	McKinstry Co.
028	Mehrer Drywall
054	Museum of Flight
049	NW School, The
024	Olympic Pipeline
052	OnFiber Communications
048	PolyClinic
050	Proscribe, Inc.
055	Renton School District
003	SDoT
042	SEA-MAR
001	Seattle City Light
026	Seattle Pacific University
035	Seattle Public Utilities SPU
020	Seattle University
040	Shoreline, City of
043	St. Therese Parish
038	Swedish Medical Center
045	The Bush School
049	The NW School
023	Time Warner Telecom
032	T-Mobile - Voicestream PCS III
053	Trammel Crow Residential
018	University of Washington
005	VerizonBusiness (formerly MCI and MFS)
019	WRQ Inc.
030	WSDOT
022	XO Comm. Inc. (formerly XO Wash and Nextlink)
039	Ygnition Networks
044	ZymoGenetics

7. References

C2-2007*; National Electrical Safety Code;* Institute of Electrical and Electronics Engineers, Inc. (IEEE); 2007 edition

Crume, Steve; SCL Joint Use Manager, subject matter expert (stephen.crume@seattle.gov)

D2-1; "Standard Spacing of Arms;" *Construction Guideline*; SCL

CELLULAR PHONE AND PERSONAL COMMUNICATIONS SERVICES (PCS) ANTENNA POLE ATTACHMENTS ABOVE PRIMARY CONDUCTORS

1. **Scope:** This document covers requirements for the installation of antenna structures, antenna feedlines, conduit risers and associated equipment on City Light distribution and wood transmission poles. See "Transmission System Installation Standard for City Light Transmission Towers and Poles" for the requirements for installations on steel transmission poles and towers.

   These antennas and appurtenances include but are not limited to those associated with cellular phone and wireless personal communications devices.

2. **Applications**
   - 2.1 Applications for the antenna and equipment installation shall be made to the City Light Real Estate Unit.
   - 2.2 Applications for electrical service for the installation shall be made to the City Light Commercial Service Representative for the area where the installation will be located.

3. **Serving Voltage**
   - 3.1 Where single phase service is required, the serving voltage will be 120/240 volts. 120/208 volt single phase three wire service will not be provided.
   - 3.2 Where three phase service is required, contact the City Light Commercial Service Representative.

4. **Codes and Permits**
   - 4.1 All necessary permits shall be obtained by the company owning the antenna. This includes but is not limited to, City of Seattle street use permits, land use and environmental permits.
   - 4.2 Installation must meet all applicable codes and City Light Construction Guidelines. In case of conflict the most stringent requirement will prevail.
   - 4.3 Electrical services associated with installation shall meet all applicable provisions of the latest revision of the National Electrical Code. In particular services with provision for alternative power sources shall be designed to eliminate any possibility of backfeed into the commercial power system.
   - 4.4 Federal Aviation Agency permits shall be obtained by the applicant for the antenna installation where required.

5. **Grounding and Bonding**
   - 5.1 All metallic parts of the installation on the pole shall be bonded together and grounded except that when a lightning rod is installed, the ground wire need not be permanently bonded to the other ground or neutral conductors on the pole. Crews may elect to bond the lightning rod ground conductor while working on the pole for safety reasons.
   - 5.2 A copper ground wire, #4 AWG minimum size, shall be installed from the base or feedline connection point of the antenna to a ground rod at the base of the pole. This ground wire shall be located on the same face of the pole and be adjacent to the antenna feedline conduit. The ground wire shall be permanently connected to the ground rod.
   - 5.3 Where a City Light neutral conductor exists, the ground wire shall be permanently bonded to the City Light neutral conductor at the neutral conductor level by City Light crews.
   - 5.4 A ground rod, 8 feet minimum in length, shall be installed (in addition to any existing City Light grounding electrodes) at the base of the pole. This installation shall meet or exceed the requirements of City Light Construction Guideline D16-2.

STANDARDS COORDINATOR	STANDARDS SUPERVISOR	UNIT DIRECTOR
Charles L. Shaffer	John C. Skinner	Gordon Jay

5.5 The ground wire shall be covered by a protective molding for its entire length on the pole except at the point where it must be exposed for bonding to the City Light neutral.

6. Conduit Risers

6.1 The maximum number of conduits allowed on the pole shall be:

A. Four 4 inch conduits for RF transmission lines. Alternatively, Four six inch conduits may be allowed upon special approval by the responsible Pole Engineer.

B. And a conduit 3 inches or smaller for electrical service to either the pole mounted box (shown in the illustrations on pages 4 through 7 of this guideline) or to the pad mounted equipment.

C. And a 2 inch or smaller conduit for telephone to the pad mounted equipment.

D. And the 2 inch PVC conduit for the ground wire(s) on wood transmission poles.

6.2 All conduits and/or feed lines shall be mounted on the face of the pole.

6.3 All conduits and/or feed lines over 2 inch nominal diameter shall be installed on standoff brackets. The minimum space between the pole and the closest part of the conduit shall be 4-1/2" (for climbing). The standoff bracket installation shall conform to Seattle City Light Construction Guideline U7-10. In particular, the support bracket with brace shown in Section 4 must be used as shown.

6.4 Conduits shall be gray electrical grade Schedule 40 or 80 PVC.

6.5 Conduits between 2 feet below the ground line to 8 feet above the ground line shall meet the requirements of Sections 6.3 and 6.4 above, however, code and/or permit conditions may require a thicker wall conduit or different material.

6.6 Polyethylene and CPVC conduits are not acceptable.

6.7 See City Light Construction Guideline U7-10 for installation requirements for conduit risers on poles.

7. Identification: Conduit risers shall be legibly and permanently marked with the operating company's name and emergency call number. This is to assist in repair of third party damage to the antenna facility.

8. Equipment Mounted on Pole

8.1 The number of installations and quantity of equipment and antennas will be limited to the space available on the existing or replaced pole. Antenna installations will not be allowed on primary corner poles, poles with transformers, capacitors, primary cable terminations, primary switches or primary metering. Only one antenna installation above the primary zone will be allowed on a pole although the antenna installation may consist of three or more antenna panels.

8.2 Only one wireless carrier may have equipment on any given pole.

8.3 No service entrance equipment, will be allowed on the pole.

8.4 Radio or other cabinets will be allowed on the pole only if they comply with the maximum size allowed by City Light Construction Guideline D2-1.3.

Note: The cabinet shown on the illustrations on pages 4 through 7 of this guideline are not necessarily used on every installation. For instance, some installations may use pad mount equipment.

8.5 Only one pole mounted box per pole will be allowed.

8.6 The above types of equipment may be pad mounted provided that no equipment is located nearer than ten feet from the pole.

8.7 A single antenna less than 2 feet in length may be mounted on the pole below the power system neutral. Alternatively, up to and including three antennas may be installed in this area provided that they are mounted on the radio cabinet. Clearances of 1 foot from the surface of the pole to the antenna element and 40 inches below power neutral or secondary conductors shall be maintained.

8.8 The antenna related box (if any) shall be mounted on the street side of the pole and shall be located high enough so that it will not be damaged by passing traffic – see City Light Construction Guideline D2-1.3.

8.9 Conduit running up to City Light secondary conductors or antenna cables running up to a box shall be on the face of the pole. All conduit running from the box to the antenna shall also be on the face of the pole.

9. Materials Provided by Antenna Owner: These materials shall meet or exceed City Light specifications where City Light specifications exist.

10. Aesthetics: Antenna installations shall be as aesthetically pleasing as is reasonably possible.

11. Legal Compliance
It shall be the responsibility of the applicant for the antenna installation to comply with all applicable requirements of the Land Use Codes, regulations and laws of the City of Seattle or of any jurisdiction in which the installation is located. This includes FAA height restrictions.

12. Damage Notification
The company owning the antenna installation shall provide Seattle City Light Real Estate Unit with a current phone number for assistance in the repair of storm or third party damage or City Light maintenance.

13. Community Notification and Disputes
The company owning the antenna installation shall provide Seattle City Light Real Estate Unit with a current phone number for referral of citizen inquiries.

14. Clearances

14.1 All antennas, excluding mounting bracket, shall have a minimum clearance of 7 feet 1 inch from all conductors energized between 2,400 volts and 121,000 volts.

14.2 All antennas, excluding mounting bracket, shall have a minimum clearance of 11 feet 1 inch from all conductors energized over 110,000 volts and less than 241,000 volts.

15. Installation and Maintenance: City Light crews will install and maintain all equipment, antennas and feed lines located at or above the level of the power neutral conductor on the pole at the applicant's expense.

Referenced Standards: City Light Construction Guidelines D2-1.1, D2-1.3, D2-3, D16-2 and U7-10.

Related Standards and Codes: City Light Construction Guideline D9-52

IEEE/ANSI C2 “National Electrical Safety Code”, 1997.

NFPA 70 “National Electrical Code”, 1999

Federal Aviation Regulations, Section 77, “Objects Affecting Navigable Airspace”

CELLULAR PHONE AND PERSONAL COMMUNICATIONS SERVICES (PCS) ANTENNA POLE ATTACHMENTS ABOVE PRIMARY CONDUCTORS

ON DISTRIBUTION POLE WITH UNDERGROUND SERVICE

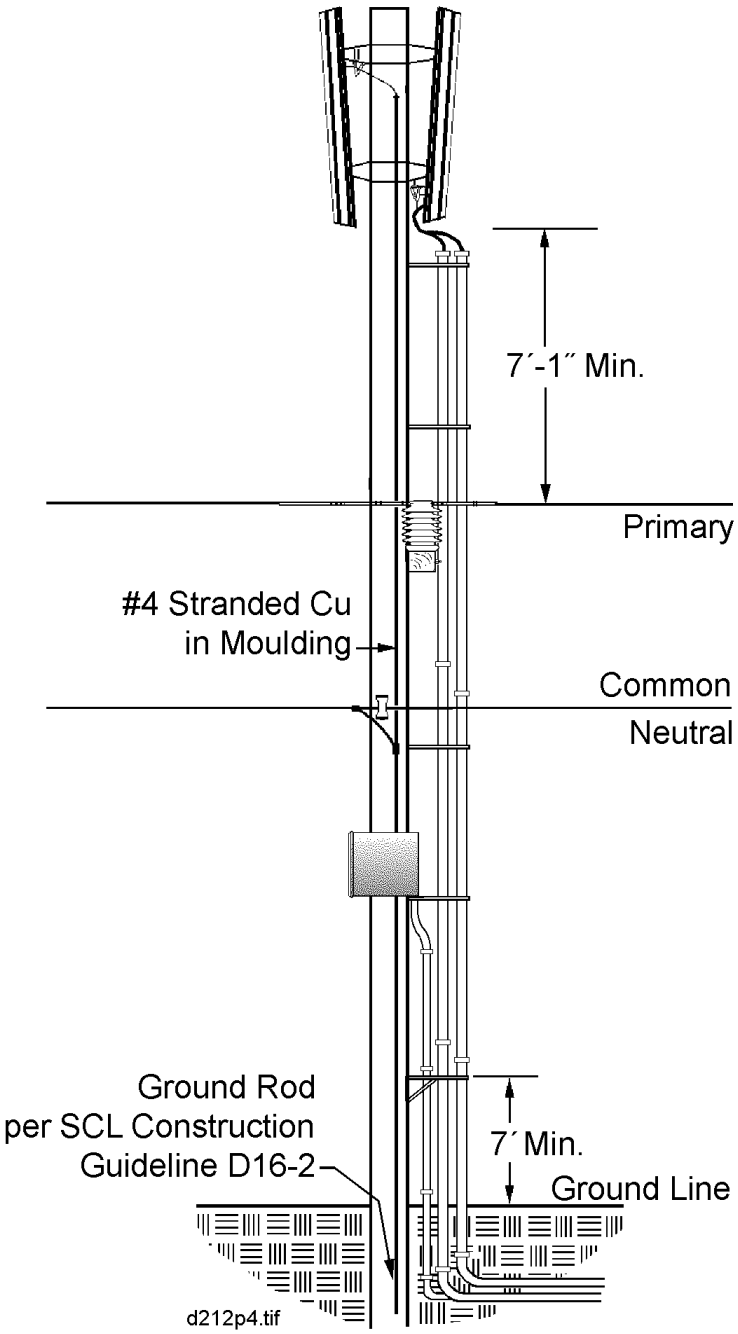

Not to Scale

CELLULAR PHONE AND PERSONAL COMMUNICATIONS SERVICES (PCS) ANTENNA POLE ATTACHMENTS ABOVE PRIMARY CONDUCTORS

ON DISTRIBUTION POLE WITH OVERHEAD SERVICE

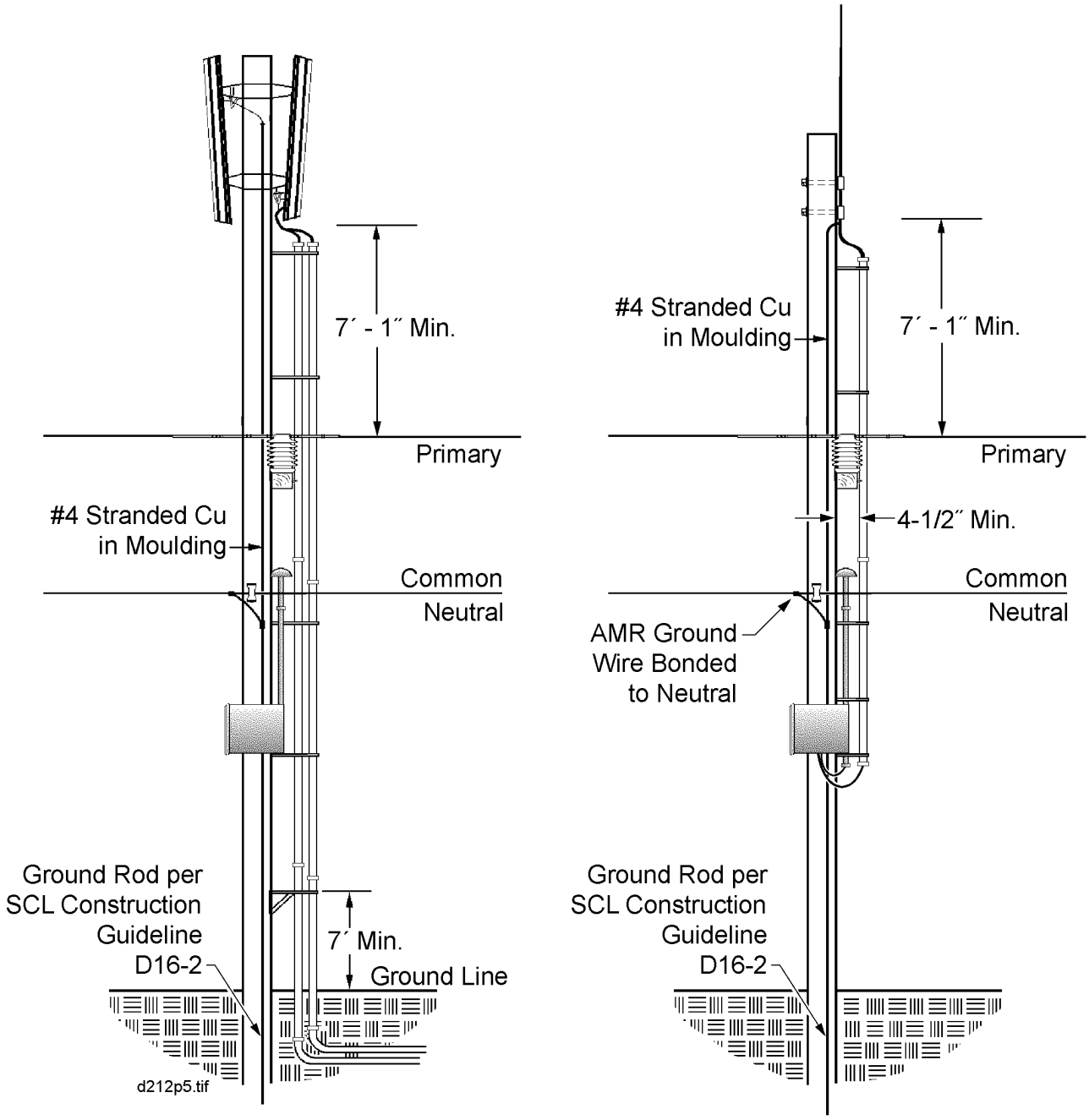

Not to scale

CELLULAR PHONE AND PERSONAL COMMUNICATIONS SERVICES (PCS) ANTENNA POLE ATTACHMENTS ABOVE PRIMARY CONDUCTORS

ON WOOD TRANSMISSION POLE WITH UNDERGROUND SERVICE

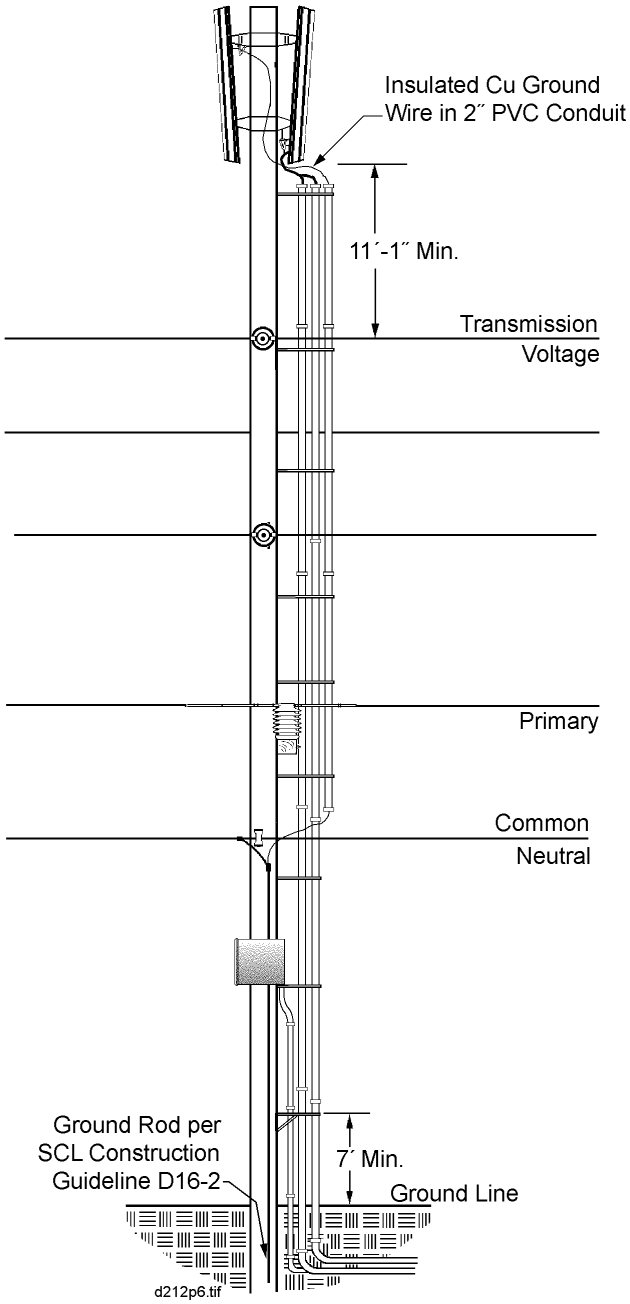

Not to Scale

CELLULAR PHONE AND PERSONAL COMMUNICATIONS SERVICES (PCS) ANTENNA POLE ATTACHMENTS ABOVE PRIMARY CONDUCTORS

ON WOOD TRANSMISSION POLE WITH OVERHEAD SERVICE

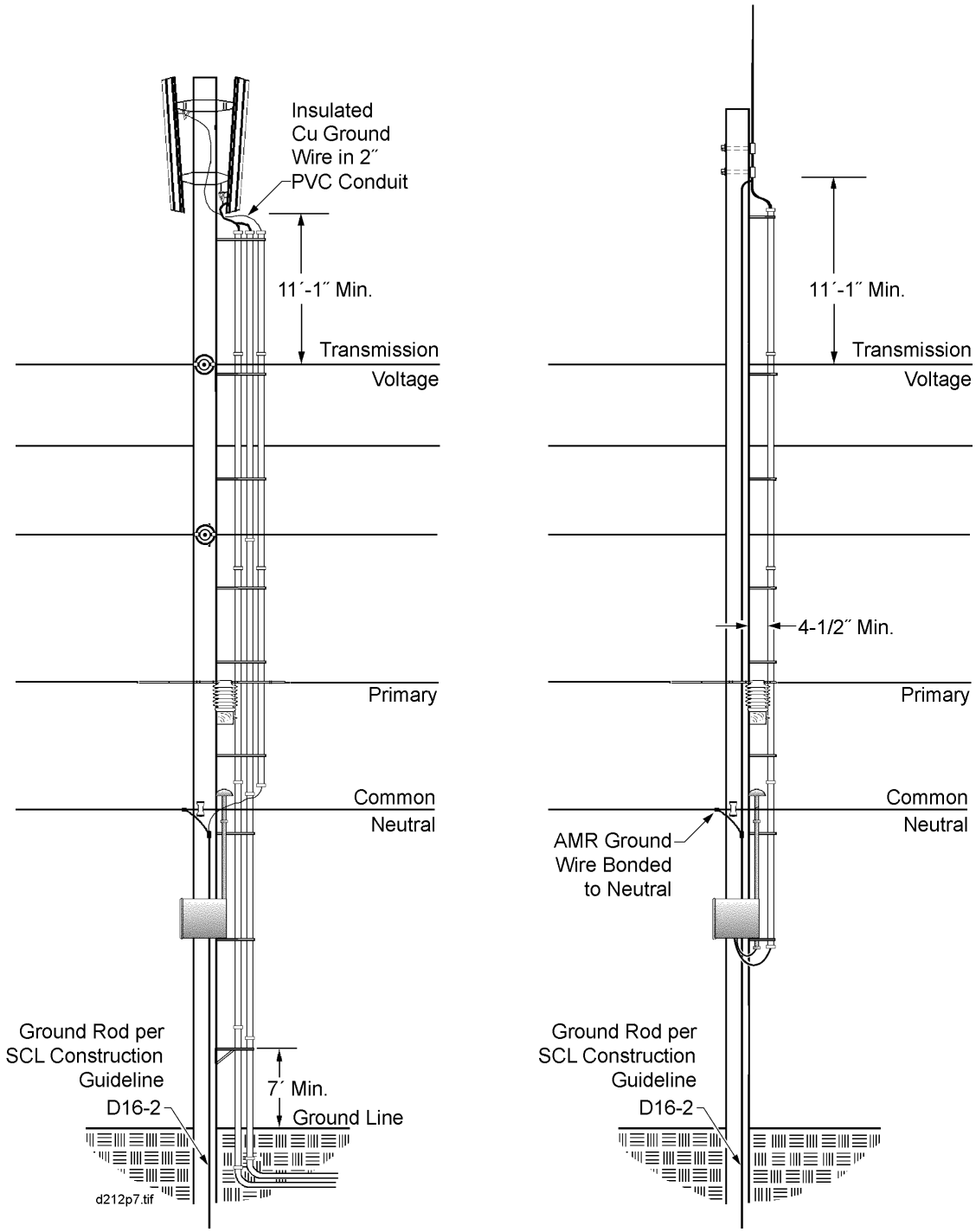

Not to Scale

CABLE TV POWER SUPPLY ATTACHMENTS

1. **Scope:** This document covers requirements for the installation of cable television power supplies and any other similar pole mounted device not owned by Seattle City Light, on City Light distribution poles.

2. **Codes and Permits**
   - 2.1 All necessary permits and franchises shall be obtained by the agency installing or owning the attachment. This includes but is not limited to, City of Seattle street use permits and environmentally related permits.
   - 2.2 Installation must meet all applicable codes and City Light Construction Guidelines. In case of conflict the most stringent requirement will prevail.

3. **Grounding and Bonding**
   - 3.1 All metallic parts of the power supply or device shall be grounded
   - 3.2 A copper ground wire, #4 AWG minimum size, shall be installed from the power supply or device to a ground rod at the base of the pole. This ground wire shall be located on the field side of the pole.
   - 3.3 Where a City Light neutral conductor exists, the ground wire shall be permanently bonded to the City Light neutral conductor at the neutral conductor level. The connection of the CATV provided bond wire to the City Light neutral shall be made by City Light crews.
   - 3.4 A ground rod, 8 feet minimum in length, shall be installed (in addition to any existing City Light grounding electrodes) at the base of the pole. This installation shall be in accordance with City Light Construction Guideline D16-2. The ground wire required in Section 3.2 above shall be permanently connected to this ground rod.
   - 3.5 The ground wire shall be covered by a protective molding for the first 8 feet above ground level.

4. **Clearances**
   - 4.1 15 feet 6 inches minimum above the ground.
   - 4.2 40 inches minimum below lowest City Light conductor.
   - 4.3 4-1/2 inches minimum between the power supply or other device and the pole.
   - 4.4 12 inches minimum below any communications attachment.

5. **Conduit Risers**
   - 5.1 The conduit(s) shall be installed on standoff brackets. The minimum space between the pole and the closest part of the conduit shall be 4-1/2 inches(for climbing). The standoff bracket installation shall conform to Seattle City Light Construction Guideline U7-10. In particular, the support bracket with brace shown in Section 4 must be used as shown. The standoff brackets used shall be City Light Stock No. 686796E or pre-approved equivalent. These brackets may be purchased from City Light Stores at 3613 4th Ave. South.
   - 5.2 Conduits shall be gray electrical grade Schedule 40 or 80 PVC or rigid steel. Polyethylene, CPVC, ABS, Electrical Metallic Tubing (EMT, “thinwall” conduit), and Intermediate Metallic Conduit (IMC) conduits are not acceptable.
   - 5.3 Conduits between 2 feet below the ground line to 8 feet above the ground line shall meet the requirements of Section 5.2 above, however, code and/or permit conditions may require a thicker wall conduit or different material.

STANDARDS COORDINATOR	STANDARDS SUPERVISOR	UNIT DIRECTOR
Charles L. Shaffer	John C. Thimmes	Hardie Jay

6. Location on Poles

6.1 Power supplies or other devices shall be mounted on the street side of the pole.

6.2 Conduit running up to City Light secondary conductors or CATV cables from power supplies or other devices shall also be on the street side of the pole. All conduit running down from power supplies or other devices shall be on the face of the pole.

7. Identification: Conduit risers shall be legibly and permanently marked with the operating company's name and emergency call number. This is to assist in repair of third party damage to the power supply or other device.

8. Interset Poles: City Light's policy is to not interset additional poles in the lead of the line to accommodate power supply or other installations.

9. Maximum Size: The maximum allowable size of power supplies or any other pole mounted device shall be 2 cubic feet in volume and the greatest dimension is 26 inches or less. Any exception to maximum dimensions must be pre-approved by City Light.

10. Community Notification and Disputes

10.1 It shall be the responsibility of the applicant for the installation of power supplies or other devices to give timely prior notification to property and business owners and residents in the area who will be affected by the installation.

10.2 It shall be the responsibility of the applicant for the installation of power supplies or other devices to resolve any and all complaints resulting from the installation including complaints relative to increased pole height or impaired view or visibility. The sole exception shall be complaints relating exclusively to City Light facilities.

Referenced Standards: City Light Construction Guideline D16-2, U7-10.

Related Standards and Codes: City Light Construction Guideline D2-1.1 and D2-3.

IEEE/ANSI C2 "National Electrical Safety Code", 1997.

NFPA 70 "National Electrical Code", 1999

Federal Aviation Regulations, Section 77, "Objects Affecting Navigable Airspace"

CABLE TV POWER SUPPLY ATTACHMENTS

Typical Pole Details, Not to Scale

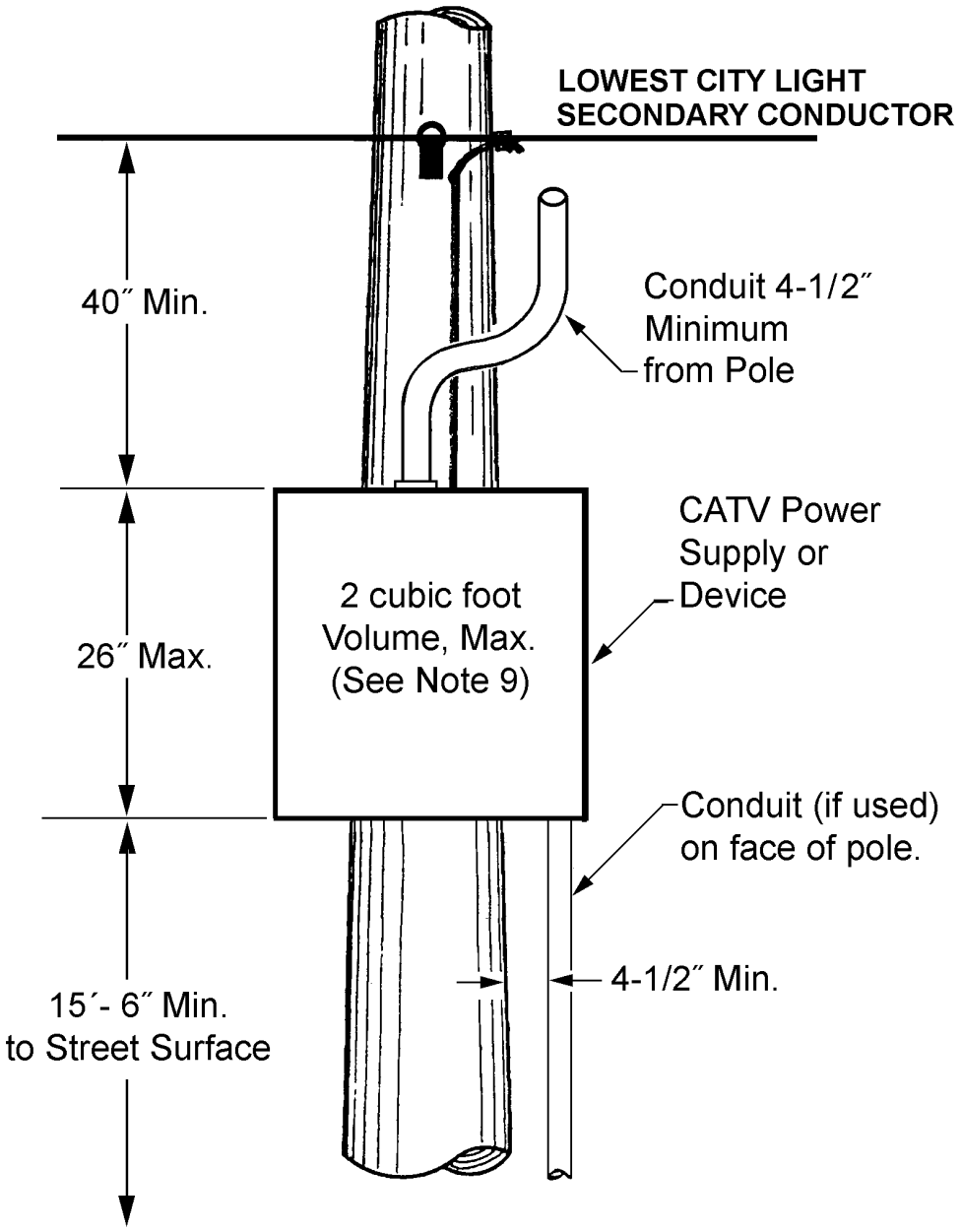

WIRE CROSSING CLEARANCES

The clearances given below apply for these conditions:

1. Temperature of 60° F, no wind, with the upper conductor at its final unloaded sag and the lower conductor at its initial unloaded sag.

2. Span lengths 250 feet or less for the upper conductor. Increase the clearance .015 feet for each foot of span length over 250 feet.

WIRES AT HIGHER ELEVATION (Feet)

WIRES CROSSED OVER	Guys	Service Drops to 750 Volts	Secondary to 750 V and Pri. Neut.	4 kV	26 kV	115 kV	230 kV
Telephone & TV Conductors & Messengers	2	2[a]	4	4[b]	6	9	14
Trolley Slide Wires	4	4	4	6	6	9	14
Service Drops & Guys	2	2	2	4	4	7	12
Secondary to 750 V	2	2	2	2	4	7	12
4 kV	4	4	4	2	4	7	12
26 kV	4	6	4	4	4	7	12
115 kV	7	9	7	7	7	10	15

NOTE: The National Electrical Safety Code (referenced below) may show lesser clearances than this guideline. However, no reduction in the clearances shown in the table above is recommended without a thorough review and approval by City Light engineer.

Reference Standards: NESC Rule 233, Table 233-1 (1997)

FOOTNOTES:

a. Service drops crossing under communication conductors require 4 feet clearance for open-wire services, 2 ft. clearance for grounded-messenger services.

b. This clearance shall be increased to 6 feet where the supply wires cross over a communication line within 6 feet horizontally of a communications pole or structure.

ORIGINATOR	STANDARDS COORDINATOR	STANDARDS SUPERVISOR	UNIT DIRECTOR
Jim S. Horn	Charles L. Shaffer	John C. Skinner	Betty Robin

CLEARANCES FROM STRUCTURES AND GROUND

Guideline Notes:

1. This guideline covers only clearances from structures/objects. For working clearances for qualified workers, see WAC 296-45. For working clearances for unqualified workers, see WAC 296-155-428 and WAC 296-24-960.
2. For transmission lines, in addition to the additional clearance required by NESC-2002 Rule 232C1, Seattle City Light requires designs to add an extra 2 feet for construction tolerances.
3. Seattle City Light overhead triplex and quadraplex conductors are governed by NESC rule 230C3.

Vertical Clearance of Wires, Conductors, and Cables Above Ground, Roadway, Rail, or Water Surfaces[25] (with final unloaded sag).

Voltages are phase to ground for effectively grounded circuits and those other circuits where all ground faults are cleared by promptly de-energizing the faulted section, both initially and following subsequent breaker operations. See the definitions section for voltages of other systems. See Rules 232B1, 232C1a, and 232D4.

References: NESC-2002, Table 232-1, Rule 232	**cables**	**triplex & quadruplex**	**supply**	**SCL nominal Ø-Ø system voltage: 4 kV, 26 kV, 34 kV**	**trolley and electrified railroad contact conductors and associated span or messenger wires**	
nature of surface underneath wires, conductors, or cables	insulated communication conductors and cable; messengers; surge-protection wires; grounded guys; ungrounded guys exposed to 0 to 300 V [11, 15]; neutral conductors meeting Rule 230E1; supply cables meeting Rule 230C1 ft.	non-insulated communication conductors; supply cables of 0 to 750 V meeting Rules 230C2 or 230C3 ft.	supply cables over 750 V meeting Rules 230C2 or 230C3; open supply guys exposed to over 300 V to 750 V[14] ft.	conductors, 0 over 750 V to 22 kV; ungrounded guys exposed to 750 V to 22 kV[14] ft.	0 to 750 V to ground ft.	over 750 V to 22 kV to ground ft.
where wires, conductors, or cables cross over or overhang						
1. Track rails of railroads (except electrified railroads using overhead trolley conductors)[2,16,22]	23.5	24.0	24.5	26.5	22.0[4]	22.0[4]
2. Roads, streets, and other areas subject to truck traffic[23]	15.5	16.0	16.5	18.5	18.0[5]	20.0[5]
3. Driveways, parking lots, and alleys[23]	15.5[7,13]	16.0[7,13]	16.5[7]	18.5	18.0[5]	20.0[5]
4. Other land traversed by vehicles, such as cultivated, grazing, forest, orchards, etc.[26]	15.5	16.0	16.5	18.5	–	–
5. Spaces and ways subject to pedestrians or restricted traffic only[9]	9.5	12.0[8]	12.5[8]	14.5	16.0	18.0

standards coordinator	*standards supervisor*	*unit director*
Chris Detter	John Barnett	Pamela S. Johnson

Vertical Clearance of Wires, Conductors, and Cables Above Ground, Roadway, Rail, or Water Surfaces[25] (with final unloaded sag).

References: *NESC-2002, Table 232-1, Rule 232* **nature of surface underneath wires, conductors, or cables**	**cables** insulated communication conductors and cable; messengers; surge-protection wires; grounded guys; ungrounded guys exposed to 0 to 300 V [11, 15]; neutral conductors meeting Rule 230E1; supply cables meeting Rule 230C1 ft.	**triplex & quadruplex** noninsulated communication conductors; supply cables of 0 to 750 V meeting Rules 230C2 or 230C3 ft.	**supply** supply cables over 750 V meeting Rules 230C2 or 230C3; open supply conductors, 0 to 750 V; ungrounded guys exposed to over 300 V to 750 V[14] ft.	**SCL nominal Ø-Ø system voltage: 4 kV, 26 kV, 34 kV** open supply conductors, over 750 V to 22 kV; ungrounded guys exposed to 750 V to 22 kV[14] ft.	**trolley and electrified railroad contact conductors and associated span or messenger wires** 0 to 750 V to ground ft.	over 750 V to 22 kV to ground ft.
Where wires, conductors, or cables cross over or overhang						
6. Water areas not suitable for sailboating or where sailboating is prohibited[21]	14.0	14.5	15.0	17.0	–	–
7. Water areas suitable for sailboating including lakes, ponds, reservoirs, tidal waters, rivers, streams, and canals with an unobstructed surface area of [17, 18, 19, 20, 21]						
a. Less than 20 acres	17.5	18.0	18.5	20.5	–	–
b. Over 20 to 200 acres	25.5	26.0	26.5	28.5	–	–
c. Over 200 to 2000 acres	31.5	32.0	32.5	34.5	–	–
d. Over 2000 acres	37.5	38.0	38.5	40.5	–	–
8. Established boat ramps and associated rigging areas; areas posted with sign(s) for rigging or launching sailboats	Clearance above ground shall be 5 ft greater than in 7 above, for the type of water areas served by the launching site					
Where wires, conductors, or cables run along and within the limits of highways or other road rights-of-way but do not overhang the roadway						
9. Roads, streets, or alleys	15.5[24]	16.0	16.5	18.5	18.0[5]	20.0[5]
10. Roads in rural districts where it is unlikely that vehicles will be crossing under the line	13.5[10, 12]	14.0[10]	14.5[10]	16.5	18.0[5]	20.0[5]

Notes for tables on pages 1 and 2

1 Where subways, tunnels, or bridges require it, less clearance above ground or rails than required by Table 232-1 may be used locally. The trolley and electrified railroad contact conductor should be graded very gradually from the regular construction down to the reduced elevation.

2 For wires, conductors, or cables crossing over mine, logging, and similar railways that handle only cars lower than standard freight cars, the clearance may be reduced by an amount equal to the difference in height between the highest loaded car handled and 20 ft, but the clearance shall not be reduced below that required for street crossings.

3 This footnote not used in this edition.

2 In communities where 21 ft has been established, this clearance may be continued if carefully maintained. The elevation of the contact conductor should be the same in the crossing and next adjacent spans. (See Rule 225D2 for conditions that must be met where uniform height above rail is impractical.)

5 In communities where 16 ft has been established for trolley and electrified railroad contact conductors 0 to 750 V to ground, or 18 ft for trolley and electrified railroad contact conductors exceeding 750 V, or where local conditions make it impractical to obtain the clearance given in the table, these reduced clearances may be used if carefully maintained.

6 This footnote not used in this edition.

7 Where the height of a building or other installation does not permit service drops to meet these values, the clearances over residential driveways only may be reduced to the following:

		(feet)
(a)	Insulated supply service drops limited to 300 V to ground	12.5
(b)	Insulated drip loops of supply service drops limited to 300 V to ground	10.5
(c)	Supply service drops limited to 150 V to ground and meeting Rules 230C1 or 230C3	12.0
(d)	Drip loops only of service drops limited to 150 V to ground and meeting Rules 230C1 or 230C3	10.0
(e)	Insulated communication service drops	11.5

8 Where the height of a building or other installation does not permit service drops to meet these values, the clearances may be reduced to the following:

		(feet)
(a)	Insulated supply service drops limited to 300 V to ground	10.5
(b)	Insulated drip loops of supply service drops limited to 300 V to ground	10.5
(c)	Supply service drops limited to 150 V to ground and meeting Rules 230C1 or 230C3	10.0
(d)	Drip loops only of supply service drops limited to 150 V to ground and meeting Rules 230C1or 230C3	10.0

9 Spaces and ways subject to pedestrians or restricted traffic only are those areas where riders on horses or other large animals, vehicles, or other mobile units exceeding a total height of 8 ft are prohibited by regulation or permanent terrain configurations, or are otherwise not normally encountered nor reasonably anticipated.

10 Where a supply or communication line along a road is located relative to fences, ditches. embankments, etc., so that the ground under the line would not be expected to be traveled except by pedestrians, the clearances may be reduced to the following values: (see top of next column)

		(feet)
(a)	Insulated communication conductor and communication cables.	9.5
(b)	Conductors of other communication circuits	9.5
(c)	Supply cables of any voltage meeting Rule 230C1, supply cables limited to 150 V to ground meeting Rules 230C2 or 230C3, and neutral conductors meeting Rule 230E1	9.5
(d)	Insulated supply conductors limited to 300 V to ground	12.5
(e)	Guys	9.5

11 No clearance from ground is required for anchor guys not crossing tracks, rails, streets, driveways, roads, or pathways.

12 This clearance may be reduced to 13 ft for communication conductors and guys.

13 Where this construction crosses over or runs along alleys, driveways. or parking lots not subject to truck traffic this clearance may be reduced to 15 ft.

14 Ungrounded guys and ungrounded portions of span guys between guy insulators shall have clearances based on the highest voltage to which they may be exposed due to a slack conductor or guy.

15 Anchor guys insulated in accordance with Rule 279 may have the same clearance as grounded guys.

16 Adjacent to tunnels and overhead bridges that restrict the height of loaded rail cars to less than 20 ft, these clearances may be reduced by the difference between the highest loaded rail car handled and 20 ft, if mutually agreed to by the parties at interest.

17 For controlled impoundments, the surface area and corresponding clearances shall be based upon the design high-water level.

18 For uncontrolled water flow areas, the surface area shall be that enclosed by its annual high-water mark. Clearances shall be based on the normal flood level; if available, the 10-year flood level may be assumed as the normal flood level.

19 The clearance over rivers, streams, and canals shall be based upon the largest surface area of any 1-mile-long segment that includes the crossing. The clearance over a canal, river, or stream normally used to provide access for sailboats to a larger body of water shall be the same as that required for the larger body of water.

20 Where an overwater obstruction restricts vessel height to less than the applicable reference height given in Table 232-3, the required clearance may be reduced by the difference between the reference height and the overwater obstruction height, except that the reduced clearance shall be not less than that required for the surface area on the line-crossing side of the obstruction.

21 Where the US Army Corps of Engineers, or the state, or surrogate thereof has issued a crossing permit, clearances of that permit shall govern.

22 See Rule 234I for the required horizontal and diagonal clearances to rail cars.

23 For the purpose of this Rule, trucks are defined as any vehicle exceeding 8 ft in height. Areas not subject to truck traffic are areas where truck traffic is not normally encountered nor reasonably anticipated.

24 Communication cables and conductors may have a clearance of 15 ft where poles are back of curbs or other deterrents to vehicular traffic.

25 The clearance values shown in this table are computed by adding the applicable Mechanical and Electrical (M & E) value of Table A-1 to the applicable Reference Component of Table A-2a of Appendix A.

26 When designing a line to accommodate oversized vehicles, these clearance values shall be increased by the difference between the known height of the oversized vehicle and 14 ft.

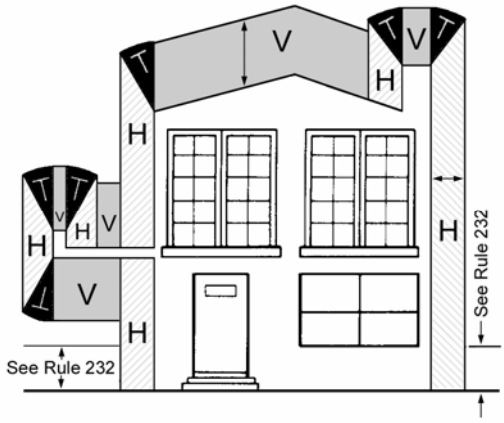

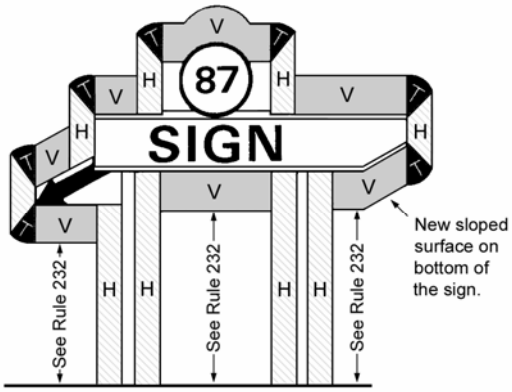

Legend

regions where conductors are prohibited		controlling clearance	control criteria
H		Horizontal	With wire, conductor, or cable displaced from the rest by a six-pound-per-square-foot wind force at final sag at 60° F.
V		Vertical	With final unloaded sag in the wire, conductor, or cable.
T	T	Transitional = Vertical (Arc)	

Reference: NESC-2002 Fig. 234-1

Clearance of Wires, Conductors, Cables, and Unguarded Rigid Live Parts Adjacent but Not Attached to Buildings and Other Installations Except Bridges [12]

Voltages are phase to ground for effectively grounded circuits and those other circuits where all ground faults are cleared by promptly de-energizing the faulted section, both initially and following subsequent breaker operations. See the definitions section for voltages of other systems. Clearances are with no wind displacement except where stated in the footnotes below. See Rules 234C1a, 234C2, and 234H4.

References: NESC-2002, Table 234-1, Rule 234		**Triplex & Quadru-plex**				**SSCL nominal Ø-Ø system voltage**	
	insulated communication conductors and cables; messengers; surge-protection wires; grounded guys; ungrounded guys exposed to 0 to 300 V [13]; neutral conductors meeting Rule 230E1; supply cables meeting Rule 230C1[5] ft.	**under 750 V plus**		**over 750 V plus**		Open supply conductors, over 750 V to 22 kV ft.	
clearance of		supply cables of 0 to 750 V meeting Rules 230C2 or 230C3 ft.	unguarded rigid live parts 0 to 750 V; non-insulated communication conductors; ungrounded equipment cases, 0 to 750V; ungrounded guys exposed to open supply conductors of over 300 V to 750 V[5] ft.	supply cables over 750 V meeting Rules 230C2 or 230C3; open supply conductors, 0 to 750 V ft.	unguarded rigid live parts, over 750 V to 22 kV; ungrounded equipment cases, 750 V to 22 kV; ungrounded guys exposed to over 750 V to 22 kV[5] ft.	4 kV	26 kV & 34 kV
1. Buildings							
a. Horizontal							
(1) To walls, projections, and guarded windows	4.5[1, 2, 7]	5.0[1, 2]	5.0[1, 2]	5.5[1, 2, 9]	7.0[1, 2]	7.5[1, 2,10,11]	10.0[10, 15]
(2) To unguarded windows[8]	4.5	5.0	5.0	5.5[9]	7.0	7.5[10, 11]	10.0[10, 15]
(3) To balconies and areas readily accessible to pedestrians[3]	4.5	5.0	5.0	5.5[9]	7.0	7.5[10, 11]	10.0[10, 15]
b. Vertical [14]							
(1) Over or under roofs or projections not readily accessible to pedestrians[3]	3.0	3.5	10.0	10.5	12.0	12.5	12.5
(2) Over or under balconies and roofs readily accessible to pedestrians[3]	10.5	11.0	11.0	11.5	13.0	13.5	13.5
(3) Over roofs accessible to vehicles but not subject to truck traffic[6]	10.5	11.0	11.0	11.5	13.0	13.5	13.5
(4) Over roofs accessible to truck traffic[6]	15.5	16.0	16.0	16.5	18.0	18.5	18.5
2. Signs, chimneys, billboards, radio and television antennas, tanks, and other installations not classified as buildings or bridges							
a. Horizontal [4]							
(1) To portions that are readily accessible to pedestrians[3]	4.5	5.0	5.0[1, 2]	5.5[9]	7.0[1, 2]	7.5[10,11]	10.0[10, 15]
(2) To portions that are not readily accessible to pedestrians[3]	3.0	3.5	5.0[1, 2]	5.5[1, 2, 9]	7.0[1, 2]	7.5[1, 2, 10, 11]	10.0[10, 15]
b. Vertical							
(1) Over or under catwalks and other surfaces upon which personnel walk	10.5	11.0	11.0	11.5	13.0	13.5	13.5
(2) Over or under other portions of such installations[4]	3.0	3.5	5.5	6.0[1]	7.5	8.0	10.0[15]

Notes for table on page 5

1 Where building, sign, chimney, antenna, tank, or other installation does not require maintenance such as painting, washing, changing of sign letters, or other operations that would require persons to work or pass between wires, conductors, cables or unguarded rigid live parts and structure, the clearance may be reduced by 2 ft.

2 Where available space will not permit this value, the clearance may be reduced by 2 ft provided the wires, conductors, or cables, including splices and taps, and unguarded rigid live parts have a covering that provides sufficient dielectric strength to limit the likelihood of a short circuit in case of momentary contact with a structure or building.

3 A roof, balcony, or area is considered readily accessible to pedestrians if it can be casually accessed through a doorway, ramp, window, stairway, or permanently mounted ladder by a person on foot who neither exerts extraordinary physical effort nor employs special tools or devices to gain entry. A permanently mounted ladder is not considered a means of access if its bottom is 8 ft or more from the ground or other permanently installed accessible surface.

4 The required clearances shall be to the closest approach of motorized signs or moving portions of installations covered by Rule 234C.

5 Ungrounded guys and ungrounded portion of guys between guy insulators shall have clearances based on the highest voltage to which they may be exposed to a slack conductor or guy.

6 For the purpose of this rule, trucks are defined as any vehicle exceeding 8 ft in height.

7 This clearance may be reduced to 3 in for the grounded portions of guys.

8 Windows not designed to open may have the clearances permitted for walls and projections.

9 The clearance at rest shall be not less than the value shown in this table. Also, when the conductor or cable is displaced by wind, the clearance shall be not less than 3.5 ft; see Rule 234C1b.

10 The clearance at rest shall be not less than the value shown in this table. Also, when the conductor or cable is displaced by wind, the clearance shall be not less than 4.5 ft; see Rule 234C1b.

11 Where available space will not permit this value, the clearance may be reduced to 7.0 ft for conductors limited to 8.7 kV to ground.

12 The clearance values shown in this table are computed by adding the applicable Mechanical and Electrical (M & E) value of Table A-1 to the applicable Reference Component of Table A-2b of Appendix A.

13 The anchor end of guys insulated in accordance with Rule 279 may have the same clearance as grounded guys.

14 For clearances above railings, walls, or parapets around balconies or roofs, use the clearances required for row 1b (1). For such clearances where an outside stairway exists, use the clearances required for row 2b (2).

15 Seattle City Light policy is that the clearance shall be 10 feet.

Clearance of Wires, Conductors, Cables, and Unguarded Rigid Live Parts from Bridges

Voltages are phase to ground for effectively grounded circuits and those other circuits where all ground faults are cleared by promptly de-energizing the faulted section, both initially and following subsequent breaker operations. See the definitions section for voltages of other systems. Clearances are with no wind displacement except where stated in the footnotes below. See Rules 234D1a and 234H4.

References: NESC-2002, Table 234-2, Rule 234	**triplex & quadruplex**		**unguarded or ungrounded plus**	**SCL nominal Ø-Ø system voltage**	
	unguarded rigid live parts 0 to 750 V; non-insulated communication conductors; supply cables of 0 to 750 V meeting Rules 230C2 or 230C3[7]	**supply**	unguarded rigid live parts, over 750 V to 22 kV; ungrounded equipment cases, 750 V to 22 kV; ungrounded guys exposed to open supply conductors of over 750 V to 22 kV [4] ft.	open supply conductors, over 750 V to 22 kV	
clearance	ungrounded equipment cases, 0 to 750V; ungrounded guys exposed to open supply conductors over 300 V to 750 V [4] ft.	supply cables over 750 V meeting Rules 230C2 or 230C3[7], open supply conductors, 0 to 750 V ft.		4 kV ft.	26 kV & 34 kV ft.
1. over bridges [1]					
a. Attached [3]	3.0	3.5	5.0	5.5	10.0[10]
b. Not attached	10.0	10.5	12.0	12.5	12.5
2. beside, under, or within bridge structure [6]					
a. Readily accessible portions of any bridge including wing, walls, and bridge attachments [1]					
(1) Attached [3]	3.0	3.5[8]	5.0	5.5[9]	10.0[9, 10]
(2) Not attached	5.0	5.5[8]	7.0	7.5[9]	10.0[9,10]
b. Ordinarily inaccessible portions of bridges (other than brick, concrete, or masonry) and from abutments [2]					
(1) Attached [3, 5]	3.0	3.5[8]	5.0	5.5[9]	10.0[9, 10]
(2) Not attached [4, 5]	4.0	4.5[8]	6.0	6.5[9]	10.0[9,10]

1 Where over traveled ways on or near bridges, the clearances of Rule 232 apply also.

2 Bridge seats of steel bridges carried on masonry, brick, or concrete abutments that require frequent access for inspection shall be considered as readily accessible portions.

3 Clearance from supply conductors to supporting arms and brackets attached to bridges shall be the same as specified in Table 235-6 (Rule 235E1) if the supporting arms and brackets are owned, operated, or maintained by the same utility

4 Ungrounded guys and ungrounded portions of guys between guy insulators shall have clearances based on the highest voltage to which they may be exposed due to a slack conductor or guy.

5 Where conductors passing under bridges are adequately guarded against contact by unauthorized persons and can be de-energized and grounded per Rule 444D for maintenance of the bridge, clearances of the conductors from the bridge, at any point, may have the clearances specified in Table 235-6 for clearance from surfaces of support arms plus one-half the final unloaded sag of the conductor at that point.

6 Where the bridge has moving parts, such as a lift bridge, the required clearances shall be maintained throughout the full range of movement of the bridge or any attachment thereto.

7 Where permitted by the bridge owner, supply cables may be run in rigid conduit attached directly to the bridge. Refer to Part 3 for installation rules.

8 The clearance at rest shall be not less than the value shown in this table. Also, when the conductor or cable is displaced by wind, the clearance shall be not less than 3.5 ft; see Rule 234D1b.

9 The clearance at rest shall be not less than the value shown in this table. Also, when the conductor or cable is displaced by wind, the clearance shall be not less than 4.5 ft; see Rule 234D1b.

10 Seattle City Light policy is that the clearance shall be 10 feet.

Clearances - State Highways

The vertical clearance for overhead power and communication lines above the highway and the lateral and vertical clearance from bridges shall conform with the National Electrical Safety Code and/or with the clearances as shown below, whichever is greater.

Reference: WAC 468-34-290 (Wash. DOT - Utility Lines - Franchises and Permits)

type of utility line	vertical clearance	
	lines crossing roadways, ft.	longitudinal, ft.
Communications and Cable Television	24	20
Communications and/or Cable Television Joint Usage with Electrical	20	20

Reference: WAC 468-34-290 (Wash. DOT - Utility Lines - Franchises and Permits)

electrical phase-to-ground voltage	SCL nominal Ø-Ø system voltage	vertical clearance	
		lines crossing roadways, ft.	longitudinal, ft.
0 - 750 volts	–	24	24
751 - 15,000 volts	4 kV	30	27
15,001 - 50,000 volts	26 kV & 34kV	32	32
50,001 volts and over	–	34	32

Notes for State highway clearances

1 The minimum height of highway crossings shall be measured from the point of the roadway directly under the crossing.

2 The minimum height of longitudinal lines shall be measured from ground line.

3 All clearances shall be at State Electrical Construction Code temperature and loading standards, and comply with all other requirements of this code.

Definition of terms

Reference: WAC 468-34-110

Unless otherwise stated, words and phrases used herein shall have the following meaning:

1 Highway - A general term denoting a street, road or public way for purposes of vehicular travel, including the entire area within the right of way.

2 Roadway - The portion of a highway including shoulders, for vehicular use. A divided highway has two or more roadways.

3 SCL – Seattle City Light

POLE SETTING DEPTH
26.4 KV LOOPED RADIAL SYSTEM

1. Scope

This construction guideline provides the minimum set depth for wood poles.

2. Application

This document is used by SCL crews and contractors to set poles to the required depth, providing the necessary holding power of the soil for the given length of pole.

3. Notes:

3.1 The brand on City Light poles is 12′ 6″ from the pole base. The butt gain is 12′ 0″ from the pole base.

3.2 The brand on telephone company poles is 10′ 0″ from the pole base.

3.3 For western redcedar poles, do not cover the preservative treated area of the pole butt. The treated area should extend 12″ above normal ground line. Note: Douglas-fir poles treated along the entire length.

3.4 Trim pole wrap (liner) 6″ to 12″ above normal ground line.

3.5 When tall poles are replaced with shorter poles, the proper setting depth must be obtained by the partial backfilling of the old hole.

4. References:

5072.0, “Poles, Butt-Treated Western Red Cedar”; *Material Standards*; SCL

5082.0, “Poles, Pressure-Treated, Douglas Fir”; *Material Standards*; SCL

Length of Pole, ft	Minimum Set Depth in Earth, ft	Minimum Set Depth in Rock, ft
20	5.0	3.0
25	5.0	3.0
30	5.5	3.5
35	6.0	4.0
40	6.0	4.0
50	7.0	4.5
55	7.0	5.0
60	7.5	5.0
65	8.0	6.0
70	8.0	6.0
75	8.5	6.0
80	9.0	6.5
85	9.0	6.5
90	9.5	7.0
95	10.0	7.5

standards coordinator	*standards supervisor*	*unit director*
Uzma Siddiqi	John Shipek	Pam S. Johnson

WOOD GUARD POST INSTALLATION

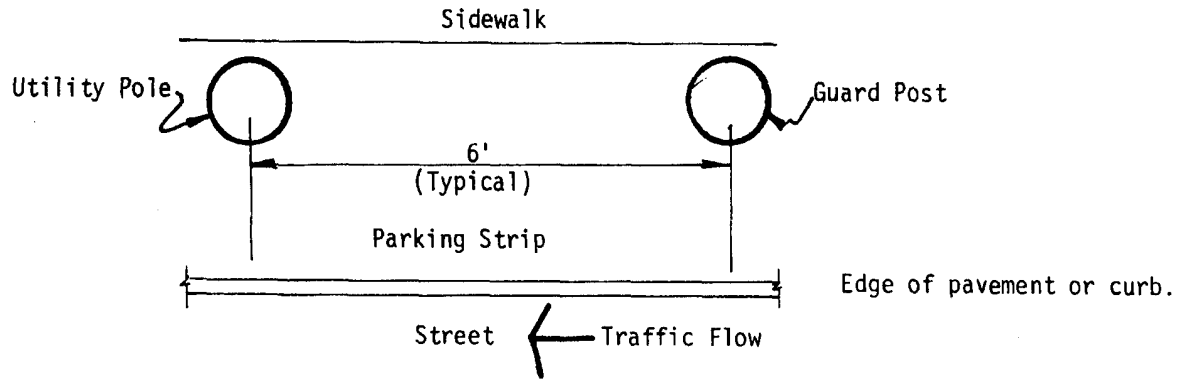

Notes:
1) Diameter of guard post not to exceed that of pole at ground line.
2) Guard post to be set back from curb or edge of pavement no less than minimum required for utility poles at same location.

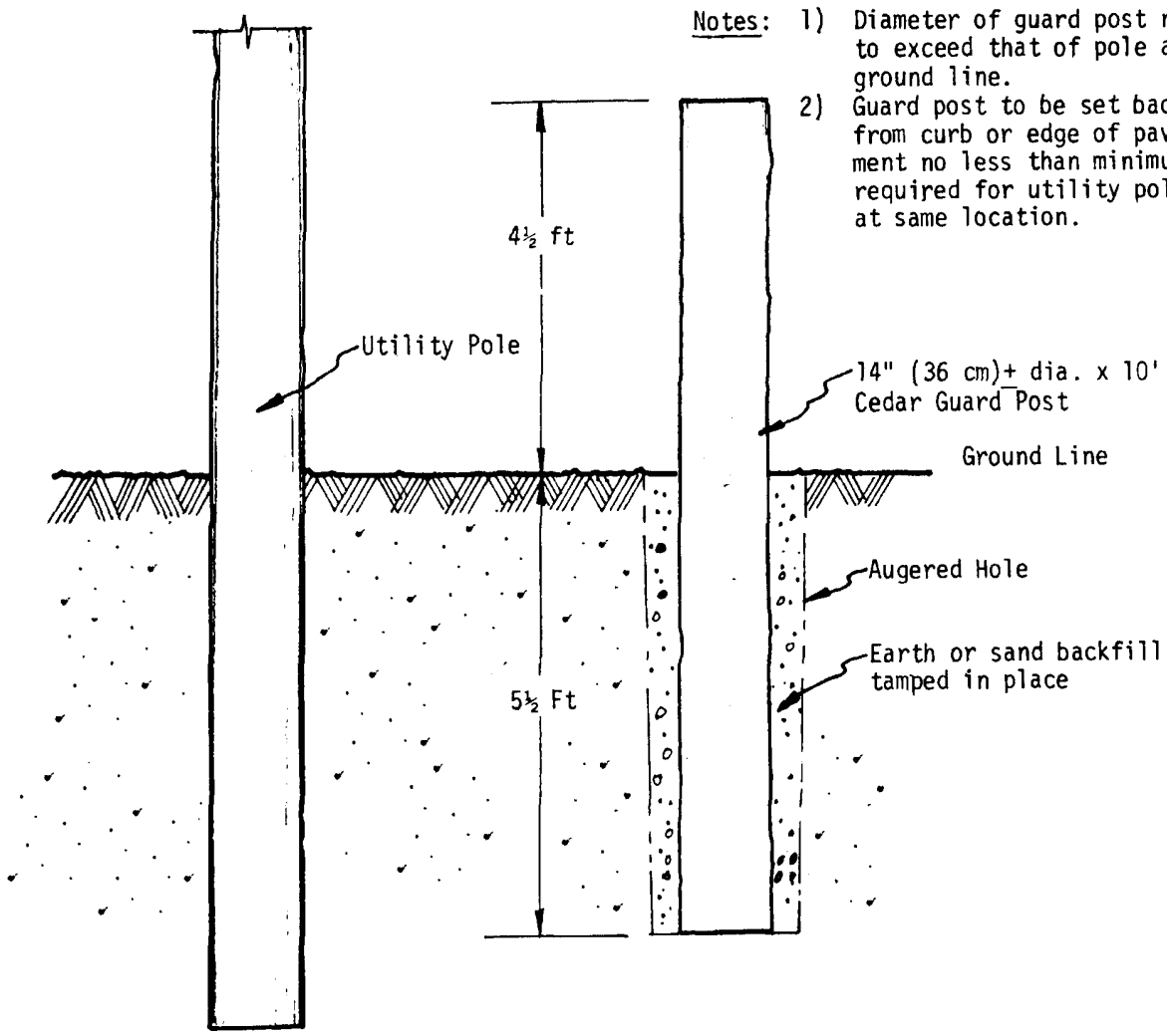

ORIGINATOR	STANDARDS COORDINATOR	STANDARDS SUPERVISOR	UNIT DIRECTOR
Jim S. Horn	Charles L. Shaffer	John C. Skinner	Betty Robin

STANDARD CROSSARMS

Crossarms, dimensions in inches
Chamfer all edges: top radius 3/8 ± 1/8 , bottom, 1/8 ± 1/16 .
Pin holes all 13/16 inches.

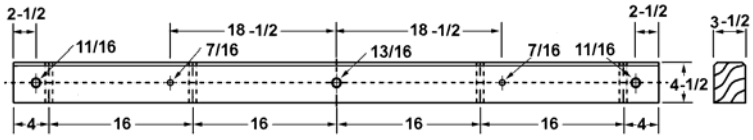

Primary Arm, 6 Foot, 4 Pin (540205)

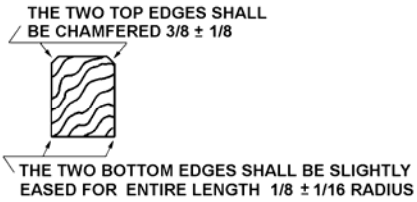

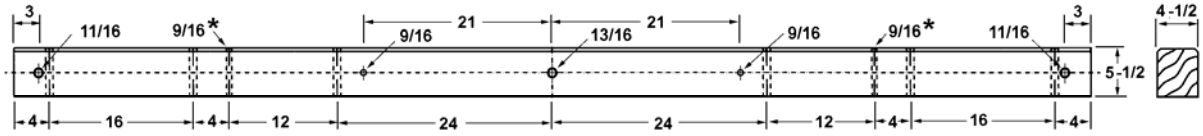

Primary Feeder Arm, 10 Foot, 6 Pin (540146)

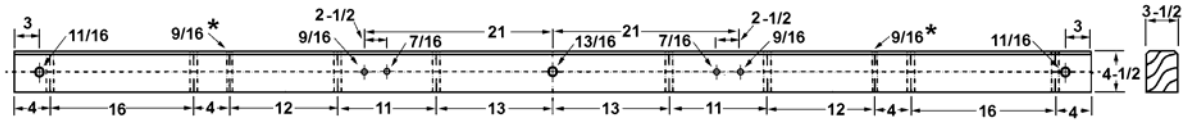

26 kV Arm, 10 Foot, 8 Pin (540220)

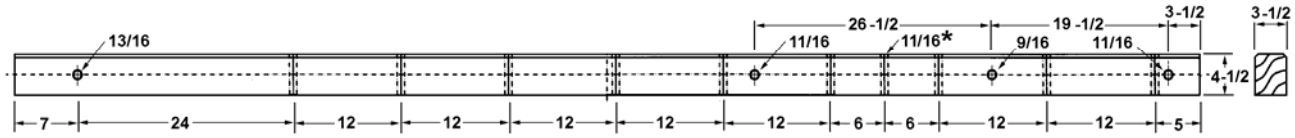

Wing Arm, 11 Foot, 9 Pin (540209)

* bracket bolt hole

Reference: Seattle City Light Material Standard 5400.00

Stock Number	Pins	Arm Type	Dimensions Width, in.	Height, in.	Length, ft.
540205	4-pin	primary	3-1/2	4-1/2	6
540146	6-pin	primary feeder	4-1/2	5-1/2	10
540220	8-pin	26kV	3-1/2	4-1/2	10
540209	9-pin	wing	3-1/2	4-1/2	11

STANDARDS COORDINATOR	STANDARDS SUPERVISOR	UNIT DIRECTOR
John Shipek	John Barnett	Hardev Juj

BRACES

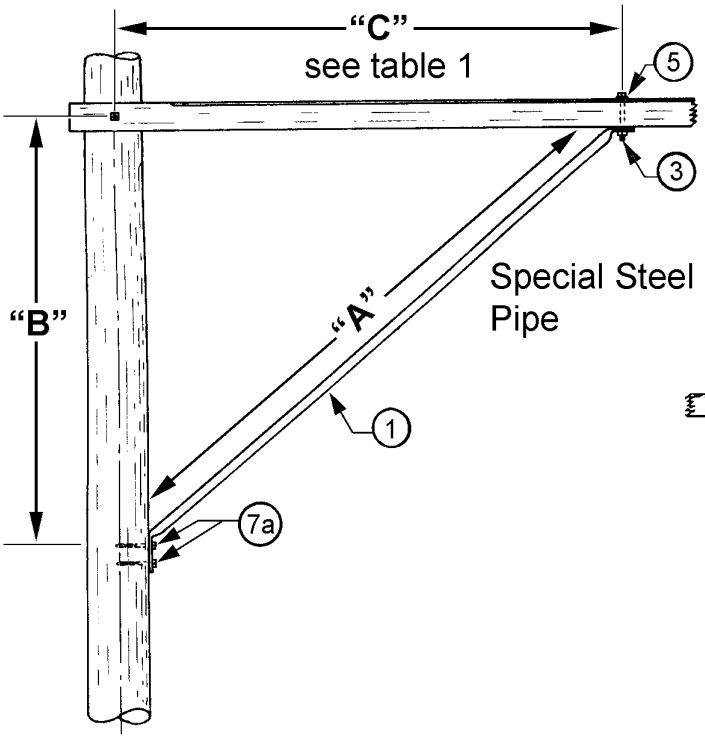

Table 1, Steel Pipe

A	B	C
9´-1″	5´-0″	7´-6″
12´-0″	7´-0″	9´-9″

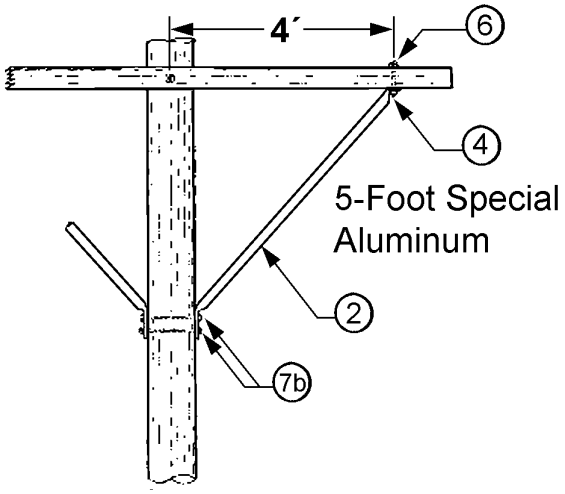

Note: For 14´ or 16´ wing, use 1-1/2″ x 12´ galvanized steel pipe or 2″ x 12´ aluminum pipe.

Table 2, Material List

Item	Quantity	Description	Size	Stock No.
1	1	Brace, Galvanized Steel Pipe	1-1/4″ x 9´-1″	563015
			1-1/4″ x 12´-0″	012504
2	2	Brace, Aluminum	1-1/2″ x 5´-0″	563013
3	1	Bolt, Galvanized Machine	5/8″ x 7″	780838E
4	2	Bolt, Galvanized Machine	1/2″ x 7″	780808E
5	1	Washer, Galvanized Cut	5/8″	585030E
6	2	Washer, Galvanized Cut	1/2″	585025E
7a	2	Screw, Galvanized Lag	1/2″ x 6″	785265E
7b	4	Screw, Galvanized Lag	1/2″ x 6″	785265E

STANDARDS COORDINATOR	STANDARDS SUPERVISOR	UNIT DIRECTOR
Charles L. Shaffer	John G. Chinn	Gordon Jay

GUYING AND ANCHORING

GUYING AND BRACING

When the loads to be imposed on supporting structures are greater than can be safely supported by the structures alone, additional strength shall be provided by the use of guys, braces, or other suitable construction. Such measures shall also be used where necessary to prevent undue increase of sags in adjacent spans as well as to provide sufficient strength for those supports on which the loads are considerably unbalanced, for example, at corners, angles, dead ends, large differences in span lengths, and changes of grade of construction.

Guys shall be installed prior to stringing conductors, but shall not be tightened excessively to the point where the poles are pulled out of line. Following the stringing, they shall be checked and, if necessary, adjusted to hold the pole in the plumb position. The number and size of guys required at a particular structure will depend on: the total conductor tension for all wires, the anchor lead, the deflection angle in the line and the pole height. Charts have been included which specify the number of guys required and the recommended distance from anchor to pole for various conditions. Where a joint use distribution and communication circuit is being built, the anchoring requirements of each circuit should be considered and combined where possible.

POINT OF ATTACHMENT

The guy or brace should be attached to the structure as near as is practical to the center of the conductor load to be sustained. However, on lines exceeding 8.7 kilovolts the location of the guy or brace may be adjusted to minimize the reduction of the insulation offered by nonmetallic support arms and supporting structures.

GUY FASTENINGS

Guys having an ultimate strength of 20,000 lbs. or more and subject to small radius bends should be stranded and should be protected by suitable guy thimbles or their equivalent.

GUY INSULATORS

Properties of Guy Insulators:

1. Material: Insulators shall be made of wet process porcelain, glass fiber reinforced plastic or other material of suitable mechanical and electrical properties.
2. Electrical Strength: The guy insulator shall have a rated dry flashover voltage at least double the nominal line voltage and a rated wet flashover voltage at least as high as the nominal line voltage between conductors of the guyed circuit. A guy insulator may consist of one or more units.
3. Mechanical Strength: The rated ultimate strength of the guy insulator shall be at least equal to the rated breaking strength of the guy in which it is installed.
4. Guy Grounding: If required the minimum ground wire size shall be #8 AWG copper wire.

Insulators shall be installed as follows:

1. All insulators shall be installed at least 8 ft. above the ground.
2. Where hazard would exist with one insulator, two or more guy insulators shall be placed so as to include, in so far as is practical, the exposed section of the guy between them.
3. Insulators shall be so placed that in case any guy sags down upon another, the insulators will not become ineffective.

GUY MARKERS

The ground end of anchor guys, exposed to pedestrian traffic, shall be provided with a substantial and conspicuous marker not less than 8 ft. long.

NOTE: Visibility of markers can be improved by the use of color or color patterns which provide contrast with the surroundings.

ANCHOR RODS

1. Anchor rods should be installed so as to be in line with the pull of the attached guy when under load.

   EXCEPTION: This is not required for anchor rods installed in rock or concrete.
2. The anchor rod assembly shall have an ultimate strength not less than that of the guy.

ORIGINATOR	STANDARDS COORDINATOR	STANDARDS SUPERVISOR	UNIT DIRECTOR
Jim S. Horn	Charles L. Shaffer	[illegible]	[illegible]

STATEMENT OF PRINCIPLE

Guy wires used to support distribution or transmission circuits and associated equipment, i.e. transformers, underground terminations, switching apparatus, shall be sectionalized with appropriate voltage class guy insulators.

The arc projection (location) of the guy insulators shall assure that in the case of a broken guy wire adjacent circuits or equipment on the same supporting structure are isolated from each other. This basic philosophy can be extended to meet unusual field conditions.

The following figures typify guying construction. Down guy tensioning charts for 10M and 20M guy wire for various anchor locations are included for quick reference.

BROKEN GUY CRITERIA

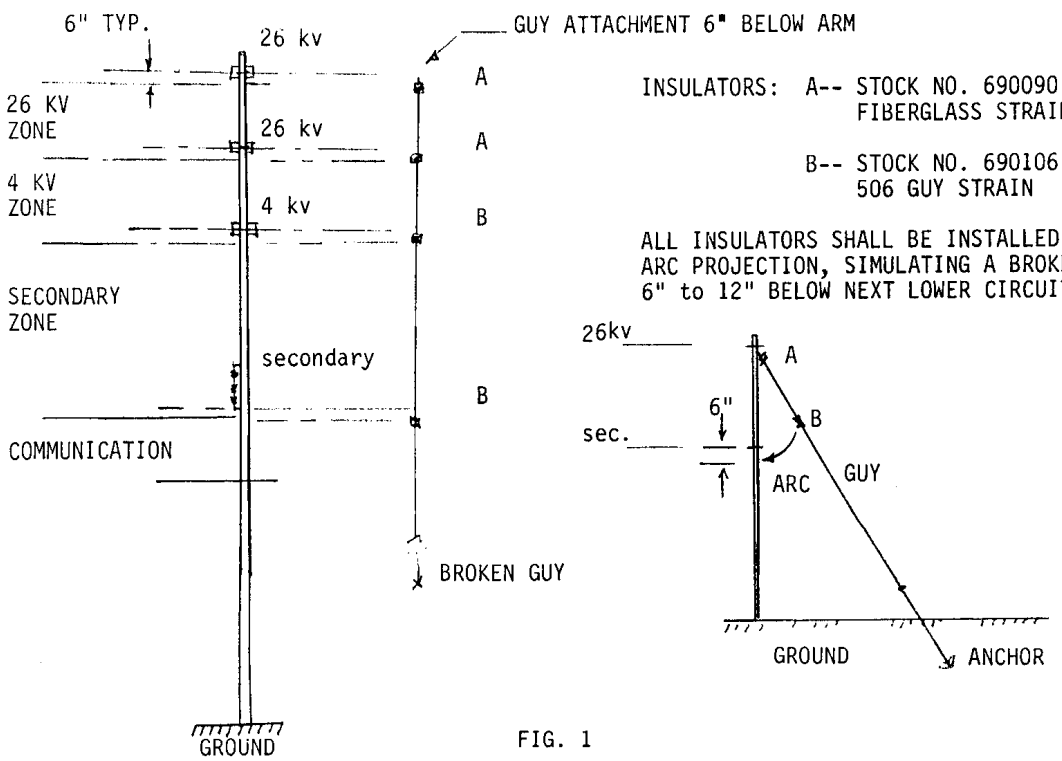

INSULATORS: A-- STOCK NO. 690090,92,94
FIBERGLASS STRAIN MIN.12"

B-- STOCK NO. 690106
506 GUY STRAIN

ALL INSULATORS SHALL BE INSTALLED SO THAT THE ARC PROJECTION, SIMULATING A BROKEN GUY, IS 6" to 12" BELOW NEXT LOWER CIRCUIT OR EQUIPMENT.

FIG. 1

GUY ATTACHMENT LOCATIONS

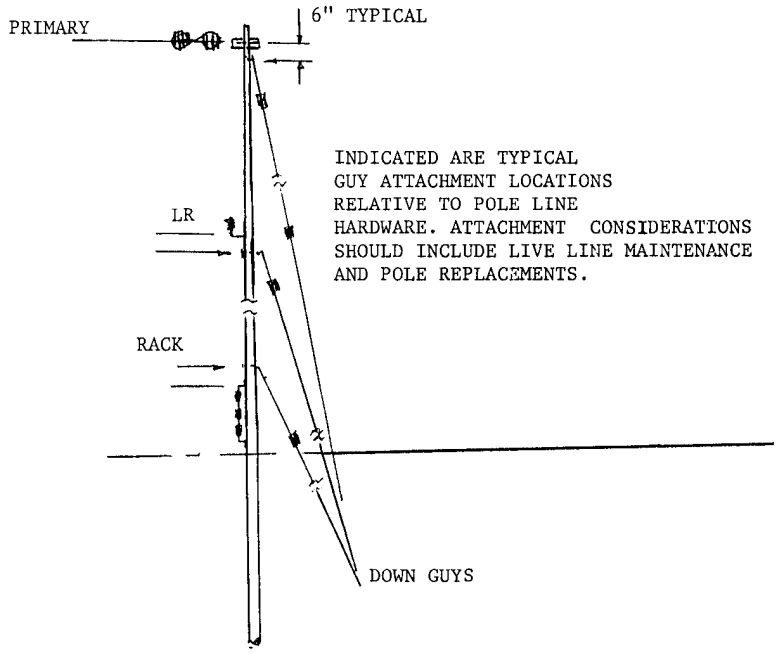

FIG. 2

GUYING AROUND EQUIPMENT

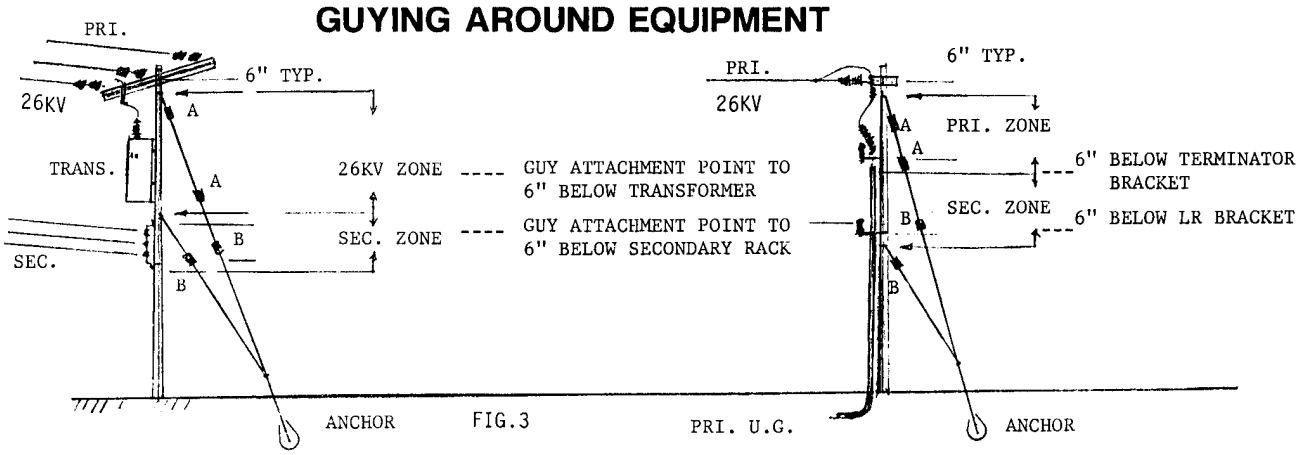

FIG.3

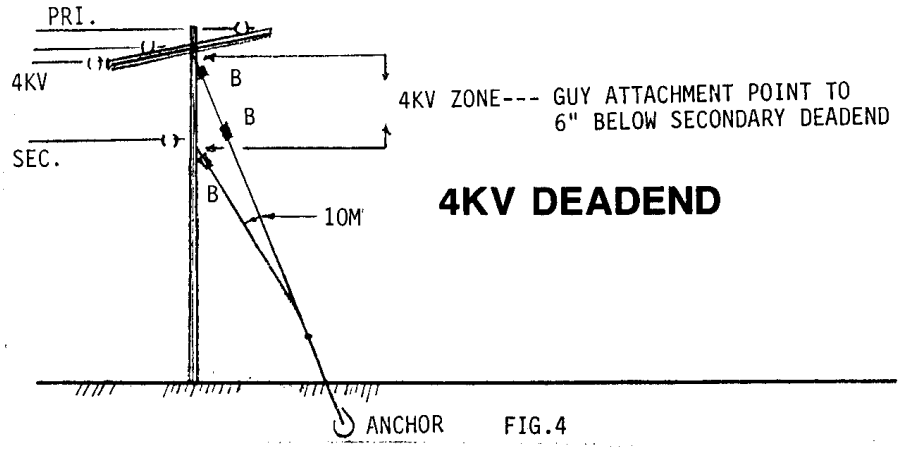

4KV DEADEND

FIG.4

ANGLE GUYING

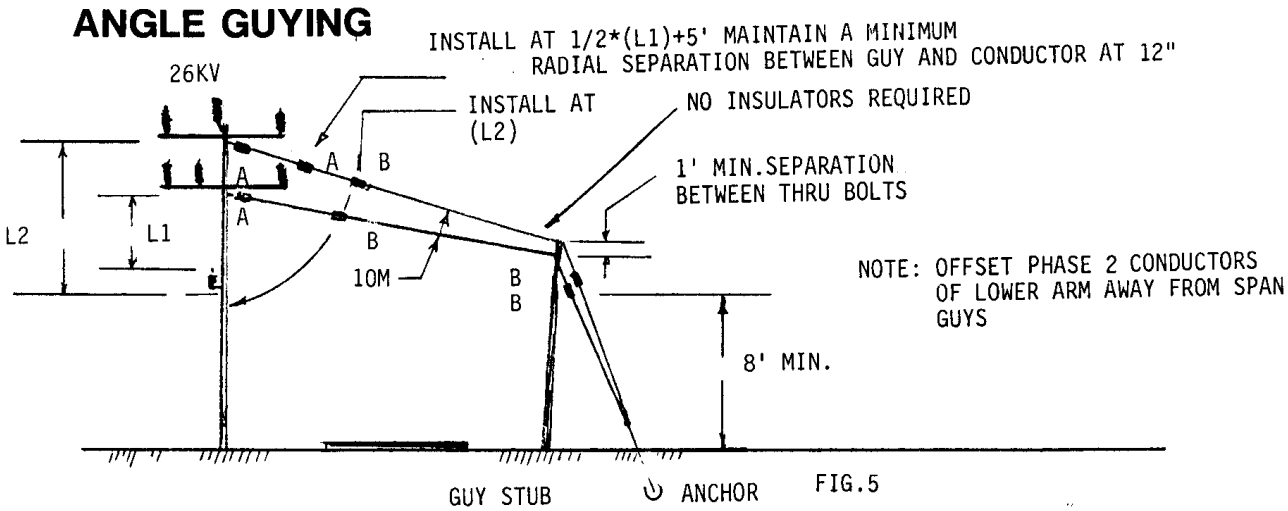

FIG.5

954 GUYING OPTIONS

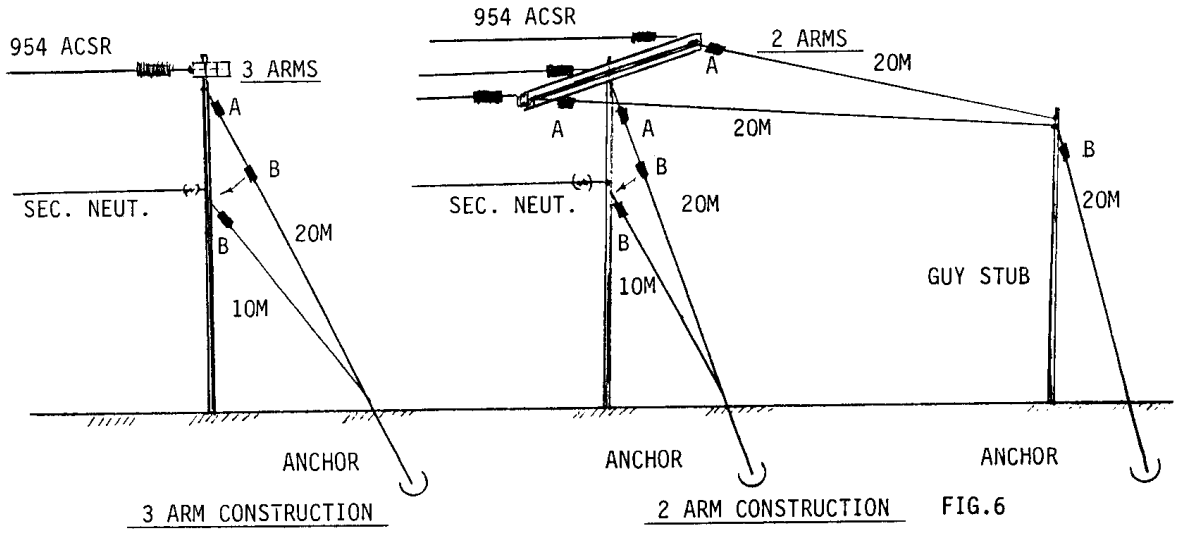

FIG.6

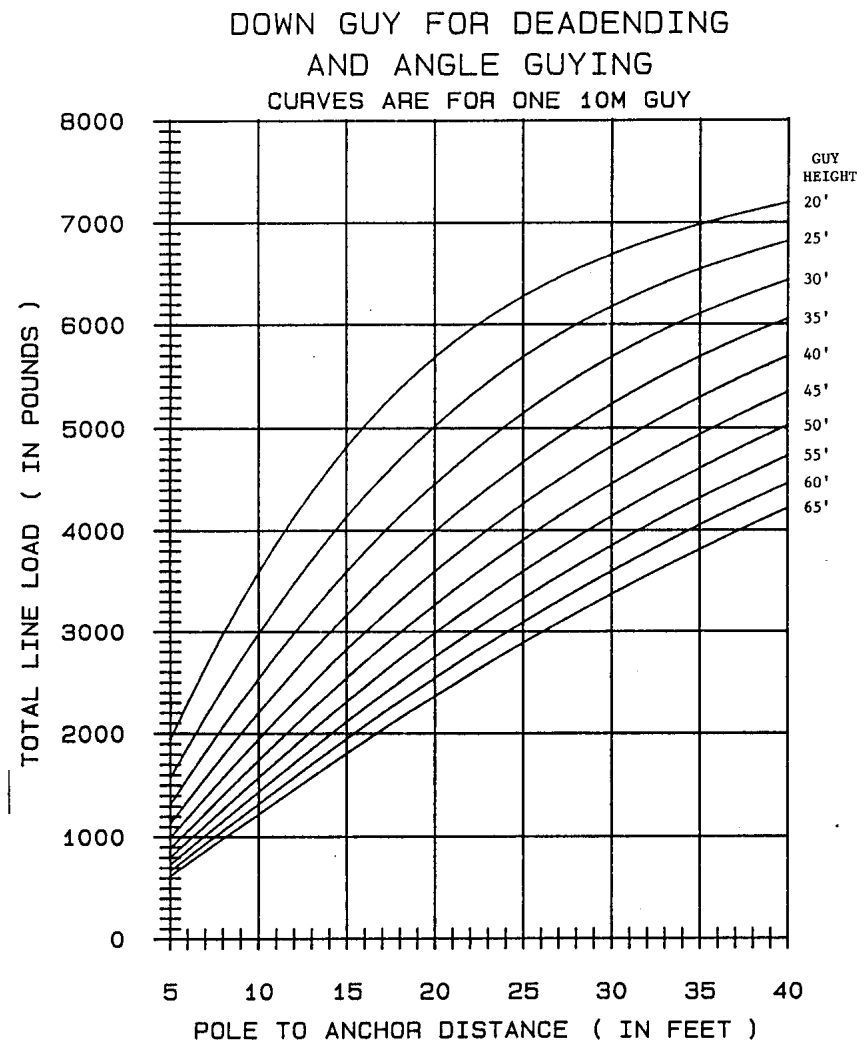

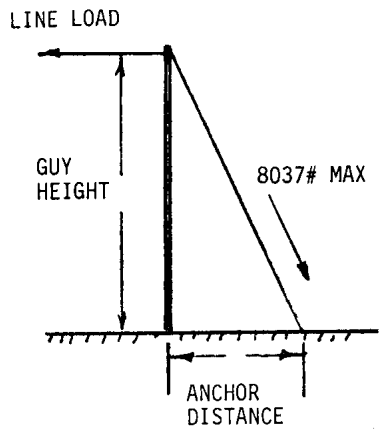

Maximum 10m Down Guy Tension is 8037 Pounds

GUY HEIGHT	POLE - ANCHOR DISTANCE (IN FEET) 5	10	15	20	25	30	35	40
20	1949	3594	4822	5683	6276	6688	6978	7189
25	1576	2985	4135	5021	5683	6174	6540	6816
30	1321	2542	3594	4458	5145	5683	6102	6430
35	1137	2208	3166	3988	4672	5231	5683	6049
40	997	1949	2822	3594	4260	4822	5293	5683
45	888	1744	2542	3264	3903	4458	4934	5340
50	800	1576	2310	2985	3594	4135	4609	5021
55	728	1438	2115	2747	3326	3849	4315	4727
60	667	1321	1949	2542	3091	3594	4050	4458

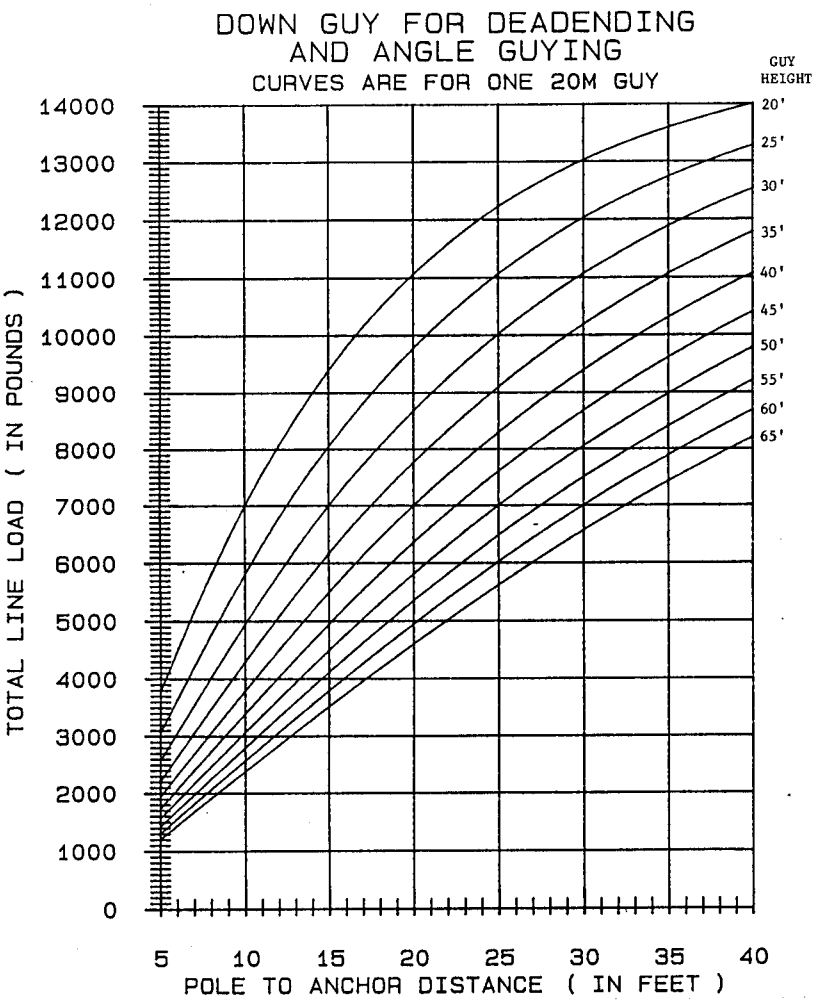

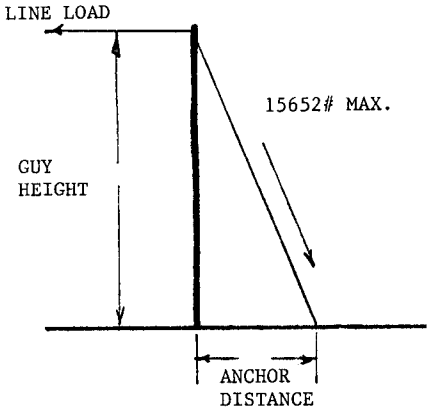

Maximum 20m Down Guy Tension is 15652 Pounds

GUY HEIGHT	POLE - ANCHOR DISTANCE (IN FEET) 5	10	15	20	25	30	35	40
20	3796	7000	9391	11068	12222	13023	13590	14000
25	3070	5813	8053	9778	11068	12024	12737	13273
30	2573	4950	7000	8682	10020	11068	11884	12522
35	2214	4300	6166	7766	9098	10186	11068	11779
40	1941	3796	5496	7000	8296	9391	10307	11068
45	1728	3395	4950	6357	7601	8682	9610	10399
50	1557	3070	4498	5813	7000	8053	8976	9778
55	1417	2800	4118	5349	6477	7495	8403	9206
60	1300	2573	3796	4950	6020	7000	7887	8682

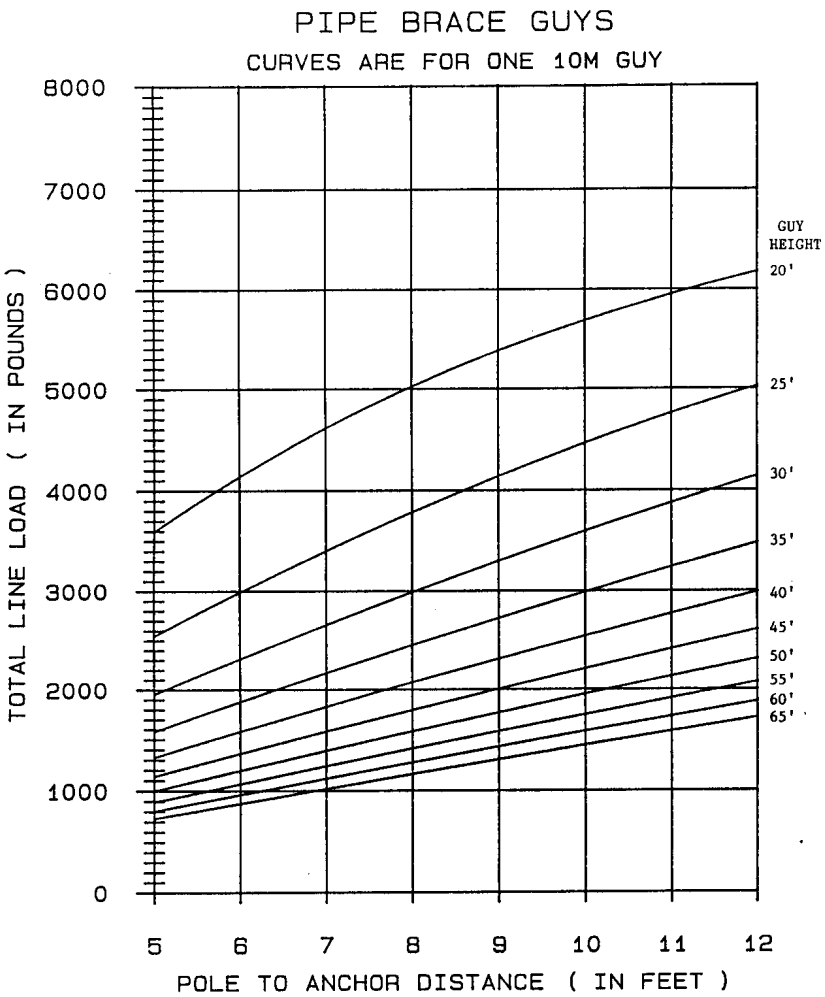

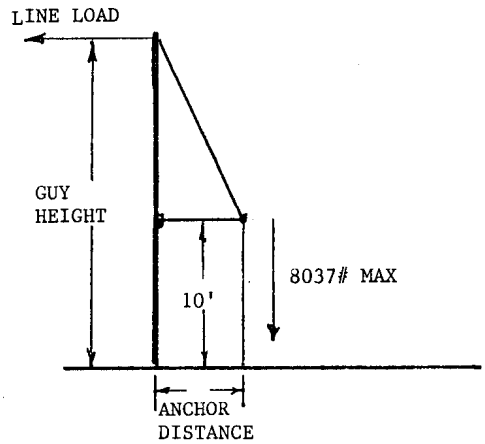

Maximum 10m Pipe Brace Tension is 8037 Pounds

GUY HEIGHT	POLE - ANCHOR DISTANCE (IN FEET) 5	6	7	8	9	10	11	12
20	3594	4135	4609	5021	5377	5683	5947	6174
25	2542	2985	3399	3782	4135	4458	4753	5021
30	1949	2310	2655	2985	3298	3594	3873	4135
35	1576	1876	2167	2450	2722	2985	3237	3478
40	1321	1576	1826	2071	2310	2542	2767	2985
45	1137	1358	1576	1791	2002	2208	2410	2607
50	997	1192	1385	1576	1764	1949	2131	2310
55	888	1062	1235	1407	1576	1744	1909	2071
60	800	958	1114	1270	1424	1576	1727	1876

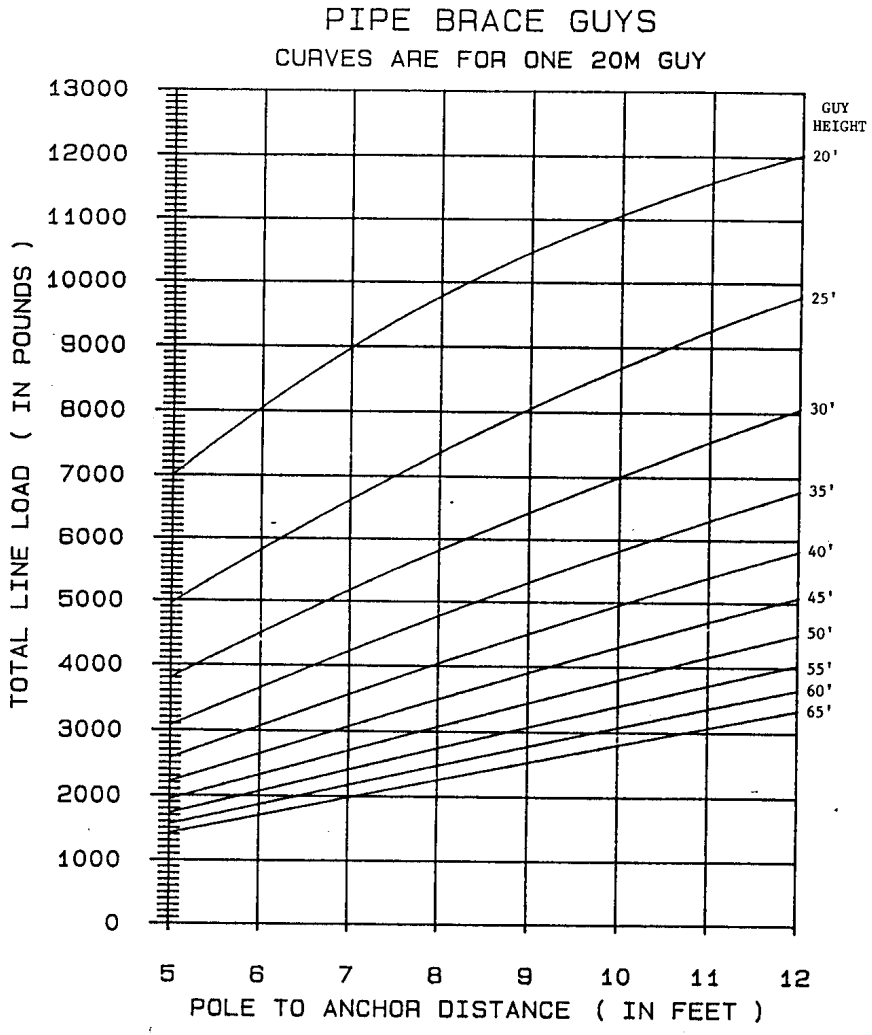

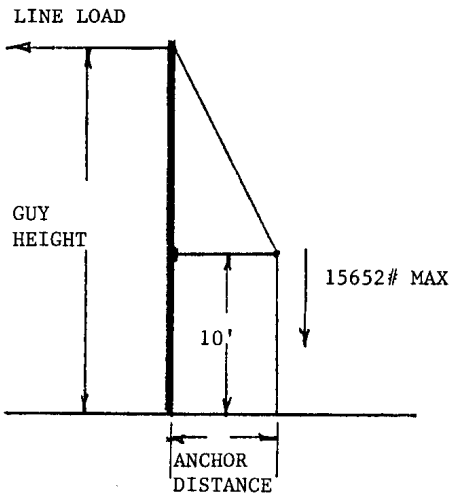

Maximum 20m Pipe Brace Tension is 15652 Pounds

GUY HEIGHT	POLE - ANCHOR DISTANCE (IN FEET) 5	6	7	8	9	10	11	12
20	7000	8053	8976	9778	10471	11068	11582	12024
25	4950	5813	6619	7366	8053	8682	9256	9778
30	3796	4498	5171	5813	6423	7000	7543	8053
35	3070	3653	4220	4770	5302	5813	6304	6773
40	2573	3070	3557	4033	4498	4950	5388	5813
45	2214	2645	3070	3488	3898	4300	4693	5076
50	1941	2322	2698	3070	3436	3796	4150	4498
55	1728	2069	2406	2740	3070	3395	3717	4033
60	1557	1865	2170	2473	2773	3070	3363	3653

COMMONLY USED GUYING HARDWARE

Material	Description	Matl. Std.	Stock No.
GUY WIRE	Aluminum Covered Steel, 5/16” – 9/16”	5664.1	566406 - 566425
DEAD END	Automatic, Feed Through	5650.3	565048E - 565052
GRIPS, Guy Wire	Preformed Deadend	5651.4	565122E - 565126
GUY HOOK	Spur Type	5651.15	565195E
POLE EYE PLATE	3/4” Bolt & Pin, 20,000 lbs @ 45º & 90º	5651.15	565198
	1” bolt, 36,000 lbs @ 45º 7/8” pin, 30,000 lbs @ 90º	5651.15	565199
GUY MARKER	Plastic, 8’ Lengths	5651.8	565168E
INSULATOR	Porcelain, Guy Strain	6901.1	690104E& 690106E
INSULATOR	Fiberglass, Guy Strain, 12” – 108”	6900.5	690090-690096
SPLICE	Automatic, Full Tension	5653.4	565337 & 565338
SHACKLE	3/4” & 7/8” pin, can be used to compensate for misalignment.	6966.1	696604 - 696618
GUY CLAMP	Sidewalk Guy Fitting	5650.1	565054
POLE PLATE	Sidewalk Guy Fitting	5650.1	565105
EYE NUT	Oval, 5/8” & 3/4”	5652.1	565252E& 565254E
	Strand, 5/8” & 3/4”	5652.1	565258E& 565260E
	Twin strand, 3/4”.	5652.1	565266E
	Triple eye for 1” anchor rod.	–	565274
CLEVIS, Anchor Rod Extension	Links to existing anchor rod eye. Use with Stock No. 562290 3/4” x 8’ rod.	–	562070
ANCHOR, Cross Plate	20”, use Stock No. 562290 - rod.	5620.7	562058
ANCHOR, Plate	“Manta Ray”	–	562050
ROD, Triple Eye	3/4” x 8’ For plate anchors.	5622.5	562290
ANCHORS, Single Helix, Screw	6”, 10,000 ft. lb.	–	562030
	10”, 15,000 ft. lb.	–	562028
ROD, Single Helix	1" x 1-1/2' Round	–	562090
	1" x 3-1/2' Round	–	562096
ANCHORS, Triple Helix, Screw	Diameters 10”, 11-5/16”, and 13-1/2”.	–	562043
ROD, Triple Helix	1-1/2" x 5' square.	–	562102
COUPLING, Extension Rod	For 3/4" or 1" rod.	–	562110

GUY WIRE

DEAD END

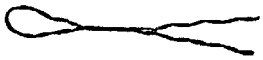
GRIPS

FULL TENSION SPLICE

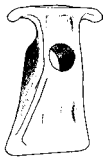
GUY HOOK

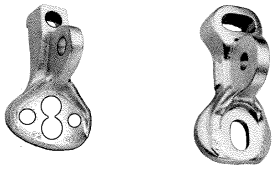
POLE EYE PLATES

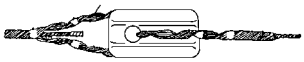
Porcelain

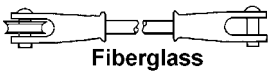
Fiberglass

INSULATORS

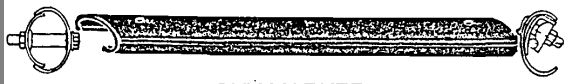
GUY MARKER

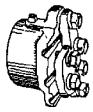
GUY CLAMP

POLE PLATE

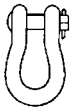
SHACKLE

Oval

Strand

Twin Strand

Triple

EYE NUTS

Coupling

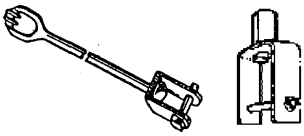
Clevis

ANCHOR ROD EXTENSIONS

STRAIN INSULATOR INSTALLATIONS

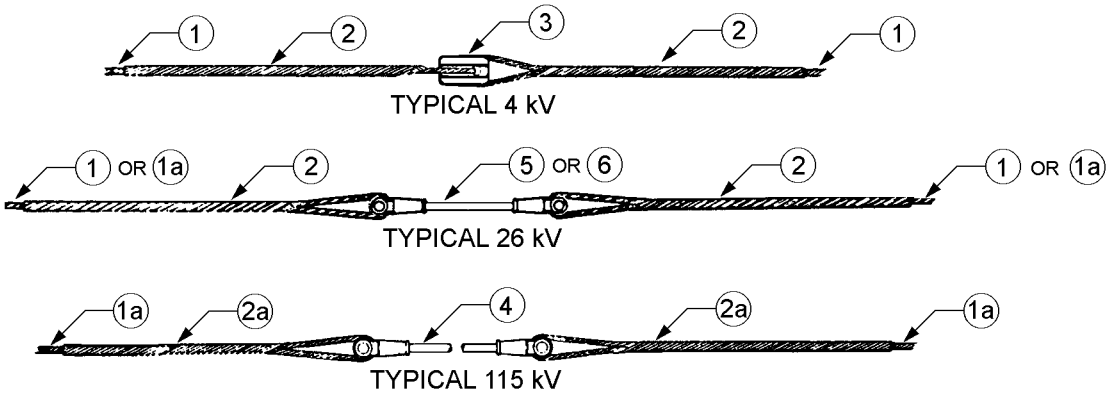

Material List			
Item	**Material, As Required**	**Stock No.**	**Rated Strength**
	WIRE		
1	5/16” Aluminum Covered Guy	566406	10,270 LB
1a	7/16” Aluminum Covered Guy	566408	20,000 LB
	GRIPS, GUY		
2	5/16” Aluminum Covered	565122E	10,270 LB
2a	7/16” Aluminum Covered	565124E	20,000 LB
3	Insulator, 506 Guy Strain	690106E	20,000 LB
4	108” Insulator, Fiberglass Strain	690094	21,000 LB
*5	12” Insulator, Fiberglass Strain	690092E	11,000 LB
6	35” Insulator, Fiberglass Strain	690090	21,000 LB

*Do not use with 7/16” aluminum covered guy.

POLE AND ANCHOR ATTACHMENTS

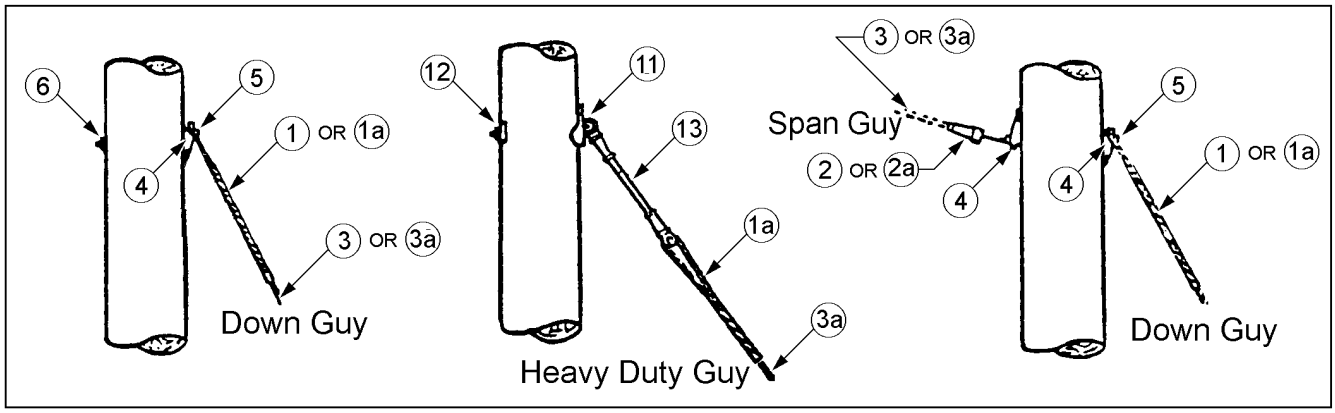

Material List on the following page.

POLE AND ANCHOR ATTACHMENTS - CONTINUED

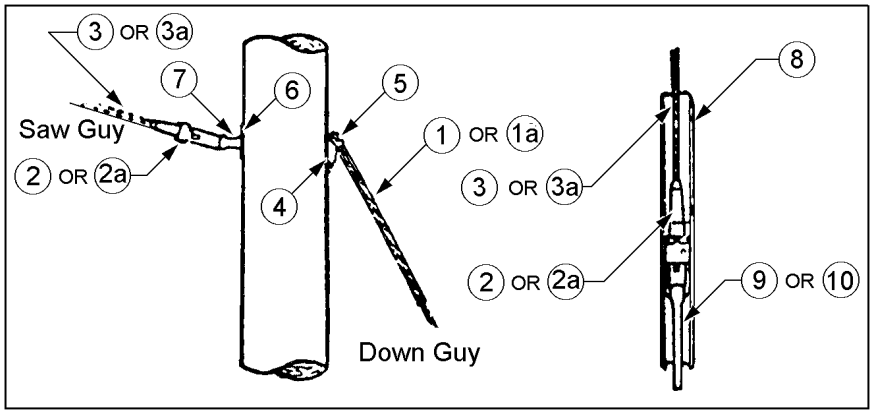

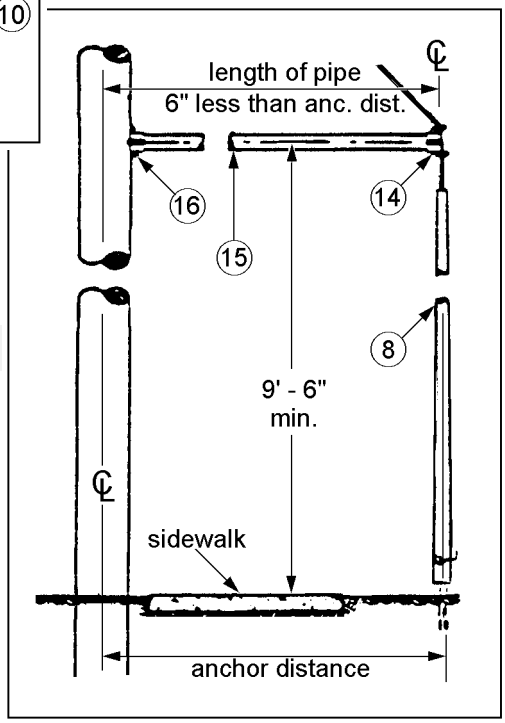

Material List		
Item	**Description**	**Stock No.**
1	Guy Grip, 5/16" Aluminum Covered	565122E
1a	Guy Grip, 7/16" Aluminum Covered	565124E
2	Deadend, Automatic, for 10M Guy	565048E
2a	Deadend, Automatic, for 20M Guy	565051
3	Wire, 5/16", Aluminum Covered Guy (10M)	566406
3a	Wire, 7/16", Aluminum Covered Guy (20M)	566408
4	Hook, Guy, 10M	565195E
5	Bolt, 3/4" x Length	780875E-780878E
6	Washer, 2-1/4"x 2-1/4" Flat	585135E
7	Nut, 3/4" Strand Eye	565254E
8	Marker, Plastic Guy	565168E
9	Rod, 3/4"x 8'-0" Galvanized Anchor	562290
10	Nut, Triple Eye, Galvanized	565274
11	Plate, Pole Eye	565198
12	Washer, Curved, 4x4	584775E
13	Insulator, Fiberglass, Strain 20M	690090
14	Clamp, Galvanized Guy Pipe, 2-1/2"	565054
15	Pipe, Galvanized Water, 2-1/2"x (As Req'd)	710370
16	Plate, Galvanized Guy Pole, 2-1/2"	565105

dummy tab front - D7 - D9

dummy tab back - D7 - D9

115 KV TRANSMISSION CONSTRUCTION (HORIZONTAL LINE POST)

NOTE: For guying, see standard D6-4

Maximum design angle loading 2600 lbs.

Maximum cantilever strength 2800 lbs.

Equivalent spacing 9'

Minimum clearance between 115kV and 26kV circuits is 7' at maximum sag.
See Const. Guidelines D2-2 and D2-3.

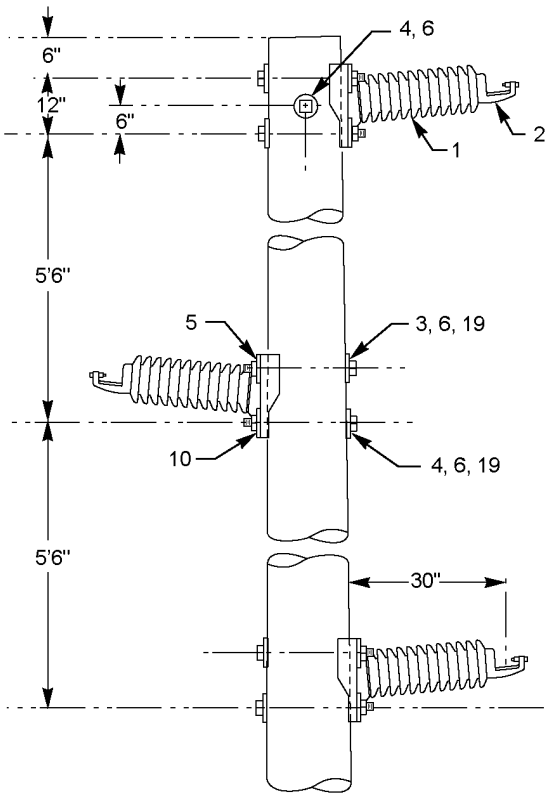

TANGENT POLE - NO STATIC WIRE

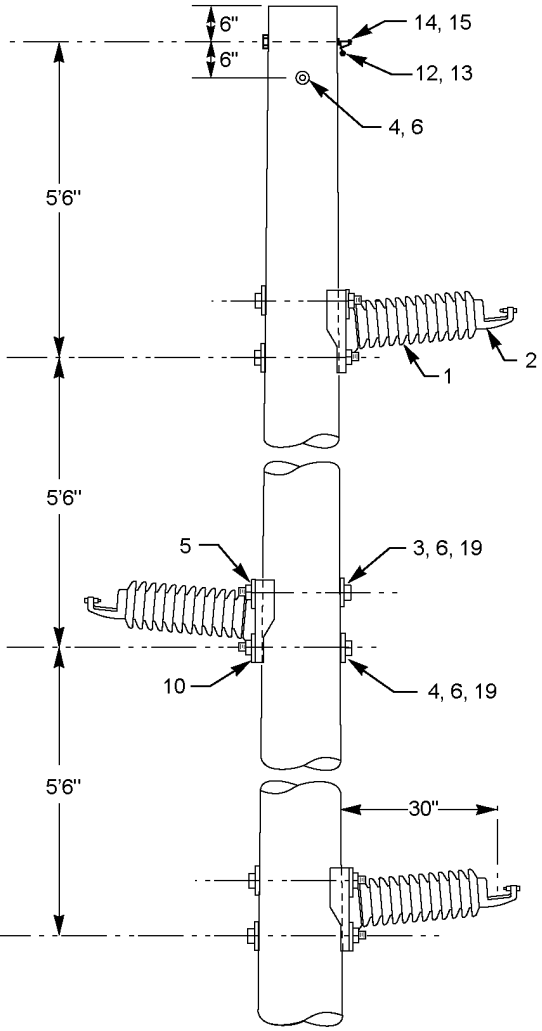

TANGENT POLE - WITH STATIC WIRE

ORIGINATOR	STANDARDS COORDINATOR	STANDARDS SUPERVISOR	UNIT DIRECTOR
Jim S. Horn	Charles L. Shaffer	John C. Skinner	Betty Robin

115 KV TRANSMISSION CONSTRUCTION (VERTICAL LINE POST)

Maximum design angle loading 2600 lbs.

Maximum cantilever strength 2800 lbs.

Minimum clearance between 115 kV and 26kV circuits is 7' at maximum sag.
See Const. Guidelines D2-2 and D2-3.

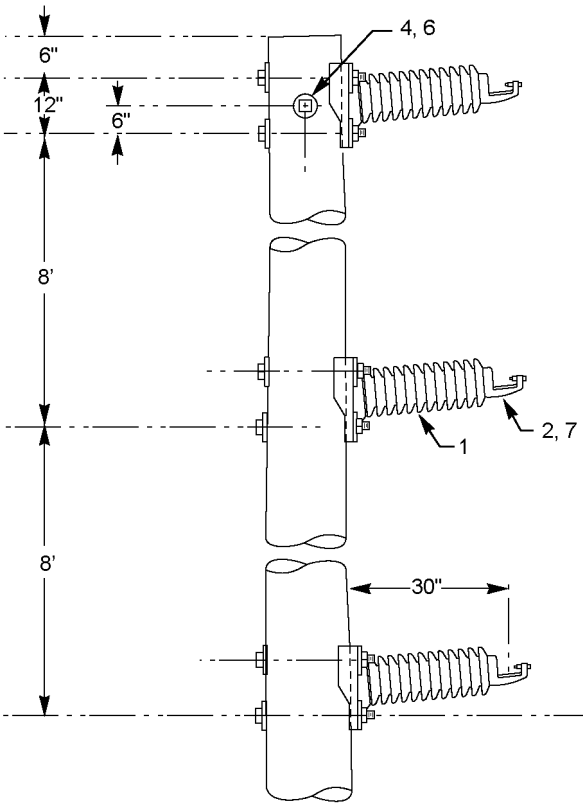

TANGENT POLE - NO STATIC WIRE

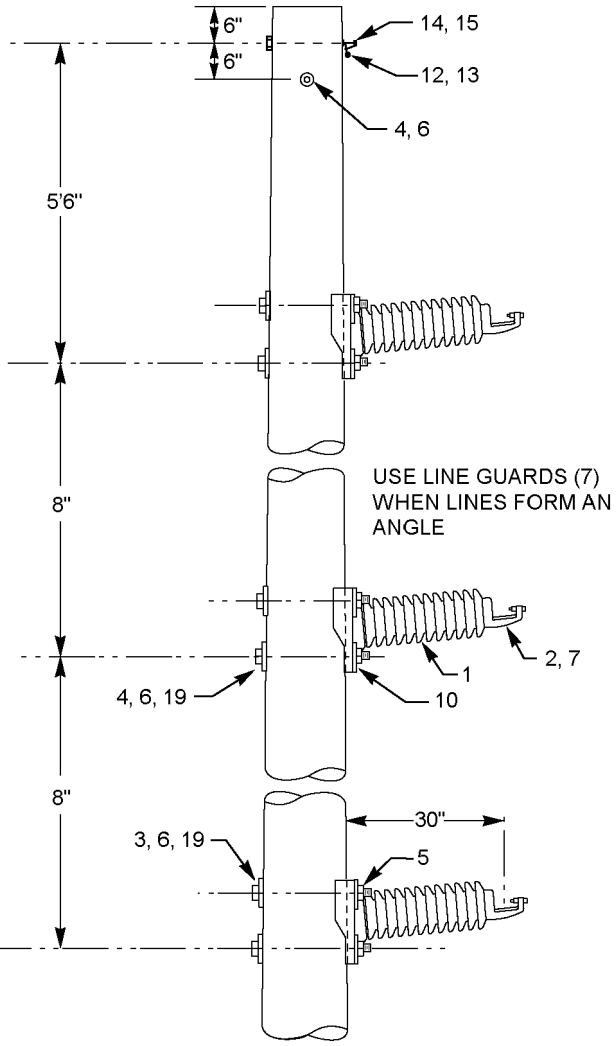

TANGENT POLE - WITH STATIC WIRE

115 KV TRANSMISSION CONSTRUCTION (VERTICAL SWING CORNER)

NOTE: Use 7 insulators for wood poles and 8 insulators for steel or concrete poles.

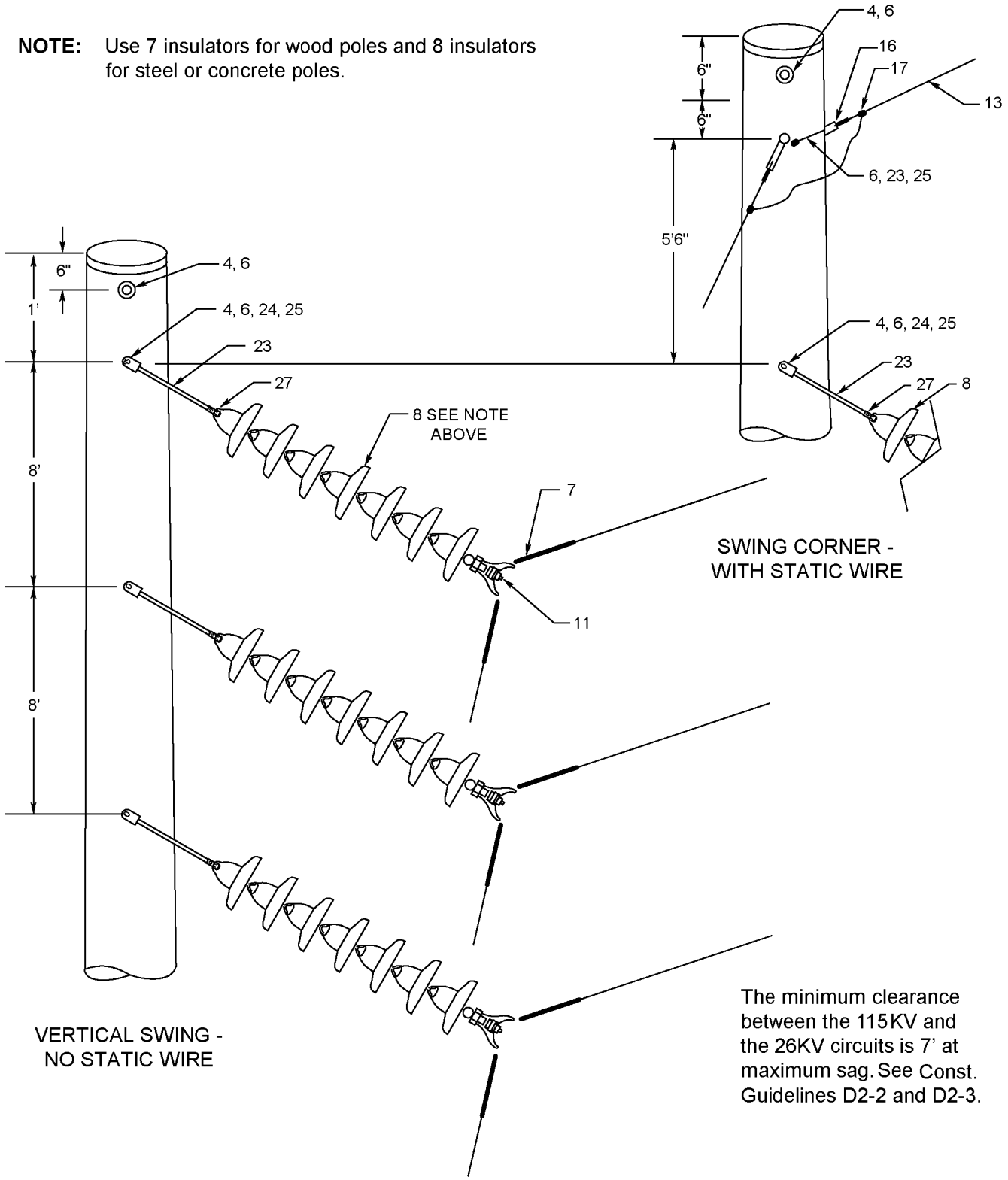

The minimum clearance between the 115KV and the 26KV circuits is 7' at maximum sag. See Const. Guidelines D2-2 and D2-3.

115 KV TRANSMISSION CONSTRUCTION (VERTICAL DEADEND)+

NOTES: 1. On a high tension line (maximum design tension over 5000 lbs.) use body and eye deadend STK # 659668 thru 659799 and compression terminal STK # 651220 thru 651224.

2. On a low tension line (maximum design tension of 5000 lbs. or less) - - - if the deadend structure is steel or concrete **and** the next structure is steel or concrete, use body and eye; if the next structure is wood, **or** both the deadend structure and the next structure are wood, the aluminum strain clamp may be used.

3. Use 7 insulators for wood poles and 8 insulators for steel or concrete poles.

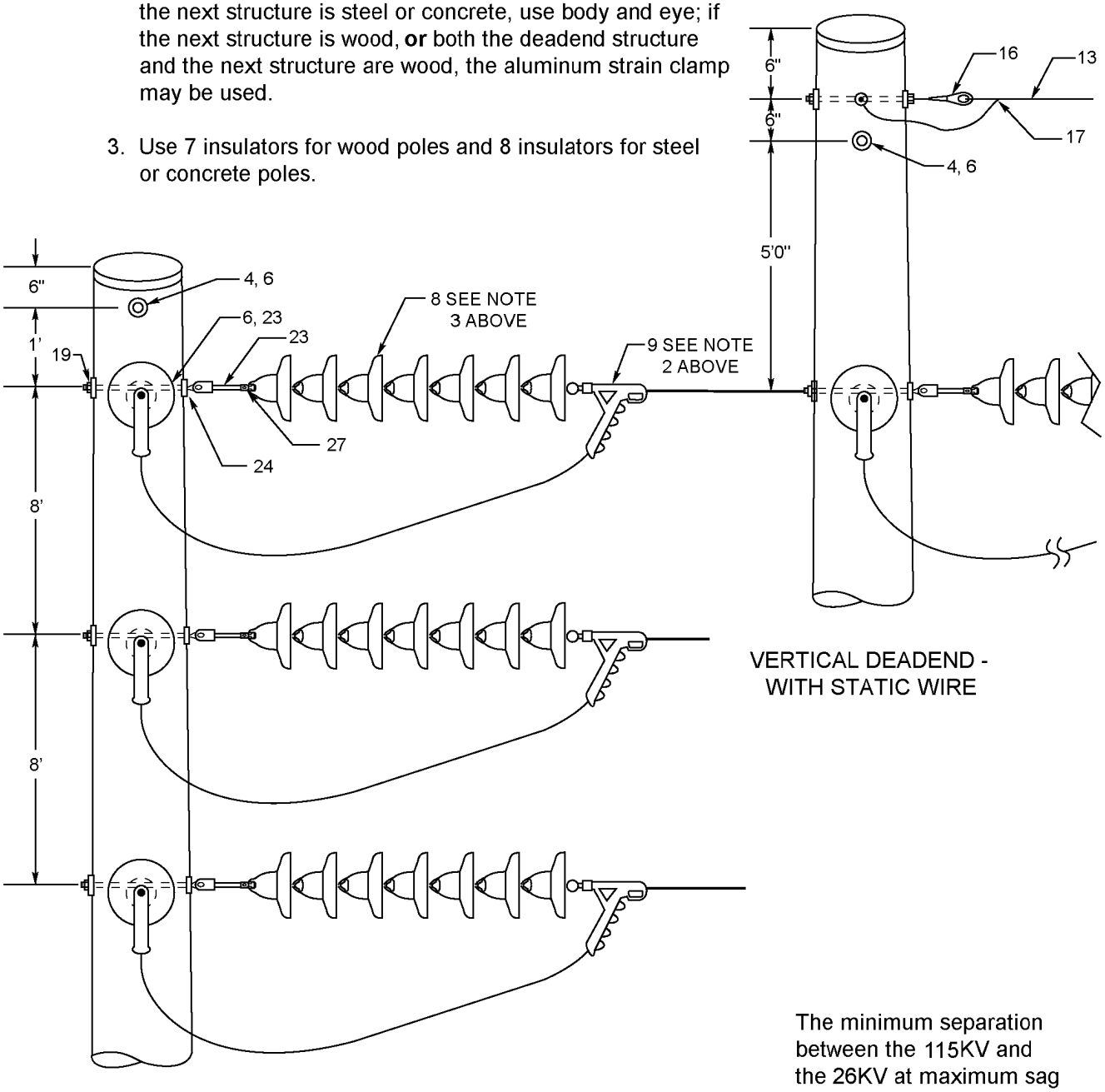

VERTICAL DEADEND - WITH STATIC WIRE

VERTICAL DEADEND - NO STATIC WIRE

The minimum separation between the 115KV and the 26KV at maximum sag shall be 7'. See Const. Guidelines D2-2 and D2-3.

115 KV TRANSMISSION CONSTRUCTION
(STATIC WIRE, MATERIAL LISTING)

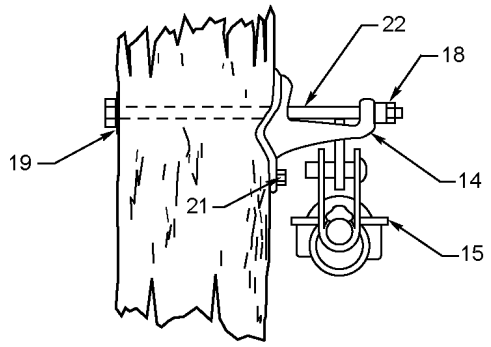

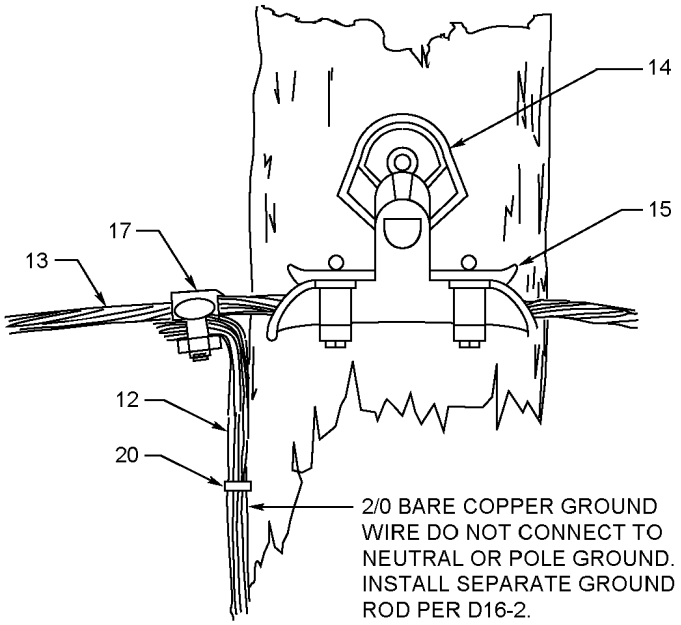

ITEM	QUANTITY	STOCK NUMBER	DESCRIPTION
1	3	690184	INSULATOR, Line Post, 115KV
2	3	695193-695194	CLAMP, ALUMINUM, for Line Post Insulators
3	3	780875E-781072E	BOLT, MACHINE, Galv. 3/4” x L
4	5	780845E-781046E	BOLT, MACHINE, Galv. 5/8” x L
5	8	584267E	WASHER, LOCK, Coiled Spring 3/4”
6	8	585135E	WASHER, SQUARE FLAT, Galv., 2-1/4”
7	3	658935-658946	LINE GUARD, Formed, For Conductor Used
8	21/24	690210	INSULATOR, SUSPENSION, Porcelain
9	3/6	693805-693825	CLAMP, STRAIN, Aluminum
10	4	584261E	WASHER, LOCK, Coiled Spring 5/8”
11	3	695115-695167	CLAMP, SUSPENSION, Aluminum
12	100’	610425	WIRE, # 2/0, BC
13	-	566425	WIRE, STATIC, .486, Alumoweld
14	1	565005	BRACKET, Ground Wire
15	1	695015	CLAMP, SUSPENSION, Static Wire
16	1 or 2	Non-stock	DEADEND, AUTOMATIC, 1/2” Static Wire, Reliable 5204-L
17	2	669379E	CONNECTOR, Static Wire Jumper
18	1	Non-stock	PALNUT #4532, 5/8”, galvanized
19	1	584947E	WASHER, FLAT, 3” x 3” x 3/16”
20	-	583261E	STAPLES, Copperweld, 1/2” x 2”
21	1	785261E	BOLT LAG, 1/2” x 2”
22	1	780845E	BOLT, MACHINE, 5/8” x 12”
23	3 or 6	561112E	BOLT, OVAL EYE, 5/8” x 12”
24	3 or 6	565280	NUT, CLEVIS, 5/8”
25	3 or 6	565252E	NUT, OVAL EYE, 5/8”
27	6	695505	BALL CLEVIS

TYPICAL
NUMBER BOARD INSTALLATION

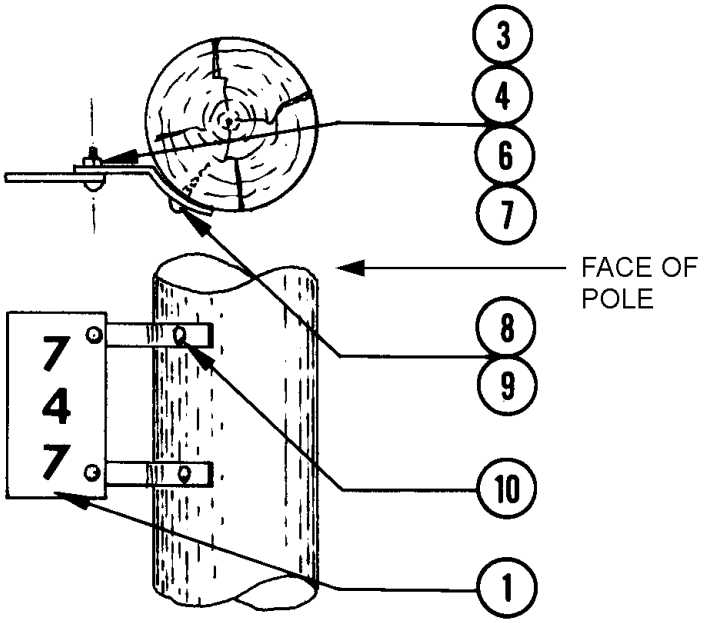

d8-10.tif

Note: Number Board to be on street side so it can be read from either direction on the street.

Material List

Item	Description	Stock No.
1	Number Board, Shop Made*	–
3	Flat Washer, 1/4" Bronze	788022E
4	Hex Nut, 1/4" Bronze	783321E
6	Cap Screw, 1/4"x1", Bronze	784505E
7	Lock Washer, 1/4" Bronze	788121E
8	Lag Screw, 1/4"x4"	785216E
9	Flat Washer, 3/8"x1" Galvanized	585020E
10	Bracket, Number Board Mtg.	563225

*Order numerals on both sides of number boards which are to be installed on the side of the pole.

ORIGINATOR	STANDARDS COORDINATOR	STANDARDS SUPERVISOR	UNIT DIRECTOR
Jim S. Horn	Charles L. Shaffer	John Schimmer	Harold Jay

note: D8-11 retained for maintenance and reference only, for new construction, install loadbreak switch per D8-17 or D8-19.

SEATTLE CITY LIGHT
CONSTRUCTION GUIDELINE

STANDARD NUMBER: **D8-11**
PAGE: 1 of 3
DATE: September 3, 1985
REV: November 6, 2002

26 KV - 3 POLE GANG OPERATED AIR BREAK SWITCH, WOOD CROSSARM

NOTE: For maintenance and/or reference only. For new construction, install loadbreak switch per D8-17 or D8-19.

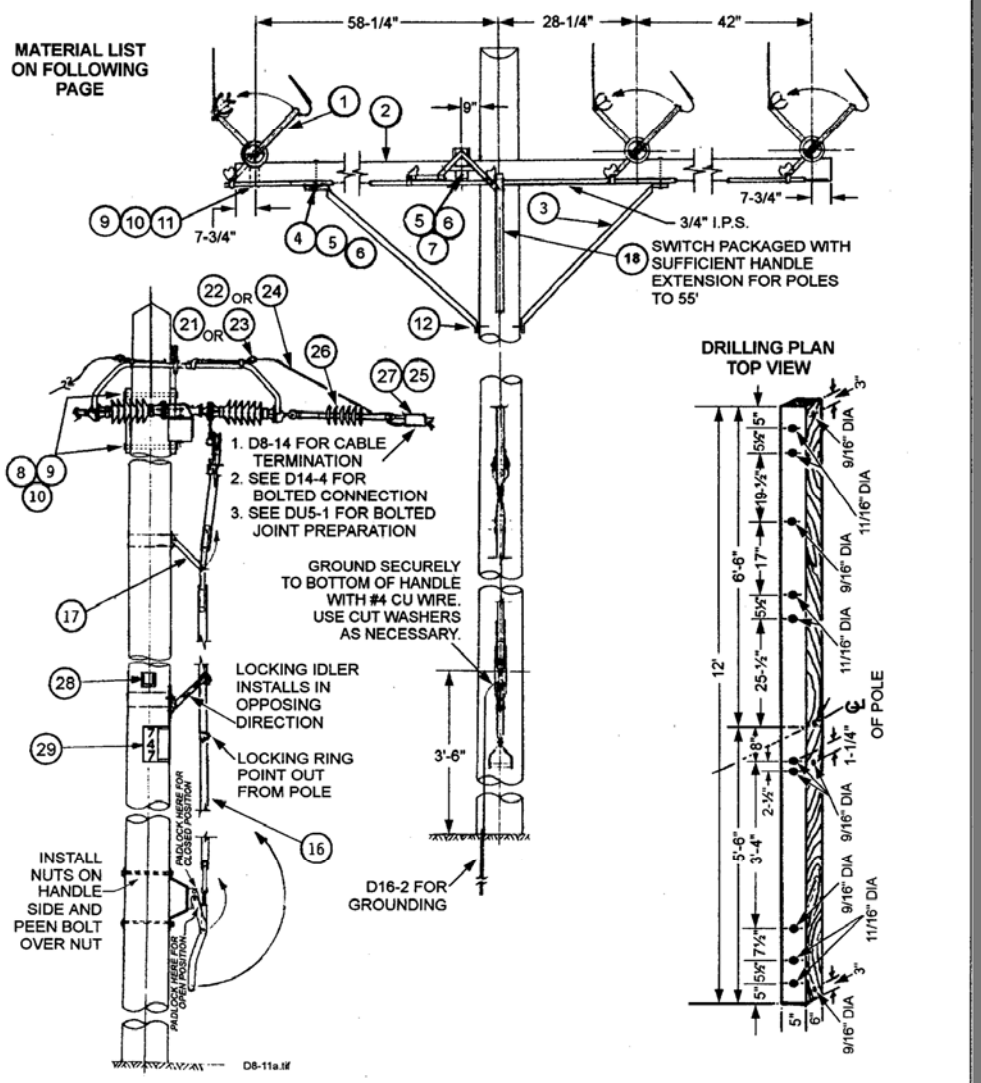

ORIGINATOR	STANDARDS COORDINATOR	STANDARDS SUPERVISOR	UNIT DIRECTOR
Lem S. Horn	Charles L. Shaffer	John E. Skinner	Harden Jay

standards coordinator	standards manager	unit director
John Shipek	John Shipek	Pamela S. Johnson

note: D8-11 retained for maintenance and reference only, for new construction, install loadbreak switch per D8-17 or D8-19.

SEATTLE CITY LIGHT
CONSTRUCTION GUIDELINE

STANDARD NUMBER: **D8-11**
PAGE: 2 of 3

See D8-12 for standard installations.

Item	Req'd	Description	Stock No.
1	1	SWITCH, 600 amp (2 bolt pad)	250137
		SWITCH, 1200 amp (4 bolt pad)	250139
2	1	CROSSARM, 26 kV switch	540221
3	2	BRACE, 5', special	563013
4	2	BOLT, 1/2" x 7", galv, mach.	780808E
5	7	WASHER, 1/2", galv, cut	585025E
6	5	WASHER, 1/2", coil spring	584257E
7	3	BOLT, 1/2" x 6", galv, mach.	780806E
8	1	BOLT, 3/4" x L, galv, mach.	780875E-781072E
9	10	WASHER, 2-1/4" square	585135E
10	7	WASHER, 3/4", coil spring	584267E
11	6	BOLT, 5/8" x 8", galv, mach.	780840E
12	4	SCREW, 1/2" x 6", galv, lag	785265E
13	2	PADLOCK, switch, SNM-1	-----
14	2	BOLT, 5/8" x L, galv, mach.	780844E-781040E
16	1	HANDLE EXTENSION, metal	254978
17	*	ASSEMBLY, guide base	254980
18	*	HANDLE EXTENSION, fiberglass	254987
19	3'	CHAIN, weldless sash	726992
20	12	BOLT ASSY, 1/2" x 2-1/2", stnls stl	782041
21	6	TERMINAL, compression, 954 AAC	651224
22	42'	WIRE, AAC, 954 kcmil	600126
23	6	TERMINAL, comp, 500 kcmil, cu	650267
24	42'	WIRE, 500 kcmil, cu, S.D.	610397
25	6	AMPACT TAP, per D14-1	
26	6	INSULATOR, susp, composite	690233
27	6	CLAMP, D.E. strain, 1/0-300 stl	693370
		3/0-477 al	694292
		795-954 al	694294
28	1	HOLDER, switch tag	581799
29	1	BOARD, number, CL shop made per D8-10	

* as required

PLAN OF ARM

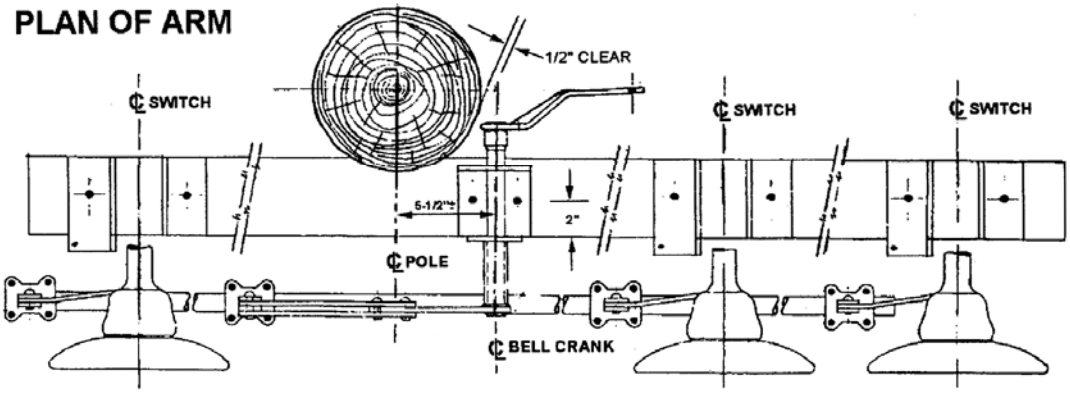

90° SPECIAL BELL CRANK INSTALLATION STOCK # 254939

(1) OFFSET ARM ADDITIONAL 6" TO RIGHT (ABOVE DWG.) OR OFFSET ARM WITH 2 UNITS ON LEFT.

(2) KPF BRACE MUST BE LOCATED TOWARD FACE OF POLE TO AVOID CONFLICT WITH OPERATING ROD.

note: D8-11 retained for maintenance and reference only, for new construction, install loadbreak switch per D8-17 or D8-19.

SEATTLE CITY LIGHT
CONSTRUCTION GUIDELINE

STANDARD NUMBER: **D8-11**
PAGE: 3 of 3

QUICK BREAK ASSEMBLY

QUICK BREAK ROD MUST BE SET EXACTLY ON CENTERLINE OF HOOK, AS HOOK POSITION CAN NOT BE ADJUSTED. THE ARCHING HORN SHOULD STAND VERTICALLY WITHOUT ADDING ANY COMPRESSION THRU CASTING. TIGHTEN GUIDE CASTING ONLY TO TAKE OUT LOOSENESS.

NOTE: ALL AIR BREAK SWITCHES SHOULD BE UPDATED TO INCORPORATE THE QUICK-BREAK ASSEMBLY. CHECK WITH ENGINEERING. STOCK NO. 264851.

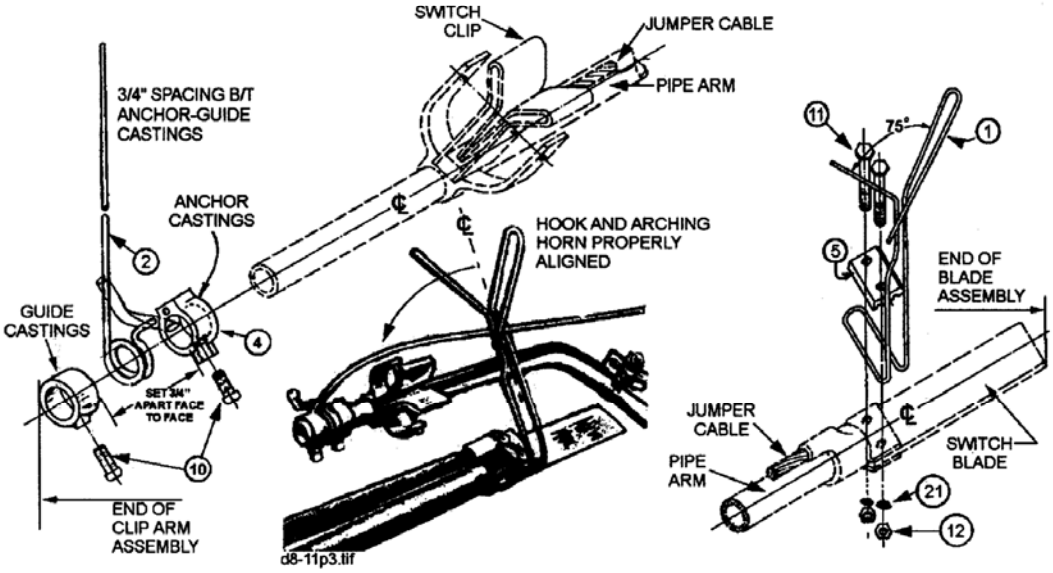

PARTS LIST TYPE "A" SWITCHES

Item	Description
1	BERYLLIUM COPPER HOOK
2	BERYLLIUM COPPER SPRING 15-1/2" long
3	GUIDE CASTING
4	ANCHOR CASTING
5	GROOVED WASHER
10	1/2" X 1" GALV. SET SCREWS
11	5/16" X 1-3/8" EVERDUR MACHINE BOLTS
12	5/16" X 1-3/8" EVERDUR NUTS
21	5/16" LOCK WASHER, EVERDUR

note: D8-12 retained for maintenance and reference only, for new construction, install loadbreak switch per D8-17 or D8-19.

SEATTLE CITY LIGHT
CONSTRUCTION GUIDELINE

STANDARD NUMBER: **D8-12**
PAGE: 1 of 1
DATE: September 17, 1998
REV: November 6, 2002

26 KV, 3 POLE GANG OPERATED AIR BREAK SWITCH, UNITIZED

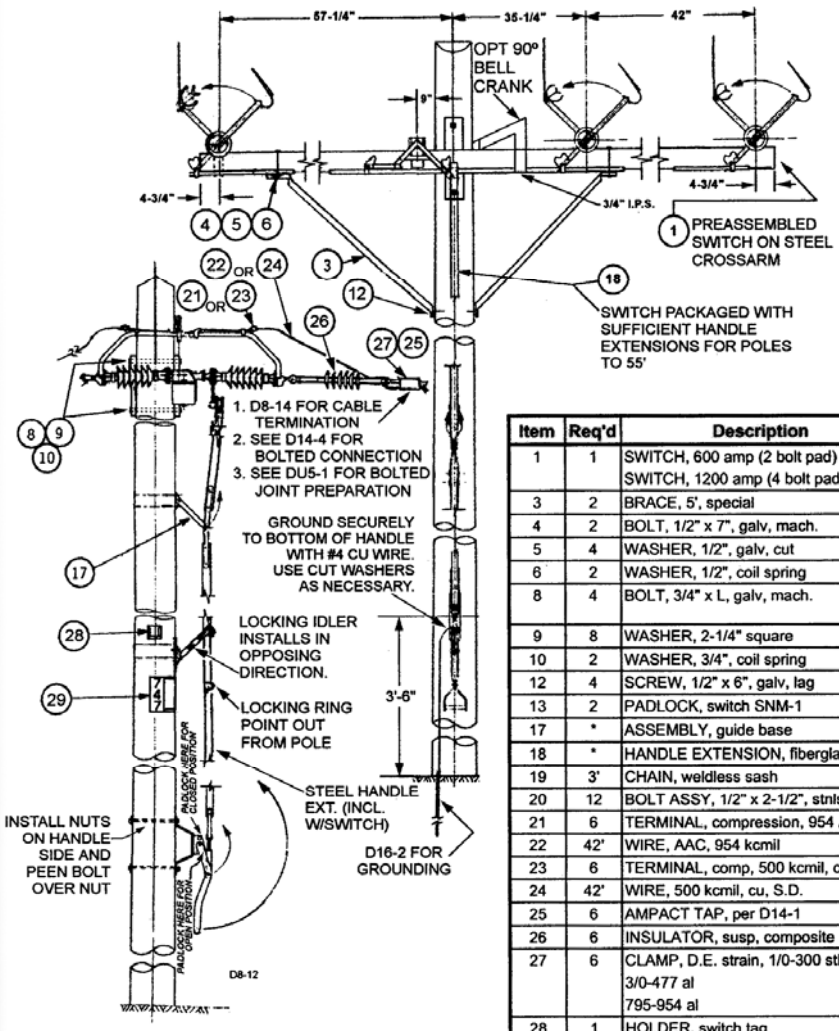

Item	Req'd	Description	Stock No.
1	1	SWITCH, 600 amp (2 bolt pad) SWITCH, 1200 amp (4 bolt pad)	250135 250131
3	2	BRACE, 5', special	563013
4	2	BOLT, 1/2" x 7", galv, mach.	780808E
5	4	WASHER, 1/2", galv, cut	585025E
6	2	WASHER, 1/2", coil spring	584257E
8	4	BOLT, 3/4" x L, galv, mach.	780875E-781072E
9	8	WASHER, 2-1/4" square	585135E
10	2	WASHER, 3/4", coil spring	584267E
12	4	SCREW, 1/2" x 6", galv, lag	785265E
13	2	PADLOCK, switch SNM-1	-----
17	*	ASSEMBLY, guide base	254980
18	*	HANDLE EXTENSION, fiberglass	254987
19	3'	CHAIN, weldless sash	726992
20	12	BOLT ASSY, 1/2" x 2-1/2", stnls stl	782041
21	6	TERMINAL, compression, 954 AAC	651224
22	42'	WIRE, AAC, 954 kcmil	600126
23	6	TERMINAL, comp, 500 kcmil, cu	650267
24	42'	WIRE, 500 kcmil, cu, S.D.	610397
25	6	AMPACT TAP, per D14-1	-----
26	6	INSULATOR, susp, composite	690233
27	6	CLAMP, D.E. strain, 1/0-300 stl 3/0-477 al 795-954 al	693370 694292 694294
28	1	HOLDER, switch tag	581799
29	1	BOARD, number, CL shop made per D8-10	

*as required

ORIGINATOR	STANDARDS COORDINATOR	STANDARDS SUPERVISOR	UNIT DIRECTOR
Jim S. Horn	Charles L. Shaffer	John E. Skinner	Harold Jay

standards coordinator	standards manager	unit director
John Shipek	John Shipek	Pamela S. Johnson

SEATTLE CITY LIGHT

CONSTRUCTION GUIDELINE

STANDARD NUMBER: **D8-14**
PAGE: 1 of 1
DATE: December 13 1961
REV: June 4, 2001

TYPICAL 26 KV SWITCH TERMINATION ASSEMBLY

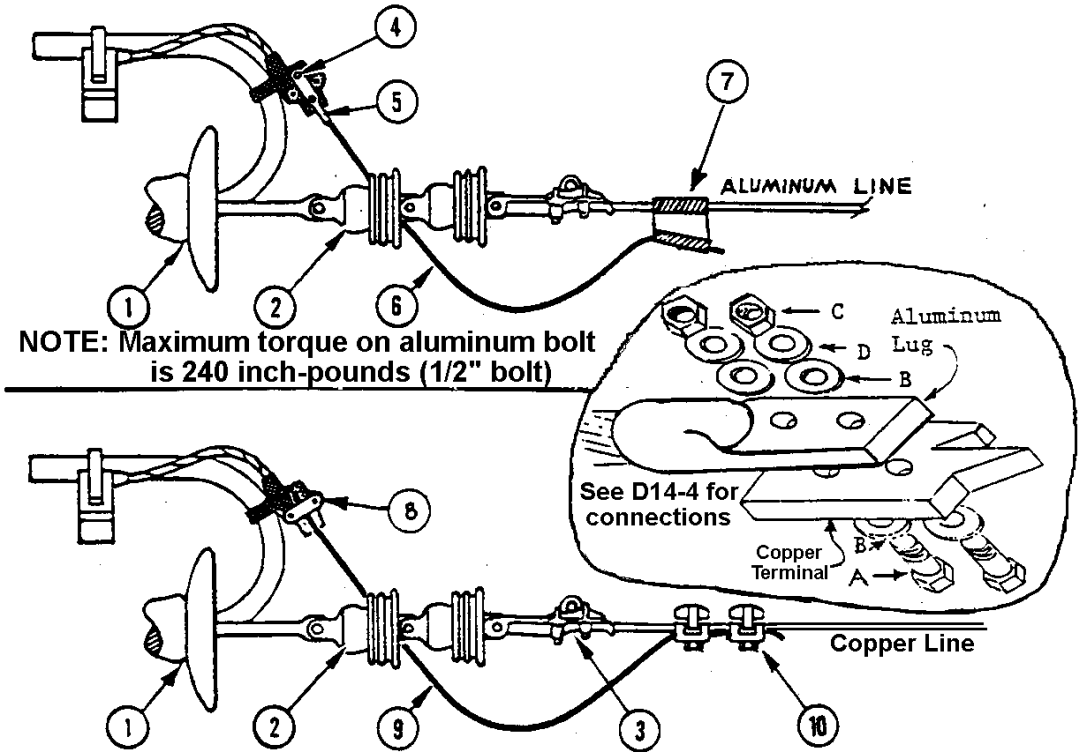

BILL OF MATERIAL

ITEM	QUANTITY	DESCRIPTION			STOCK NO.
1	1	SWITCH, KPF or S&C			As Specified
2	12	INSULATOR, 6” suspension			690208
3	6	CLAMP, DE Strain	Copper	#4	581332E
				#2	581333
				1/0 to 300	693901
			Aluminum	3/0 to 477	694292
				795 to 954	694294
4	12	(A) BOLT, 1/2”-13 x 2-1/2”, (B) WASHER, Al., (C) NUT, Al., (D) WASHER, Belleville Spring			782051
5	6	TERMINAL, Compression, Cable to copper pad		4/0 to 500	650267
		TERMINAL, Compression, Cable to 4 hole pad		4/0 to 500	651224
6	35 ft.	WIRE, All Aluminum		397.5 AAC	600113
				954 AAC	600126
7	6	CONNECTOR, Tap, Ampact			See D14-1
8	6	TERMINAL, Bolted, Copper			Supplied with switch
9	35 ft.	WIRE, Copper, Jumper		#2	610434
				2/0	610425
				4/0	610414
10	12	CONNECTOR, Tap, 2-bolt, parallel			669379E thru 669384

ORIGINATOR	STANDARDS COORDINATOR	STANDARDS SUPERVISOR	UNIT DIRECTOR
Jim S. Horn	Charles L. Shaffer	John C. Skinner	Betty Robin

SWITCH, 600 AMP, 3 POLE, GANG OPERATED FOR WOOD POLE MOUNTING, UPRIGHT

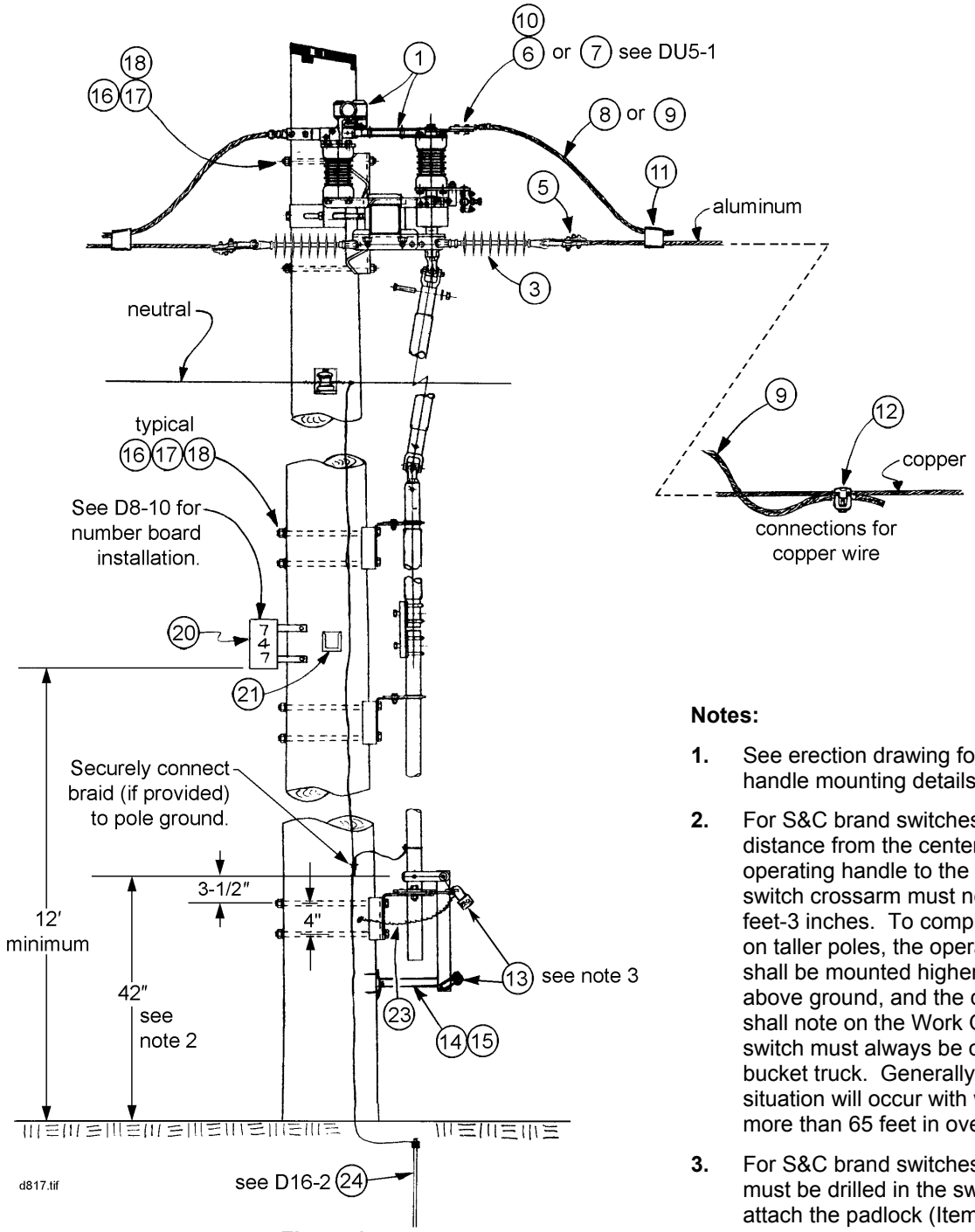

Figure 1

Notes:

1. See erection drawing for switch and handle mounting details.
2. For S&C brand switches only: The distance from the centerline of the operating handle to the bottom of the switch crossarm must not exceed 52 feet-3 inches. To comply with this limit on taller poles, the operating handle shall be mounted higher than 42 inches above ground, and the design engineer shall note on the Work Order that this switch must always be operated with a bucket truck. Generally speaking, this situation will occur with wood poles more than 65 feet in overall length.
3. For S&C brand switches only: A hole must be drilled in the switch handle to attach the padlock (Item 13).

STANDARDS COORDINATOR	STANDARDS SUPERVISOR	UNIT DIRECTOR
Charles L. Shaffer	John G. Skinner	Hardev Juj

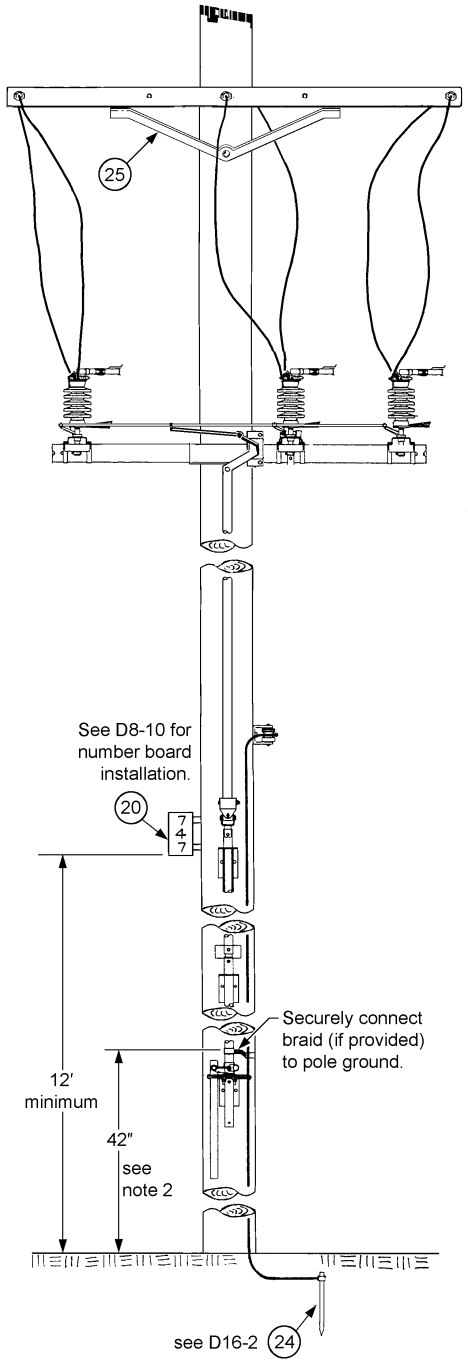

Alternate Underbuild Arrangement
front view
Figure 2

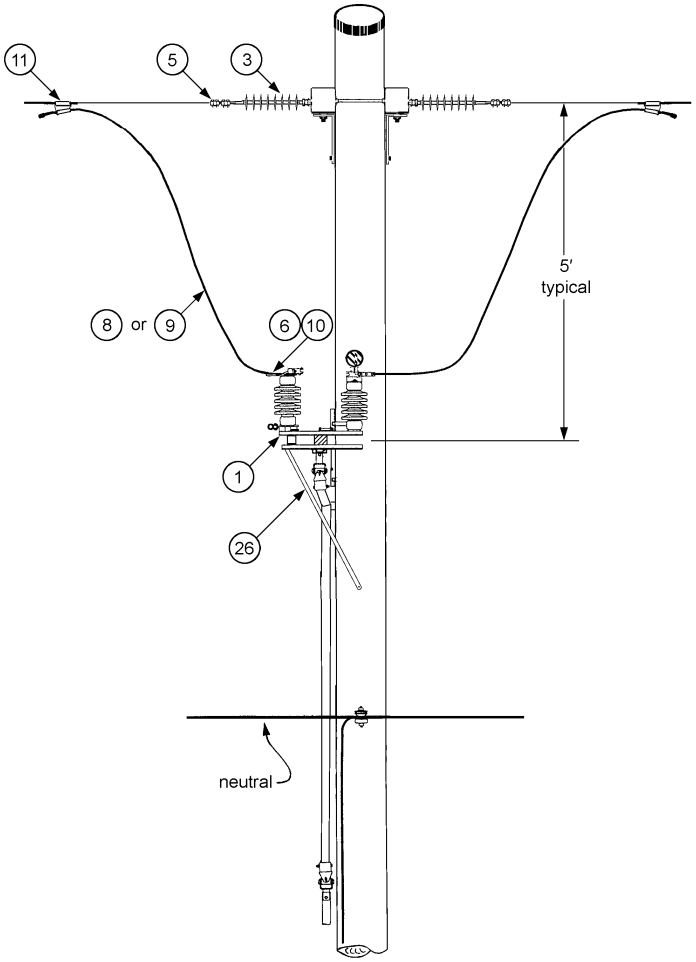

Alternate Underbuild Arrangement
side view
Figure 3

Material List

Item	Quantity	Description		Stock Number
1	1	SWITCH, 600 amp, loadbreak		250150
3	6	INSULATOR, Suspension, composite, 21″		690233
5	6	CLAMP, Deadend, strain	4/0 Cu	693901
			397 Al	694292
6	6	TERMINAL, Compression, 4/0 AAC-500 kcmil Cu		650267
7	6	TERMINAL, Bolted, copper	4/0	677081E
			250 kcmil	677083E
8	36′	WIRE, 397 kcmil Al (Canna)		600113
9	36′	WIRE, Stranded, copper, bare	4/0	610414
			250 kcmil	610412
10	12	BOLT ASSEMBLY, 2″ x 1/2″, stainless steel		782040
11	6	TAP, Ampact, per D14-1		–
12	6	TAP, 2 bolt, parallel type		669381E
13	2	PADLOCK, SNM-1		–
14	1	GUIDE, ASSEMBLY from KPF handle		254980
15	2	BOLT, Lag, 1/2″ x 4″		785261E
16	12	BOLT, Machine, 5/8″ x L, galvanized		780845E through 781046E
17	12	WASHER, Square, curved, 4″ x 4″		584775E
18	12	WASHER, Split, lock, 5/8″		584260E
20	1	NUMBER BOARD, SCL shop made per D8-10		–
21	1	HOLDER, Switch Tag		581799
23	3′	CHAIN, weldless, sash		726992
24	1	GROUND ROD, 5/8″ x 8′		564238E
25	2	ANGLE CROSSARM BRACE, steel, 72″ x 22″		563010E
26	2	CROSSARM BRACE, Al, 5′		563013

26/34.5 KV UPRIGHT SWITCH, 1200 AMP, 3 POLE, GANG OPERATED FOR WOOD POLE MOUNTING

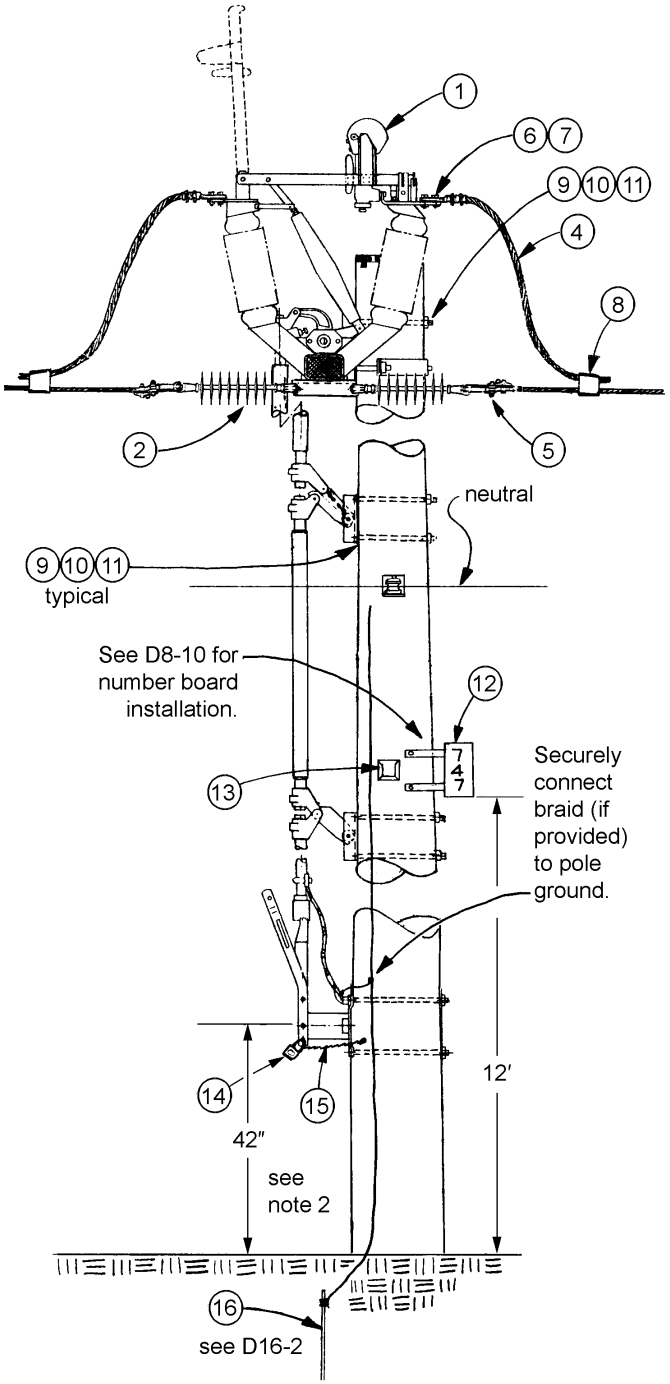

Figure 1

Material List

Item	Quan -tity	Description	Stock Number
1	1	SWITCH, 1200 amp, loadbreak	250152
2	6	INSULATOR, suspension, composite, 21″	690233
4	50′	WIRE, aluminum, stranded, 954 kcmil	600126
5	6	CLAMP, deadend, strain, 954 kcmil	694294
6	6	TERMINAL, compression, aluminum, 954 AAC	651224
7	12	BOLT ASSEMBLY, 2″x1/2″, stainless steel	782040
8	6	TAP, Ampact, per D14-1	651107
9	12	BOLT, machine, 5/8″x L, galvanized	780845E through 781046E
10	12	WASHER, square, curved, 4″x 4″	584775E
11	12	WASHER, split, lock, 5/8″	584260E
12	1	BOARD, number, SCL shop made per D8-10	–
13	1	HOLDER, switch tag	581799
14	2	PADLOCK, SNM-1	–
15	3′	CHAIN, weldless sash	726992
16	1	GROUND ROD, 5/8″x 8′	564238E
17	2	ANGLE CROSSARM BRACE, steel, 72″ X 22″ (centers)	563010E
18	2	CROSSARM BRACE, Aluminum, 5′	563013

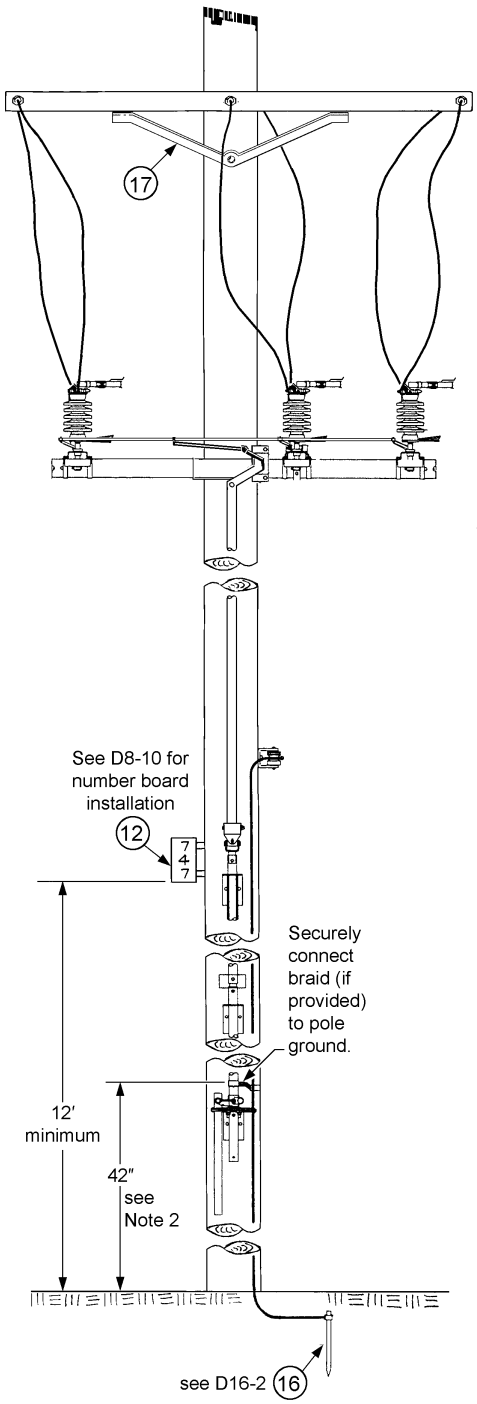

Alternate Underbuild Arrangement
Front View
Figure 2

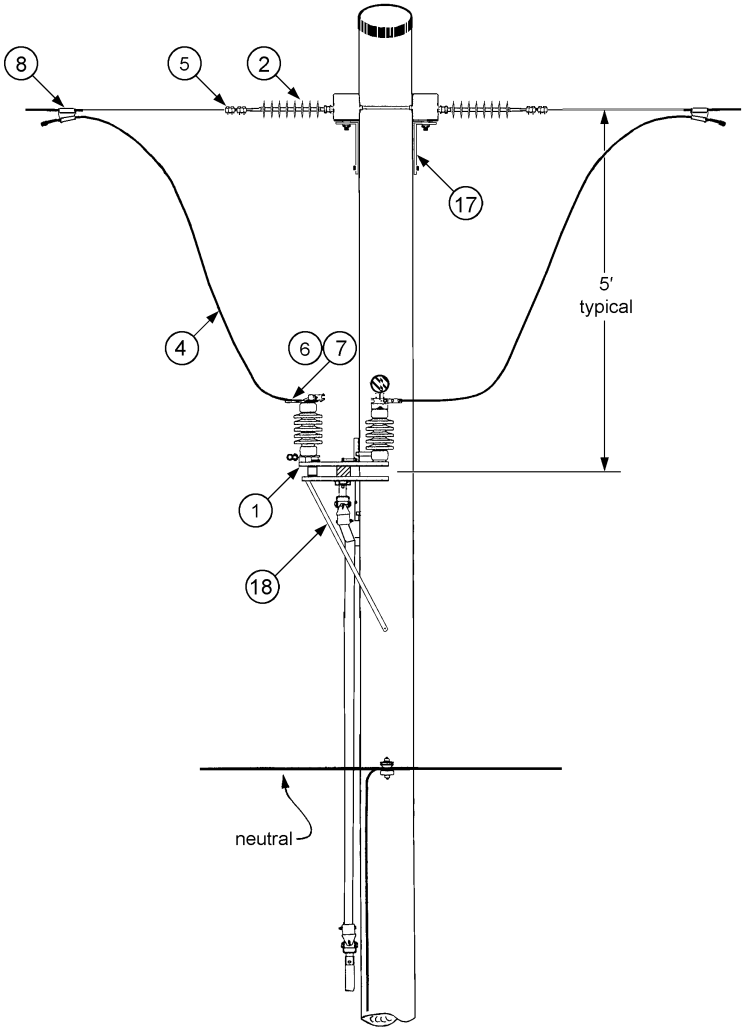

Alternate Underbuild Arrangement
Side View
Figure 3

Notes:

1. See erection drawing supplied with switch for switch and handle mounting details.
2. For S&C brand switches only: The distance from the centerline of the operating handle to the bottom of the switch crossarm must not exceed 48′ - 9-1/2″. To comply with this limit on taller poles, the operating handle shall be mounted higher than 42″ above ground, and the design engineer shall note on the Work Order that this switch must always be operated with a bucket truck. Generally speaking, this situation will occur with wood poles more than 60 feet in overall length.

26/34.5 kV VERTICAL SWITCH, 1200 AMP, 3 POLE, GANG OPERATED, FOR WOOD POLE MOUNTING, 1200 AMP CABLE TERMINATION

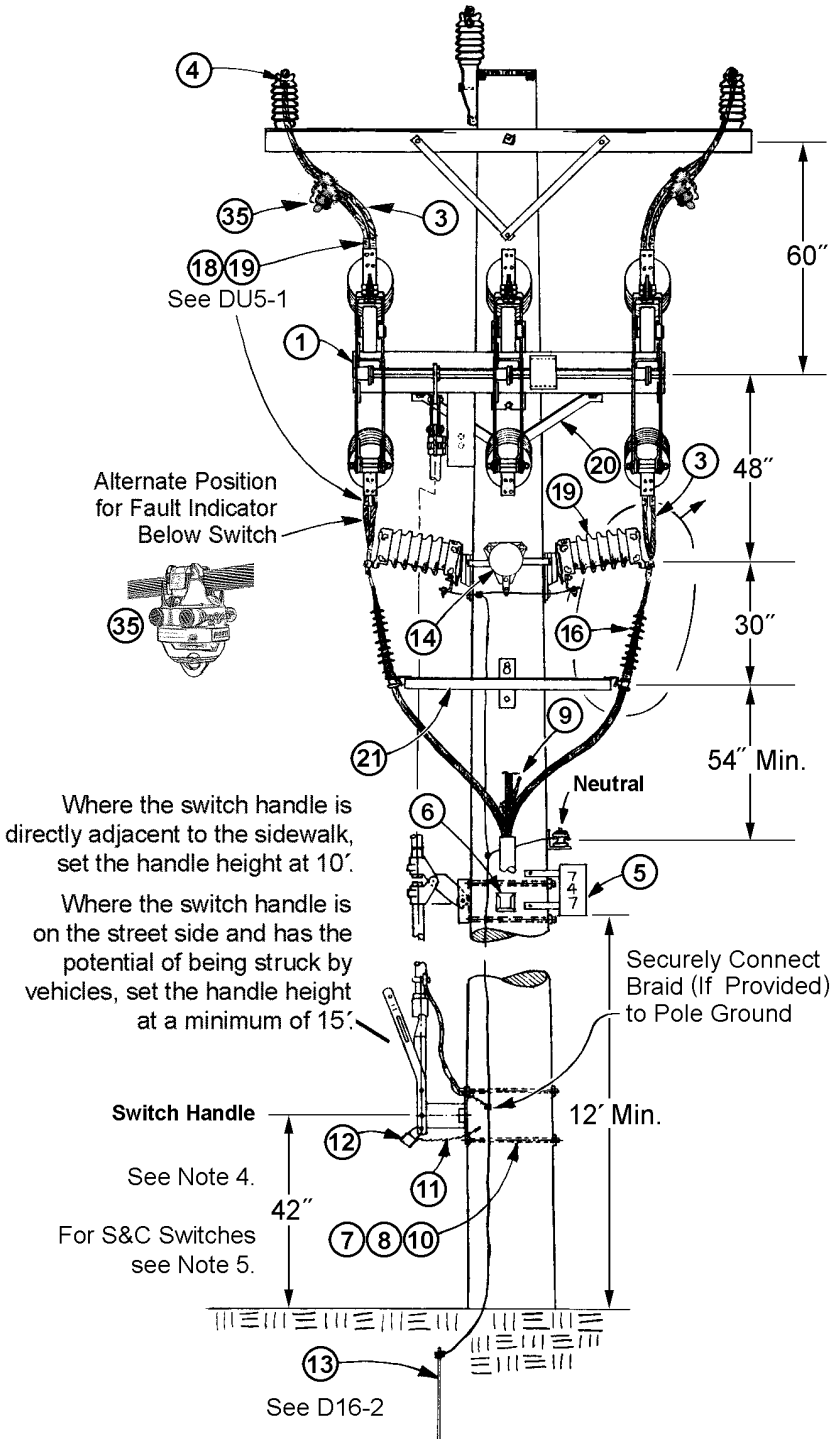

Figure 1

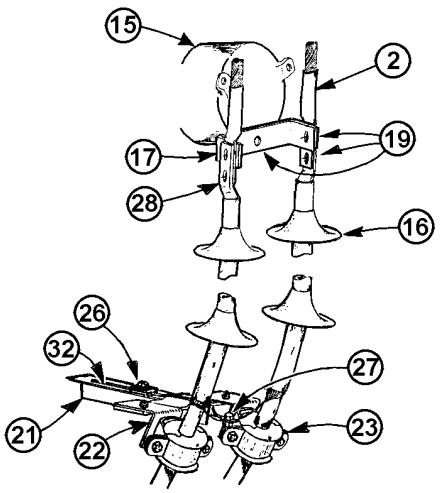

Figure 2, Terminator Detail

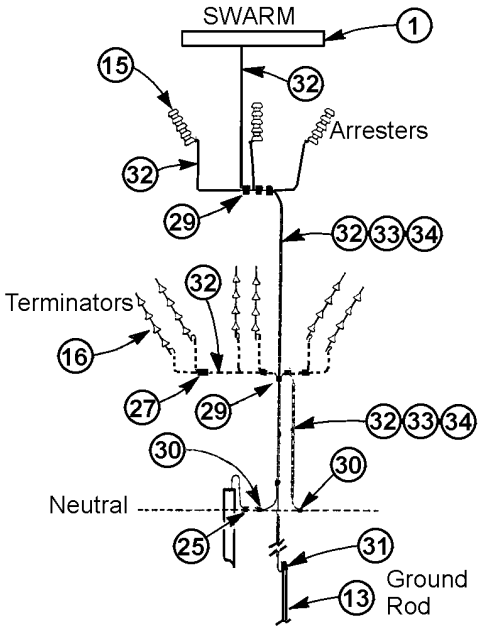

Figure 3, Grounding Diagram

STANDARDS COORDINATOR	STANDARDS SUPERVISOR	UNIT DIRECTOR
Charles L. Shaffer	John G. Skinner	Hardev Juj

Notes:

1. See erection drawing supplied with switch for switch and handle mounting details.
2. Rotate arresters on pole to provide clearance from switch handle.
3. Wire from top of switch to overhead conductors may be either 2 - 397.5 kcmil AAC or 1 - 954 kcmil AAC.
4. Where the switch handle will be directly adjacent to the sidewalk, set the handle height at 10 feet. Where the switch handle will be adjacent to the street and has the potential of being struck by vehicles, set the handle height at a minimum of 15 feet. Since a bucket truck will be required to operate the elevated switch handles, the design engineer shall note on the Work Order that this switch must always be operated with a bucket truck.
5. For S&C brand switches only: The distance from the centerline of the operating handle to the centerline of the switch base must not exceed 49′ – 3-3/4″. To comply with this limit on taller poles, the operating handle shall be mounted higher than 42″ above ground, and the design engineer shall note on the Work Order that this switch must always be operated with a bucket truck. Generally speaking, this situation will occur with wood poles more than 65 feet in overall length.

Material List

Item	Quantity	Description			Stock Number
1	1	SWITCH, 1200 amp, loadbreak			250153
2	6	TERMINAL, Compression, aluminum, 397.5 kcmil			651269
3	as required	WIRE	397.5 kcmil AAC (Canna)		600113
			954 kcmil AAC (Goldenrod)		600126
4	3 or 6	TAP, Ampact, per D14-1			–
5	1	NUMBER BOARD, SCL shop made per D8-10			–
6	1	SWITCH TAG HOLDER			581799
7	10	BOLT, Machine, galvanized, 5/8″ x L″			780845E thru 781046E
8	10	WASHER, Lock, split, 5/8″			584260E
9	2	GRIP, Cable Support, single eye, 3-1/2″ - 4″			763555
10	10	WASHER, Square, curved, 4″ x 4″			584775E
11	3′	CHAIN, weldless sash			726992
12	2	PADLOCK, SNM-1			–
13	1	GROUND ROD, 5/8″ x 8′			564238E
14	1	BRACKET, arrester mounting			720641
15	3	LIGHTNING ARRESTER, intermediate class			680121
16	6	TERMINATOR, cold shrink, 750 to 1000 kcmil			012126
17	3	BRACKET, arrester to cable			563226
18	12 or 9	CONNECTOR, compression, aluminum	397.5	kcmil	650267
			954	kcmil	651224
19	27	BOLT ASSEMBLY, aluminum, 1/2″ x 2″			782051
20	1	ANGLE BRACE, Chance 6940 or McGraw DBIL2			–
21	1	BRACKET, Terminator Mounting			686835
22	3	BRACKET, Terminator Support			686466
23	6	INSULATOR, Cable Support			690770
25	2	CONNECTOR, Tap, "C" type, 4/0 to 4/0			651091
26	3	CONNECTOR, cable to flat			676674
27	3	TAP, Split Bolt, #4			668864E
28	6	CONNECTOR, Compression, copper, 1000 kcmil			651295
29	5	CONNECTOR, Crimpet, copper to copper			677323E
30	2	CONNECTOR, aluminum to copper, 4/0 to #4			651099
31	1	CLAMP, Ground Rod, 5/8″			564012E
32	as required	WIRE, #4 copper, solid, poly			611442
33	as required	MOULDING, plastic, 1/2″ x 8′			582060E
34	as required	STAPLES, galvanized, 1/2″			583200E
35	3	FAULT INDICATOR, 1Ø, OH, strobe, hot stick installed			765872

26 kV CIRCUIT BREAKER

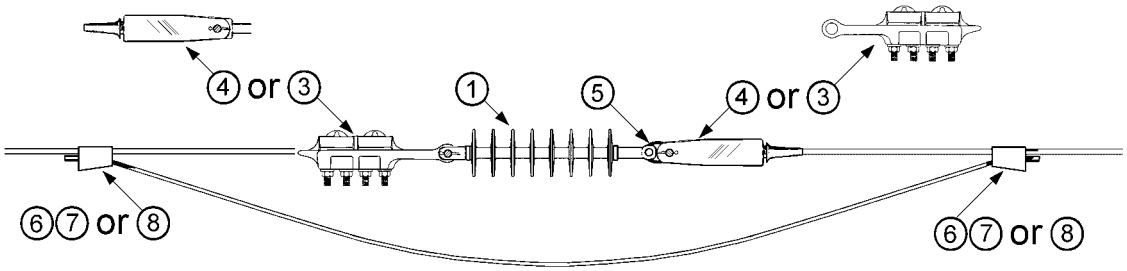

Preferred Method

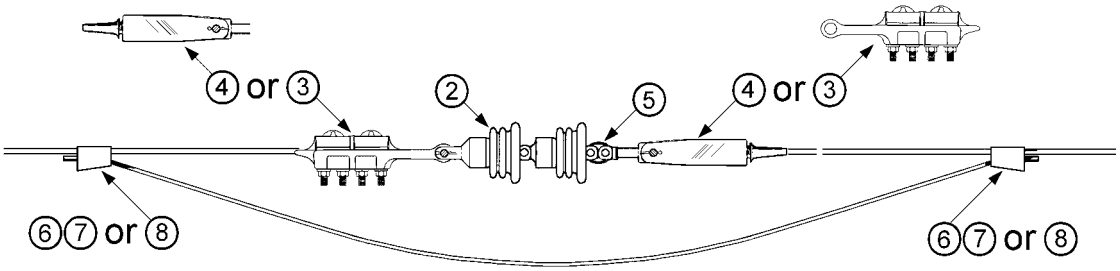

Alternate Method

MATERIAL LIST

Item	Quantity	Description		Stock No.
1	1	Insulator, Suspension, Polymer		690233
2	2	Insulator, Suspension, Ceramic		690208
3	2	Clamp, deadend, strain	3/0-477	694292
		For AAC & ACSR	795-954	694294
4	2	Deadend, automatic feedthrough	#4	581332E
		For copper cables only	#2	581333
			2/0	581334
			4/0	581335
			300	581337
5	1	Link, galvanized		696195
6	2	Tap, compression, "C" type, Ampacts		See D14-1
7	2	Clamp, hot line tap, Cu	#8-2/0	580725E
			4/0-#6	580727
8	2	Connector, two bolt, Cu	2/0 (Max)	669379E
		For copper cables only	4/0 (Max)	669380E
			350 (Max)	669381E

ORIGINATOR	STANDARDS COORDINATOR	STANDARDS SUPERVISOR	UNIT DIRECTOR
Jim S. Horn	Charles L. Shaffer	John Skimmer	Harden Jay

COMMON SECONDARY NEUTRAL DEADENDING DETAILS FOR ALUMINUM NEUTRAL CONDUCTOR

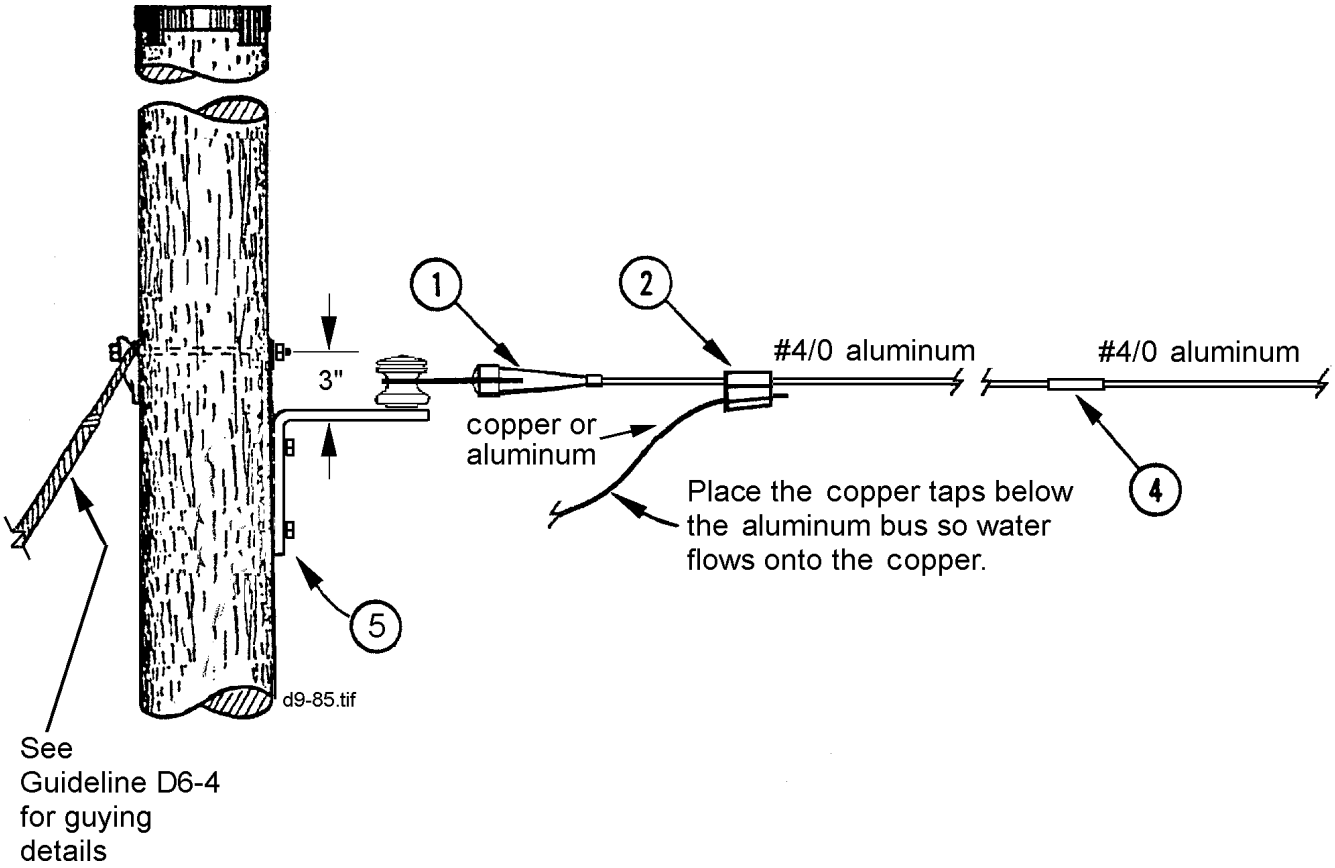

BILL OF MATERIAL

ITEM	QUANTITY	DESCRIPTION	STOCK NO.
1	as req'd.	DEADEND, 4/0 Al.	581304E
2	as req'd.	CONNECTOR, Tap, Parallel, Ampact	651091 thru 651095
4	as req'd.	SPLICE, Full Tension, Versa-Crimp	650174
5	1	BRACKET, Secondary, w/ insul.	690404E

ORIGINATOR	STANDARDS COORDINATOR	STANDARDS SUPERVISOR	UNIT DIRECTOR
Jim S. Horn	Charles L. Shaffer	John C. Skinner	Betty Robin

RACK SECONDARY CORNER DETAILS

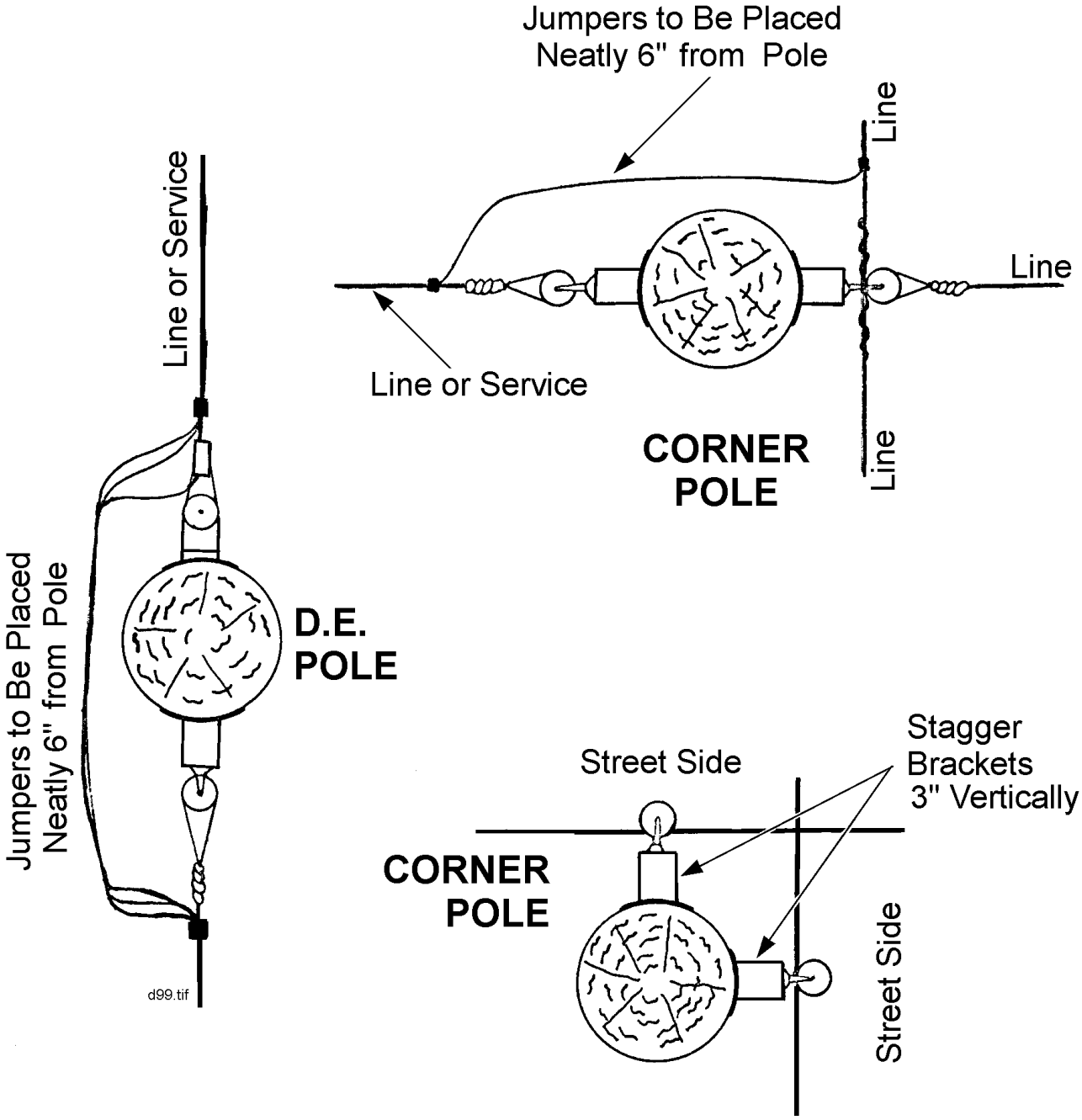

ORIGINATOR	STANDARDS COORDINATOR	STANDARDS SUPERVISOR	UNIT DIRECTOR
Jim S. Horn	Charles L. Shaffer	John C. Skinner	Betty Robin

26 kV DEADENDS

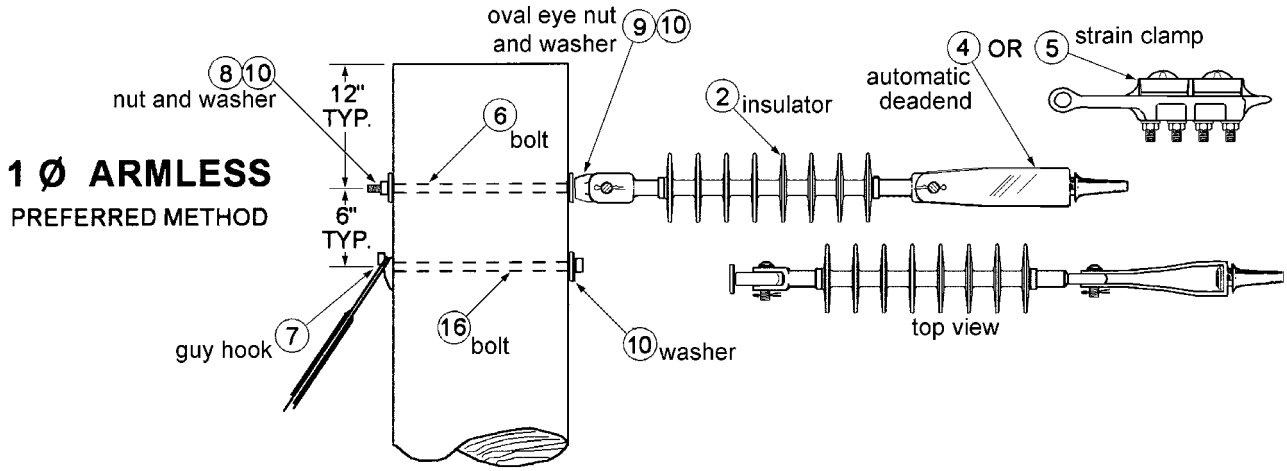

For salt spray areas, see the second alternate method on page 2.

MATERIAL LIST

Item	Quantity	Description		Stock Number
1	2 or 3	Insulator, Suspension, Porcelain		690208
2	1	Insulator, Deadend, Composite, 21"		690233
3	1	Eyebolt, 5/8" x Length		561110 thru 561122
4	1	Deadend, Automatic Feedthrough – Cu.	#4	581332E
			#2	581333
			#2/0	581334
			#4/0	581335
			300	581337
5	1	Clamp, Deadend - Strain	#3/0 - 477	694292
		For ASCR and AL Wire	795 - 954	694294
6	1	Bolt, Double Arming, 5/8" x Length		560518E thru 560530E
7	1	Hook, Guy, Spur Type		565195E
8	1 or 2	Washer, Coiled, Helical Spring Lock		584267E
9	1	Nut, Oval Eye - 5/8"		565252E
10	1 or 2	Washer, Flat 2 1/4" x 2 1/4"		585135E
11	1	Nut, Clevis 5/8"		565280
16	1	Bolt, 3/4" x Length		780875E thru 780880E

ORIGINATOR	STANDARDS COORDINATOR	STANDARDS SUPERVISOR	UNIT DIRECTOR
Bill Challender	Charles L. Shaffer	John Schimmer	Hardie Frye

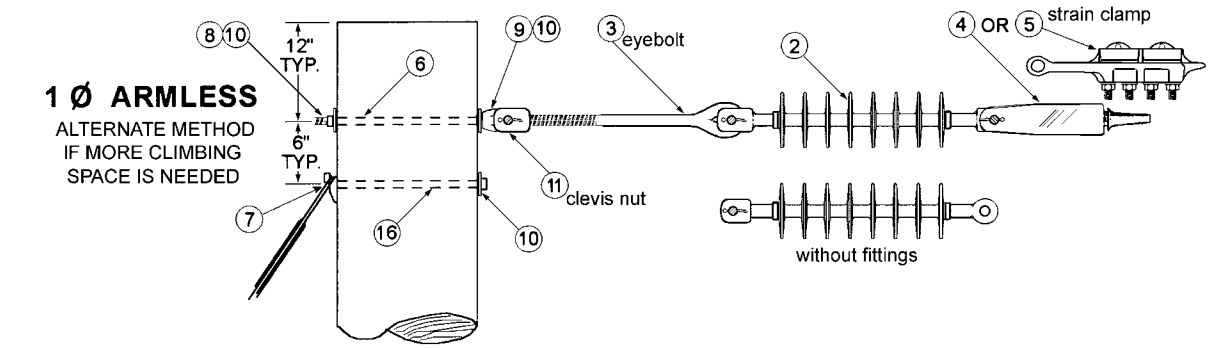

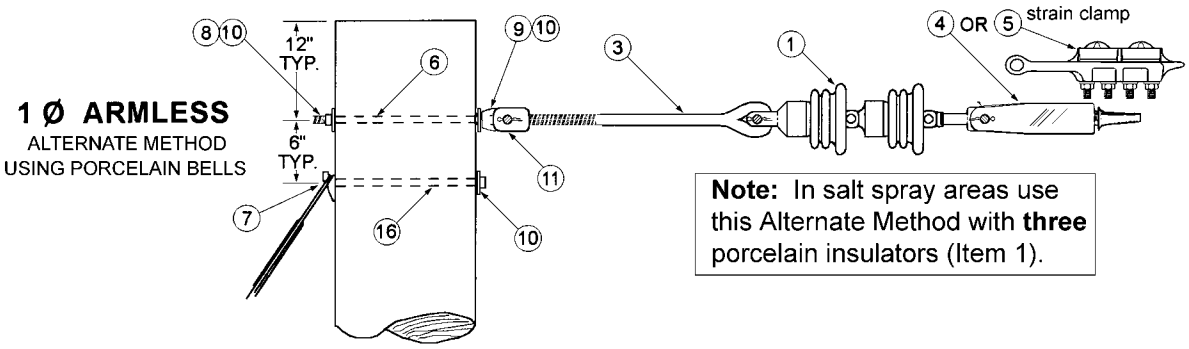

Note: In salt spray areas use this Alternate Method with **three** porcelain insulators (Item 1).

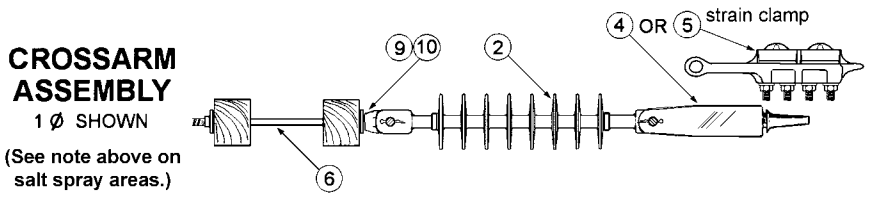

Note: Use double deadend and guys on each side of river and freeway crossings.

MATERIAL LIST

Item	Quantity	Description		Stock Number
1	2 or 3	Insulator, Suspension, Porcelain		690208
2	1	Insulator, Deadend, Composite, 21"		690233
3	1	Eyebolt, 5/8" x Length		561110 thru 561122
4	1	Deadend, Automatic Feedthrough – Cu.	#4	581332E
			#2	581333
			#2/0	581334
			#4/0	581335
			300	581337
5	1	Clamp, Deadend - Strain	#3/0 - 477	694292
		For ASCR and AL Wire	795 - 954	694294
6	1	Bolt, Double Arming, 5/8" x Length		560518E thru 560530E
7	1	Hook, Guy, Spur Type		565195E
8	1 or 2	Washer, Coiled, Helical Spring Lock		584267E
9	1	Nut, Oval Eye - 5/8"		565252E
10	1 or 2	Washer, Flat 2 1/4" x 2 1/4"		585135E
11	1	Nut, Clevis 5/8"		565280
16	1	Bolt, 3/4" x Length		780875E thru 780880E

4/0 PARALLEL CABLE

MIDSPAN TAP DETAILS

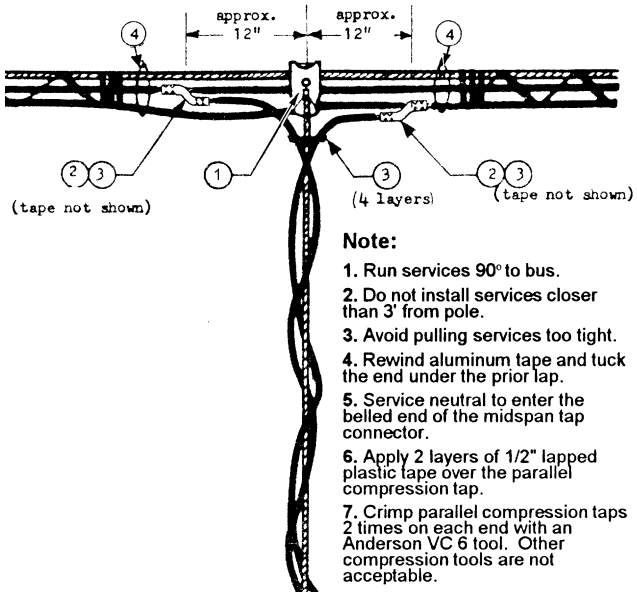

Note:

1. Run services 90° to bus.
2. Do not install services closer than 3' from pole.
3. Avoid pulling services too tight.
4. Rewind aluminum tape and tuck the end under the prior lap.
5. Service neutral to enter the belled end of the midspan tap connector.
6. Apply 2 layers of 1/2" lapped plastic tape over the parallel compression tap.
7. Crimp parallel compression taps 2 times on each end with an Anderson VC 6 tool. Other compression tools are not acceptable.

MATERIAL LIST

Item	Qty	Description	Stock No.	Mfg. Cat. or Matl. Spec
1	1	Tap, Bolted, Neutral Midspan 1/0-3/0	651110	Alcoa # 206
2	2	Tap, AMPACT, 4/0 to #2, Tap, AMPACT, 4/0 to 1/0	651090 651102	--------- ---------
3	As Reqd	Tape, Plastic Electrical	736655E	Matl. Spec. 7366.5
4	2	Strap, Tie, Plastic, 14", 120lb, Blk.	735811E	Matl. Spec. 7358.1

SPLICE

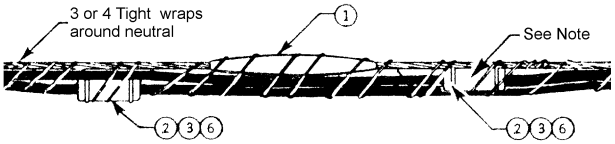

Under Local Distribution

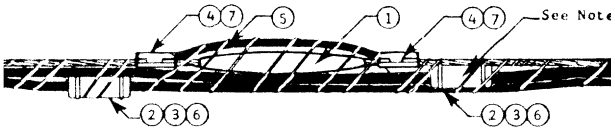

Neutral Shunt Under Main Line Feeder Only

Note: Use one layer insulating and waterproofing putty tape. Form putty tape around connector. Install polyethylene cover over the insulated splice for mechanical protection.

MATERIAL LIST

Item	Qty.	Description	Size	Stk No.
1	1	Splice, Automatic Guy Strand	7/16"	565338
2	2	Connector, Alum. Compression	4/0	650104E
3	2	Cover, Heat Shrink Tubing		737450E
4	2	Connector, Alum. Compression Tap	4/0	677332E
5	As Reqd	4/0 Insul. Alum. Scrap from Triplex	4/0	600669
6	As Reqd	Tape, Insul. & Warterproofing Putty		736470E
7	As Reqd	Tape, Plastic Insulating		736655E

DEAD END DETAIL

MATERIAL LIST				
ITEM	QTY	DESCRIPTION	SIZE	STOCK NO.
1	1	Alumaweld Guy Wire Grip	7/16"	565124E
2	1	Alumaweld Guy Dead End	7/16"	565051
3	As Reqd	Alumaweld Guy Wire	20M	566408
4	2	Guy Hook		565195E
5	1	Bolt	3/4"x-L	780875E to 780878E
6	As Reqd	Tape, Plastic Electrical		736655E

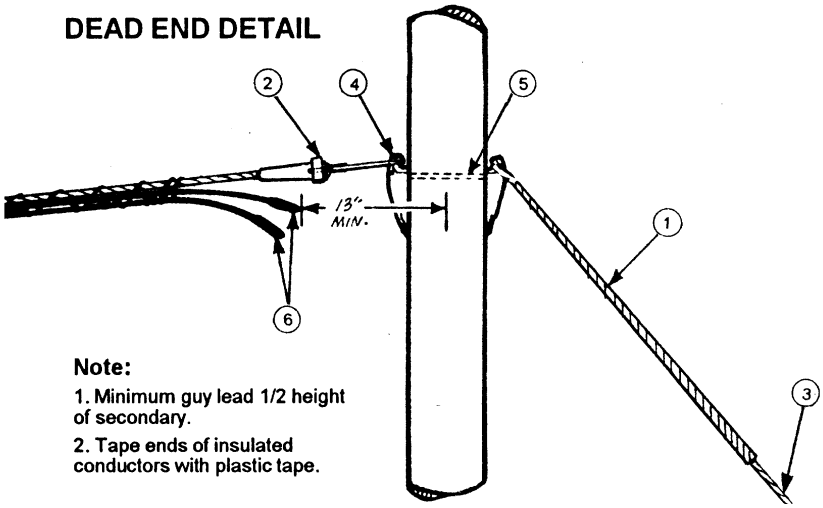

Note:

1. Minimum guy lead 1/2 height of secondary.
2. Tape ends of insulated conductors with plastic tape.

ORIGINATOR	STANDARDS COORDINATOR	STANDARDS SUPERVISOR	UNIT DIRECTOR
Jim S. Horn	Charles L. Shaffer	John C. Skinner	Betty Robin

26 KV CONSTRUCTION FOR 954 RAIL

Procedure:

Install double deadend every five spans to allow for future construction/maintenance of circuit. Avoid double deadending on corner poles if possible. For 2 or more gains of 954 kcmil wire a minimum of 7 feet (10 feet preferable) between gains is required.

Notes:

1. With triple arm use 20M pole guy. When using double arm use 10M arm guys, one per phase.
2. Use one V- brace on face of arm. (No V- brace on back of arm.)
3. For contaminated areas use 46 kV insulator Stk. No. 690163 in place of Item 1.
4. Use double deadend and guys on each side of river and freeway crossings.
5. For two gains, offset the center phases on opposite sides of the pole (to increase working clearance) as shown in the sketch.

Material List

Item	Description	Stock No.
1	Insulator, Vertical Post, Clamp Top	690159
2	Clamp, Vertical Post Insulator	695196
3	Nut, Eye, 5/8"	565252E
4	Insulator, Composite Suspension, 21"	690233
6	Clamp, Strain, 954 kcmil	694294
7	Insulator Bracket	563253
8	Tap, Compression, Ampact, 954 - 954	651107
9	954 ACSR	600044
10	954 AAC	600126
11	Crossarm, 10 Ft. Feeder	540146
12	V- brace. Crossarm	563010
13	Nut, Strand Eye, 3/4"	565260E
14	Deadend, Automatic for 20M Guy Wire	565051
15	Wire, Guy Strand, 20M	566408

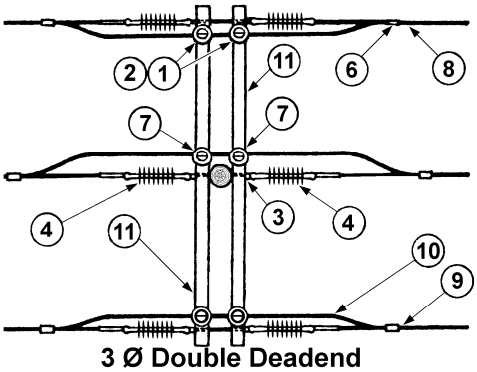

3 Ø Double Deadend

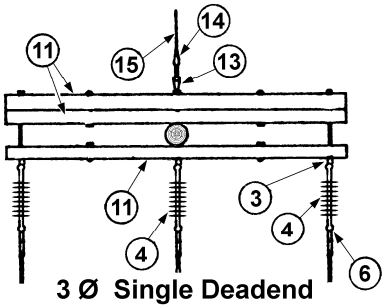

3 Ø Single Deadend

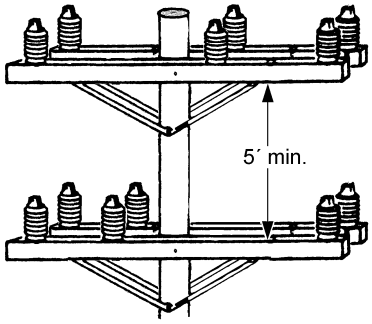

Two Gains

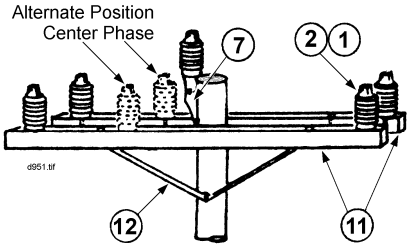

Tangent Pole

standards coordinator	standards manager	unit director
John Shipek	John Shipek	Pamela S. Johnson

15/26 KV DISTRIBUTION CROSSARM DETAILS

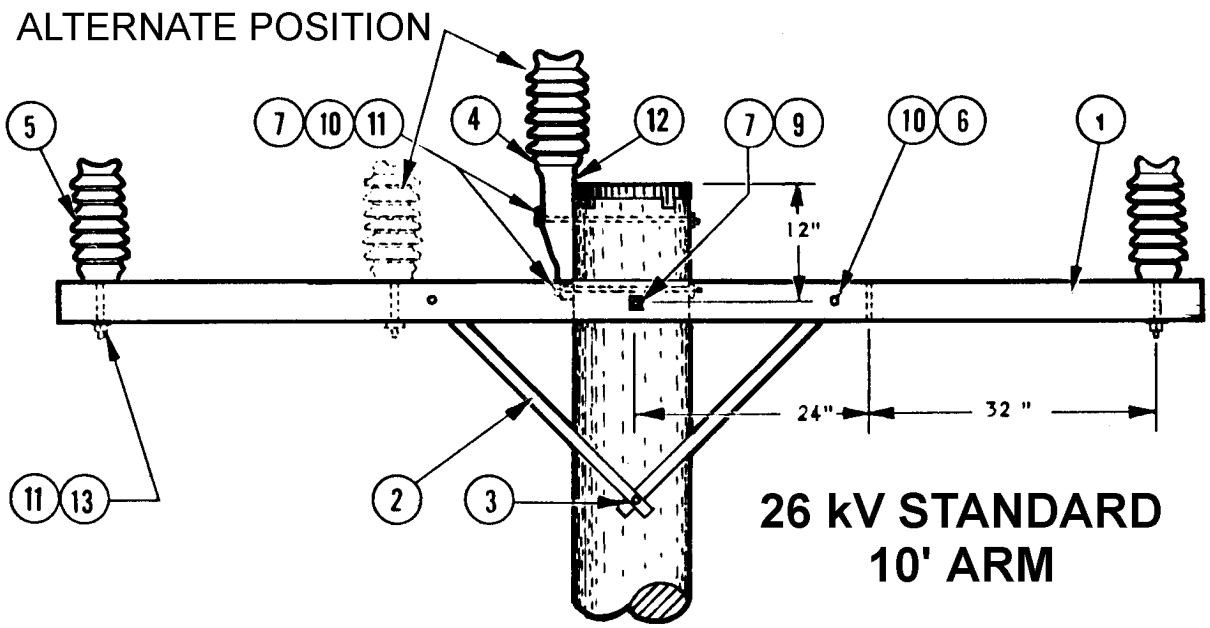

MATERIAL LIST

Item No.	Description	Size	Stock No.
1	Arm, 8 Pin, 26 kV	10'-0"	540220
2	Brace	32"	563005
3	Screw, Galv. Lag	1/2" X 4"	785261E
4	Insulator, Bracket		563253
5	Insulator	34.5 kV	690157
6	Bolt, Galv. Mach.	1/2" x 5"	780804E
7	Bolt, Galv. Mach.	5/8" x L	As Spec.
8	Bolt, Double Arming	5/8" x L	As Spec.
9	Washer	2-1/4" Square	585135E
10	Washer	1/2" Round	585025E
11	Washer, Spring	3/4" Coiled	584267E
12	Stud, Short	3/4" x 1-3/4"	696826E
13	Stud, Long	3/4" x 7"	696828E
14	Washer, Spring	5/8"	584261E

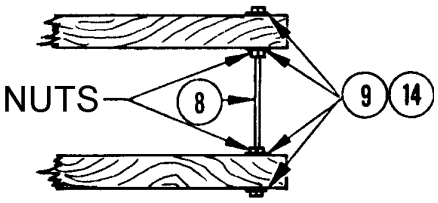

TYPICAL DOUBLE ARM

NOTES:
Max. conductor side pull is 300 lbs.

standards coordinator	standards manager	unit director
John Shipek	John Shipek	Pamela S. Johnson

SEATTLE CITY LIGHT

CONSTRUCTION GUIDELINE

STANDARD NUMBER: **D9-53.1**
PAGE: 1 of 1
DATE: November 14, 1962
REV: February 8, 1999

26 KV HORIZONTAL POST CONSTRUCTION

VERTICAL CONFIGURATION

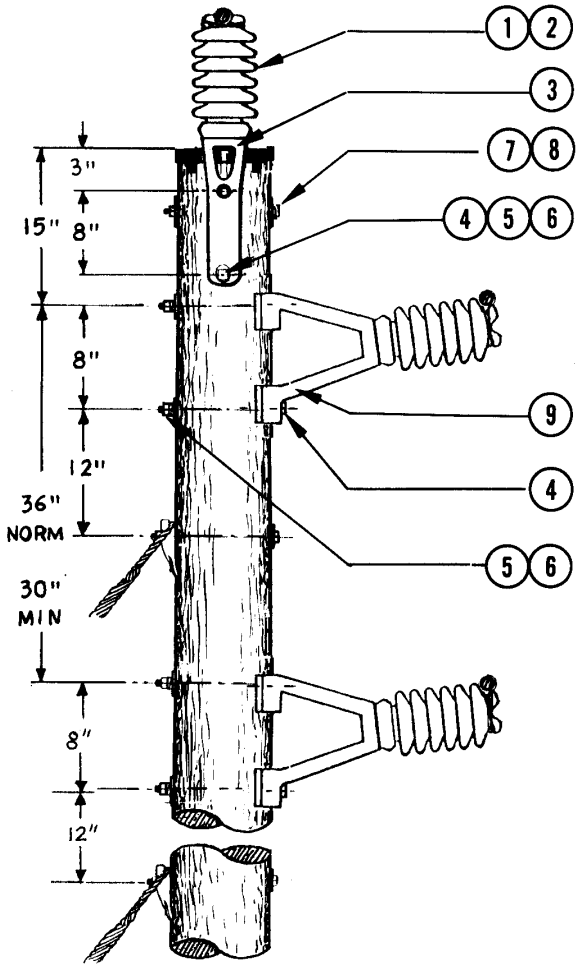

TRIANGULAR CONFIGURATION

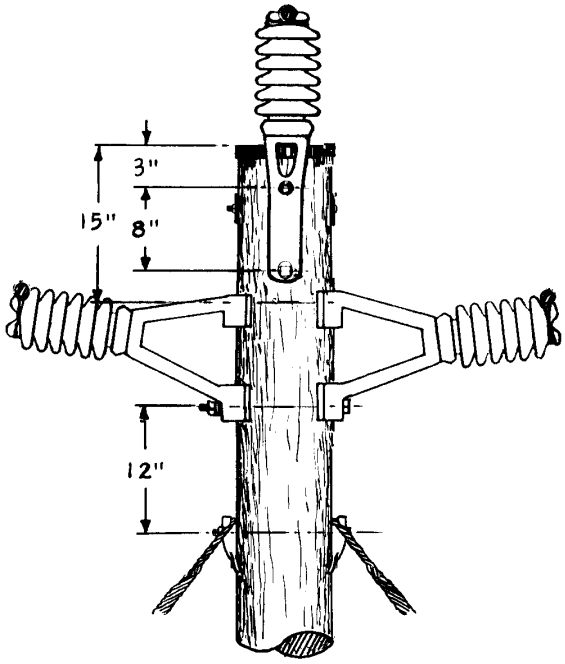

NOTE:
Items 7 and 8 needed only when line angle exceeds 5 degrees. See Guideline D6-4 for guying details.

MATERIAL LIST

ITEM	REQ'D VERTICAL	REQ'D TRIANGULAR	DESCRIPTION	STOCK NO.
1	3	3	Insulator, line post	690157
2	3	3	Stud, insulator, 3/4" x 1-3/4"	696826E
3	1	1	Bracket, galv, pole top post-ins.	563253
4	6	4	Bolt, mach., galv, 5/8" x L	780840E to 780847E
5	6	2	Washer, 2-1/4" x 2-1/4" flat	585135E
6	6	4	Washer, 3/4" coil spring lock	584267E
7	2	2	Washer, 3" x 3" flat	584945E
8	1	1	Bolt, Mach, Galv, 1/2" x L	780810E to 780817E
9	2	2	Bracket, insulator pin	580510

ORIGINATOR	STANDARDS COORDINATOR	STANDARDS SUPERVISOR	UNIT DIRECTOR
Jim S. Horn	Charles L. Shaffer	John C. Skinner	Betty Robin

SEATTLE CITY LIGHT

CONSTRUCTION GUIDELINE

STANDARD NUMBER: **D9-54**
PAGE: 1 of 1
DATE: August 6, 1970
REV: February 8, 1999

TYPICAL 26 KV FLYING TAP

POLE LOCATIONS

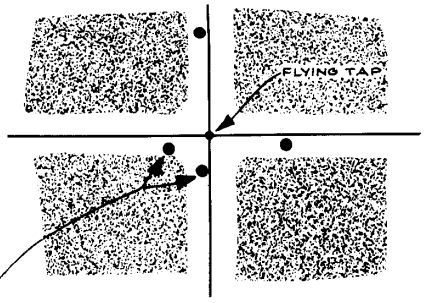

Poles are to be located near the corner. A maximum distance of 50 feet from tap.

TYPICAL POLE

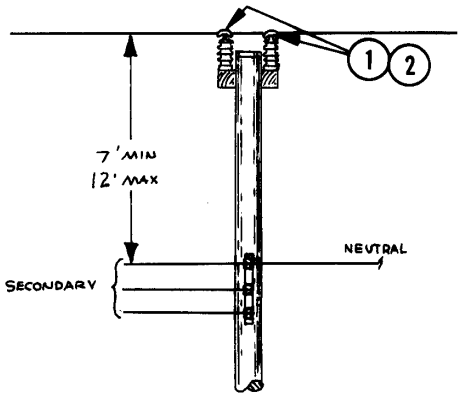

FLYING TAP, CROSS SECTION

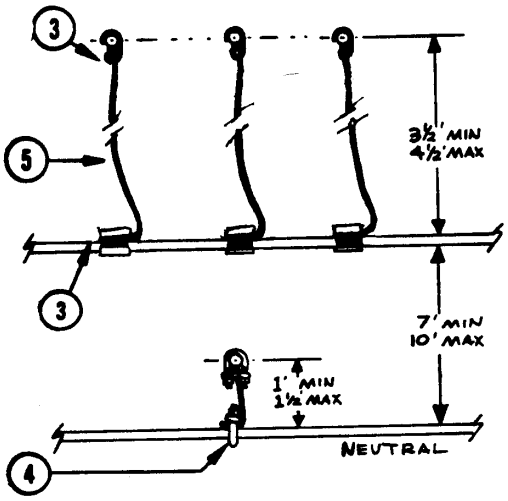

NOTES

1. The secondary neutral shall be the only conductor crossing in the secondary space.
2. For 954 kcmil Rail conductor, install double arms and clamp top insulators as per Standard D9-52 using the alternate insulator position (no headpin). For 397 kcmil and smaller conductor, use single arms and tie top post insulators.
3. Double deadending may be substituted for insulator clamps.

MATERIAL LIST

ITEM	QTY	DESCRIPTION	STOCK NO.	APPLICATION
1	24*	Insulator, clamp top	690159	954 kcmil conductor only
1	24*	Insulator, line top	690157	397 & smaller conductor
2	24*	Clamp, line post	695194	954 kcmil conductor only
3	6	Tap, compression "C" type	651090 thru 651109	All except #2 or #4 bare Cu
3	6	Hot line clamp	580725E	#2 or #4 bare Cu
4	2	Connector	As Req'd	
5	15'	Wire	As Req'd	

*These quantities are for new work with both lines the same conductor size. Adjust quantities for rework or when both lines are not the same conductor size.

ORIGINATOR	STANDARDS COORDINATOR	STANDARDS SUPERVISOR	UNIT DIRECTOR
Jim S. Horn	Charles L. Shaffer	John C. Skinner	Betty Robin

26 KV CORNER CONSTRUCTION
3 – ARM DOUBLE CIRCUIT

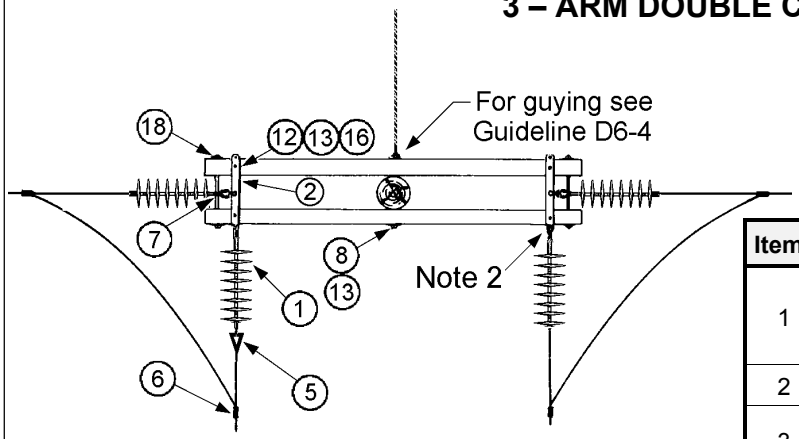

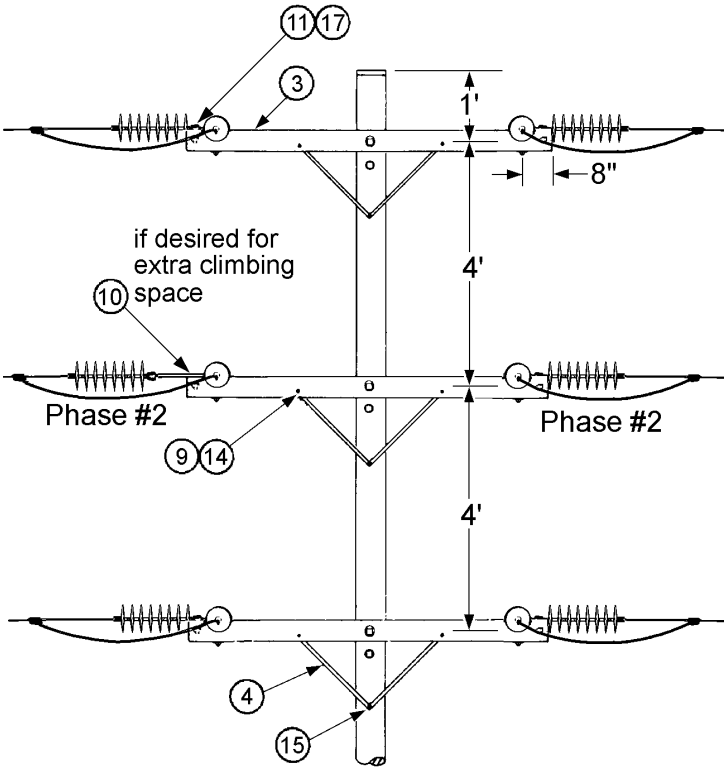

Item	Qty.	Description	Size, Inches	Stock No.
1	12	Insulator, Deadend, Composite	21	690233
2	6	Deadend Plate	–	582665
3	6	Crossarm, Feeder	–	540146
4	12	Brace, Flat	32	563005E
5	12	Deadend	–	As Spec.
6	12	Tap, Compression	–	As Spec.
7	6	Bolt, Double Arming with Nuts	5/8 x L	As Spec.
8	3	Bolt, Galvanized, Machine	5/8 x L	As Spec.
9	12	Bolt, Galvanized, Machine	1/2 x 6	780806E
10	6	Bolt, Eye	5/8 x 12	561112E
11	6	Nut, Oval Eye	5/8	565252E
12	12	Bolt, Galvanized, Machine	5/8 x 8	780840E
13	42	Washer	2-1/4 x 2-1/4	585135E
14	12	Washer	1/2 Round	585025E
15	6	Screw, Lag	1/2 x 4	785261E
16	12	Washer, Spring Lock	3/4	584267E
17	6	Anchor Shackle	1/2	696603
18	12	Washer, Spring, Galvanized	5/8	584261E

NOTE:
1. Phase #2 must take middle position to maintain mid-span separation, roll all phases same direction.

ORIGINATOR	STANDARDS COORDINATOR	STANDARDS SUPERVISOR	UNIT DIRECTOR
Jim S. Horn	Charles L. Shaffer	John C. Kimmer	Harden Jay

26KV HEADPIN PRIMARY AND LR SECONDARY CONSTRUCTION

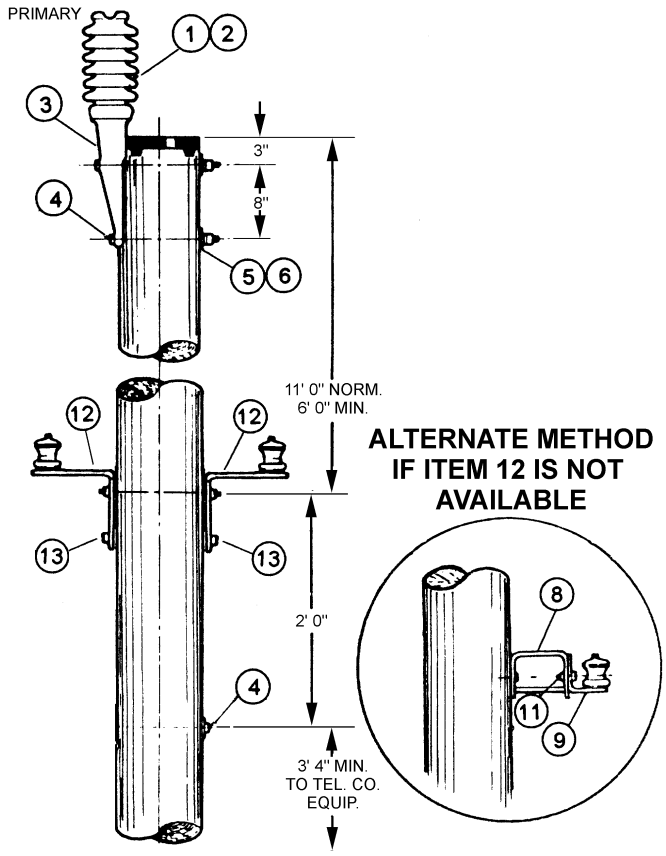

PROCEDURE:

1. Determination of LR location (Item 12).
   A. On conversion work, place LR on street side.
   B. LR to be placed to fit field conditions, such as sharp angles, bolted telephone cables on side of pole, streetlight, etc.
   C. Adequate and clear climbing space must be maintained.
2. A duplicate neutral is used on radial (lateral) leads only and ties to the common neutral at the remote end.
3. At the feed point the duplicate neutral must tie separately to either the primary or main secondary neutral. The primary and secondary neutrals must be bonded together.

MATERIAL LIST

Item	Req'd	Description	Stock
1	1	INSULATOR, Line-Post	690157
2	1	STUD, Insulator	696826E
3	1	BRACKET, Galv. Pole Top	563253
4	3	BOLT, 5/8" Galv.	780840E Thru 780847E
5	3	WASHER, 2-1/4" X 2-1/4"	585135E
6	2	WASHER, 3/4" Coil Spring Lock	584267E
8	as req'd	BRACKET, Extension	580505E
9	as req'd	BRACKET, Sec. Spool Insulator	690402E
11	as req'd	BOLT, 5/8" X 2", ASTM 307	780827E
12	2	BRACKET, Sec. Spool insul., Large	690404E
13	2	SCREW, Lag, 1/2"	785259E

ORIGINATOR	STANDARDS COORDINATOR	STANDARDS SUPERVISOR	UNIT DIRECTOR
Jim S. Horn	Charles L. Shaffer	John C. Kimmes	Hardie Jay

POLE SPACING - VIEW PROBLEM FOR 40' POLE

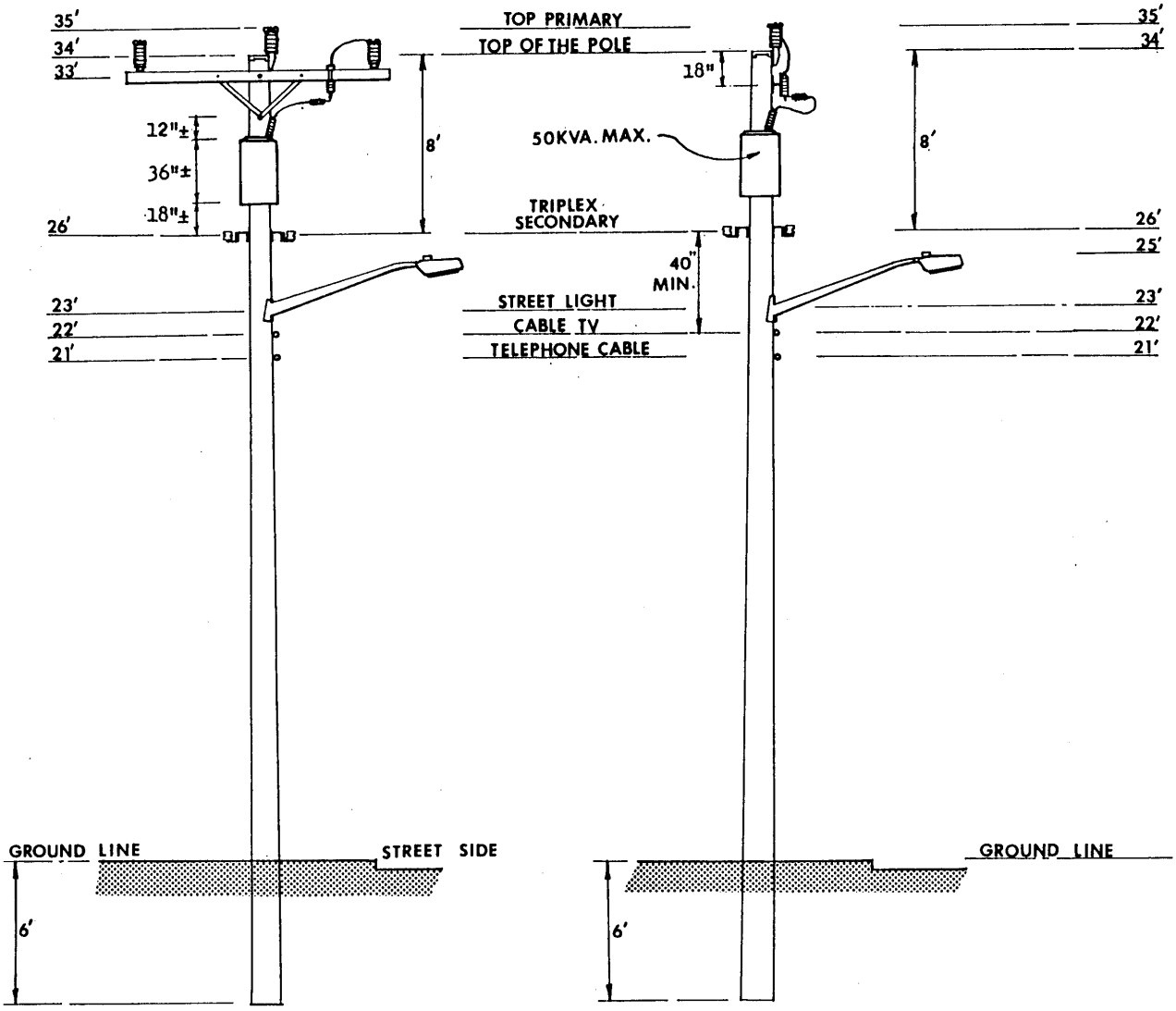

TYPICAL 40' POLE WITH 3 CONDUCTORS

TYPICAL 40' POLE WITH 1 CONDUCTOR

REFERENCE: D 2 - 3
D 9 - 52
D 9 - 58
D 10- 3.1
D12-11

NESC-1997 (IEEE/ANSI C2-1997)

d9-59.tif

ORIGINATOR	STANDARDS COORDINATOR	STANDARDS SUPERVISOR	UNIT DIRECTOR
Jim S. Horn	Charles L. Shaffer	John Skinner	Betty Robin

15/26 kV DISTRIBUTION
SINGLE PHASE CORNER CONSTRUCTION
From Three Phase Lead

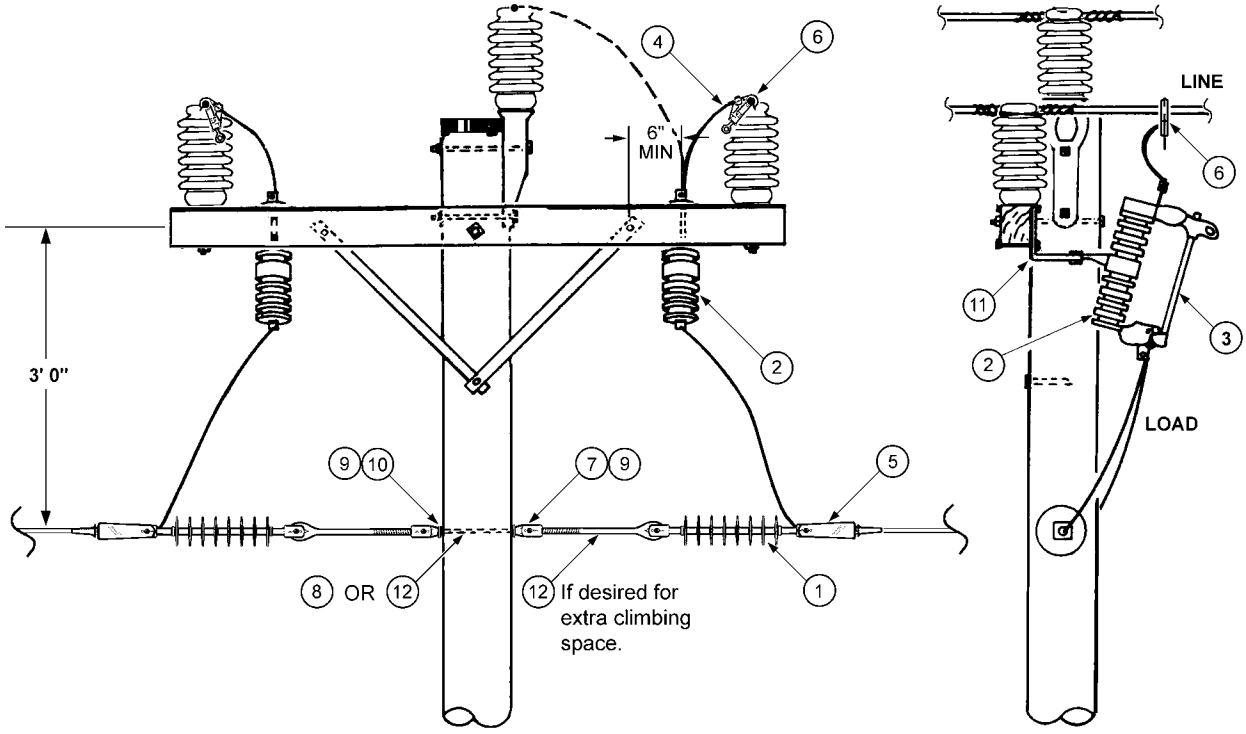

d9-60a.tif

MATERIAL LIST FOR POLE MOUNTED DEADEND TAP

Item	Quantity	Description		Stock Number
1	2	INSULATOR, Composite, Deadend, 21”		690233
2	2	CUTOUT, 27 kV, Ultra Heavy Duty		682099
3	2	FUSE, “K” link, Size as Required		683713E to 683724E
4	16’	WIRE, #4 Cu. Solid Bare, Soft Drawn		610208
5	2	DEADEND, Auto, #4 Cu. Solid		581332E
6	2	CLAMP, Hot line, Copper	2/0 to #8	580725E
			400 to #6	580727
		STIRRUP for Aluminum (For Al-Cu, see D14-6)	397.5 to 954	580678
7	1	NUT, Eye, 5/8”		565252E
8	1	BOLT, Machine, Galvanized, 5/8” x L		780844E to 780850E
9	2	WASHER, Plate, Galvanized, 2-1/4” x 2-1/4”		585135E
10	1	WASHER, Coiled Spring, 5/8”		584261E
11	2	BRACKET, Cutout Mounting. Crossarm		682097
12	As Req.	BOLT, Eye, Galvanized, 5/8” x L		561110 to 561122

ORIGINATOR	STANDARDS COORDINATOR	STANDARDS SUPERVISOR	UNIT DIRECTOR
Jim S. Horn	Charles L. Shaffer	[illegible]	Harden Jay

15/26 kV DISTRIBUTION SINGLE PHASE CORNER CONSTRUCTION
From Three Phase Lead

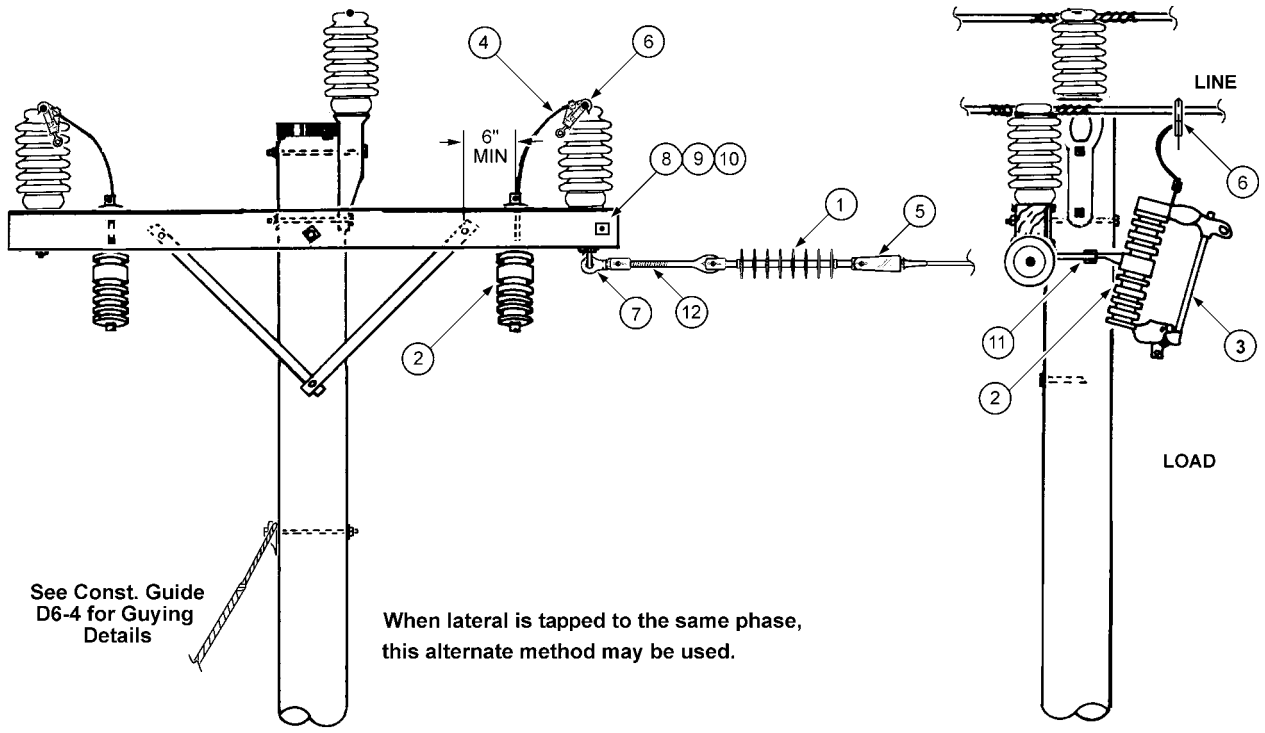

d9-60b.tif

MATERIAL LIST FOR ARM MOUNTED DEADEND TAP - EYE NUT IN INSULATION STUD

Item	Quantity	Description		Stock Number
1	1	INSULATOR, Composite, Deadend, 21”		690233
2	1	CUTOUT, 27 kV, Ultra Heavy Duty		682099
3	1	FUSE, “K” link, Size as Required		683713E to 683724E
4	8’	WIRE, #4 Cu. Solid Bare, Soft Drawn		610208
5	1	DEADEND, Auto, #4 Cu. Solid		581332E
6	1	CLAMP, Hot line, Copper	2/0 to #8	580725E
			400 to #6	580727
		STIRRUP for Aluminum (For Al-Cu, see D14-6)	397.5 to 954	580678
7	1	NUT, Eye, 5/8”		565252E
8	1	BOLT, Machine, Galvanized, 5/8” x 6”		780836E
9	2	WASHER, Plate, Galvanized, 2-1/4” x 2-1/4”		585135E
10	1	WASHER, Coiled Spring, 5/8”		584261E
11	1	BRACKET, Cutout Mounting, Crossarm		682097
12	1	BOLT, Eye, Galvanized, 5/8” x L		561110 to 561122

15/26 KV DISTRIBUTION
CORNER POLE DETAILS 3Ø BOTH WAYS

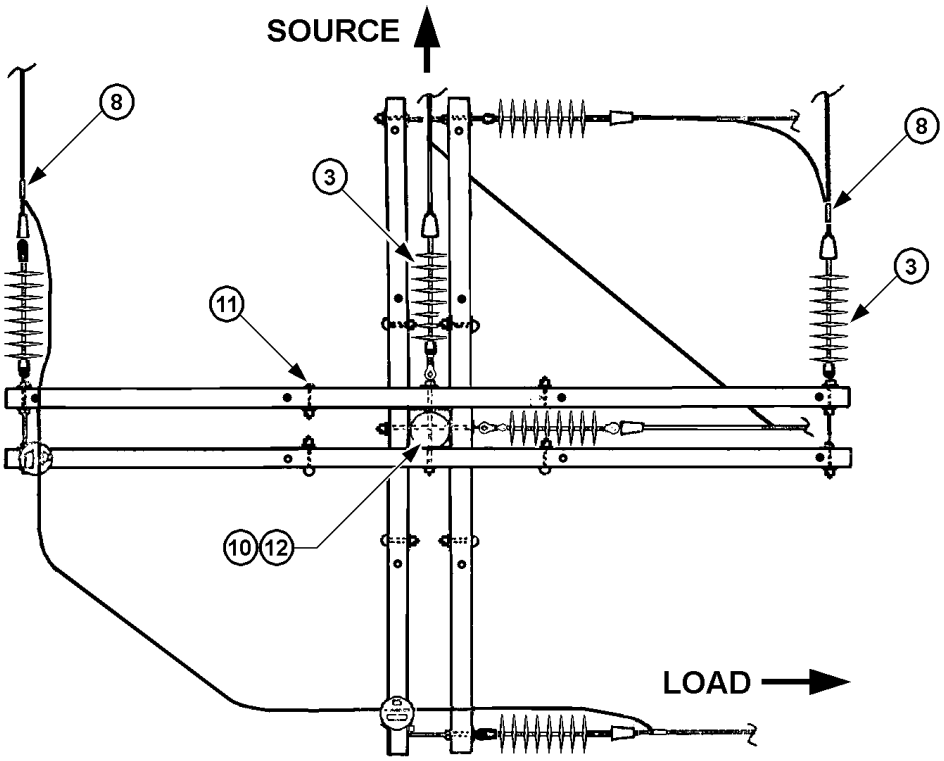

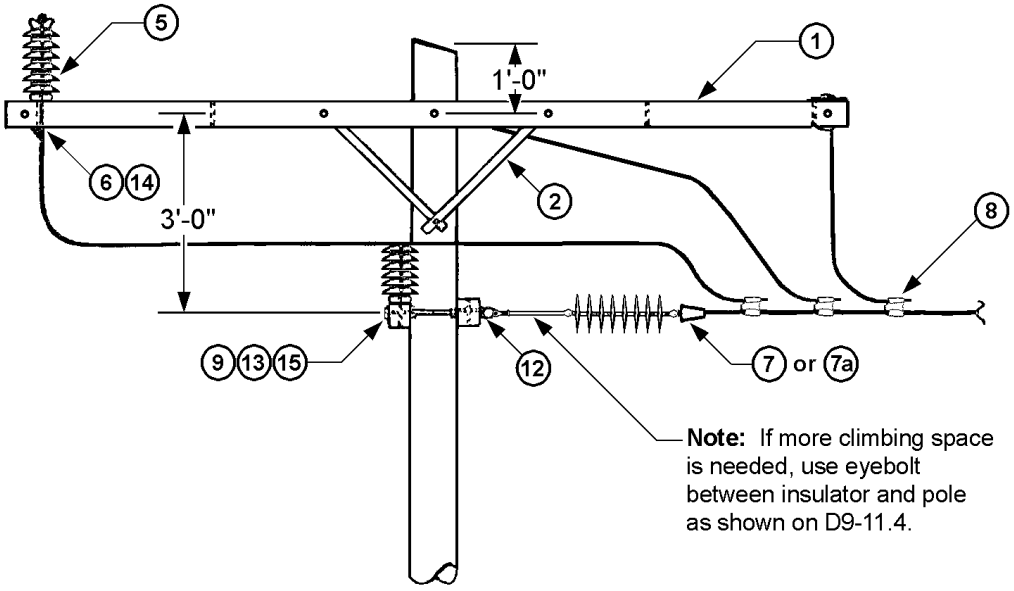

Note: If more climbing space is needed, use eyebolt between insulator and pole as shown on D9-11.4.

d9-671.tif

ORIGINATOR	STANDARDS COORDINATOR	STANDARDS SUPERVISOR	UNIT DIRECTOR
Jim L. Horn	Charles L. Shaffer	John Schimmer	Hardie Jay

MATERIAL LIST

Item	Quantity	Description		Stock Number
1	3	CROSSARM, 10', 6 pin		540146
2	3	BRACE, Flat, 32"		563005E
3	6	INSULATOR, Deadend, Polymer, 21”		690233
5	2	INSULATOR, Post Top, 34.5 kV		690157
6	2	STUD, Long, 3/4" x 7"		696828E
7	6	CLAMP, Deadend, Straight Line, for ACSR & AAC	3/0 to 477 795 to 954	694292 694294
7A	6	DEADEND, Automatic, Cu	#4	581332E
8	6	CONNECTOR, Ampact, state size and material		See 65-8
9	4	BOLT, Double Arming, Galvanized, 5/8" x L		See 56-14
10	2	BOLT, Machine, Galvanized, 5/8" x L		See 78-19
11	8	BOLT, Machine, Galvanized, 1/2" x 6"		780806E
12	6	NUT, Eye, 5/8"		565252E
13	6	WASHER, Square, Flat, 2-1/4" x 2-1/4"		585135E
14	2	WASHER, Coil Spring Lock, 3/4"		584267E
15	4	WASHER, Coil Spring Lock, 5/8"		584261E

TREE CLEARANCES

1. Table of Contents

Section **Page**

1. Table of Contents 1
2. Scope 1
3. Requirements 1
4. Notes 1
5. Pruning Figures 2
5.1 Three Phase Distribution Powerline, Top Pruning, Conifer (formerly TA-2000) 2
5.2 Three Phase Distribution Powerline, Directional Pruning, Deciduous (formerly TA-2001) 3
5.3 Single Phase Distribution Powerline, Directional Pruning, Deciduous (formerly TA-2002) 4
5.4 Three Phase Distribution Powerline, Side Pruning, Deciduous (formerly TA-2003) 5
5.5 Three Phase Distribution Powerline, Side Pruning, Conifer (formerly TA-2004) 6
5.6 Single Phase Distribution Powerline, Side Pruning, Deciduous (formerly TA-2005) 7
5.7 Single Phase Distribution Powerline, Side Pruning, Conifer (formerly TA-2006) 8
6. References 8

2. Scope

This Guideline covers tree clearances to Seattle City Light's (SCL) secondary, distribution, and transmission overhead power lines. Vegetation clearance criteria are based on WAC-296-24-960, RCW 64.12.035 and SCL best practice.

3. Requirements

Trees shall be trimmed according to Table 1 and Figures 5.1 through 5.7.

Table 1

Conductor Type	Other	Minimum Clearance, ft
primary distribution conductors, 4 kV to 26 kV	transformers, switches and electrical equipment	10
secondary conductors	system neutrals and bridle service wire	3 – conifers 5 – deciduous
sub-transmission conductors (35 to 69 kV)	-	12.4
115 kV transmission conductors	-	12.4
230 kV transmission conductors	-	16.5

standards coordinator	standards supervisor	unit director
Uzma Siddiqi	John Shipek	Pam S. Johnson

4. Notes

4.1 Primary Distribution Conductors

Primary distribution conductors, 4 kV to 26 kV, and transformers, switches and electrical equipment requires minimum clearance from vegetation of 10 feet.

4.2 Secondary Conductors

Secondary conductors, system neutrals, and bridle service wires require minimum clearance from vegetation of 3 to 5 feet.

4.3 Pole Height

Illustrations in this Guideline are shown for a typical 47-foot utility pole. The same clearance criteria apply to poles of other heights and to all conductors (wire).

4.4 Non-City Light Services

Fiber optic, cable TV and telephone cables are not trimmed out by City Light unless they are incidentally within 3 to 5 feet of the secondary zone. Streetlights are not trimmed out for illumination by SCL.

4.5 Vertical Clearance

Branches overhanging primary conductors from above are removed to a minimum of 15 feet above the primary conductors. See figures 5.5 and 5.7.

4.6 Transmission Conductors

Take special note that transmission conductor clearances are not shown in the figures. See Table 1 for clearance requirements.

5. Pruning Figures

5.1 Three Phase Distribution Powerline, Top Pruning, Conifer (formerly TA-2000)

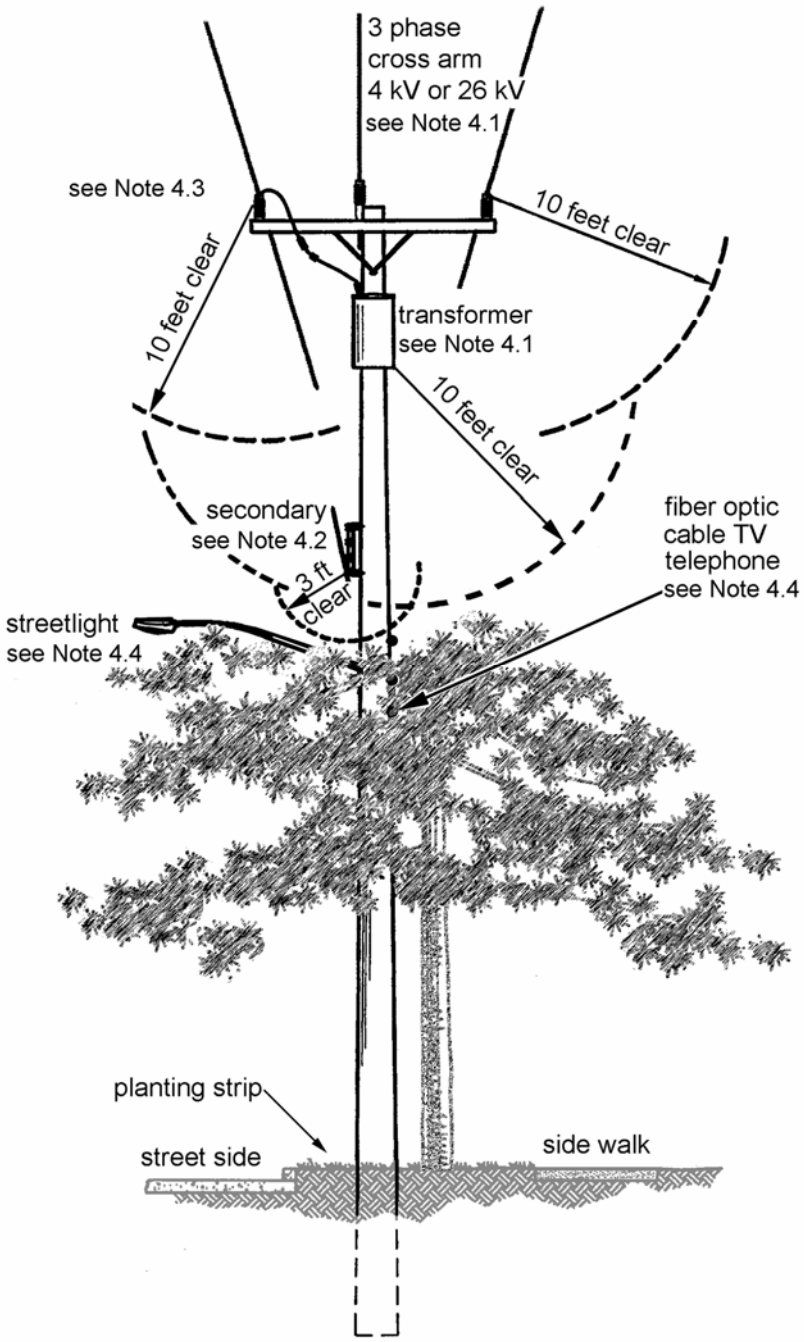

5. Pruning Figures, continued

5.2 Three Phase Distribution Powerline, Directional Pruning, Deciduous (formerly TA-2001)

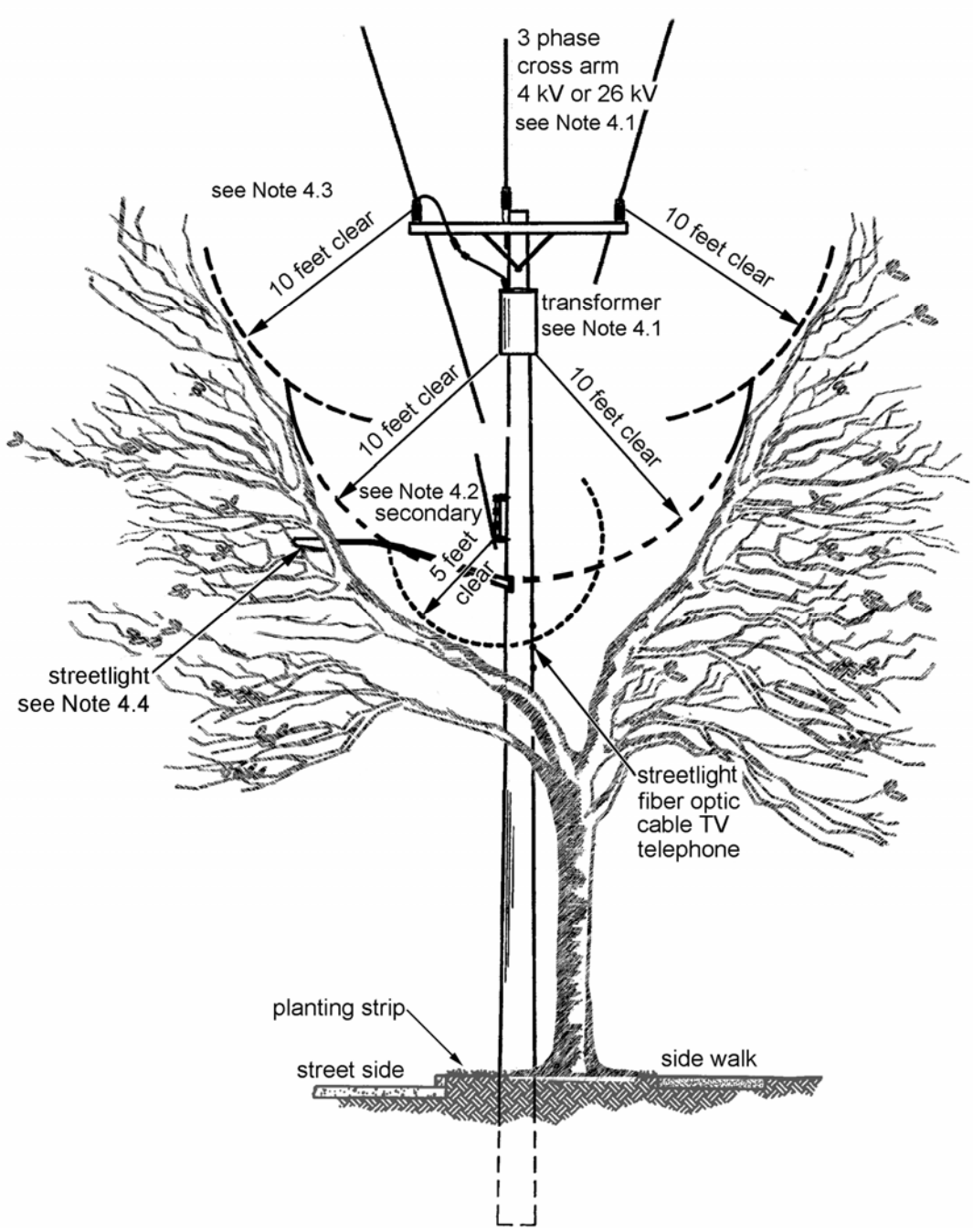

5. Pruning Figures, continued

5.3 Single Phase Distribution Powerline, Directional Pruning, Deciduous (formerly TA-2002)

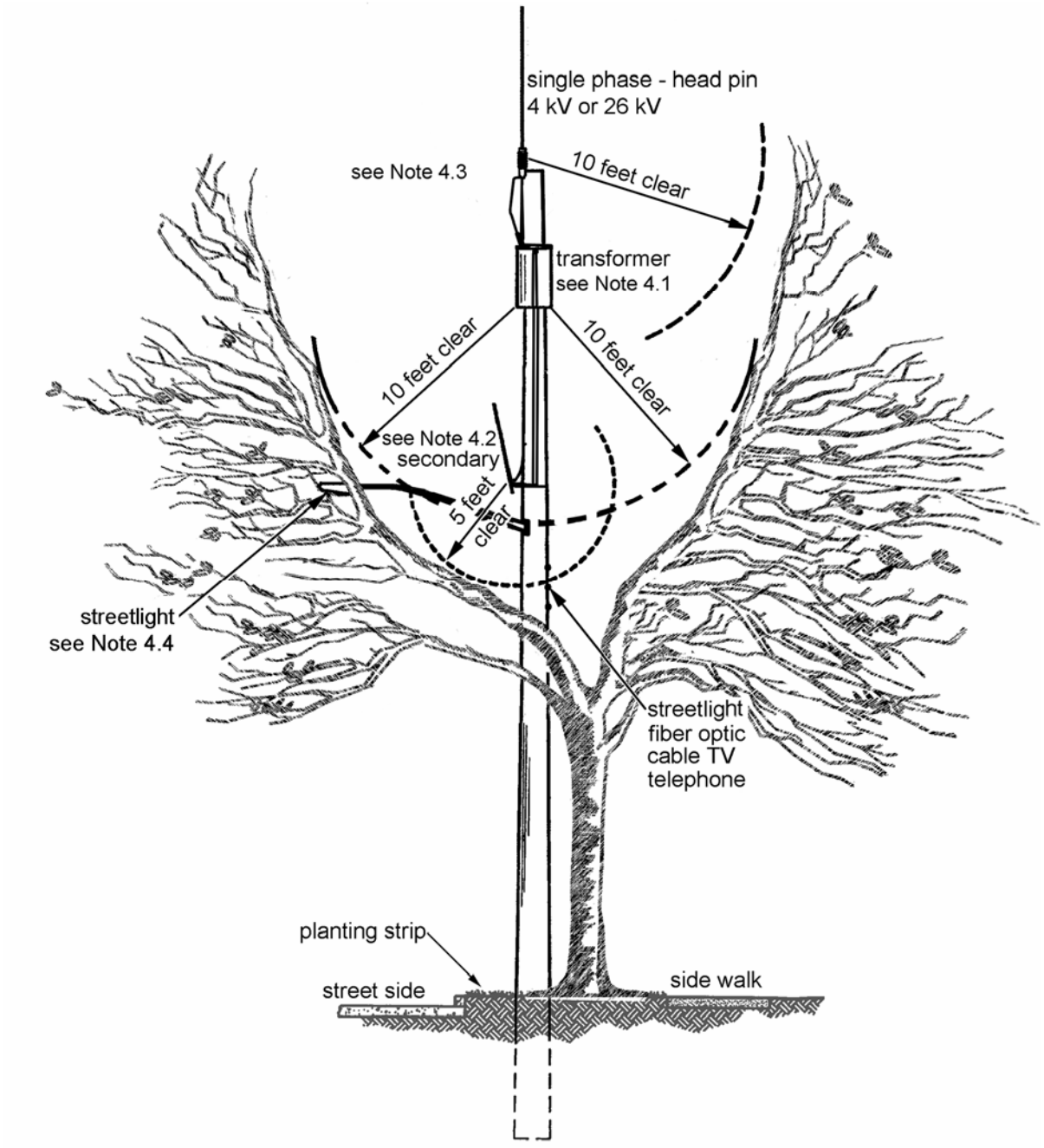

5. Pruning Figures, continued

5.4 Three Phase Distribution Powerline, Side Pruning, Deciduous (formerly TA-2003)

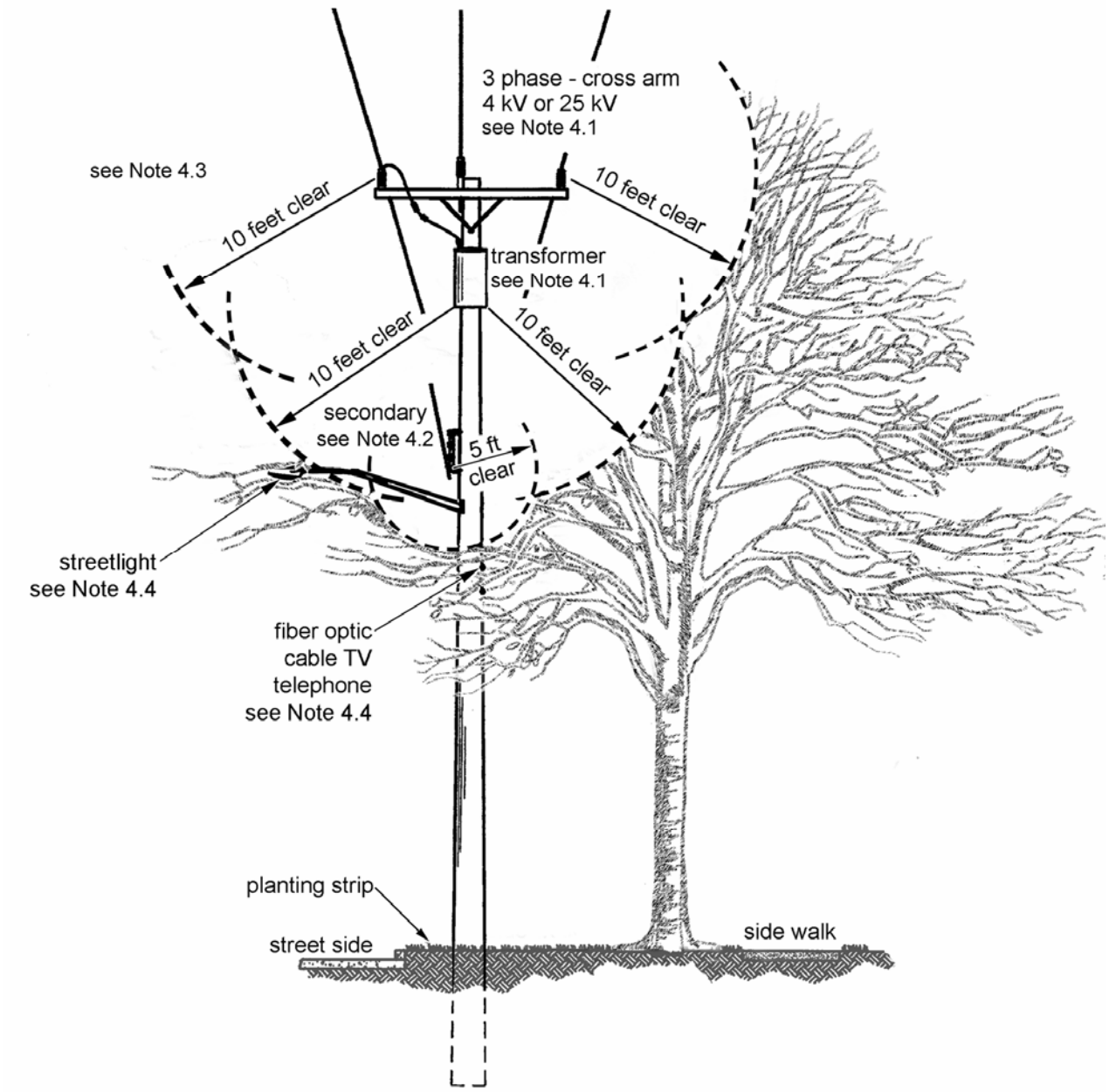

5. Pruning Figures, continued

5.5 Three Phase Distribution Powerline, Side Pruning, Conifer (formerly TA-2004)

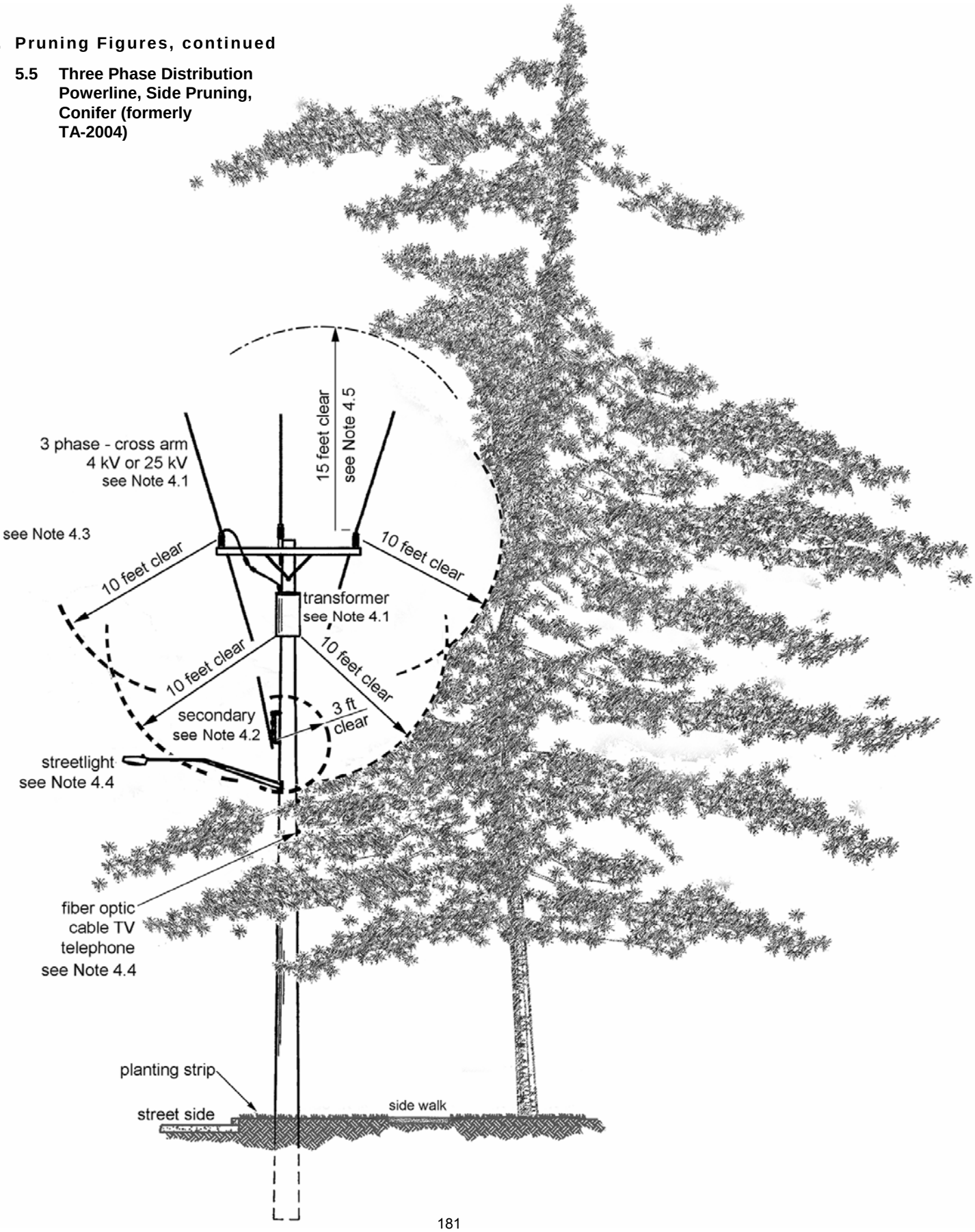

5. Pruning Figures, continued

5.6 Single Phase Distribution Powerline, Side Pruning, Deciduous (formerly TA-2005)

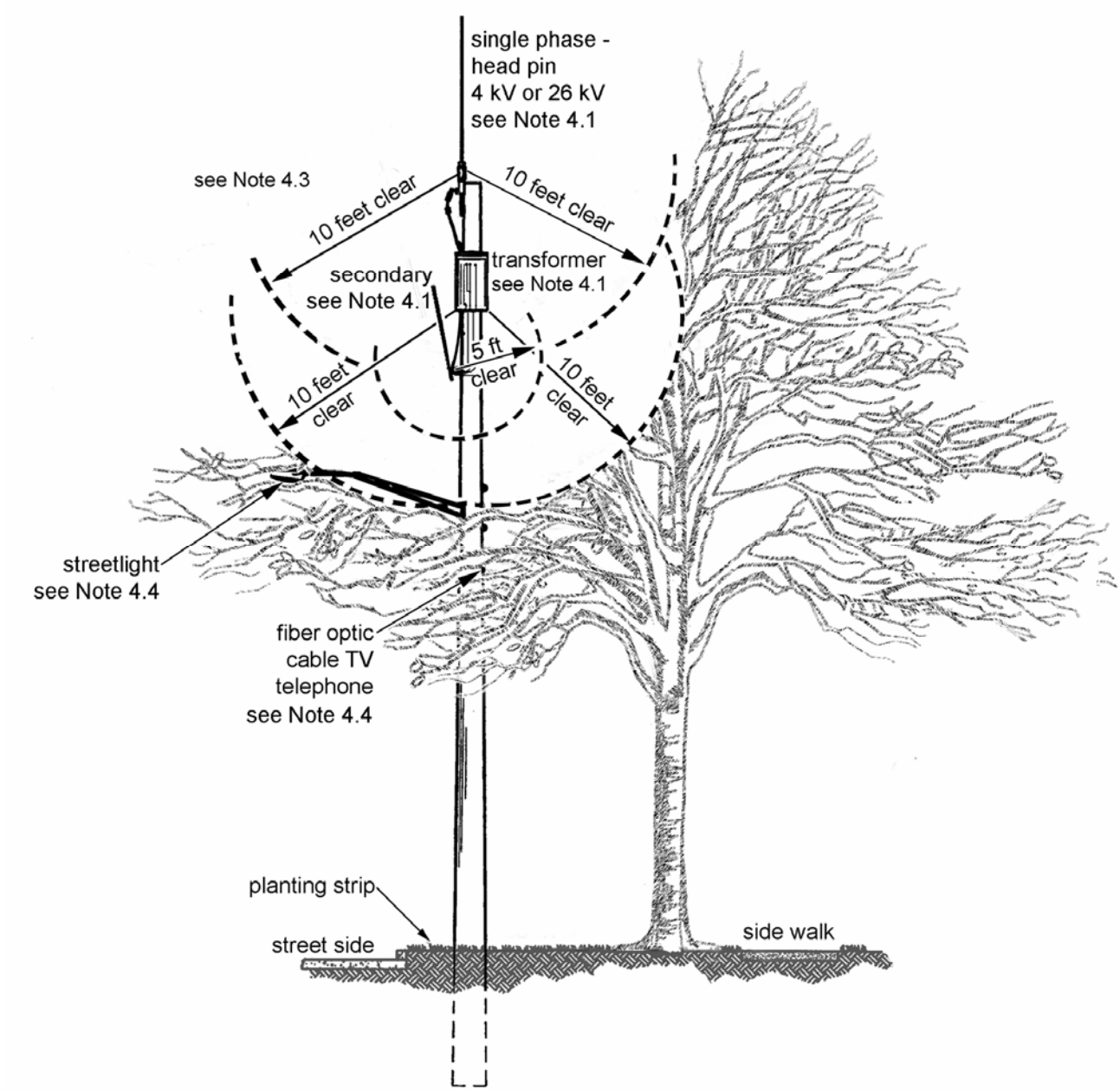

5. Pruning Figures, continued

5.7 Single Phase Distribution Powerline, Side Pruning, Conifer (formerly TA-2006)

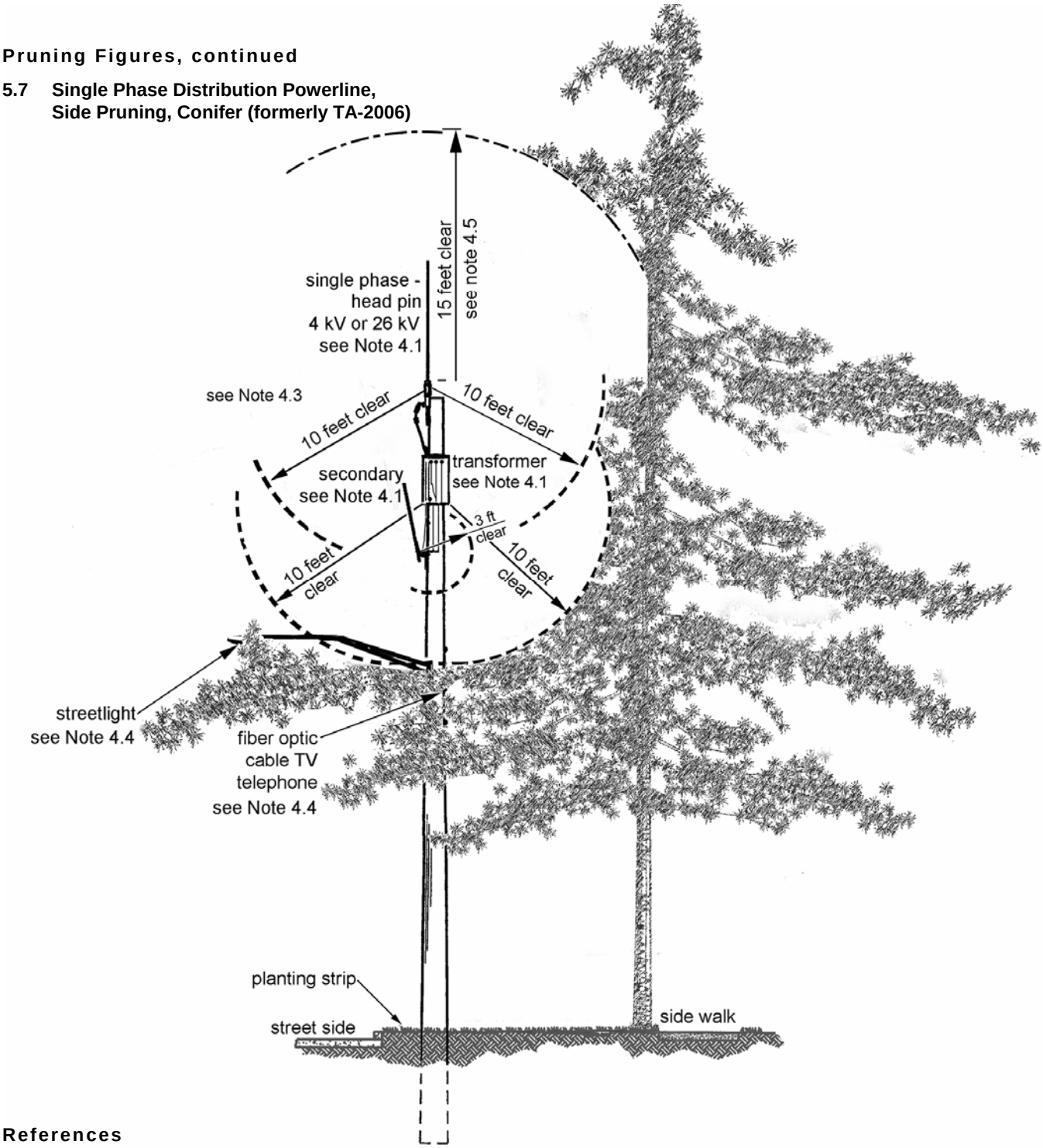

6. References

Ingham, Dave; SCL Powerline Clearance Coordinator, subject matter expert

RCW 64.12.035, Revised Code of Washington, Cutting or Removing Vegetation - Electric Utility - Liability - Definitions.

Siddiqi, Uzma; SCL Standards Engineer, subject matter expert and originator of D9-80 (uzma.siddiqi@seattle.gov)

TA-2000 to TA-2006; series of drawings on tree clearances; SCL; 5/10/2006

WAC-296-24-960, Washington Administrative Code - Training

dummy tab front - D10 - D11

dummy tab back - D10 - D11

TRANSFORMER INSTALLATION
SINGLE PHASE, 15/26 KV

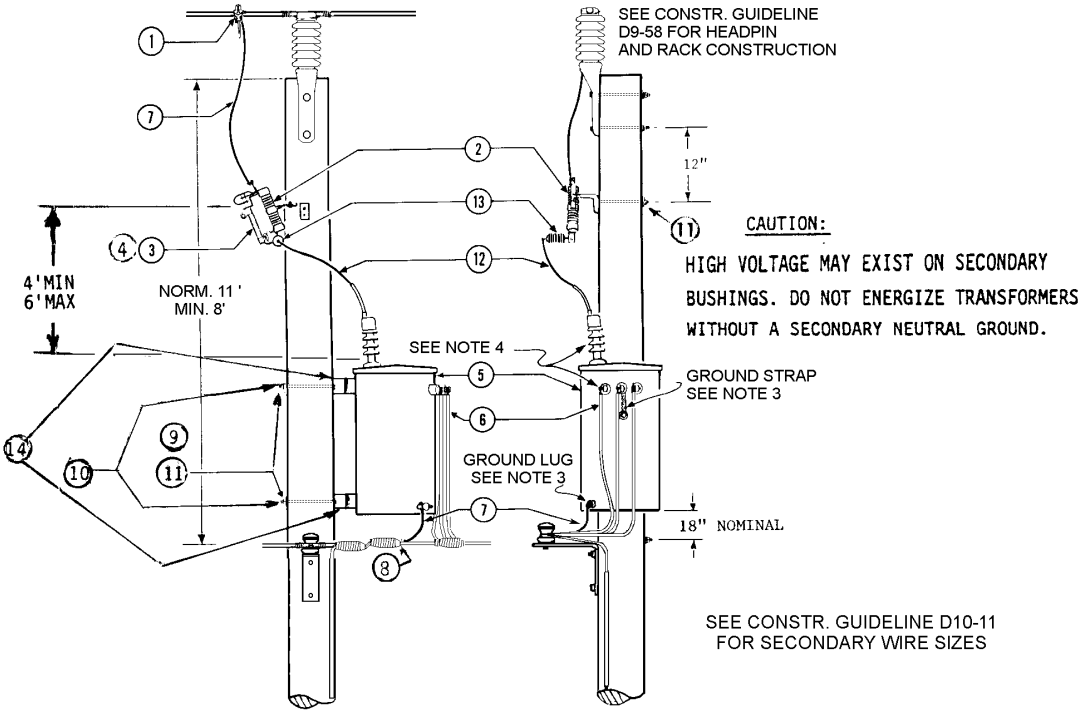

MATERIAL LIST

ITEM	QTY	DESCRIPTION		STOCK #
1	1	Clamp, hot line, Cu-Cu	2/0 - #8 Cu	580725E
			400 - #6 Cu	580727
		Stirrup, for Aluminum	397.5 thru 954 ACSR	580678
		(For Al-Cu See D14-6)		
2	1	Cutout, 27 kV		682099
3	1	Fuse link, per Const. Guideline DU11-1		As Specified
4	1	Bracket, cutout mounting		563222
5	1	Transformer		As Specified
6	As Req'd	Wire, poly insulated		*As Specified
7	As Req'd	Wire, soft drawn copper, #4 solid		610208
8	4	Tap, two bolt parallel - 2/0		669379E
9	3	Washer, 2-1/4" x 2-1/4"		585135E
10	2	Washer, coiled spring		584267E
11	3	Bolt, galvanized, machine, 5/8" x L		780840E thru 780848E
12	As Req'd	Wire, soft drawn poly #4 copper sol		611442
13	1	27/15 kV fault limiter		Per DU11-1
14	2	Bracket extension		580505E

*See Construction Guideline D10-11, Secondary Wire Sizes For Distribution Taps

NOTES:
1. See Construction Guideline D9-58, Head Pin Construction, for material not listed.
2. Transformer tank is ground potential and serves as ground neutral.
3. Tie transformer tank to both secondary neutral bushing and tank grounding lug as shown, before making other connections.
4. Secondary bushing nearest primary bushing ties to top hot secondary as shown, or to north or east secondary on crossarm construction.
5. See Construction Guideline D16-2 for ground rod installation.
6. Install bird guard per Construction Guideline D15-1

ORIGINATOR	STANDARDS COORDINATOR	STANDARDS SUPERVISOR	UNIT DIRECTOR
Jim S. Horn	Charles L. Shaffer	John C. Skinner	Betty Robin

FUSED CUTOUT MOUNTING – CONTAMINATED ATMOSPHERE

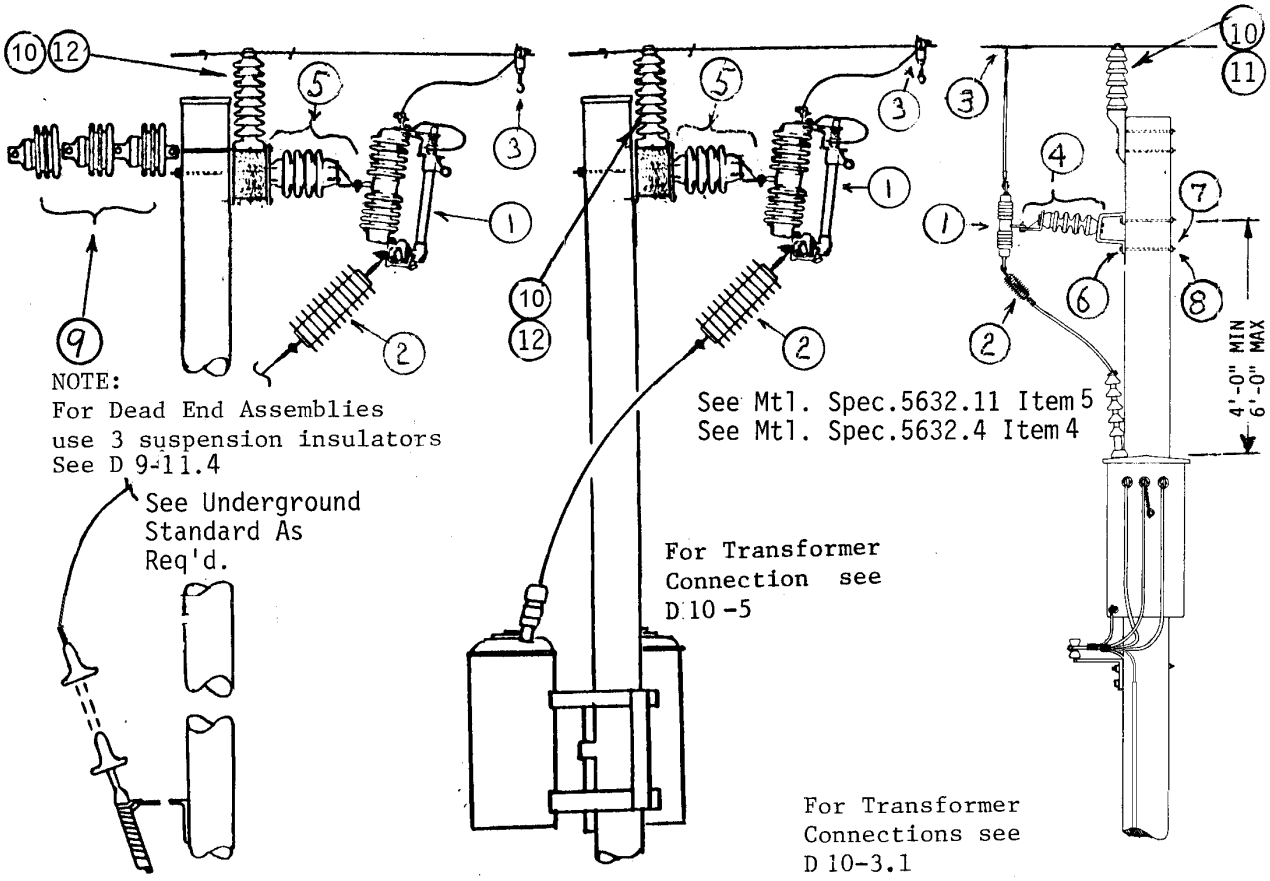

MATERIAL LIST

ITEM	QTY	DESCRIPTION	STOCK NO.
1	1	Cutout, 27 kV fused	682099
2	1	Fault limiter, 27/15 kV	Per DU11-1
3	1	Clamp, hot-line, Cu. 2/0-#8	580725E
		For Al, See D14-6 400-#6	580727
4	1	Bracket Assy, pole mtd. CO - contaminated area	563223
5	1	Bracket Assy, crossarm mtd. CO - contaminated area	563227
6	2	Bolt, 5/8" machine, galvnized	780840E-47E
7	2	Washer, flat, 2-1/4" x 2-1/4"	585135E
8	2	Washer, 3/4" coil spring lock	584267E
9	3	Insulator, strain	690208
10	1	Insulator, 46 kV post	690161
11	1	Short stud	696826E
12	1	Long stud	696828E

NOTES:

Return cutout standoff bracket to salvage
For limiter mounting details, see D11-2

ORIGINATOR	STANDARDS COORDINATOR	STANDARDS SUPERVISOR	UNIT DIRECTOR
Jim S. Horn	Charles L. Shaffer	John C. Skinner	Betty Robin

15/26 KV DISTRIBUTION 2 TRANSFORMER, 3 PHASE INSTALLATION CLUSTER MOUNTED

Caution: High Voltage may exist on secondary bushings. Connect center-point ground on lighter and connect teaser to lighter before energizing primaries.

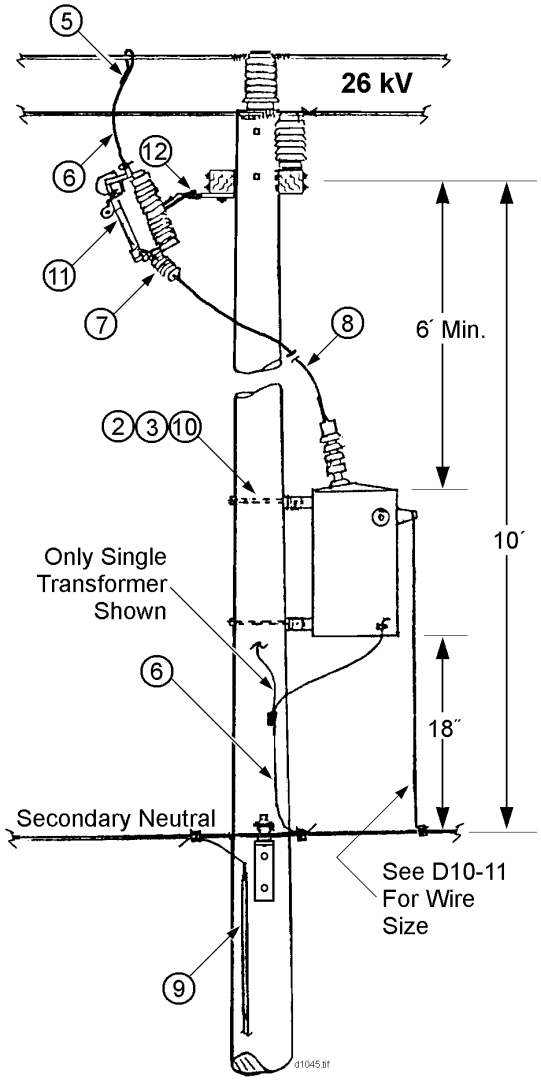

Material List

Item	Qty.	Description		Stock No.
1	4	BRACKET, extension, rack		580505E
2	2 or 4	BOLT, machine, galvanized, 3/4˝ x L		780875E thru 780880E, 781070E, 781072E
3	4	WASHER, plate, galvanized, 3˝ x 3˝		584947E
5	2	CLAMP, hot line, copper	2/0 to #8	580725E
			400 to #6	580727
		Stirrup for aluminum	397.5 to 954	580678
6	40´	WIRE, #4 copper, solid, bare soft drawn		610208
7	2	FUSE, fault limiter, per DU11-1		–
8	40´	WIRE, #4 copper, solid poly insul.		611442
9	32´	MOULDING, plastic		582060E
10	4	WASHER, coil spring lock, 3/4˝		584267E
11	2	CUTOUT, 27 kV, ultra heavy duty		682099
12	2	BRACKET, cutout mounting		682097

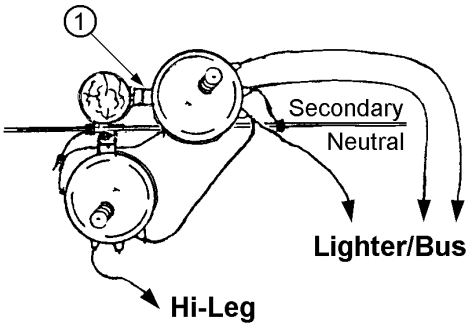

Where possible, install lighter on leading phase with Hi-Leg on adjacent phase, as, Lighter W2, Hi-Leg W1.

References:
D10-11 Wire Sizes
DU11-1 and D11-2 Fusing
D15-1 Bird Guard
D16-2 Pole Grounding

STANDARDS COORDINATOR	STANDARDS SUPERVISOR	UNIT DIRECTOR

15/26 KV DISTRIBUTION 3 PHASE TRANSFORMER INSTALLATION, CLUSTER MOUNTED

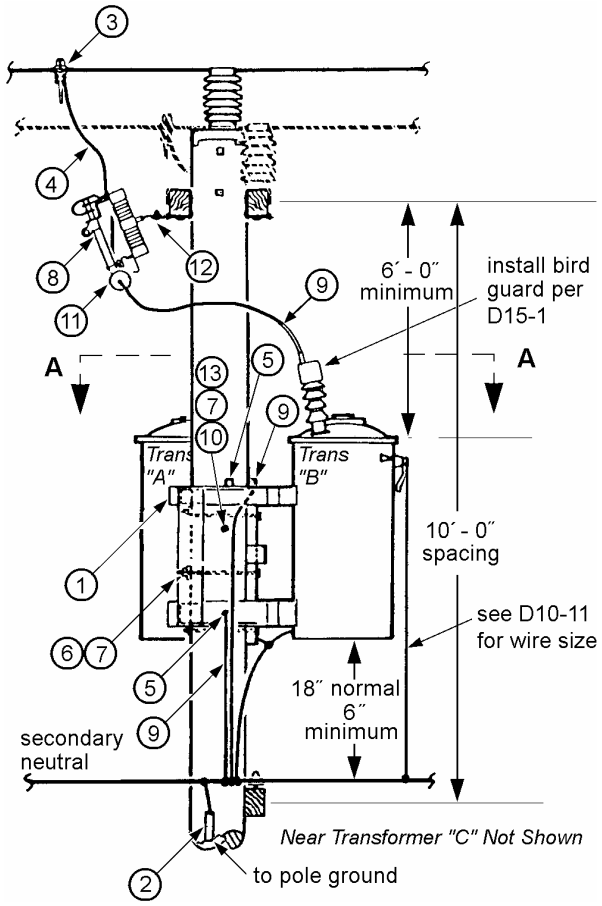

Construction Details

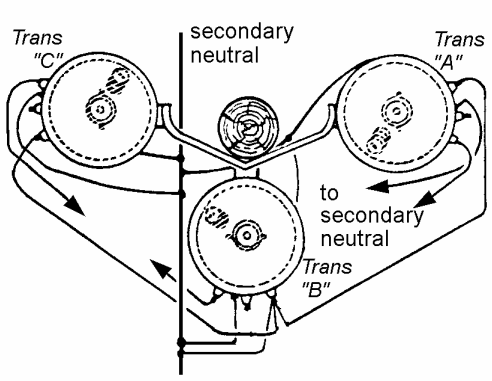

Section A - A

Material List

Item	Qty.	Description		Stock Number
1	1	BRACKET, transformer cluster mount		563294
2	32´	MOULDING, plastic		582060E
3	3	CLAMP		
		hot line	2/0 to #8	580725E
		copper	400 to #6	580727
		Stirrup for Al	397.5 to 954	580678
4	40´	WIRE, #4 Cu solid, bare, soft drawn		610208
5	2	CONNECTOR, tap lug, #8 to 2/0		676102
6	2	BOLT, machine, galvanized, 3/4˝ x L		780875E thru 781072E
7	4	WASHER, curved square, zinc coated, 4˝ x 4˝		584775E
8	3	CUTOUT, 27 kV, ultra heavy duty		682099
9	40´	WIRE, #4 Cu sol. poly insulated		611442
10*	1	BOLT, machine, galvanized, 5/8˝ x L		780845E thru 780849E
11	3	FUSE, fault limiter, per DU11-1		–
12	3	BRACKET, cutout mounting, crossarm		682097
13	1	WASHER, double coil lock		584261E

* Use these bolts on transformer banks to prevent pole splitting.

Notes:

1. On all transformer banks, use Item 10 bolts to prevent pole splitting
2. For ASCR conductors, use stirrup and hot line clamp per D14-6.

STANDARDS COORDINATOR	STANDARDS SUPERVISOR	UNIT DIRECTOR
Uzma Siddiqi	John Barnett	Richard Kent

15/26 KV DISTRIBUTION 3-PHASE TRANSFORMER INSTALLATION CLUSTER MOUNTED, POLE TOP

25564 ground Y/14760 to 4160 ground Y/2400 volts

Application:

For 26 kV overhead to 4 kV conversion banks. For installations of 250 kVA transformers, a structural analysis shall be performed to insure compliance with NESC, Section 26

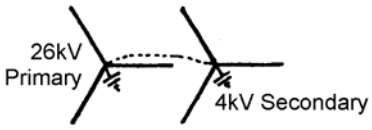

Notes:

1. 4kV neutral shall be tied to the secondary neutral and shall be placed on the pole under the moulding or in schedule 40 PVC conduit.
2. Spacing between the 4kV neutral and the secondary neutral to be 5´-0˝ vertical except that in certain cases the vertical distance may be reduced to a minimum of 4´-0˝ if space is not available.
3. Install red Scotchlite™ "Danger" decal on the bottom of the transformers (paint shop will furnish and install).

   Stock number: 765195.
4. For single phase (one transformer) installation, run one of the tank grounds direct to 4kV neutral.
5. See Construction Guideline D16-2 for pole grounding.
6. See Construction Guideline DU11-1 for transformer fusing and primary limiter.
7. For all transformer bank poles, use a bolt (item 11) to prevent pole splitting.

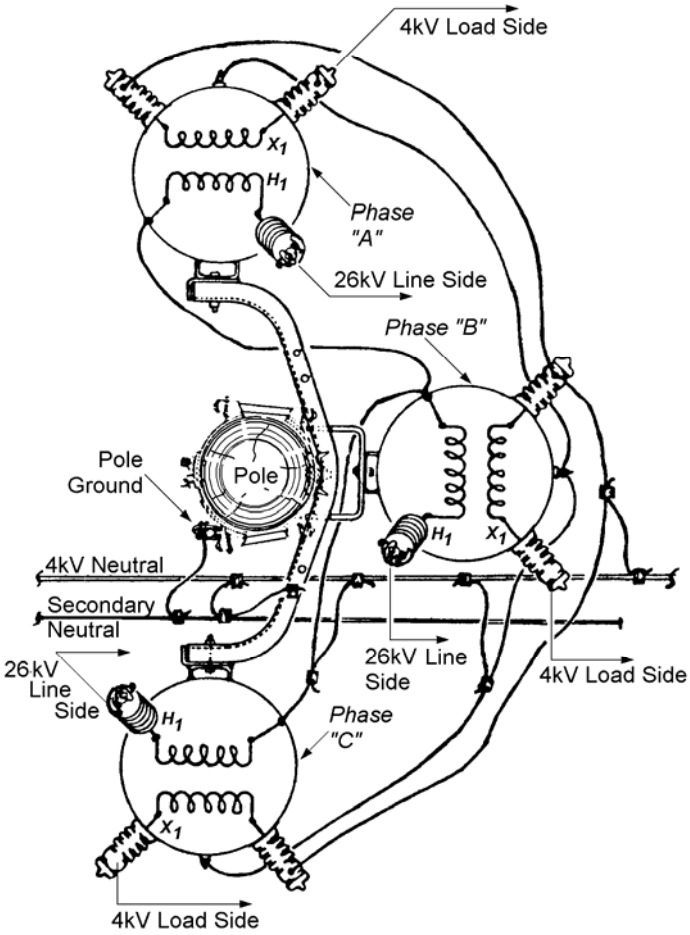

Top View of Cluster Mounted Transformers

STANDARDS COORDINATOR	STANDARDS SUPERVISOR	UNIT DIRECTOR
Uzma Siddiqi	John Barnett	Richard Kent

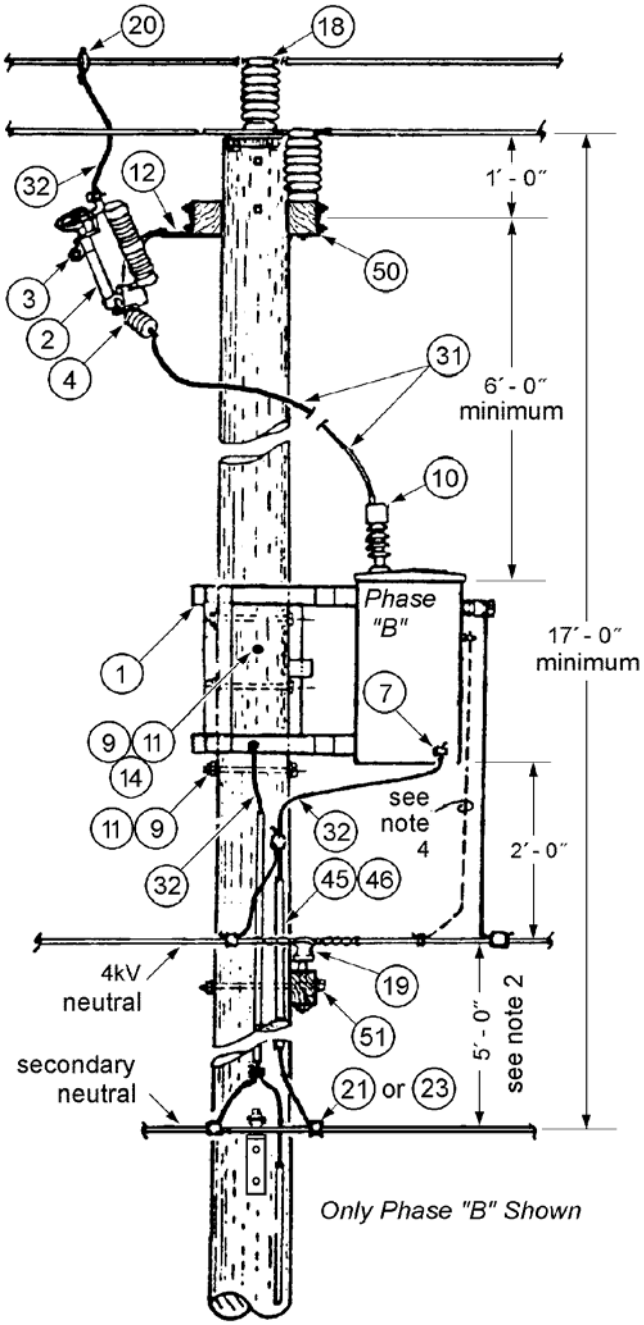

Construction Details

See Top View and Notes, page 1

Material List

Item	Qty	Description		Stock Number
1	1	BRACKET, transformer cluster mount for up to 7500 lbs.		563294
2	3	FUSE LINK, K rated, per DU11-1	3K	683706E
			6K	683708E
			10K	693710E
			15K	683711E
			25K	683713E
3	3	CUTOUT, 27kV, ultra heavy duty		682099
4	3	FUSE, fault limiter, per DU11-1	″A″	684900
			″B″	684902
			12 K	684920
6	1	SCREW, lag, 1/2″		785259E
7	3	CONNECTOR, transformer grounding		676200
9	6	WASHER, curved square zinc coated, 4″ x 4″		584775E
10	3	BIRD GUARD (See D15-1)		580776
11	1	MACHINE BOLT, zinc coated, 5/8″ x L	12 in. L	780845E
			14 in. L	780846E
			16 in. L	780847E
			18 in. L	780848E
			20 in. L	780849E
12	3	BRACKET, cutout mounting, crossarm		682097
14	1	WASHER, double coil lock		584261E
18	3	INSULATOR, line post with studs		690157
19	4	INSULATOR, pin type, 4kV		690005E
20	3	CLAMP		
		hot line	1/0 to #8	580725E
		copper	400 to #6	580727
		stirrup for aluminum	397.5 to 954	580678
21	5*	CONNECTOR Cu to Cu, crimpet	#4 to #4 #2 to #2	677323E 677326E
23	2*	CONNECTOR Cu to Cu, crimpet	#4 to #4 #2 to #2	677323E 677326E
		Ampact (See D14-1 for sizes and ranges)		651090 to 651109
31	40′	WIRE, #4 copper solid, poly insulated, soft drawn		611442
32	40′	WIRE, #4 copper solid, bare, soft drawn		610208
45	32′	MOULDING, plastic		582060E
46	50*	STAPLES, moulding, 1/2″ x 2″		583200E
50	1*	CROSSARM, Douglas fir, treated, 6 foot 4 pin primary feeder		540205
51	1*	CROSSARM, Douglas fir, treated, 10 foot 8 pin, 26kV		540220

* Quantities listed with an asterisk (*) are variable due to modifications of design or due to field conditions.

COPPER WIRE SIZES FOR DISTRIBUTION TRANSFORMERS SECONDARY CONNECTIONS

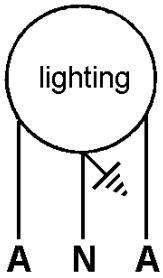

120/240 or
240/480 1Ø - 3w

kVA	120/240		240/480	
	A	N	A	N
15	4	4	–*	–
25	2	4	4	4
37.5	2/0	2	–*	–
50	4/0	2/0	2	4
75	350	4/0	2/0	2
100	350	4/0	4/0	2/0
167	2-350	350	350	4/0

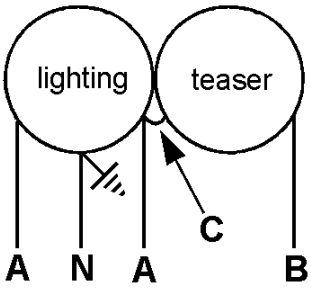

120/240 V 3Ø or
240/480 V 3Ø open delta
4 wire

kVA	120/240			240/480*		
	A	B, C	N	A	B, C	N
15-15	4	4	4	–	–	–
25-15	2	4	4	–	–	–
25-25	2	2	4	4	4	4
37-15	2/0	4	2	–	–	–
37.5-25	2/0	2	2	–	–	–
37.5-37.5	2/0	2/0	2	–	–	–
50-15	4/0	4	2/0	–	–	–
50-25	4/0	2	2/0	2	4	2
50-37	4/0	2/0	2/0	–	–	–
50-50	4/0	4/0	2/0	2	2	2
75-15	350	4	4/0	–	–	–
75-25	350	2	4/0	2/0	4	2
75-37.5	350	2/0	4/0	–	–	–
75-50	350	4/0	4/0	2/0	2	2
75-75	350	350	4/0	2/0	2/0	2
100-15	350	4	4/0	–	–	–
100-25	350	2	4/0	4/0	4	2/0
100-37.5	350	2/0	4/0	–	–	–
100-50	350	4/0	4/0	4/0	2	2/0
100-75	350	350	4/0	4/0	2/0	2/0
100-100	350	350	4/0	4/0	4/0	2/0
167-15	2-350	4	350	–	–	–
167-25	2-350	2	350	350	4	4/0
167-37.5	2-350	2/0	350	–	–	–
167-50	2-350	4/0	350	350	2	4/0
167-75	2-350	350	350	350	2/0	4/0
167-100	2-350	350	350	350	4/0	4/0
167-167	2-350	2-350	350	350	350	4/0

* There are 15 and 37.5 kVA transformers only at 120/240 or cut 120 for 208Y/120. There are **NO** 15 or 37.5 kVA transformers at 240/480, 277, 265, 138/277, etc.

ORIGINATOR	STANDARDS COORDINATOR	STANDARDS SUPERVISOR	UNIT DIRECTOR
Jim S. Horn	Charles L. Shaffer	John C. Kimmer	Harold Jy

COPPER WIRE SIZES FOR DISTRIBUTION TRANSFORMERS SECONDARY CONNECTIONS

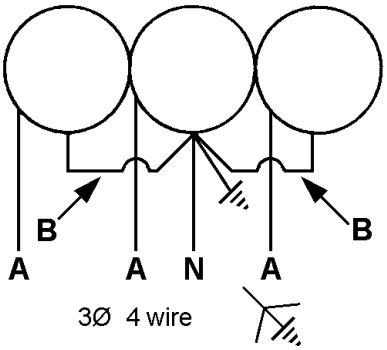

kVA	208/120 – 240/138 A,B	208/120 – 240/138 N	480/277* A, B	480/277* N	Notes
3-15	2	4	–	–	208 /120 240 /138 480 /277
3-25	4/0	2/0	2	4	
3-37.5	350	4/0	–	–	
3-50	350	4/0	2/0	2	
3-75	500	350	4/0	2/0	
3-100	2-350	350	350	4/0	
3-167	2-500	2-350	500	350	

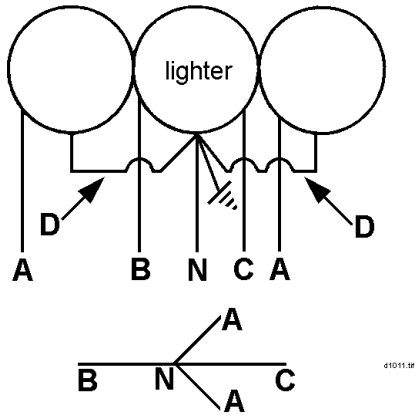

kVA	A,D	B	C	N	Notes
15-50-15	2	4/0	2	2/0	three phase and single phase for 208 /120 V 3Ø – 4w & 120/240 V 1Ø-3w
15-75-15	2	350	2/0	4/0	
25-75-25	4/0	350	2	4/0	
15-100-15	2	350	4/0	4/0	
25-100-25	4/0	350	2/0	4/0	
37-100-37	350	350	2	4/0	
15-167-15	2	2-350	500	350	
25-167-25	4/0	2-350	350	350	
37-167-37	350	2-350	350	350	
50-167-50	350	2-350	4/0	350	

REFERENCE TABLE FOR TRANSFORMER SECONDARY CONNECTIONS

Copper Wire Ampacity (Free Air Rating)

Size	Normal Amps	Emergency Amps	Stock No.	Wire Size Substitutions When Others Are Not Available
4	141	178	611442	
2	210	265	613730	
2/0	335	446	613733	2#2 for 2/0
4/0	430	593	613735	2#2 for 4/0
350	635	908	613738	2-2/0 for 350
500	780	1115	613740	2-4/0 for 500
750	986	1410	613743	2-350 for 750

Transformer Full Load Amps

KVA	120/240	240/480*	120 (208/120)	138 (240/138)*	277 (480/277)*
15	63	–	125	–	–
25	104	52	208	181	90
37.5	156	–	312	–	–
50	208	104	416	362	181
75	312	156	625	543	271
100	416	208	833	725	361
167	696	348	1392	1210	603

* There are 15 and 37.5 kVA transformers only at 120/240 or cut 120 for 208Y/120. There are **NO** 15 or 37.5 kVA transformers at 240/480, 277, 265, 138/277, etc.

15/26 KV CAPACITOR INSTALLATION
1200 KVAR CONTROLLER SWITCHED BANK, GROUNDED WYE

Before opening cutouts allow a five minute discharge period with the oil switches open.

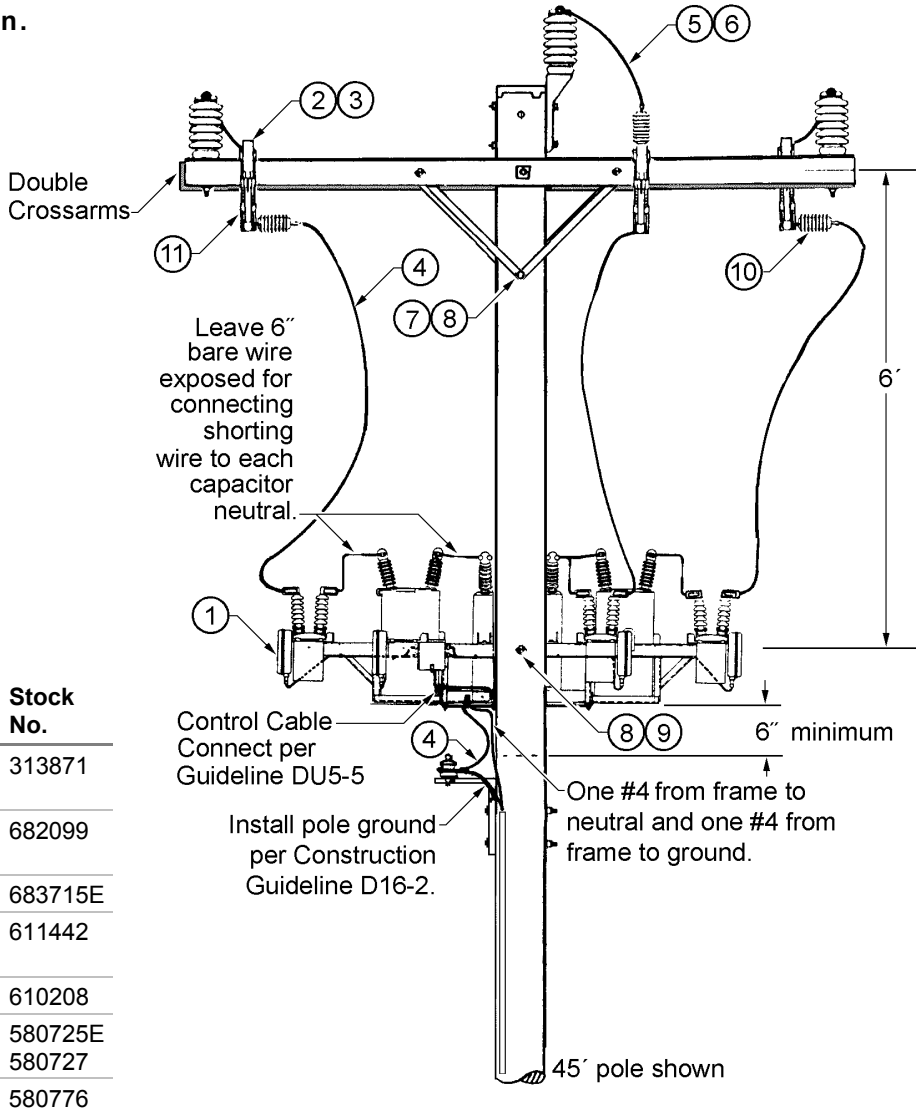

Material List

Item	Qty.	Description	Stock No.
1	1	Capacitor unit, 1200 KVAR, 15 kV	313871
2	3	CUTOUT, 27 kV, ultra heavy duty	682099
3	3	FUSE link, 40 K	683715E
4	25′	WIRE, #4 Cu, solid poly insulated	611442
5	40′	WIRE, #6 Cu, solid bare	610208
6	3	CLAMP, hot line, copper 2/0 to #8 400 to #6	580725E 580727
7	2	BIRD GUARD	580776
8	2	WASHER, coil spring lock, 3/4″	584267E
9	2	BOLT, mach, galvanized, 5/8″ x L	780840E to 780847E
10	3	FUSE, fault limiter, “C”	684905
11	3	BRACKET, cutout mounting, crossarm	682097

STANDARDS COORDINATOR	STANDARDS SUPERVISOR	UNIT DIRECTOR

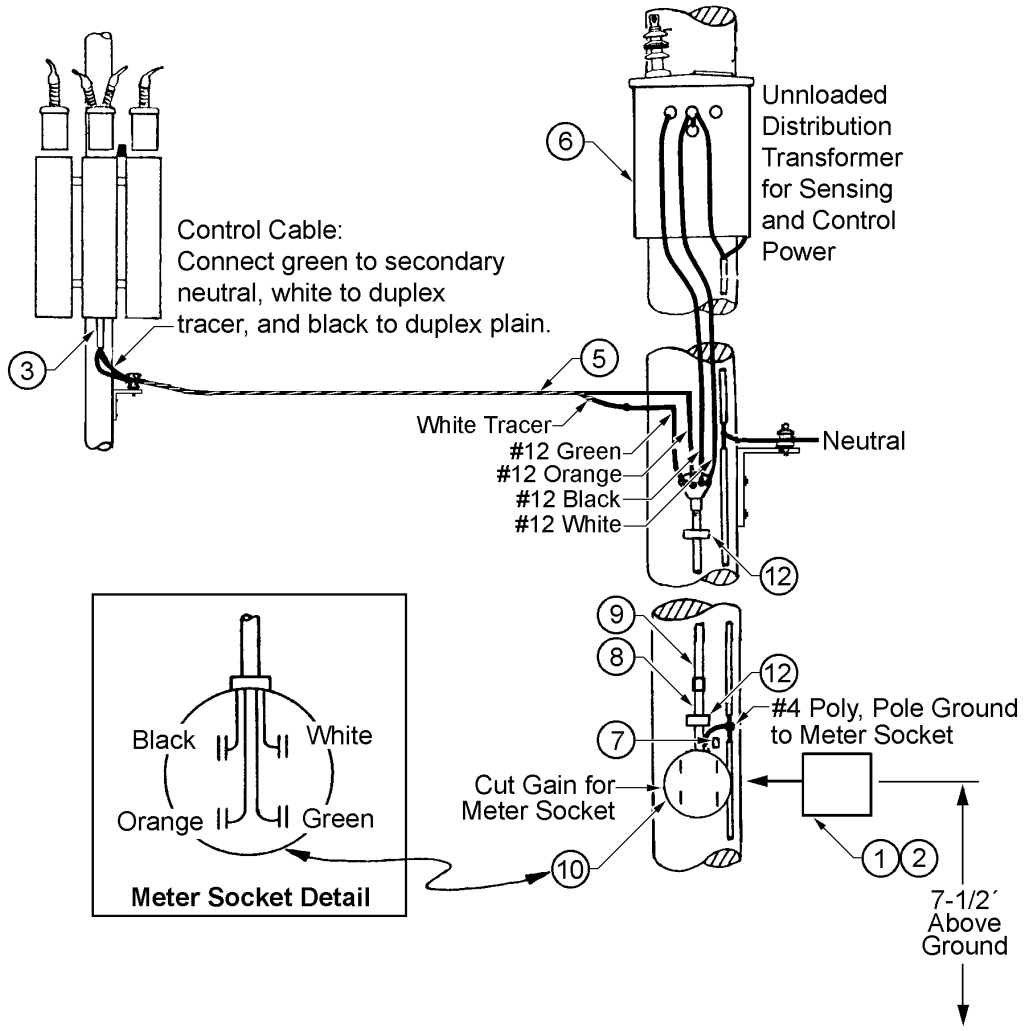

References:

SCL Construction Guideline U7-10, Conduit on Riser Poles

SCL Construction Guideline U7-10.9, Grounding Conduit on Riser Poles

SCL Construction Guideline D16-2, Grounding Rod Installation

Material List

Item	Quantity	Description	Stock No.
1	1	PADLOCK, SNM-1	Key Coordinator
2	1	CONTROL, biased time	738365
3	5´	MOULDING, plastic	582060E
5	as required	WIRE, #12 Cu. duplex	640440
6	1	TRANSFORMER, “Y”, 15 KVA	–
8	10´	CONDUIT, 3/4˝ Al	734752
9	as required	CONDUIT, 3/4˝ PVC with weatherhead	shop made as specified by engineer
10	1	METER SOCKET, wired with 4-#12 (white, black, green and orange)	shop made as specified by engineer

15/26 KV CAPACITOR INSTALLATION
1200 KVAR CONTROLLER SWITCHED BANK, FLOATING WYE

Notes:

IMPORTANT – SEE OPERATING INSTRUCTIONS ON PAGE 3.

Grounding switch required as switches are rated at 15 kV and with floating wye connection. It would be possible to have 26 kV across a switch as they do not necessarily open or close simultaneously.

Do Not install cutout in jumper between the ground switch and ground. After capacitor is installed, check that the three switches to the phase conductor are open. Manually close the ground switch and then close the three cutouts to the phase conductors.

Before opening cutouts, allow five minute discharge period with the oil switches open.

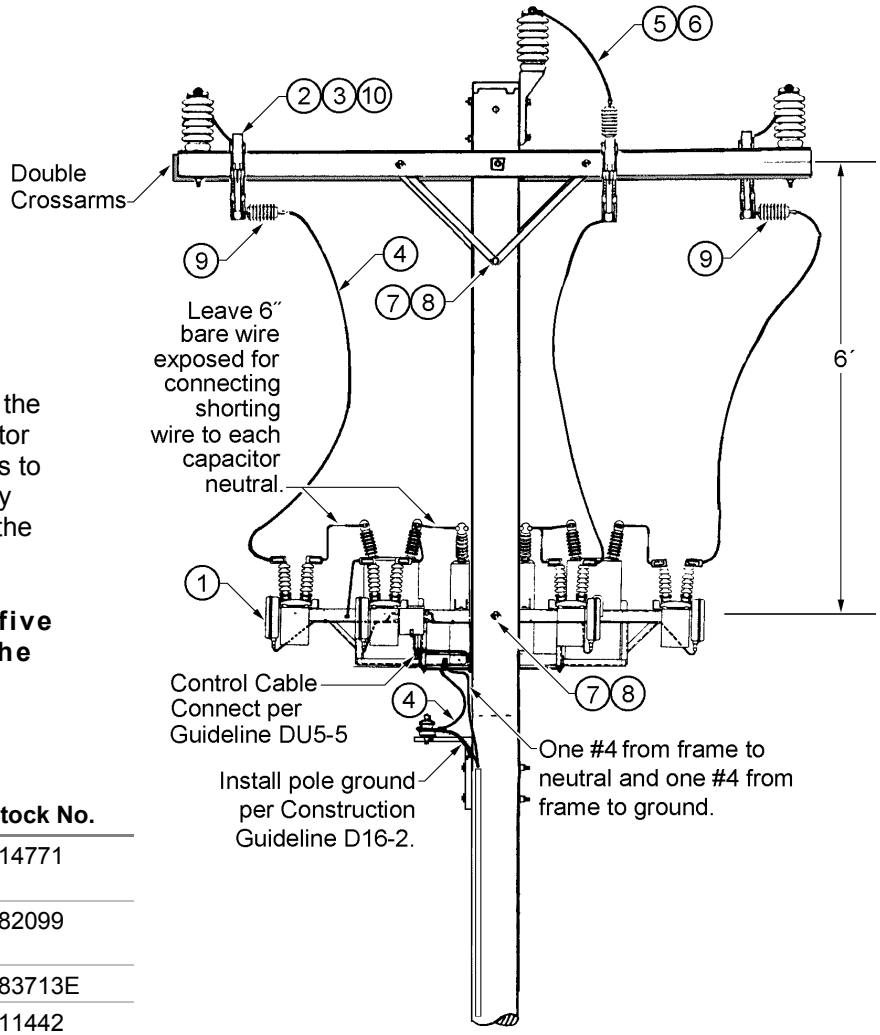

Material List

Item	Qty.	Description	Stock No.
1	1	Capacitor unit, 1200 KVAR, 26 kV	314771
2	3	CUTOUT, 27 kV, ultra heavy duty	682099
3	3	FUSE link, 25 K	683713E
4	25′	WIRE, #4 Cu, solid poly insulated	611442
5	as req'd.	WIRE, #6 Cu, solid bare	610208
6	3	CLAMP, hot line, copper 2/0 to #8 400 to #6	580725E 580727
7	2	BOLT, mach, galvanized, 5/8″ x L	780840E to 780847E
8	2	WASHER, coil spring lock, 3/4″	584267E
9	3	FUSE, fault limiter, "B"	684902
10	3	BRACKET, cutout mounting, crossarm	682097

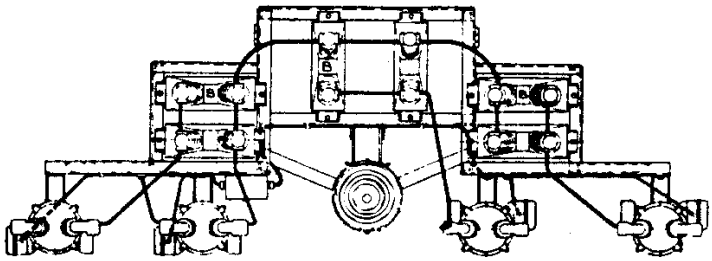

Overhead View

STANDARDS COORDINATOR	STANDARDS SUPERVISOR	UNIT DIRECTOR

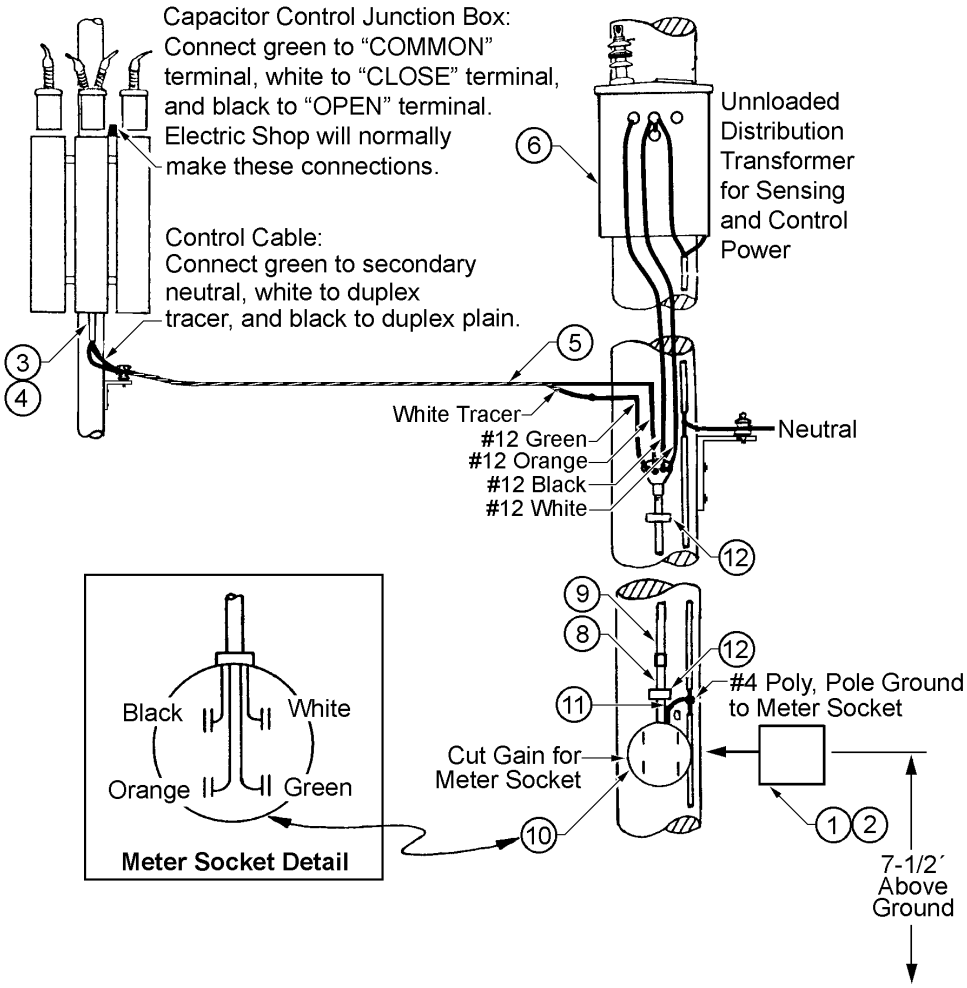

References:

SCL Construction Guideline U7-10, Conduit on Riser Poles

SCL Construction Guideline U7-10.9, Grounding Conduit on Riser Poles

SCL Construction Guideline D16-2, Grounding Rod Installation

Material List

Item	Quantity	Description	Stock No.
1	1	PADLOCK, SNM-1	Key Coordinator
2	1	CONTROL, biased time	738365
3	5´	MOULDING, plastic	582060E
4	9´	CONTROL CABLE, 3-C	640443
5	as required	WIRE, #12 Cu duplex	640440
6	1	TRANSFORMER, "Y", 15 KVA	–
8	10´	CONDUIT, 3/4˝ Al	734752
9	as required	CONDUIT, 3/4˝ PVC with weatherhead	shop made as specified by engineer
10	1	METER SOCKET, wired with 4-#12 (white, black, green and orange)	shop made as specified by engineer
11	1	CLAMP, grounding, 1˝ to 1-1/2˝	733566
12	2	CONDUIT STRAP, 1˝	689760E

INSTRUCTIONS FOR OPERATING FLOATING WYE CAPACITOR BANKS

1. To sequence switches before capacitor line taps are made;
   a) Check 3 switches to phase conductors open
   b) Manually close the ground switch

2. To check switch for proper operation:
   a) Set capacitor auto control switches on Manual and Close. The 3 switches to the phase conductors should close and after they are closed the ground switch will open.
   b) Set capacitor auto control switches on Manual and Open: The ground switch will close and the 3 switches to the phase conductors will open. Leave switches in this position.
   c) If for any reason the switches do not operate as per instructions, notify Voltage Control (North: 206-684-3567; South: 206-684-3551).
   d) If switches operate properly proceed with item 3 of instructions.

3. Make the line taps and close the 3 fused cutouts.

4. Set capacitor auto control switches on Manual and Open. Notify Voltage Control (North: 206-684-3567; South: 206-684-3551) when the job is complete.

IN CASE OF CONTROL FAILURE

INSTRUCTIONS FOR OPERATING CAPACITOR SWITCHES IF THE AUTO CONTROLLER OR CONTROL CIRCUIT FAILS.

1. If capacitor is on the line with 3 switches to phase conductors closed:
   a) Remove fuse from capacitor auto controller.
   b) Close ground switch with switch stick.
   c) Open 3 switches to phase conductors.

2. If capacitor is off the line with 3 switches to phase conductors open:
   a) Remove fuse from capacitor auto controller.
   b) Check the ground switch for being closed.
   c) Close 3 switches to phase conductors with switch stick.
   d) Open the ground switch with a switch stick.

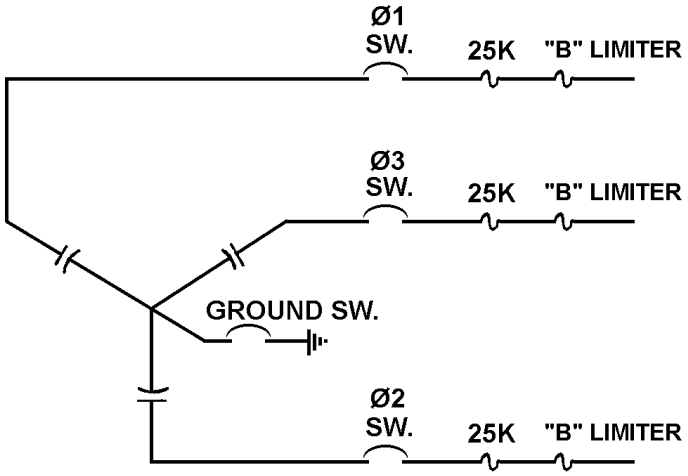

27 KV FAULT LIMITER INSTALLATION

ITEM DESCRIPTION: Fault Limiter

STOCK NUMBERS:

684900	Size “A”
684902	Size ”B”
684905	Size “C”
684920	Size “12K” (Single phase application only)
684907	Size “D”

APPLICATION:

1. Fault Limiters shall be installed on:
   - **a.** All overhead 27/15KV transformers. As specified by DU 11-1.
   - **b.** All overhead 27/15KV capacitors, as specified by DU 11-1.
   - **c.** All overhead to underground 27/15KV installations, as specified by DU 11-1.
2. Always connect fault limiters in series with a fuse cutout.
3. With the fault limiter installed on the lower end of a fuse cutout, keep cutout exhaust clear of the connecting conductor, the limiter, and any other grounded parts. If necessary, replace the conductor with new insulated wire.

MOUNTING:

Direct Mounting; Connect the fault limiter to the bottom of the cutout using a connector bar.

OR

Connector Bar Mounting; Connect the fault limiter to the bottom of the cutout using a connector bar.

NOTE: Under no circumstances connect the fault limiter to the top of the cutout.

684910 684912

DIRECT MOUNTING

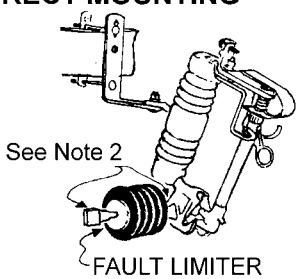

NOTES:

1. #2/0 Al. Anderson Compression Sleeve, Stk. No 650102. Use VC-6 press making four indents as shown:

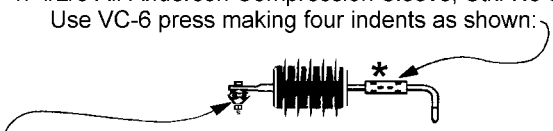

2. Insert a 1-1/2" piece of #1/0 or #2/0 bar wire in the vacant side of all connectors before tightnening. This will prevent rotation and breakage of bolt. (Parallel grove connector only)
3. *Make indent on top of connector at each end, then rototate press 90 degrees for the two center indents. In no case should the indents be placed in the center on the top of the connector.
4. For mounting size "D" fault limiter, reinforced connector bar Stk. No. 684912 is required. Other sizes of limiters may use standard connector bar Stk. No. 694910.

CONNECTOR BAR MOUNTING

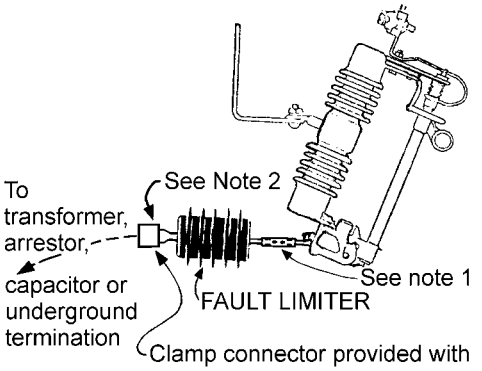

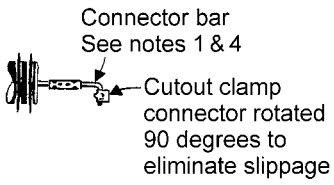

Connector Bar, Stk. No. 684910

Reinforced Connector Bar, Stk. No. 684912

ORIGINATOR	STANDARDS COORDINATOR	STANDARDS SUPERVISOR	UNIT DIRECTOR
James E. Perry	Charles L. Shaffer	John Schimmer	Harden Jay

dummy tab front - D12 - D16

dummy tab back - D12 - D16

LUMINAIRE ALIGNMENT

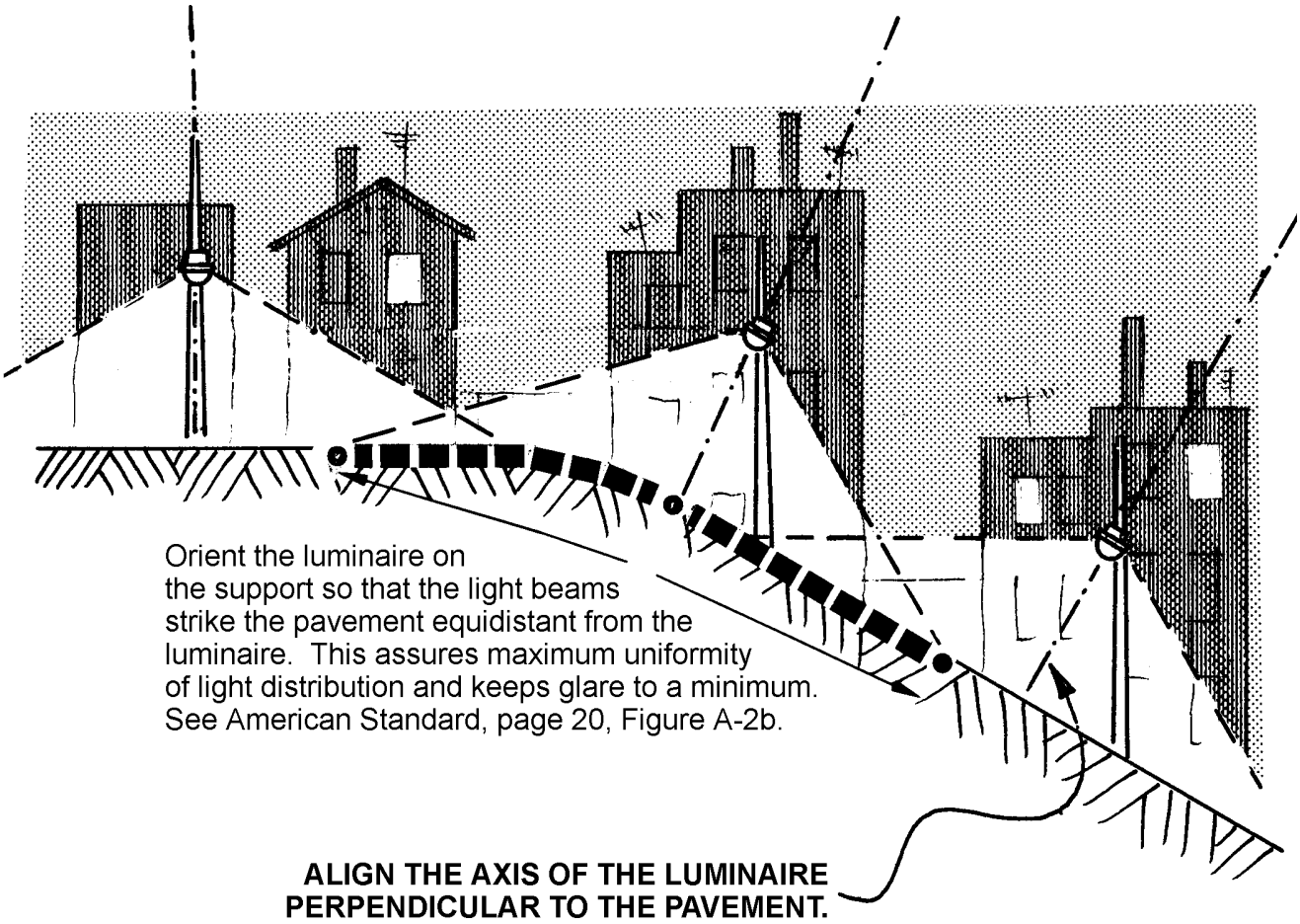

Reference: *American Standard Practice For Roadway Lighting*

ORIGINATOR	STANDARDS COORDINATOR	STANDARDS SUPERVISOR	UNIT DIRECTOR
Jim S. Horn	Charles L. Straffer	John E. Skinner	Betty Robin

SEATTLE CITY LIGHT

CONSTRUCTION GUIDELINE

STANDARD NUMBER: **D12-20**
PAGE: 1 of 1
SUPERCEDING: June 4, 2001
EFFECTIVE DATE: October 19, 2005

FLOODLIGHT INSTALLATION DETAILS, DIRECT POLE MOUNT

Note

Ground the mast arm to the secondary neutral or communications messenger if it is less than 40 inches above communications cables.

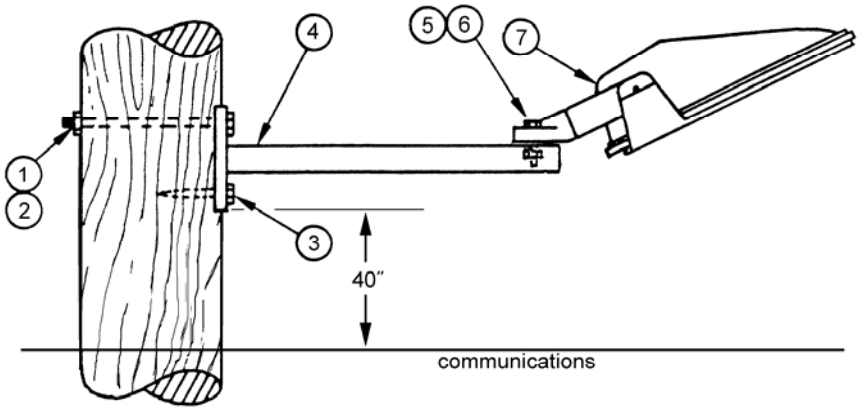

100 - 150 - 250 - 400 Watt Installation

Material List

Item	Quantity	Description	Stock No.
1	1 BOLT,	5/8 x Length	as required
2	1 WASHER,	2-1/4 Square	585135E
3	1 LAG,	1/2 x 4 Fetter Drive	785261E
4	1 BRACKET,	Floodlight	568044
5	1 SCREW,	Cap, 5/8 x 1-1/2	784887E
6	1 WASHER,	5/8 Split Lock	788126E
8	1 FLOODLIGHT		
		100 watt	568161
		150 watt	568163
		250 watt	568168
		400 watt	568166
9	2 CLAMP,	Parallel Groove	652020E

STANDARDS COORDINATOR	STANDARDS SUPERVISOR	UNIT DIRECTOR
Charles L. Shaffer	John C. Skinner	Hardie Frey

SEATTLE CITY LIGHT

CONSTRUCTION GUIDELINE

STANDARD NUMBER: **D13-1**
PAGE: 1 of 1
SUPERCEDING: April 3, 2003
EFFECTIVE DATE: November 18, 2005

SECONDARY SERVICE DETAILS

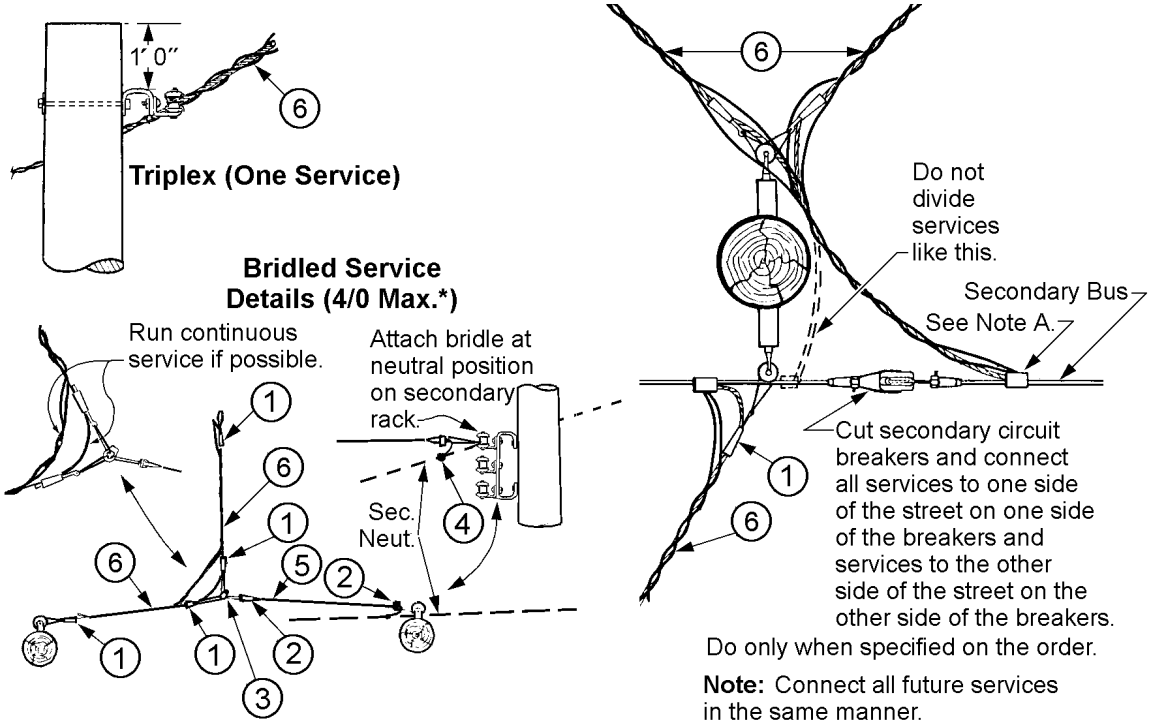

Note: See Construction Guideline DU5-5 for connector details.

Material List

Item	Quantity	Description		Stock No.	Material Standard
1	as required	CLAMP, wedge	#4-#2	581340E	5813.3
		Note: Ignore manufacturers' markings, follow this table instead.	#2-1/0	581342E	5813.3
			2/0-4/0	581344E	5813.3
2	2	DEADEND, automatic, #4		581308E	5813.1
3	1	NUT, oval eye, 5/8		565252E	5652.1
4	2	CONNECTOR, tap, split bolt, #4-#4		668864E	6688.7
5	as required	WIRE #4, bare, Cu, hard drawn **or**		610008	6100.1
		#4 poly, Cu, medium hard drawn		611392	6114.5
6	as required	SERVICE CABLE*, triplex or quadruplex			
		#2 triplex	(#4 neutral)	600672	6007.5
		#2 quadruplex	(#2 neutral)	600734	6007.5
		#2 triplex, coil	(#4 neutral)	600673	6007.5
		1/0 triplex, coil	(#2 neutral)	012580	none
		1/0 triplex	(#2 neutral)	600664	6007.5
		1/0 quadruplex	(1/0 neutral)	600735	6007.5
		4/0 triplex	(2/0 neutral)	600669	6007.5
		4/0 quadruplex	(4/0 neutral)	600738	6007.5

* For services larger than 4/0, contact Engineering.

STANDARDS COORDINATOR	STANDARDS SUPERVISOR	UNIT DIRECTOR

AMPACT TAP CHART

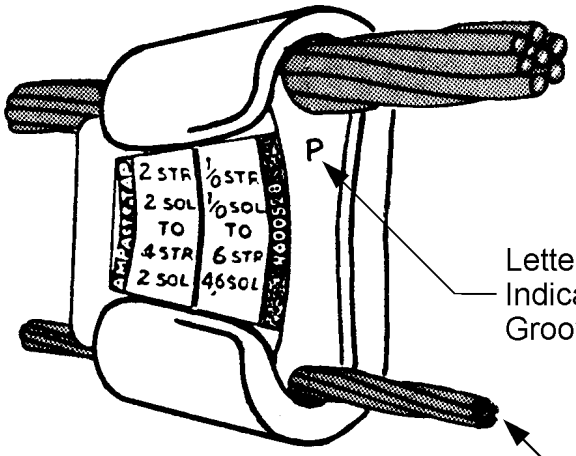

Letter or Number Indicates the Larger Groove in Each Wedge

Copper Conductor on Bottom

Always allow room for the piggy-back clamp for hot-stick removal of Ampact tap.

Install taps with the narrow end of the wedge facing the pole to give working space for tools and to prevent hammer rebound from breaking insulators.

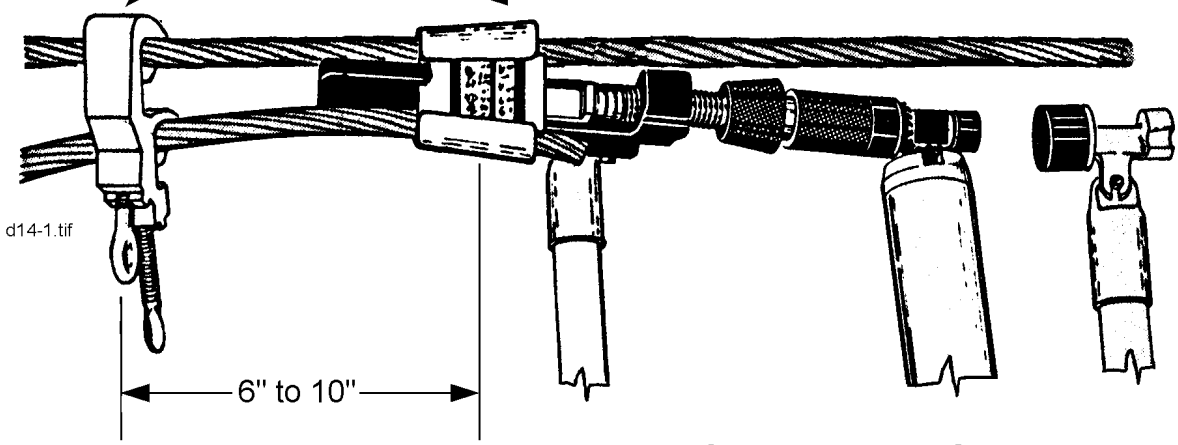

d14-1.tif

Drawing Shows Removal Operation

STANDARDS COORDINATOR	STANDARDS SUPERVISOR	UNIT DIRECTOR
Charles L. Shaffer	John C. Skinner	Hardie Jay

AMPACT TAP – CHART A

#2-7 Str. Al or Cu	1/0-7 Str. Al or Cu	2/0-7 Str. Al or Cu	2/0-6/1 ACSR	1/0-4/3 AWAC	4/0-7 Str. Al or Cu	4/0-6/1 ACSR	250-19 Str. Al or Cu	300-19 Str. Al or Cu	336.4-19 Str. AAC	350-19 Str. Al or Cu	336.4-26/7 ACSR	397.5-19 Str. AAC	397.5-18/1 ACSR	447-30/7 ACSR	500-37 Str. Al or Cu	795 AAC	795 ACSR	954 AAC	954 ACSR	
M					B	B		D	D	D	D	D	D							**#4 Solid Cu**
M	M	NB	BN	M	NB	B		D	D	D	D	D	D							**#2 Solid Cu**
M	M			M	B	B		D	D	D	D									**#4-6/1 ACSR**
M	N	N	AN	N	A	A														**#2-7 Str. Al or Cu**
		A	A		AL	L		E	E	E	E	E	E	I	I					**1/0-7 Str. Al or Cu**
		A	A	M	L	CE	CEF	EF	EF	EF	EF	EF	EF	I	I					**2/0-7 Str. Al or Cu**
			A		C	C	CE	E	E	E	E	E	E	I	I					**2/0-6/1 ACSR**
					AL	AL	E	E	E	E	E	E	E	I	I					**1/0-4/3 AWAC**
					C*C**	C	CF	F	F	F	F	F	F	I	I					**4/0-7 Str. Al or Cu**
						CEF	EF	F	FG	FGI	FGI	FGI	FGI	I	I					**4/0-6/1 ACSR**
								G	FGI	FGI	FGI	FGI	GI	K	IK					**250-19 Str. Al or Cu**
								FG	FG	GI	GI	GI	GI	IK	IK					**300-19 Str. Al or Cu**
									G	G	GK	GK	GK	K	K					**336.4-19 Str. AAC**
										GK	GK	GK	GK	K	K					**350-19 Str. Al or Cu**
											GK	GK	GK	H	HK			S		**336.4-26/7 ACSR**
												GK	K	H	HK				S	**397.5-19 Str. AAC**
														H	HK				S	**397.5-18/1 ACSR**
														TH	H			T	T	**447-30/7 ACSR**
															H			R	R	**500-37 Str. Al or Cu**
																T	T	PT	PT	**795 AAC**
																	OP	OP	O	**795 ACSR**
																		OP	OP	**954 AAC**
																			O	**954 ACSR**

AMPACT TAP – CHART B

Code	Ampact No.	Stock No.	Main	Tap
A	600411	651090	2/0	2/0
B	600456	651099	4/0	#4 sol.
C	600466	651091	4/0	4/0
C*	*275187-6*	*651116**	*4/0 Cu*	*4/0 Cu*
D	602013	651092	300, 397.5	#4 sol.
E	602002	651093	250, 397.5	2/0
F	602004	651094	250, 397.5	4/0
G	602007	651095	336.4	336.4
H	1-602031-3	651096	477	500
I	1-602031-8	651097	477-2/0	4/0
K	1-602031-4	651101	397.5	397.5
L	600458	651102	4/0	#1, 1/0
M	602283-1	651106	1/0 str. Al	#2 sol Cu
N	600403	651105	#2 ACSR	#2 str Cu
O	602180-2	651107	954 ACSR	954 AAC or ACSR
P	602180-3	651108	954 ACSR	795, 954 AAC
R	602180-7	651113	954 ACSR	500 Cu
S	602180-8	651100	954 ACSR	397.5 ACSR
T	602180-4	651109	795 ACSR	795 AAC

To use the charts: In **Chart A**, identify the required wire size across the top row and follow that column down to the row matching the required wire size in the right column. At the intersection of the column and the row, note the letter code. In **Chart B**, using the letter code from **Chart A**, find the appropriate tap.

Example, To connect 4/0-7 strand to 397.5 ACSR: In **Chart A** find the column labled "397.5-18/1 ACSR" and the row labeled "4/0-7 str AL or CU." Find the "F" in the box at the intersection of the above column and row. In **Chart B**, go to the row labeled "F" under "Code" and find SCL Stock No. 651094.

Use for Cu tower crossing only.

DISTRIBUTION CONDUCTOR SAG

Sag Depth, inches

Temperature	#4 Through #4/0 Copper, #4/0 & 336.4 AAC Poly, 397.5 & 477 ACSR, PAC Secondary					954 kcmil ACSR "RAIL", 795 kcmil AAC "ARBUTUS" (See Note D)				
F° ▶	0	30	60	90	120	0	30	60	90	120
C° ▶	-18	-1	16	32	49	-18	-1	16	32	49
Span Length feet										
100	5	7	9	11	13	5	8	10	13	15
125	8	11	14	17	20	8	13	15	20	23
150	12	16	20	25	29	12	19	22	30	34
175	16	21	28	34	39	17	26	31	41	47
200	21	28	36	44	52	22	33	40	53	61
250	33	44	57	69	81	34	53	63	83	95
300	48	64	82	100	117	49	76	91	120	138

Notes:

A. Design based on equal sag of all conductors at 60° F.

B. Design loading is 1/4 inch ice and 4 lb/ft^2 wind at 15° F.

C. Ruling span is 175 feet.

D. Sag determined by maximum tension of 2800 lbs. in Note B.

STANDARDS COORDINATOR	STANDARDS SUPERVISOR	UNIT DIRECTOR
Charles L. Shaffer	John C. Skinner	Harden Jay

SEATTLE CITY LIGHT

CONSTRUCTION GUIDELINE

STANDARD NUMBER: **D14-3**
PAGE: 1 of 1
DATE: April 10, 2002
REV: September 30, 2003

BARE CONDUCTORS MECHANICAL AND ELECTRICAL PROPERTIES

BARE CONDUCTORS MECHANICAL AND ELECTRICAL PROPERTIES

Stock No.	Ultimate Strength Pounds	Code Word	Size #AWG or kcmil	Number of Wires	Overall Diameter Inches	Weight Lbs./K ft.	Phase to Neutral 75º C, 60 Hz, 1 Ft. Equivalent Spacing: Inductive X_L ohms/K ft.	Phase to Neutral 75º C, 60 Hz, 1 Ft. Equivalent Spacing: *Note 2* Capacitive X_c K ohms/K ft.	Resistance 60 Hz, 50º C ohms/K ft.	Normal Conductor Temp.	*Note 1* Ampacity Rating: Winter at 10º C, Wind and No Sun	*Note 1* Ampacity Rating: Summer at 30º C, Wind and Sun	*Note 3* Temp. Coefficient of Resistance a at 50º C
Normal Conductor Temperature 80º C													**97.5% IACS**
610008	1,970	–	#4 CU, HD	1	0.2043	0126.3	0.1153	0.7471	0.28470	80º C	185	150	0.00344
610006	3,003	–	#2 CU, HD	1	0.2576	0200.9	0.1100	0.7102	0.17900	80º C	250	200	0.00344
610434	2,110	–	#2 CU, SD	7	0.2920	0204.9	0.1087	0.6906	0.18260	80º C	255	205	0.00344
610521	4,642	–	#2/0 CU, MHD	7	0.4140	0411.0	0.1008	0.6362	0.09110	80º C	400	315	0.00344
610425	4,062	–	#2/0 CU, SD	7	0.4140	0411.0	0.1008	0.6362	0.09110	80º C	400	315	0.00344
610524	7,281	–	#4/0 CU, MHD	7	0.5220	0653.4	0.0953	0.5998	0.05740	80º C	540	425	0.00344
610414	6,453	–	#4/0 CU. SD	19	0.5280	0653.4	0.0941	0.5977	0.05740	80º C	540	425	0.00344
610415	–	–	#4/0 CU, SD	133	0.5990	0668.0	0.0941	0.5977	0.05740	80º C	565	440	0.00344
610412	7,940	–	250 CU, SD	37	0.5750	0772.0	0.0922	0.5850	0.04870	80º C	605	470	0.00344
610413	–	–	250 CU, SD	259	0.6530	0795.0	0.0922	0.5850	0.04870	80º C	625	490	0.00344
610409	13,510	–	300 CU, HD	19	0.6290	0926.3	0.0902	0.5702	0.04070	80º C	680	530	0.00344
610407	12,200	–	350 CU, MHD	19	0.6790	1080.7	0.0883	0.5586	0.03490	80º C	750	580	0.00344
610397	15,240	–	500 CU, SD	37	0.8140	1543.8	0.0839	0.5301	0.02470	80º C	940	725	0.00344
Normal Conductor Temperature 90º C													**61.2% IACS**
600012	8,350	Penguin	#4/0 ACSR	6/1	0.5630	0291.1	0.1053	0.5966	0.10663	90º C	425	345	0.00361
600018	14,100	Linnet	336.4 ACSR	26/7	0.7200	0462.6	0.0854	0.5491	0.05680	90º C	625	505	0.00361
600020	9,940	Chickadee	397.5 ACSR	18/1	0.7430	0431.6	0.0856	0.5438	0.04870	90º C	685	555	0.00361
600021	16,300	Ibis	397.5 ACSR	26/7	0.7830	0546.6	0.0835	0.5386	0.04810	90º C	705	565	0.00361
ex600026	23,800	Hen*	477 ACSR	30/7*	0.8980	0760.0	0.0803	0.5174	0.03980	90º C	805	645	0.00361
600040	31,500	Drake	795 ACSR	26/7	1.1080	1094.0	0.0756	0.4815	0.02420	90º C	1,105	880	0.00361
600041	38,400	Mallard	795 ACSR	30/19	1.1400	1235.0	0.0744	0.4773	0.02410	90º C	1,115	890	0.00361
600042	25,900	Rail	954 ACSR	45/1	1.1650	1076.0	0.0748	0.4736	0.02060	90º C	1,215	970	0.00361
Normal Conductor Temperature 80º C													**61.2% IACS**
600112	6,150	Tulip	336.4 AAC	19	0.6660	0315.8	0.0888	0.5597	0.05780	80º C	575	450	0.00361
600113	7,110	Canna	397.5 AAC	19	0.7240	0373.2	0.0689	0.5491	0.04890	80º C	645	500	0.00361
600121	13,900	Arbutus	795 AAC	37	1.0260	0746.4	0.0786	0.4937	0.02480	80º C	1,005	770	0.00361
600126	16,900	Goldenrod	954 AAC	61	1.1260	0896.1	0.0763	0.4794	0.02080	80º C	1,130	860	0.00361
600128	18,300	Larkspur	1,033.5 AAC	61	l.1720	0970.7	0.0754	0.4731	0.01930	80º C	1,190	905	0.00361

credit: ksj (1986)

*Not standard "Hen". 7 Steel strands of 0.130 inch dia. and 30 aluminum strands of 0.127 inch dia.

Notes:
1. 0.5 emissivity, 2 feet per second wind at 15º to conductor, sun at, noon, latitude 48º north, sea level.
2. Shunt capacitive reactance (megohms per 1000 ft.) varies inversely with line length.
3. aT is used to calculate resistance at other temperatures: $R_{T2} = R_{T1}\,[1+a_{T1}\,(T2 - T1)]$.

ORIGINATOR	Charles J. Shaffer
STANDARDS COORDINATOR	Kenneth Korn
STANDARDS SUPERVISOR	Ted Weinberg
UNIT DIRECTOR	Andrew Fry

BOLTED CONNECTION

Item	Description		Stock No.	Mtl. Std.
1	FASTENER ASSEMBLY, Aluminum,	1/2" x 1-3/4"	782050	7820.0
		1/2" x 2"	782051	7820.0
		1/2" x 2-1/2"	782053	7820.0
		1/2" x 3-1/2"	782052	7820.0
2	BOLT, Silicon Bronze,	1/2" x 1-1/2"	784587E	7845.1
		1-1/2" x 1-3/4"	784588E	7845.1
		1-1/2" x 2"	784589E	7845.1
3	NUT, 1/2" Silicon Bronze		783325E	7833.3
4	WASHER, Flat Bronze, 1/2"		788026E	7880.2
5	WASHER, Bronze Lock		788125E	7880.2
7	NUT, Aluminum, 1/2"		783558	–
8	WASHER, Al. Flat 1/2"		788253	–
9	WASHER, Al. Lock 1/2"		788273	–
10	BOLT, Aluminum,	5/8" x 2"	781813	–
		5/8" x 2-1/2"	781815	–
		5/8" x 3"	781817	–
11	NUT, Aluminum, 5/8"		783560	–
12	WASHER, Al. Flat, 5/8"		788254	–
13	WASHER, Al. Lock, 5/8"		788274	–

Place one Stainless Steel flat washer under Belleville washer and nut on copper side of joint.

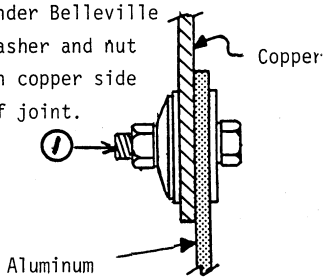

Aluminum-Copper

When using Belleville washer with Al. Bolt tighten until a sudden stop is felt. DO NOT back off.

Note-- See DU5-1/NSV-30 for prepartation of Bolted Joints.

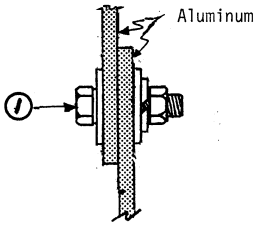

Aluminum-Aluminum

1/2" Bolts for Al. Service entrance connnector plates, and Al. lug to Al. neutral bus.

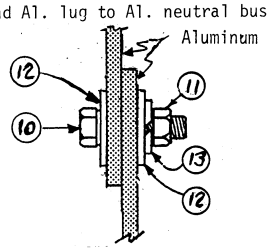

Aluminum-Aluminum

5/8" Bolts for Al. neutral bus to bus, IWCB channel, plates & IWCB lugs.

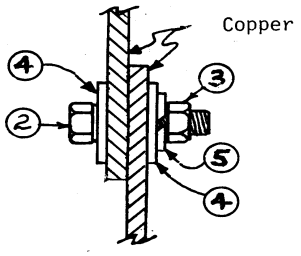

Copper-Copper

Max. Torque is 40 ft./lbs. for 1/2" Bronze bolt.

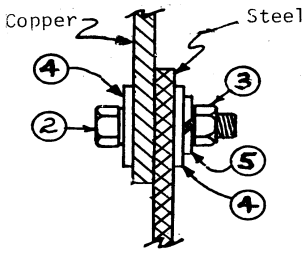

Copper-Steel

ORIGINATOR	STANDARDS COORDINATOR	STANDARDS SUPERVISOR	UNIT DIRECTOR
Keith "BHAG HOG" Rosend	Jim S. Horn	John Skinner	Betty Robin

MATERIAL SUMMARY FOR BOLTED ELECTRICAL CONNECTIONS

D14-4M3.XLS	Al Bellville Kit Assembly (Note 1)				Stainless Steel Bellville Kit Assembly			1/2" Al Bolt & Flat/ Lock Washer Assembly (Note 2)						5/8" Al Bolt & Flat/ Lock Washer Assembly (Note 3)						Silicon Bronze Bolt & Flat/Lock Washer Assembly (Note 4)					
	782050 Bellville Kit 1/2" x 1-3/4"	782051 Bellville Kit 1/2" x 2"	782053 Bellville Kit 1/2" x 2-1/2"	782052 Bellville Kit 1/2" x 3-1/2"	782040 Bellville Kit 1/2" x 1-1/2"	782041 Bellville Kit 1/2" x 2"	782042 Bellville Kit 1/2" x 2-1/2"	781809 Bolt, 1/2" x 2"	781811 Bolt, 1/2" x 2-1/2"	781812 Bolt, 1/2" x 3"	783558 Nut, 1/2"	788253 Flat Washer, 1/2"	788273 Lock Washer, 1/2"	781813 Bolt, 5/8" x 2"	781815 Bolt, 5/8" x 2-1/2"	781817 Bolt, 5/8" x 3"	783560 Nut, 5/8"	788254 Flat Washer, 5/8"	788274 Lock Washer, 5/8"	784578E Bolt, 1/2" x 1-1/2"	784589E Bolt, 1/2" x 2"	784588E Bolt, 1/2" x 1-3/4"	783325E Nut, 1/2"	788026E Flat Washer, 1/2"	788125E Lock Washer, 1/2"
Single Cu Lug - Al Bus	X				X																				
Double Cu Lug - Al Bus	X					X	X																		
Single Al Lug - Single Cu Bus	X					X																			
Single Al Lug - Double Cu Bus		X	X				X																		
Double Al Lug - Single Cu Bus		X	X				X																		
Double Al Lug - Double Cu Bus			X	X			X																		
Single Al Lug - Al Bus		X						X			X	X	X												
Double Al Lug - Al Bus									X		X	X	X												
Al Neutral Bus to Bus														X			X	X	X						
Single Al Lug - IWCB/Conn. Plt.*																X	X	X	X						
Double Al Lug - IWCB/Conn. Plt.*																	X	X	X						
Conn. Plt.-IWCB															X		X	X	X						
Single Cu Lug - Single Cu Bus																				X			X	X	X
Double Cu Lug - Single Cu Bus																						X	X	X	X
Single Cu Lug - Double Cu Bus																						X	X	X	X
Double Cu Lug - Double Cu Bus																					X		X	X	X
Cu Bus to Cu Bus																				X			X	X	X

Note 1: Alum. or stainless steel Belleville kit assembly to be used for all Cu to Al bolted connections. Tighten until nut comes to snug stop.

Note 2: 1/2" Al flat/lock washer assembly to be used for Al lug-to-Al neutral bus, and Al lug-to-Al service entrance connector plate. Torque to 25 Ft-Lbs

Note 3: 5/8" Al flat/lock washer assembly to be used for IWCB connector plate-to-IWCB channel, and for Al lug-to-IWCB connector plate or channel. Al neutral bus-to-bus 4-bolt connections. Torque to 55 Ft-Lbs

Note 4: Bolted connection to be used for all Cu lug-to-Cu bus connections, and for Cu bus-to-bus 4 bolt connections. (Stock items are exempt) Torque to 40 Ft-Lbs

Note 5: Bolts Indicated are minimum length. Longer bolts can also be used.

* For 750 kcmil Al compact round cable lug terminations, use Stock No. 651275 to connect to IWCB connector plate, and use Stock No. 651274 for all other lug terminations.

SEATTLE CITY LIGHT

CONSTRUCTION GUIDELINE

STANDARD NUMBER: **D14-6**
PAGE: 1 of 1
DATE: March 23, 1972
REV: July 15, 2003

DISTRIBUTION LINE CONNECTIONS

CONNECTOR

APPLICATION	Aluminum Feeders	Copper Feeders
Feeder Corners **Switches** **C.B.'s** **Unfused Laterals** **Unfused U.G. Taps** **Sectionalizers**	**Ampact Tap** **See D14-1** 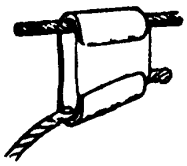	**Ampact Tap or** **2-Bolt Bronze**
26 kV Only **Transformers** **Fused Laterals** **Fused U.G. Taps**	**Stirrup and Bronze** **Hot Line Clamp** 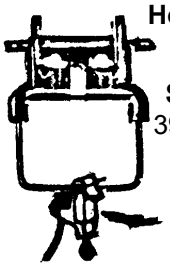 **Stirrup** 397.5-954 **Stock No.** 580678 #2/0 Bail Use 580725E or 580727	**Bronze** **Hot Line Clamp** **Conductor Size** **Stock No.** / **Main** / **Tap** 580725E / #8 Sol to 2/0 / #8 Sol to 2/0 580727 / #6 to 400 / #6 Sol to 4/0
Bolted **Connections**	**Aluminum to Copper** **See D14-4** 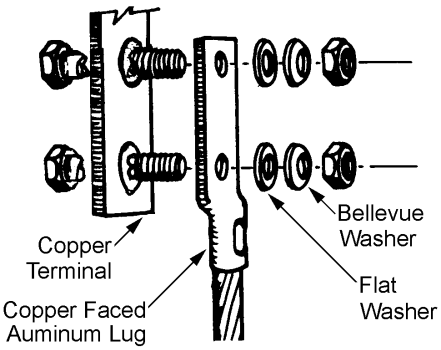 **Aluminum Jumper**	**Copper to Copper** **See D14-4** 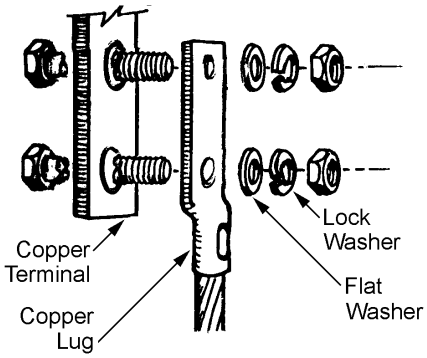 **Copper Jumper**

ORIGINATOR	STANDARDS COORDINATOR	STANDARDS SUPERVISOR	UNIT DIRECTOR
Jim S. Horn	Charles L. Shaffer	John Skimmer	Hardie Jay

TOOL AND DIE CROSS-REFERENCE FOR CONNECTORS

COPPER "C" & "H" CONNECTORS

Connector Stock No.	Type	Run Wire Size	Tap Wire Size	Tool & Die		
				MD-6	Y35/Y39	T&B 12-15 Ton
677323E	C	#4	#4	W-BG (2)	U-BG (1)	–
677325E	C	#2	#4	W-C (2)	U-C (1)	–
677326E	C	#2	#2	W-C (2)	U-C (1)	–
677329E	C	1/0 to 2/0	1/0 to 2/0	–	U-O (3), U-E (1)	–
677330E	H	2/0 to 4/0	#4	–	D, D3 (1), DAD	–
677331E	H	2/0 to 4/0	1/0 to 2/0	–	D, D3 (1), DAD	–
677332E	H	2/0 to 4/0	2/0 to 4/0	–	D, D3 (1), DAD	–
677333	C	250 to 350	3/0 to #6	–	–	106H (black)
677336	C	2/0 to 300	2/0 to #8	–	–	99H (pink)

ORIGINATOR	STANDARDS COORDINATOR	STANDARDS SUPERVISOR	UNIT DIRECTOR
Jim S. Horn	Charles L. Shaffer	John Schimmer	Harold Jay

SEATTLE CITY LIGHT

CONSTRUCTION GUIDELINE

STANDARD NUMBER **D14-8/ NSV-10**

PAGE 2 of 3

COPPER CONNECTORS
Connector Tool and Die Cross Reference

Common Tool Die Index	AWG or kcmil	Connector O.D.	Blackburn		Somerset – T & B			Kearney		Burndy				Burndy BCT500 Huskie REC-458U or 358
			O.D. 58 Hand	JB12A Hyd	Hand	Hyd	T&B Color	"O"	"WH"	Die Index	MD6 Hand	Y35/Y39 Hyd★	Y46 Hyd	
			–	–	–	24	Blue	–	–	7	–	U5CRT-2	–	W5CRT
8	4	0.34	5/16 BY 19	5/16	TJ	29	Gray	5/16	5/16	8, 161, 242 (244)	W161-2, W242-4	U4CRT-2, U161(U6CYDMT)-1, U242(U26RSYFT)-2	P242-1	W4CRT
10	2	0.42	3/8 BY 21	3/8	TL-TN	33	Brown	3/8	3/8	10, 162	W162-5	U2CRT-2, U162(U4CYDMT)-1	P162	W2CRT
11	1	0.46	–	–	TL-TN	37	Green	–	–	11, 276	–	U1CRT-2, U276(U6WKYDT)-4	–	W1CRT
12	1/0	0.51	1/2 BY 23	B96CH	TB	42	Pink	1/2	1/2	12, 163	W163-4	U25RT-2, U163-2	P163-2	W25RT
13	2/0	0.56	9/16 BY 25	B72CH	TS	45	Black	9/16	9/16	13, 164(275), 241	W164-4, W241-3	U26RT-2, U164(U1CYDMT)-2, U241(U1RYFT)-2	P164-2, P241-1	W26RT
14	3/0	0.62	9/16 BY 25	B08CH	TU	50	Orange	9/16	9/16	14, 243	W243-3	U27RT-2, U243(U25RYFT)-2	P243	W27RT
15	4/0	0.69	5/8-1 BY 31	B09CH	TW-TY	54	Purple	5/8-1	5/8-1	15, BG, 243	W-BG-2, W243-3	U28RT-2, U-BG-2, U243(U25RYFT)-2	P28R-2, P243-1	W28RT
16	250	0.75	11/16 BY 27	B10CH	TW-TY	62	Yellow	11/16	11/16	16, 166(206)	W166	U29RT-2, U166(U26YDT)-1	P166-1	W29RT
17	300	0.81	–	–	TV	66	White	–	781	17(C), 167(207), 211(256)	W-C -8, W167-8	U30RT-4, U-C(3), U167(U27YDT)-4	P 30R-2, P167-2	W30RT
18	350	0.88	840 BY 37	B11CH	TX	71	Red	–	840	18, 168(208)	W-O	U31RT-4, U168(U28YDT)-5	P31R2, P168-2	W31RT
20	500	1.06	–	B12CH	TH	87	Brown	–	1, 1 1/2	20, 251	–	U34RT-4, U251(U30RYFT)-7	P34R2, P251-2	W34RT
22	600	1.157	–	–	–	–	–	–	–	22	–	U36RT	P36RT	–
24	750	1.30	–	S39RT, 6039RT	–	106	Black	–	–	24, 209	–	S39RT, U209(U32YDT)	P39R-2, P209-2	–
27	1000	1.578	–	–	–	–	–	–	–	27	–	–	P44RT	–

★ T & B color coded dies will fit Burndy Y35 or Y39 tools.

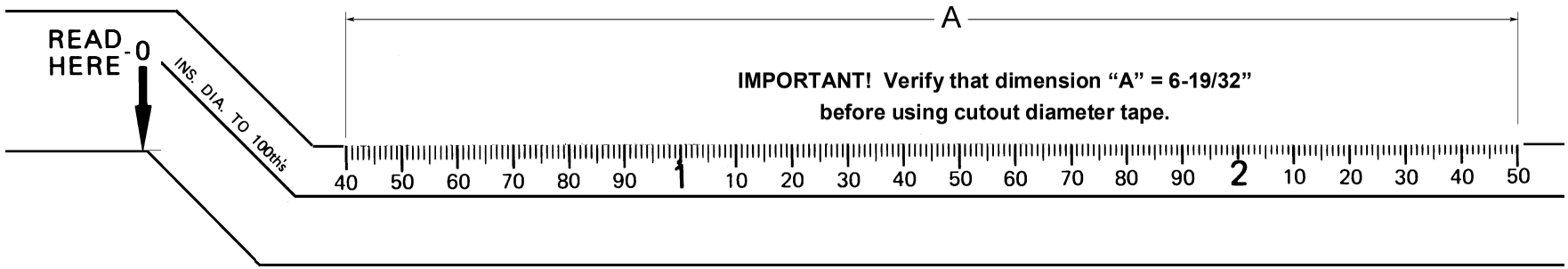

ALUMINUM CONNECTORS

Connector Tool and Die Cross Reference

EEI Die Code	General AWK/kcmil		Connec-tor O. D.	Alcoa			Black-burn	Somerset T & B			Kearney		Burndy				Burndy BAT500 & BCT500, Huskie REC-458U or 358
	Con-centric Round	Compact Round		Alcoa Die Section	J12A Hyd	60 Ton Hyd	JB12A	UT5/TB M8 Hand	12/15 Ton Hyd	T&B Color	"O"	"WH"	Die Index	MD6 Hand	Y35/Y39 Hyd★	Y46 Hyd	
6A	#2	#1	0.531 0.625 Svc die	06AH	B06AH	–	B17EA	TO	45	Gold	1/2	1/2	348, 163, 239	W163 W239	U2CART, U163, U239	–	W163, W239
–	#1	1/0	0.531 0.625 Svc die	06AH	B06AH	–	B17EA	TQ	45	Gold	1/2	1/2	163, 471	W163	U1CART, U163	–	W163
7A	–	–	–	–	B07AH	–	–	–	–	–	–	–	–	–	–	–	–
8A	1/0	2/0	0.625	08AH	B08AH B72AH	–	B24EA	TU	52	–	5/8	5/8	241, 243, 253, 296	BG W241	U25ART, U241, U253, U243	P25AR, P241, P253	W241
9A	2/0	3/0	0.687	09AH	B09AH	–	B30EA	TW, TY	58, 58H	–	5/8	5/8	245, 297, BG BG	WBG W245	U26ART, U245, UBG	P26AR, P245	W245
10A	3/0	4/0	0.760	10AH	B10AH	–	B49EA	TV	66	White	0.737	0.737	166, 247, 467	W166 W247	U27ART, U166, U247	UP27AR ❖, P247	W166, W247, W694
11A	4/0	250	0.875 0.906 Svc die	11AH	B11AH	6011AH	B49EA	TX	76	Blue	840	840	298, 314, 660	W660	U28ART, U660	P28AR, P314	W249, W660
–	250	300	0.938 0.906 Svc die	11AH	B11AH	6011AH	B49EA	TX	76	Blue	840	840	249, 324, 658, K840	WK840 W249	U29ART, UK840, U249, U658	P29AR, P249	–
12A	300	–	1.010	12AH 75AH	12AH	–	B61EA	–	87, 87H	Brown	–	1.00	251, 470 L	WL	U30ART, U251, UL	P30AR, P251	–
13A	350	350	1.105	13AH	B13AH	6011AH	B80EA	–	96	–	–	1-1/8	299, 317, 705, 654, 655	–	U31ART, U654, U655, U705	P31AR, P654, P705	–
14A	400	400 & 450	1.187	14AH 20AH	B14AH B76AH	6076AH	B20EA	–	106H	Black	–	1-1/8	209, 472, 490	–	U32ART, U209, U490	P32AR	–
15A	500	600	1.320	15AH	B15AH	6020AH	–	–	115H	Yellow	–	1-5/16	209, 300 M, 317	–	U34ART, UM, U209	P34AR, P209	–
–	550	650	1.438	20AH	–	6020AH	–	–	115H	–	–	1-5/16	473	–	–	P36ART	–
–	600	700	1.438	20AH	–	6020AH	–	–	115H	–	–	1-5/16	473	–	–	P36ART	–
–	650	750	1.500 (1.530)	24AH	–	6024AH	–	–	125H	–	–	1-1/2	936	–	U39ART-2	P39ART-2❖	–
–	700 (750)	800	1.594	24AH	–	6024AH	–	–	125H	–	–	1-1/2	301	–	–	P39ART	–
–	750	900	1.625	24AH	–	6024AH	–	–	140H	–	–	1-5/8	301	–	–	P39ART	–
–	954-1000	–	1.840	30AH	–	6030AH	–	–	140H	–	–	1-3/4	–	–	–	P44ART	–

★ T & B color coded dies will fit Burndy Y35 or Y39 tools.

❖ U dies with a Y46 require a P-UDAP adapter.

Use a diameter tape when measuring connector diameters, see page 2.

SEATTLE CITY LIGHT

CONSTRUCTION GUIDELINE

STANDARD NUMBER **D14-8/ NSV-10**

PAGE 3 of 3

BIRD GUARD INSTALLATION

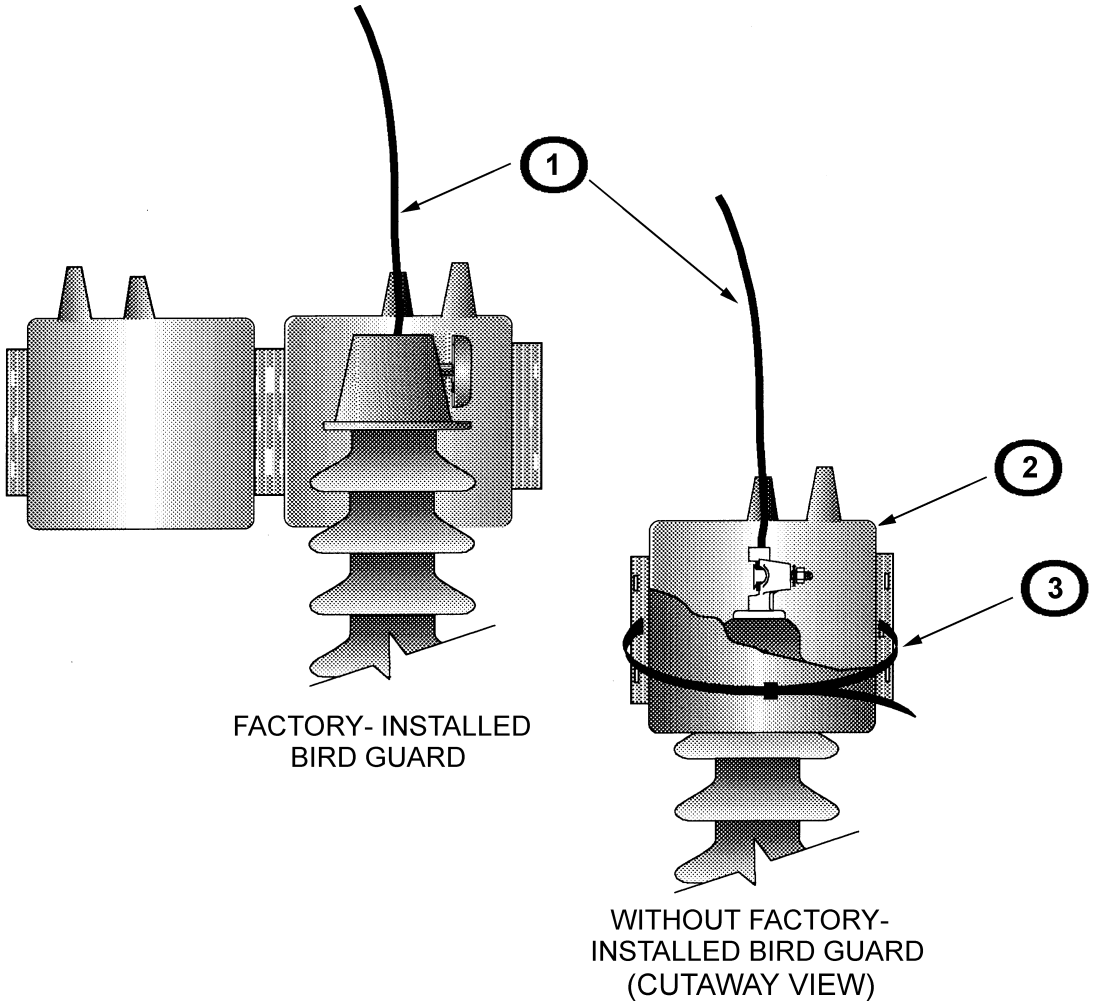

151.TIF

Item	Quantity	Description	Stock Number
1	As Required	Wire #4 Solid S.D. Poly.	611442
2	1	Bird Guard	580776
3	1 or 2	Tie Strap, 20” Black Tie Strap, 14” Black	735812E 735811E

ORIGINATOR	STANDARDS COORDINATOR	STANDARDS SUPERVISOR	UNIT DIRECTOR
	Charles L. Shaffer		Denis DeVries

HAND WRAPPED TIES SINGLE PIN TYPE INSULATOR FOR COPPER OR ALUMINUM POLY COVERED CONDUCTORS

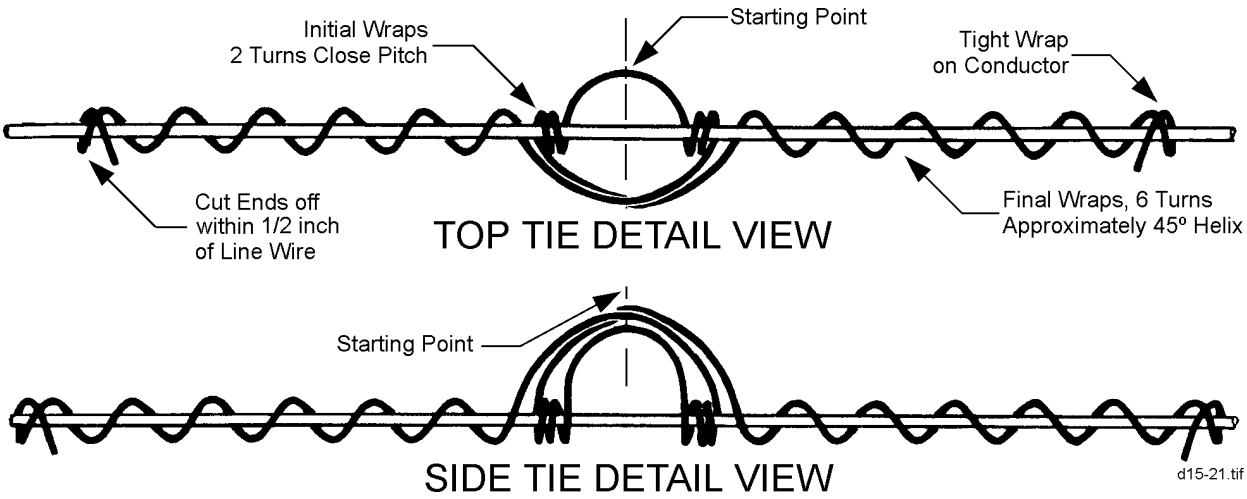

Application

A. Bend annealed tie wire of proper size and length around insulator under the conductor (above the conductor on a side tie) forming a "U". Both legs of the tie wire should be equal length after bending.

B. Holding the tie wire tightly against insulator, throw two tight close wraps around the conductor on each side of the insulator, keeping the wraps snugly against the insulator.

C. Cross the legs of the tie wire around the insulator, right to left and left to right.

D. With both legs of the tie wire crossed, tightly wrap each leg spirally around the conductor at an angle of 45 degrees.

E. Complete six spiral 45 degree wraps on each side of the insulator, bending back the ends and cutting them off short close to the insulator.

Size and Length of Tie Wire

Conductor	No. of Strands	Size of Tie Wire, AWG	Length of Tie Wire*, Inches	
			Top Tie	Side Tie
336.4	7	4	52	58
4/0	7	4	50	56
2/0	7	4	46	52
2	1	6	42	48
4	1	6	38	44
6	1	6	34	40

* Tie wires shall be made from fully annealed copper.

ORIGINATOR	STANDARDS COORDINATOR	STANDARDS SUPERVISOR	UNIT DIRECTOR
Jim S. Horn	Charles L. Shaffer	John Chinn	Betty Robin

HAND WRAPPED SPOOL TIES FOR COPPER OR ALUMINUM POLY COVERED CONDUCTORS

Single Tie

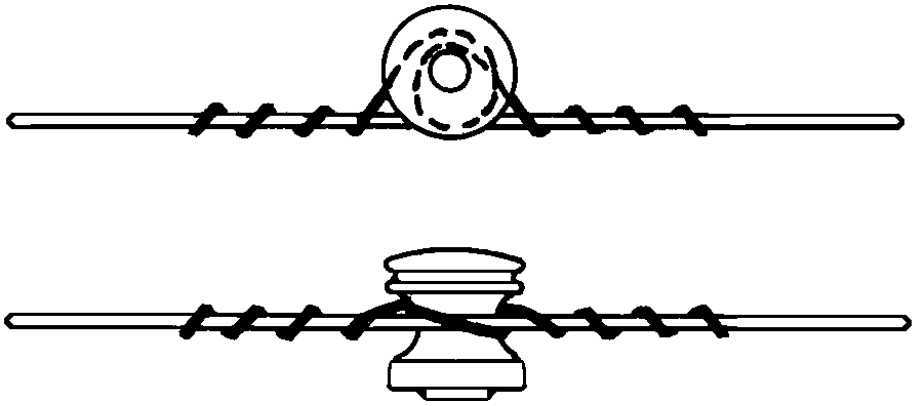

Double Tie

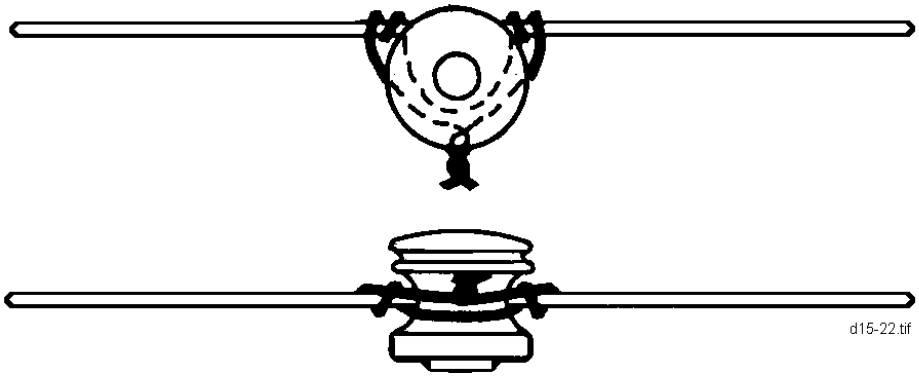

Line Conductor (Cu or Al)	Tie Wire Size (Cu)	Length of Tie Wire, Inches	
		Single Tie	Double Tie
6 Poly	6 Poly	38	30
4 Poly	6 Poly	38	30
2 Poly	6 Poly	38	30
2/0 Poly	4 Poly	38	30
4/0 Poly	4 Poly	38	30

ORIGINATOR	STANDARDS COORDINATOR	STANDARDS SUPERVISOR	UNIT DIRECTOR
Jim S. Horn	Charles L. Shaffer	John Skinner	Betty Robin

INSTALLING SINGLE "HOT" TIE ON SINGLE INSULATOR FOR COPPER OR ALUMINUM CONDUCTORS

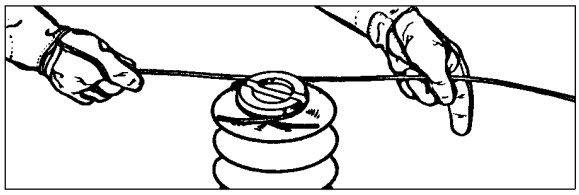

Pulling the ties tight around the insulator.

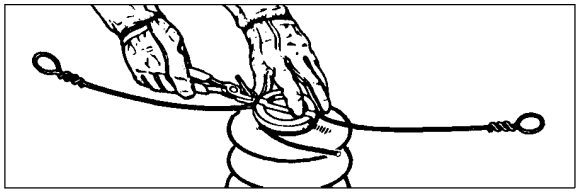

Wraping one of the ties with lineman's pliers.

Notes:

A. Attach ties to insulators using two clockwise twists with pliers.
B. Wrap ties clockwise.
C. Six wraps minimum on the conductor.
D. For #2 conductors and smaller use #6 ties.
E. For conductors larger than #2 use #4 ties.
F. For 2/0 conductors and larger use double ties.
G. Use a 36" length of tie wire for each single tie.
H. Use Al ties with Al wire and Cu ties with Cu wire.

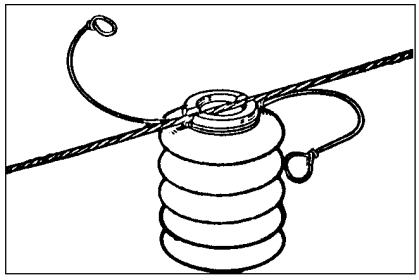

Both single ties in place ready for tying in.

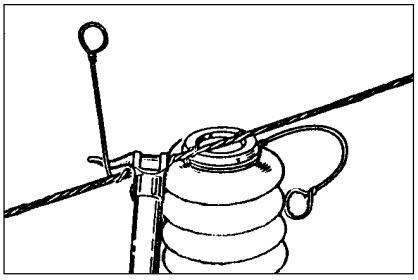

Starting the tying-in process with a rotary prong.

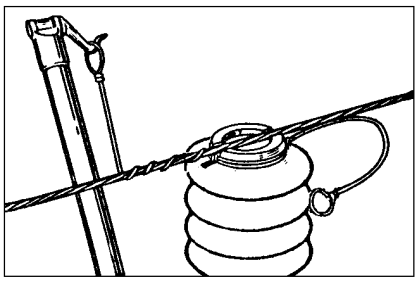

Rotary prong hooked into tie wire loop.

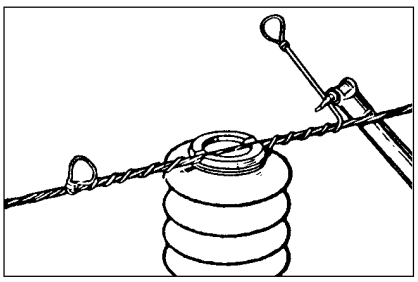

Tying at opposite side of insulator.

d15-23.tif

ORIGINATOR	STANDARDS COORDINATOR	STANDARDS SUPERVISOR	UNIT DIRECTOR
Jim S. Horn	Charles L. Shaffer	John Skinner	Betty Robin

INSTALLING DOUBLE "HOT" TIE ON SINGLE INSULATOR FOR COPPER OR ALUMINUM CONDUCTORS

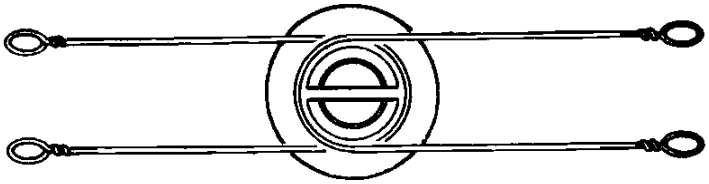

Double ties in place on insulator.

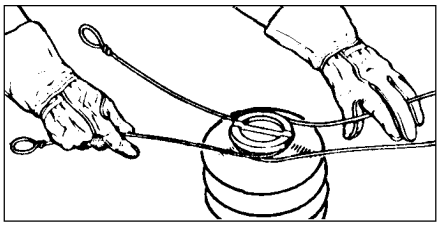

Pulling the double ties tight around the insulator.

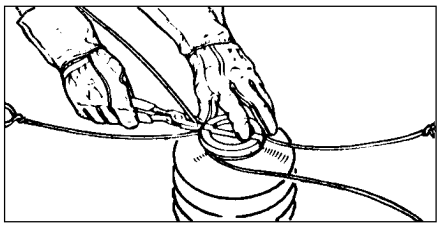

Wrapping one of the ties with lineman's pliers.

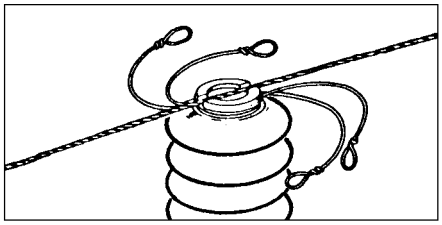

Double ties ready for tying in.

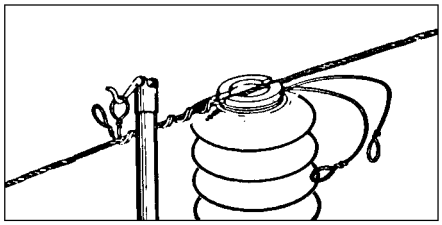

Tying in one side of insulator with a rotary prong.

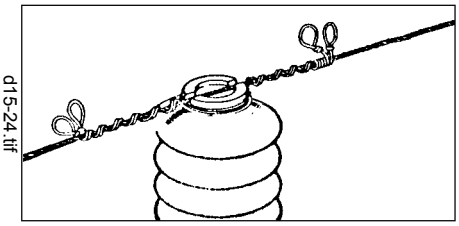

Both sides of the double tie tied in.

Notes:

A. Attach ties to insulators using two clockwise twists with pliers.

B. Wrap ties clockwise.

C. Six wraps minimum on the conductor.

D. For #2/0 conductors and larger use double ties.

E. Use #4 tie wire for double ties.

F. Use a 72" length of tie wire for each double tie.

G. Use Al ties with Al wire and Cu ties with Cu wire.

d15-24.tif

ORIGINATOR	STANDARDS COORDINATOR	STANDARDS SUPERVISOR	UNIT DIRECTOR
Jim S. Horn	Charles L. Shaffer	John Skinner	Betty Robin

INSTALLING DOUBLE TIE ON DOUBLE ARM (TWO INSULATORS) FOR COPPER OR ALUMINUM CONDUCTORS

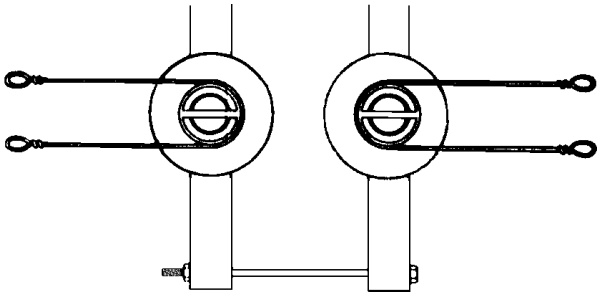

Double ties in place on double arm insulators.

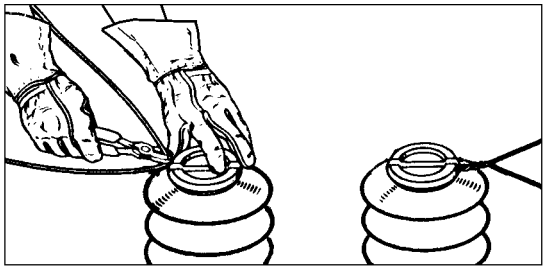

Wrapping the double tie with lineman's pliers.

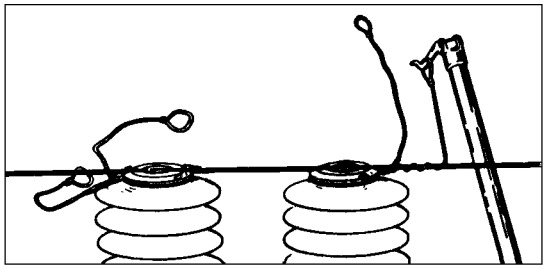

Tying in one side with a rotary prong.

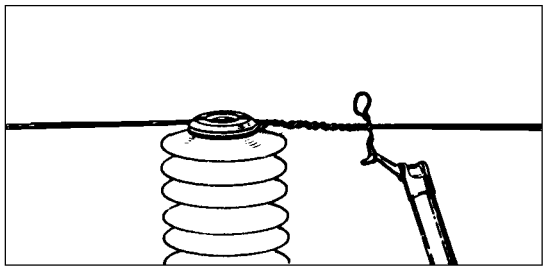

Wrapping both ends of double tie alternately.

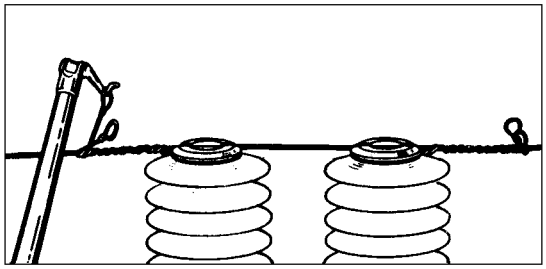

d15-25.tif

Tying in opposite insulator.

Notes:

A. Make up a double tie for each insulator and attach them to the insulators using two clockwise twists with pliers.

B. Wrap ties clockwise.

C. Six wraps mininiim on conductor.

D. For #2 conductors and smaller use #6 ties.

E. For conductors larger than #2 use #4 ties.

F. Use a 72” length of tie wire for each double tie.

G. Use Al ties with Al wire and Cu ties with Cu wire.

ORIGINATOR	STANDARDS COORDINATOR	STANDARDS SUPERVISOR	UNIT DIRECTOR
Jim S. Horn	Charles L. Shaffer	John Skinner	Betty Robin

ANGLE TIE ON SINGLE INSULATOR AND SINGLE SIDE TIE ON HORIZONTAL INSULATOR

FOR COPPER OR ALUMINUM CONDUCTORS

Notes:

A. Make up and attach two ties to the insulator using two clockwise twists with pliers.

B. Wrap ties clockwise.

C. Six wraps minimum on the conductor.

D. For #2 conductors and smaller use #6 ties.

E. For conductors larger than #2 use #4 ties.

F. For 2/0 conductors and larger use double ties.

G. Use a 36” length of tie wire for each single tie.

H. Use a 72” length of tie wire for each double tie.

I. Use Al ties with Al wire and Cu ties with Cu wire.

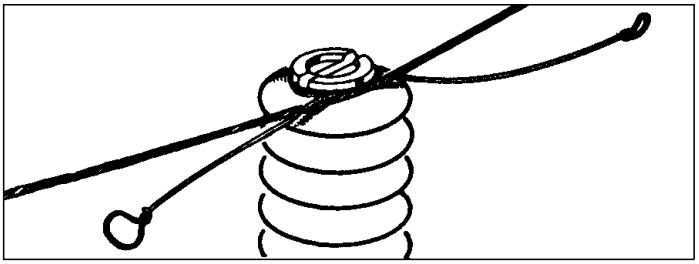

Single angle ties ready for tying in.

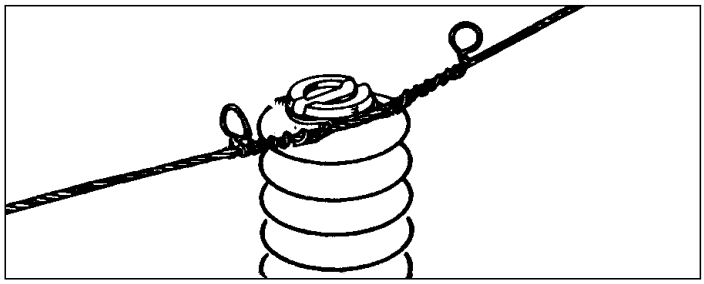

The angle tie completed.

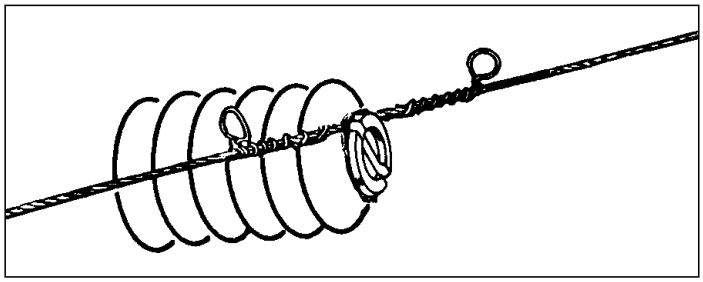

d15-26.tif

Single side tie on horizontal insulator.

ORIGINATOR	STANDARDS COORDINATOR	STANDARDS SUPERVISOR	UNIT DIRECTOR
Jim S. Horn	Charles L. Shaffer	John Skinner	Betty Robin

SEATTLE CITY LIGHT

CONSTRUCTION GUIDELINE

STANDARD NUMBER: **D16-2**
PAGE: 1 of 1
SUPERSEDING: September 23, 2002
EFFECTIVE DATE: December 21, 2006

GROUNDING ROD INSTALLATION

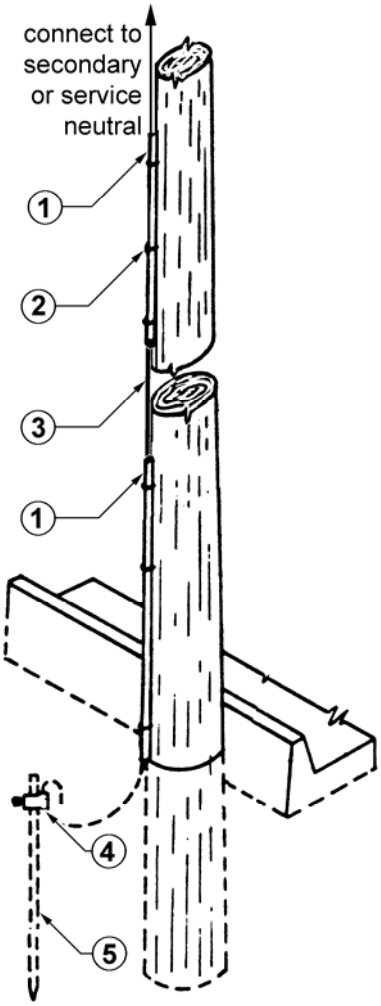

1. Material List

Item	Quantity	Description	Stock No.
1	as required	plastic moulding 1/2″ X 8′	582060E
2	as required	moulding staples 3/4″ X 2-3/4″	583200E
3	as required	#4 bare copper-clad steel conductor	012702
4	1	ground rod clamp 5/8″	564012E
5	1	ground rod 5/8″ X 8′	564238E

2. Procedure

2.1 Ground Wire Moulding: Moulding shall be installed over the ground wire to protect the lineworker, the wire and the public. See Detail 1.

Extend the plastic moulding at least two inches below the ground line.

2.2 Ground Wire: The ground wire shall be one continuous length. Insert ground wire from the bottom of the ground clamp and bend over the clamp before tightening. Connect to secondary or service neutral.

On the pole, place the ground wire in the quadrant between the pole face and the secondary or service neutral. See Detail 1.

2.3 Ground Rod: Drive the ground rod in firm undisturbed earth. See Detail 2.

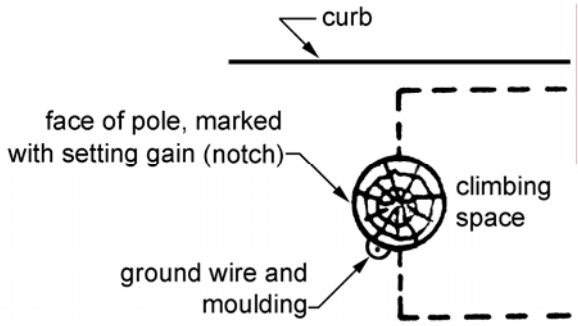

Detail 1

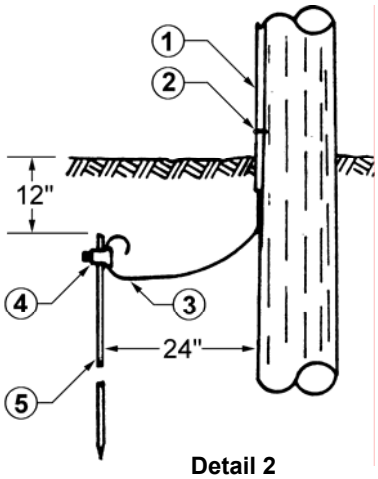

Detail 2

STANDARDS COORDINATOR	STANDARDS SUPERVISOR	UNIT DIRECTOR
Chris Detter	John Barnett	Hardev Juj

dummy tab front - U1 - U2

dummy tab back - U1 - U2

SEATTLE CITY LIGHT

CONSTRUCTION GUIDELINE

STANDARD NUMBER: **U1-2.6/NDW-20**

PAGE: 1 of 2

DATE: November 14, 1983

MAPPING SYMBOLS – OBSOLETE

Not to be used for new construction.

	1/4 SECTION	*PRIMARY DISTRIBUTION DIAGRAM*	*FACILITIES LOCATION MAP*
VAULTS, PADS & TRANSCLOSURES, MANHOLES	V-701 PAD-601 M-702	*OUTLINE DESIGNATES EQUIPMENT WITHIN ENCLOSURE* *V-703*	V-601 (444) ← *NUMBER* ← *SIZE* PAD-604 (TRANSCLOSURE) V-607 (577) V-702 (814) V-831 (687) PAD-600
HANDHOLE	H-633	SAME AS ABOVE	H-840 (1728) ← *SIZE (17" x 28")*
TERMINAL BOX	NOT SHOWN	NOT SHOWN	*(When shown: not required)*
POLE	147 ← *Number* 50 ← *Height*	147	147
PRIMARY TERMINAL POLE	*POLE NO. & HEIGHT* *FUSING* *TERMINATOR* 79 50 3-50 K	*Number* *3Ø FOR NO FUSE* TP 33 TP 66 3-50 K W/"C" LIM. *FUSE & LIMITER SIZE*	TP 34 *WITH CONDUIT* TP 34 *WITH D.B. CABLE*
SECONDARY TERMINAL POLE	79 50 *SECONDARY UG*	NOT SHOWN	CONDUIT — TP 79 DIRECT BURIED CABLE — TP 79
UNDERGROUND STREETLIGHT	*	NOT SHOWN	*
OVERHEAD SWITCH	SW 694 KPF 600 A	SW 694	NOT SHOWN
UNDERGROUND SWITCH	*SW U321* *N.O.*	*Designates VISIBLE BREAK* *SWITCH NO.* *SW U321* *50 K* VB DETAILED SCHEMATIC OF PAD MOUNT SWITCHGEAR 3-WAY, SWITCH W/LOADBREAK ELBOWS FOR VISIBLE BREAK *NC.* C *SW U321* A *NC.* B *NC.* *STRAIGHT SWITCH* *N.O.* *SW U321* *SWITCH W/VISIBLE BREAK ESCO YOKE* *N.O.* *SW U321* *FUSED SWITCH* *N.O.* *SW U321* *SWITCH POSITION* *FUSE #FA4H40 (Normally Open or Closed)*	NOT SHOWN
FAULT INDICATOR	NOT SHOWN	F	NOT SHOWN
JUNCTION BOX *200 Amp DB & LB* *600 Amp DB*	*AMOUNT & NO. OF POSITIONS INDICATED* I-J3 *DEADBREAK* I-J3 LB *LOADBREAK*	*DEADBREAK* *200 or 600 Amp* *LOADBREAK* *200 Amp* LB	NOT SHOWN

ORIGINATOR	STANDARDS COORDINATOR	STANDARDS SUPERVISOR	UNIT DIRECTOR
Michael A. Clark	James Skinner	J.A. Reynolds Jr.	D. DeTrice

OBSOLETE

Not to be used for new construction.

	1/4 SECTION	*PRIMARY DISTRIBUTION DIAGRAM*	*FACILITIES LOCATION MAP*
SUBMERSIBLE LIMITER	NOT SHOWN		NOT SHOWN
TRANSFORMER	W-3 SY 4783 100 *WIRE NO.* *CITY NO.* *KVA RATING*	50 50 50 *KVA RATING* *3Ø XFMR BANK* 50 *IN & OUT 2 BUSHING XFMR* 50 *SINGLE BUSHING XFMR*	W-3 SY 4783 100
PRIMARY CABLE	*3 PHASE* *1 PHASE* *CABLE SHALL BE LABLED*	*3 PHASE* *1 PHASE* *CABLE SIZE AND KV RATING SHALL BE CALLED OUT IN THE LEGEND*	*THIS SYMBOL IS ONLY USED WHEN CABLE IS DIRECT BURIED. A THICK LINE WEIGHT SHALL BE USED. WHEN CABLE IS IN CONDUIT REFER TO STANDARD FOR CONDUIT.*
SECONDARY CABLE	*CABLE SHALL BE LABLED*	NOT SHOWN	*THIS SYMBOL IS ONLY USED WHEN CABLE IS DIRECT BURIED. A THIN LINE WEIGHT SHALL BE USED. WHEN CABLE IS IN CONDUIT REFER TO STANDARD FOR CONDUIT.*
CONDUIT	NOT SHOWN	NOT SHOWN	*CONDUIT OCCUPANCY SHALL BE FLAGGED OR CALLED OUT IN LEGEND. DUCT CONFIGURATIONS ON MULTIPLE DUCT RUNS SHALL BE FLAGGED.*
200 AMP DEADBREAK ELBOW (no symbol)	NOT SHOWN	*THIS IS NOT A SYMBOL; ONLY AN INDICATION OF EQUIPMENT USE*	NOT SHOWN
200 AMP LOADBREAK ELBOW	NOT SHOWN	*INDICATES OPERABLE LOADBREAK* LB LB *LOADBREAK ELBOW*	NOT SHOWN
STRAIGHT SPLICE (600 A or 200 A)	NOT SHOWN		NOT SHOWN
200 A IN-LINE JUNCTION	NOT SHOWN		NOT SHOWN
ELBOW ON PARKING STAND	*3"1, 2/C* *V-891* *2-J3* LB	*DEADBREAK* *LOADBREAK* LB	NOT SHOWN
200 AMP T'S	NOT SHOWN		NOT SHOWN
600 AMP ELBOW	NOT SHOWN	*(WITH 200 A TAP)* *PHYSICAL CONFIGURATION SHALL BE SHOWN*	NOT SHOWN

OBSOLETE

CABLE PULLING CALCULATIONS

Maximum Pulling Tensions for Installing Electrical Wire and Cables (Underground)

Cables of moderate size and length are pulled into ducts and conduit by using basket-type or Kellems grips. Pull cables using basket-style or Kellems grips on the cable insulation jacket unless it is necessary to pull directly on the conductor (see Case 2, below).

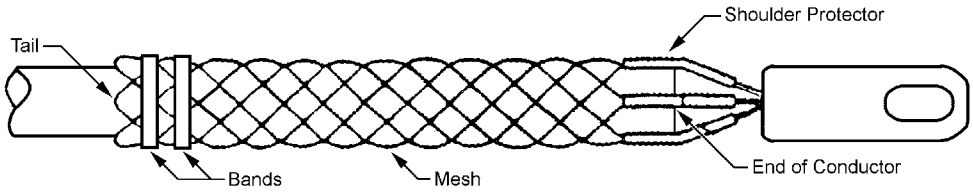

Kellems® K-Type Pulling Grip

One typically used, standard length Kellems K-Type pulling grip is designed to pull cables with diameters of 3.50 to 3.99 inches (Hubbell Catalog number 033-01-030). This grip is rated for 9,600 pounds work load and has an approximate breaking strength of 48,000 pounds. See the Table 5 on page 6 for other sizes of Kellems grips.

The following installation instructions accompany Kellems K-Type pulling grips (Hubbell):

1. Using black, vinyl electrical tape, tape the end of the conductor or cable bundle in two or three layers, tightly wrapped.
2. Assemble the grip so the cable end or cable bundle end is inserted up to the bend in the shoulder protectors (as shown above).
3. All slack should be ironed out of the mesh starting at the shoulder protectors and working back to the tail.
4. Two Punch-Lok® bands, each double wrapped, should be firmly attached approximately one inch and two inches from the grip's tail. Banding is required to insure maximum reliability and guard against accidental release.

Note: A Pengo Miller swivel is recommended for attachment to the grip's eye for release of torque during the pull.

Note: Do not run grips or swivel over bullwheels or winch drums while under tension.

Note: Do not use synthetic rope for pulling.

ORIGINATOR	STANDARDS COORDINATOR	STANDARDS SUPERVISOR	UNIT DIRECTOR
Jim S. Horn	Charles L. Shaffer	John C. Simmons	Harold Jay

The limits in the following examples must not be exceeded when pulling cable:

Case 1 – Pulling Grip, Head, or Eye Applied to Conductors

Aluminum: Maximum tension in pounds equals 0.006 times conductor size expressed in circular mils.

Copper: Maximum tension in pounds equals 0.008 times conductor size expressed in circular mils.

TABLE 1

Wire Size

AWG	Circular mils
6	26,250
2	66,370
1	83,690
2/0	105,530
4/0	211,600

Case 2 – Pulling Grip Applied to Insulation Jacket

Maximum tension shall not exceed 1,000 pounds. Case 1 limits shall not be exceeded.

Case 3 – Pulling Around a Bend

Maximum tension at a bend shall not exceed 500 times bend radius in feet. Cases 1 and 2 limits apply.

Case 4 – Pulling More Than One Conductor at a Time

Maximum tension shall not exceed the allowable sum of the individual tensions calculated above. Note that the maximum tension in this case may be much less than the individual sums, especially when pulling around a bend. Basket-type or Kellems grip tension is applied to the jacket, not the conductor.

FORMULAS FOR TENSION CALCULATIONS

Straight Sections – $T = L w f$

Where T = Pulling end tension

L = Section length

w = Cable weight per unit of length (see Table 4 on page 4)

f = Coefficient of friction 0.5 – Steel, clay

0.4 – PVC, transite

Curved Sections – $T_2 = T_1 e^{fa}$

Where T_1 = Feeding end tension

T_2 = Pulling end tension

e = 2.718

f = Coefficient of friction

a = Angle of bend, in radians (one radian = 57.3 degrees)

TABLE 2

CONDUCTOR APPLIED TENSION
Maximum Pulling Tensions, Grip, Head, or Eye

Cable Description	Maximum Tension	
	Pounds	Kilograms
3-1/C, 750 kcmil, 28kV Cu. and 1-4/0 Cu. Neut	19,692	8,932
3-1/C, 500 kcmil, 28kV Cu. and 1-4/0 Cu. Neut	13,692	6,210
3-2/C, 350 kcmil, 28 kV	6,300	2,863
3-2/C, #1 Al., 28 kV	1,500	684
2-2/C, #1 Al., 28 kV	1,000	456
1-2/C, #1 Al., 28 kV	500	228
500 kcmil, Quadruplex, 600V Al.	11,100	5,045
500 kcmil, Triplex, 600V Al.	8,100	3,674
350 kcmil, Quadruplex, 600V Al.	6,569	3,433
350 kcmil, Triplex, 600V Al.	5,469	2,480
#4/0, Quadruplex, 600V Al.	4,442	2,014
#4/0, Triplex, 600V Al.	3,172	1,439
3-#1, 600V Al.	1,500	684
#6, Duplex, 600V Al.	315	142

TABLE 3

VALUES FOR e^{fa}
Coefficients of Friction Are for Non-Lubricated Cables

a (degrees)	15	30	45	60	75	90	105	120
e^{fa} (f = 0.5)	1.14	1.30	1.48	1.69	1.92	2.19	2.50	2.85
e^{fa} (f = 0.4)	1.11	1.25	1.37	1.52	1.69	1.87	2.08	2.31

Note that no calculations have included any effects of sloping runs. Generally, it is best to pull downhill and feed the end closest to any bends.

Cable must not stop part way through. Once a pull has begun, it must be completed.

Case 4 Example

A 3-conductor, 500 kcmil, copper, RINJ cable weighing 6.4 pounds per foot is to be pulled in the duct shown below. Find the tension pulling from A to D and from D to A. Must the cable be pulled with tension applied to the conductors, or will a basket or Kellems grip on the insulation work?

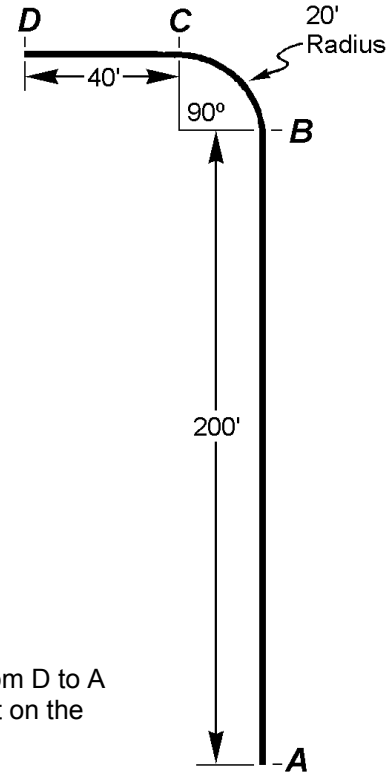

PULLING FROM A to D

Tension A to B	200 x 0.5 x 6.4	=	640 lbs
Tension A to C			640 x 2.20 = 1410 lbs
Tension C to D	40 x 0.5 x 6.4	=	128 lbs
Total Tension A to D			128 + 1410 = 1538 lbs

PULLING FROM D to A

Tension D to C	40 x 0.5 x 6.4	=	128 lbs
Tension D to B			128 x 2.20 = 282 lbs
Tension B to A	200 x 0.5 x 6.4	=	640 lbs
Total Tension D to A			640 + 282 = 922 lbs

Pulling on the conductors allows a maximum tension of:

0.008 x 500,000 x 3 = 12,000 lbs.

Pulling on the insulation with Kellems grips allows a maximum tension of 1000 lbs.

The maximum tension allowed at the bend is: 20 x 500 = 10,000 lbs.

Pulling from A to D requires that pulling be done with the conductors. Pulling from D to A allows a basket or Kellems grip on the insulation. The radius bend has no effect on the tension limits.

TABLE 4

See also Construction Guideline E6-1/NGE-70

CABLE WEIGHTS (w)		
Conductor	**Weight (lbs. per foot)**	**Weight (Kg per meter)**
500 kcmil Quad 600V Al.	2.233	3.323
500 kcmil Tx. 600V Al.	1.700	2.530
350 kcmil Quad 600V Al.	1.588	2.363
350 kcmil Tx. 600V Al.	1.266	1.884
#4/0 Quad 600V Al.	0.997	1.484
#4/0 Tx. 600V Al.	0.695	1.034

Case 5 – Pulling Up a Vertical Riser

The pulling tension is calculated the same as for a horizontal run except the total weight of the vertical portion of the cable is **ADDED** to the calculated tensions to determine the actual tension required to pull the cable.

Case 6 – Pulling Down a Vertical Riser

This pulling tension is calculated the same as above but the weight of the vertical portion to the cable is **SUBTRACTED** from the calculated tensions. If the run is long or the cable weight is high, the actual tension will be negative. This means a hold-back or brake will be required for permanent support for the cable.

Case 7 – Supports for Vertical Risers (Non-Armored)

All vertical cable runs require a permanent support. Short lengths (i.e., pole risers) may be supported with Kellems grips. Use the following process to calculate the maximum length (see example).

1. Select grip by wire size and note its breaking strength (See Table 5). Divide by 10 (Safety Factor). Divide this by the weight per foot of the cable times the length to find the **maximum** length the grip will support.
2. Use the conductor size in circular mils times $\pi/4$ times 24,000 (breaking strength of copper) and divide by a safety factor of 7 to determine the allowable supporting tension. (Multiply by three for three conductors.) Divide this result by the weight per foot of cable to find the **MAXIMUM** length of this cable that can be supported. Note the maximum allowable tension is 1000 lbs. for any cable. Divide this by the lbs/ft of cable weight to find this maximum. Use the smaller of the above 3 to find the safe maximum support length. **Note:** On all cable grip supports use two Punch Lok bands to secure the bottom of the grip and prevent slipping.

Case 7 Example

Cable:	#1 XLP 3cc cu 15 kV	3/0 XLP 3cc Cu 15 kV
Diameter over Jacket	2.01 to 2.25 inches	2.31 to 2.45 inches
Weight:	2.25 lbs/ft	3.37 lbs/ft
Grip No. (Kellems):	022-07-005	022-07-006
Breaking Lbs:	8050#	8050#
Grip Limit:	$\frac{8050}{(2.25)\ (10)} = 358$ feet	$\frac{8050}{(3.37)\ (10)} = 238$ feet
Cable Limit:	$\frac{(\pi/4)\ (83{,}690)\ (24{,}000)\ (3)}{(2.25)\ (7)\ (10^6)} = 300$ft	$\frac{(\pi/4)\ (167{,}800)\ (24{,}000)\ (3)}{(3.37)\ (7)\ (10^6)} = 402$ft
Maximum Cable Tension 1000# (see Case 2):	1000/2.25 = 444ft	1000/3.37 = 297ft
Maximum Length:	300 feet	238 feet

Case 8 – Supports for Armored Cable Risers

Armored cable is supported by its armor wires using an O.Z. fitting that is threaded on to the upper end of the vertical conduit run (No. FT5040, Stock No. 731142). This conduit **MUST** be rigid galvanized steel, encased in concrete, to provide support.

Case 8 Example

Cable:	2/0, XLP, 3cc, Cu, 15 kV, Armored
Armor:	40 Strands, 165 mils diameter
Weight:	6.95 lbs/ft
Armor Strength:	50,000 lbs/square inch

$$\text{Allowable Length} = \frac{(\pi/4)\,(\text{Armor Diameter})^2\,(\text{Number of Strands})\,(50{,}000)}{(7)\,(6.95)}$$

$$= \frac{(\pi/4)(0.165)^2\,(40)(50{,}000)}{(7)\,(6.95)} = 879 \text{ feet MAXIMUM}$$

References:
Okonite Company: Bulletin #EHB-98, Page 40-46
Okonite Company: “Installation Practices foe Cable Raceway Systems,” 1998
Okonite Company: “Cable Installation Design Limits”
IEEE Guide for Installation Methods for Generating Station Cables, IEEE Std 1185-1994
Construction Guideline E6-1/NGE-70

TABLE 5

Kellems® K-Type Pulling Grip, Standard Length

Hubbell Cat. No.	Cable Diameter Range, Inches	Work Load, Lbs.*	Approx. Breaking Strength, Lbs.
033-01-011	0.50 – 0.61	1,120	5,600
033-01-012	0.62 – 0.74	1,360	6,800
033-01-024	0.75 – 0.99	1,920	9,600
033-01-025	1.00 – 1.49	3,280	16,400
033-01-026	1.50 – 1.99	3,280	16,400
033-01-027	2.00 – 2.49	5,440	27,200
033-01-019	2.50 – 2.99	6,600	33,000
033-01-029	3.00 – 3.49	8,200	41,000
033-01-030	3.50 – 3.99	9,600	48,000
033-01-031	4.00 – 4.49	9,600	48,000
033-01-039	4.50 – 4.99	9,600	48,000
033-01-047	5.00 – 5.99	9,600	48,000
033-01-045	6.00 – 6.99	9,600	48,000

* Safety factor of 5 is per Kellems technical information.

PULLING CABLE AROUND BLOCKS

Maximum allowable cable pulling tension for one Hilti carbon steel "Kwik Bolt II" anchor. Tabulated values below include a 4:1 safety factor for anchor failure.

5/8" BOLT DIAMETER

Angle in Degrees	2000 psi Concrete Embedment Depth 2.75"	4"	7"		3000 psi Concrete Embedment Depth 2.75"	4"	7"
0	1540	1920	1920		1540	1920	1920
15	1510	1910	1930		1530	1920	1930
30	1460	1890	1960		1510	1940	1970
45	1410	1880	2010		1490	1960	2040
60	1370	1880	2100		1480	2020	2160
75	1370	1930	2240		1520	2120	2330
90	1420	2040	2460		1600	2290	2570
105	1540	2240	2790		1750	2560	2950
120	1770	2610	3330		2040	3020	3550
135	2210	3290	4280		2560	3850	4600

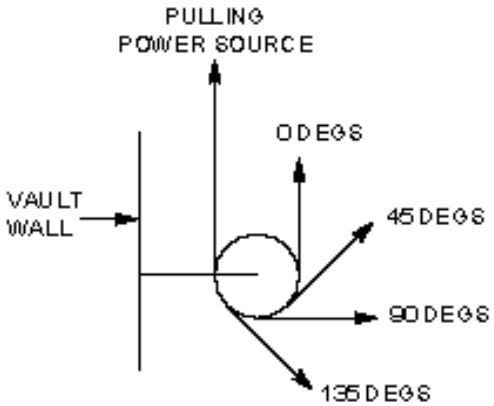

3/4" BOLT DIAMETER

Angle in Degrees	2000 psi Concrete Embedment Depth 3.25"	4.75"	8"		3000 psi Concrete Embedment Depth 3.25"	4.75"	8"
0	2070	2560	2560		2070	2560	2560
15	2030	2540	2570		2050	2570	2580
30	1930	2480	2590		2000	2600	2640
45	1830	2430	2650		1950	2670	2760
60	1750	2400	2740		1920	2780	2930
75	1730	2430	2900		1940	2950	3180
90	1780	2540	3150		2020	3210	3550
105	1920	2780	3550		2210	3640	4110
120	2190	3210	4210		2550	4320	4980
135	2730	4030	5380		3200	5540	6840

1" BOLT DIAMETER

Angle in Degrees	2000 psi Concrete Embedment Depth 4.5"	6"	9"		3000 psi Concrete Embedment Depth 4.5"	6"	9"
0	3540	4600	4600		3800	4600	4600
15	3460	4540	4600		3750	4590	4620
30	3290	4390	4620		3640	4560	4690
45	3110	4230	4680		3520	4550	4830
60	2980	4120	4800		3440	4590	5040
75	2940	4130	5020		3440	4730	5380
90	3010	4280	5400		3570	5030	5890
105	3240	4640	6030		3880	5560	6690
120	3710	5340	7100		4470	6480	7980
135	4620	6680	9040		5590	8190	10250

ORIGINATOR	STANDARDS COORDINATOR	STANDARDS SUPERVISOR	UNIT DIRECTOR
Keith "BHAG HOG" Rosand	Sam S. Horn	John E. Skimmer	Betty Robin

PULLING CABLE AROUND BLOCKS

Maximum allowable cable pulling tension for one Hilti carbon steel "Kwik Bolt II" anchor. Tabulated values below include a 4:1 safety factor for anchor failure.

5/8" BOLT DIAMETER

Angle in Degrees	2000 psi Concrete Embedment Depth 2.75"	4"	7"		3000 psi Concrete Embedment Depth 2.75"	4"	7"
0	800	1200	1600		940	1430	1740
15	810	1220	1620		950	1440	1750
30	850	1270	1670		990	1500	1810
45	920	1360	1770		1060	1600	1900
60	1020	1500	1920		1180	1750	2050
75	1180	1720	2140		1350	1970	2270
90	1420	2040	2460		1600	2290	2570

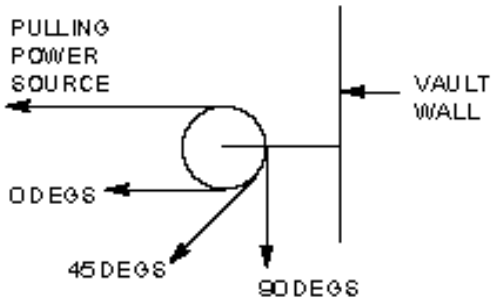

3/4" BOLT DIAMETER

Angle in Degrees	2000 psi Concrete Embedment Depth 3.25"	4.75"	8"		3000 psi Concrete Embedment Depth 3.25"	4.75"	8"
0	990	1470	2000		1160	2070	2470
15	1000	1490	2020		1180	2090	2490
30	1050	1550	2100		1230	2160	2560
45	1130	1670	2230		1320	2290	2680
60	1270	1850	2430		1470	2500	2870
75	1470	2130	2730		1690	2790	3150
90	1780	2540	3150		2020	3210	3550

1" BOLT DIAMETER

Angle in Degrees	2000 psi Concrete Embedment Depth 4.5"	6"	9"		3000 psi Concrete Embedment Depth 4.5"	6"	9"
0	1670	2420	3340		2030	3000	3840
15	1690	2450	3380		2060	3040	3880
30	1770	2560	3510		2150	3170	4010
45	1910	2760	3740		2320	3390	4250
60	2140	3080	4100		2580	3740	4610
75	2490	3560	4630		2980	4260	5130
90	3010	4280	5400		3570	5030	5890

GUIDE FOR HIGH DC VOLTAGE FIELD TESTING OF INSULATED POWER CABLE

1. PREFACE

Although factory tests normally assure initial quality and condition, insulated cables are subject, during shipment, installation, and operation, to influences which shorten the useful life of the insulation and other components of the cable. As a result, there is a need for some method of testing or inspection after installation and during its operating life to determine its suitability for continued services and/or initiate suitable maintenance procedures.

2. PURPOSE OF GUIDE

2.1 To provide uniform procedures for performing high DC voltage acceptance tests on power cables (including accessories) in the field.

2.2 Provide guidelines for evaluation of the test results.

2.3 Define terms which have specific meaning in the guide.

3. SCOPE

3.1 This guide presents suggested procedures and test voltage values for acceptance and maintenance testing of power cable systems with high DC voltages.

3.2 The guide applies to all types of insulated cable systems above 2,000 volts and is intended primarily for the transmission or distribution of power.

3.3 It is recognized that these procedures and tests may be applied to cables outside this scope and information of some value may be obtained from the test.

4. DEFINITIONS AND TERMINOLOGY

4.1 BIL

Basic Impulse Insulation Level - Impulse voltage which electrical equipment is required to withstand without failure or disruptive discharge, when tested under specified conditions of temperature and humidity. Basic impulse levels are designated in terms of the crest voltage of 1.2 x 50 microseconds full wave impulse voltage test.

4.2 Current

Absorption Current - Current resulting form charge absorbed in the dielectric as a result of polarization.

Capacitance Current - Current flow which charges the capacitor formed by the geometric capacitance of the cable under test.

Conduction (Leakage) Current of the Cable Insulation - Current flow resulting from conduction through the insulating medium or over surfaces (such as terminations). Corona discharge from energized elements will be indicated as conduction current, though technically it is not a conduction component.

Direct Current (DC) - Unidirectional current, as used in this guide, denotes a practically nonpulsating current.

4.3 **Voltage**

Rated Voltage - The rated voltage is expressed in terms of phase-to-phase voltage of a three-phase system and√3 times the voltage to ground for a single-phase system.

High DC Voltage - A DC voltage above 5,000 volts supplied by test equipment.

4.4 **Field**

The term "field" or "in the field" refers generally to apparatus installed in operating position. However, it may include material not yet installed or material that has been removed from its operating environment.

4.5 **Cable Accessories**

Those components of a cable system which cannot be readily disconnected from the cable and will be subjected to the test voltage.

4.6 **Tests**

Proof Test - A test of the insulation of a cable system made to determine if the electrical strength of the insulation is above a minimum value.

Withstand Test - A test made by applying a specified potential to a circuit for a specified time.

Acceptance Test - A test made after installation but before the cable is energized. This test is intended to detect shipping or installation damage and defects in workmanship on splicing and terminations.

Maintenance Test - A test to detect deterioration of the system.

5. GENERAL CONSIDERATIONS

5.1 **Environmental Influences**

Temperature - The dielectric strength of cable insulation is reduced at higher temperatures. Temperature gradients in the cable insulation, caused by heat dissipation from the conductor, can result in unusual potential distributions at high DC voltage. (Wait until the cable cools down. This would normally be taken care of by the time the cable was disconnected.)

Atmospheric Conditions - High humidity and conditions favoring condensation on exposed surfaces can affect test results to a marked degree. Contaminated terminations can greatly increase conduction.

Relative air density has little effect on cable testing, but it will affect the measurement of test voltage gaps or similar means.

Wind can cause erroneous current readings as referred to in paragraph 7.2.5.

Extraneous Electrical Fields - It is possible that, due to the stress and ionization of air between the circuit on test and nearby energized circuits, flashover may occur. To prevent this, precautions may include insertion of grounded shielding to protect adjacent circuits in service.

5.2 **Test Equipment**

High DC Voltage Generator - The test voltage source should have the following features:

a. The maximum (negative polarity) test voltage required plus some margin.

b. A means of increasing voltage gradually or in small steps.

c. Have sufficient volt-ampere output capacity to provide satisfactory voltage regulation.

d. Have output sufficiently filtered to provide an acceptable pure DC voltage.

5.2 e. Provide voltage and current indications that can be read precisely. Resolution of tenths of microamperes on the lowest current range is desirable.

5.3 **Safety of Personnel**

High potential testing of cables embodies all of the normal hazards associated with working energized circuits. There are two facets involving additional hazards. Cable circuits normally will have one or more ends remote from the test area. These ends must be cleared and guarded for personnel safety. A circuit voltage indicator suitable for safe applications to an energized circuit is recommended. This is to assure that circuits are de-energized before starting tests. Cables have much higher capacitance and dielectric absorption than most other types of electrical equipment. Particular attention and special techniques are required in discharging cables after testing to eliminate personnel hazards.

Dielectric desorption following application and subsequent discharge of a high DC voltage can result in a charge buildup in an underground cable. For this reason, grounding procedures are recommended in paragraph 6.2.7.

6. TEST METHOD

6.1 **Precautions**

All components require de-energizing before testing. Checking with a reliable voltage indicator is recommended. While the indicator is in contact with each component, a ground connection should be applied to the component to remain attached at all times except when test voltage is being applied. This applies to all un-energized metallic parts in the vicinity.

All ends of components being tested require guarding from accidental contact by such means as barriers, enclosures, or watchman at all such points. The ends require separation from all elements not to be subjected to test, and by distances not less than 1" per 10 kV of test potential.

With higher voltage cables, rated 115 kV and above, flashover at terminations or ends may generate abnormally high-voltage surges, so it is desirable to install suitable gaps at each end with a 50 ohm non-inductive resistor in series with the cable electrode to provide relief from such overvoltages. This resistor must be capable of dissipating the energy stored in the charged cable and must not flash over. Gap dimensions may be determined from IEEE Std 4 and should be set to spark over at 125% of the maximum test voltage to be used. Such a gap, even at the test set end, may be necessary to protect the test set against transient overvoltages.

It may be desirable to cover bare metal extremities of cable or terminations with plastic or glass containers to contain the space charge, reducing or eliminating corona.

6.2 **Procedures**

6.2.1 Prepare cable for testing in accordance with paragraph 6.1. Clean insulator surfaces with a dry cloth and if necessary apply silicone grease to minimize leakage currents. If necessary, wrap exposed conductor surfaces with several layers of polyethylene film to minimize corona (see paragraph 7.2.6).

6.2.2 Check the operation of the test set in accordance with manufacturer's recommendations. The current indication can be checked by connecting a short piece of small wire to the test lead and raising the potential until corona is heard from the ends of the wire; a microammeter of 0-10 or 0-50 microamps should indicate current. If leakage is apparent in the test leads, one should take steps to eliminate the leakage or note the amount to be deducted.

6.2.3 Connect the high-voltage test lead to the first conductor or conductors to be tested. Remove the ground lead from this conductor.

6.2.4 Voltage may be increased continuously or in steps to the maximum test value. If in steps, use five or more steps with duration at each step long enough for the current to attain reasonable stabilization (one minute suggested), or to show unreadable low-current values. Current readings at each voltage step should be taken at the end of the step duration. Apply voltage slowly enough in accordance with the test set manufacturer's recommendation to prevent overloading the power supply.

6.2.5 Maximum test voltage should be maintained for at least five minutes. Current magnitudes should be recorded one minute and five minutes after the maximum test voltage has been reached.

6.2.6 The test voltage to be used relates to the voltage rating of the rated voltage of the cable rather than the voltage of the system on which it is used. The recommended maximum test voltages for all types of insulation including installation or maintenance tests shall be:

System Description	System Voltage (RMS)	Cable Rating (RMS)	Cable BIL (Crest)	Maximum Applied Test Voltage (DC)
Other	-	2.5 kV	na	4.3 kV
Other	-	5 kV	60 kV	8.7 kV
Downtown core network, including Mass Substation circuits	13.8 kV - 3-wire, delta	15 kV	110 kV	16 kV
Kerite type cable	26.4 kV, 4-wire, grounded wye	27 kV	na	47 kV
University District network	26.4 kV - 3-wire, delta	28 kV	150 kV	32 kV
Looped radial	26.4 kV, 4-wire, grounded wye	28 kV	150 kV	47 kV
First Hill network	26.4 kV, 4-wire, grounded wye	28 kV	150 kV	32 kV
Other	-	35 kV	200 kV	60 kV

6.2.7 At the completion of the test period, potential can be reduced by returning the control of the high DC voltage generator to zero and permitting the cable to discharge through the cable system and the test set. For cable lengths exceeding about 1,000 feet, the time required for this discharge may be burdensome. To expedite the process, a resistor having not less than 10,000 ohms resistance per kV of test voltage may be placed between the conductor and ground. The resistor must be capable of withstanding the test voltage without flashover and of handling the discharge energy. It can conveniently be built or supported on the end of an insulated "hook" stick, the lower end of the resistor being grounded with a flexible conductor.

After the voltage is reduced to 10% or less of the original value, the conductor should be solidly grounded and should remain grounded until ready for service or further testing.

7. EVALUATION OF RESULTS

7.1 Current Time Relationship

7.1.1 The test current will momentarily increase for each voltage increment due to the charging of the capacitance, and dielectric absorption characteristics of the cable. Both of these factors decay, the first in just a few seconds, the latter more slowly, leaving ultimately only the leakage current plus any corona current.

7.1.2 In normal circumstances a current decrease with time will occur such that the one-minute current ratio will be from 1.2 to 2. However, erratic changes in corona current may mask actual leakage current, making the 1.0 factor a practical compromise.

If without any increase in applied voltage the current starts to increase, slowly at first, but at an increasing rate, this is an indication of progressively failing insulation. This process will likely continue to actual failure within a few minutes unless the potential is reduced. One criterion of satisfactory test in high DC voltage testing is the decrease of current with time at a fixed voltage application. While this may be partially obscured by corona current, voltage regulation and insufficient meter damping, the absence of a current steadily increasing with time

is generally a practical acceptable test criterion (also see paragraph 7.2.7). Rubber and oiled-paper insulations will usually exhibit this type of insulation failure. Polyethylene liquid gases very seldom fail in this fashion.

7.1.3 If at any time during the test a violent increase in current occurs, accompanied by tripping of the test set circuit breaker, failure or flashover has probably occurred in the cable, a splice, or at a termination. A failure can be confirmed by the inability to re-apply the test voltage. This behavior with insulation other than polyethylene is usually associated with the breakdown of an air path rather than the breakdown of solid insulation. If any residual solid insulation had remained, the "runaway" type of failure outlined in paragraph 7.1.2 above might have been the mode.

7.1.4 In event of the indication described in paragraph 7.1.2 or 7.1.3 above, it may be practicable in some cases to return the cable to service, if the distress potential reached was at least 2.8 times the rms phase-to-ground potential, and a second test up to this value proved satisfactory.

7.2 Resistance Values

7.2.1 Readings of voltage (E) and leakage current (I) observed during the high DC voltage test may be used to calculate the effective resistance (R) of the cable circuit by means of Ohms Law, R = E/I. A useful relation is:

$$\text{Thousands of Megohms} = \frac{\text{kilovolts}}{\text{microamperes}}$$

Calculating and plotting resistance vs. voltage, in conjunction with step-voltage test, is an aid in evaluating the insulation condition, and is frequently an even more sensitive indicator of approaching current avalanche failure than the dynamic behavior of the micro-ammeter itself. A substantial reduction in insulation resistance with increasing voltage as compared with the lower voltage increments is such an indication.

7.2.2 The comparison of the calculated resistance of the three conductors of a circuit is a useful indicator of an anomalous condition of the insulation of one or more of the cables. If there is more than a 3-to-1 difference between the resistance of the conductor insulation of a circuit over 2,000 feet long, or over 5-to-1 for a shorter circuit, some unusual insulation condition is indicated.

The insulation resistance characteristics vary so widely, and with varying termination conditions, that statement here of absolute values of resistance would be misleading. Comparison of resistance values with those obtained when the cable system was installed is useful.

7.2.3 All cable insulations have a negative temperature resistance coefficient, so increased temperature will always indicate lower insulation resistance. Oil-base rubber is the most extreme in this respect, polyethylene the least. Several types of compounds used for filling potheads have very low resistance compared to the oil-paper cable they terminate, and have a very high temperature resistance coefficient. For this reason, after installation these potheads should never be tested until they have been cooled to cable temperature. The elastomeric filling of some factory prefabricated terminators also has relatively low resistance and moderately high temperature resistance coefficient.

7.2.4 Humidity, condensation, and actual precipitation on the leakage surface of a termination can increase the apparent leakage current by several orders of magnitude. Humidity also increases the corona current, which indication is included in the total leakage current.

7.2.5 Wind prevents the accumulation of space charge at bare energized terminals. This results in an increase of corona. A plastic envelope or container tends to retain this space charge even in the presence of wind.

7.2.6 Additional leakage current of the order of ten to several hundred times the cable leakage current can be caused by equipment included in the test beyond the cable and its terminations. This current can be largely eliminated by wrapping all the conductor surfaces with several layers of polyethylene film and cleaning all insulating surfaces with a silicone greased cloth. When such equipment is included, for all practical purposes, the insulation being measured thus is that of the connected equipment, not that of the cable. Since most equipment to which cable is connected is not rated to withstand even normal cable direct test potentials, the potential which may be applied will be limited. In this case, the degree of effectiveness of the cable test is severely limited when such equipment is included in the test zone.

7.2 **Resistance Values, continued**

7.2.7 When equipment in addition to the cable and its terminations is being included in the test, the sensitivity required to note approaching "avalanche" conditions outlined in paragraph 2 above may not be attained due to the preponderance of the equipment leakage current. In such cases, "avalanche" or runaway conditions may be noted only when the failure mechanism is far advanced, and reduction of voltage may not be possible before actual breakdown occurs.

7.2.8 All of the above factors should be considered when comparing or evaluating the apparent insulation resistance of a cable circuit.

8. REFERENCES

Final Report, "Condition Assessment of 15 kV Distribution Cables, October 6 to 9, 2007 Field Tests in Seattle, Washington"; Powertech Labs, Inc.; April 2008

IEEE Std. 4-1995, "IEEE Standard Techniques for High-Voltage Testing"

E6-1.0/NGE-70, "Properties of Medium Voltage Cables"; *Construction Guideline*; SCL

APPENDIX

A. REASONS FOR TESTING

1. Cable with Extruded Dielectric

a. Acceptance Tests

A high DC voltage test made before placing a cable in service normally reveals imperfections, almost complete perforations of the insulation, improper materials or practices used in splicing, terminating, etc., but will not indicate the small imperfections that may exist from installation and handling (oversharp bending, etc.) or built-in defects such as gaps in semi-conducting coverings. The acceptance test will, in most cases, reveal defects that would otherwise cause failure within one or two years.

b. Maintenance Tests

Exposure to normal alternating voltage for a moderate period is required before the progressive insulation deterioration of imperfections can be revealed by high DC voltage testing.

The action of power frequency corona at an insulation defect weakens this protection of the insulation. The principle of high DC voltage testing as a maintenance practice is to apply high enough test voltage to cause test failure of insulation which is so weak (and deteriorating) as to risk failure in service before the next test period. Factors to be considered are:

(1) Deterioration rate of insulation in service,
(2) Interval between test periods, and
(3) Safe withstand voltage of sound cable insulation.

Deterioration rate is highly variable, and not susceptible to scientific analysis. Experience indicates that deterioration rates of defects and damaged insulation are highest for new or newly-installed cables, and a major proportion of this deterioration is detectable by test during the first three years of service. Frequent testing during the first three years will detect the bulk of advancing deterioration, permitting longer intervals between tests.

2. **Laminated Dielectric Cables**

a. **Acceptance Tests**

As with cable with extruded dielectric, an acceptance test before placing in service normally reveals dielectric defects, weakness, or errors, which would result in failure within the first year or so.

b. **Maintenance Tests**

Laminated dielectric cable, when pressured, is much less susceptible to progressive deterioration from corona action at imperfections. When the dielectric is not pressurized, migration of oil and subsequent dry-out of the insulation will permit degradation from corona action. A major cause of failure of these types of cable is failure of the enclosing sheath, and ingress of water. This condition is aggravated by cyclic loading of the cable. Actual failure does not occur immediately after a breach of the sheath. Insulation resistance decreases and dielectric losses increase progressively after the initial moisture encroachment. Actual failure may not occur for several months. The usefulness of maintenance tests on this cable type depends on the frequency of the testing.

It is apparent that rather frequent maintenance tests are required to attain useful reduction in service failures with this cable.

B. PROTECTION AGAINST POSSIBLE SEVERE VOLTAGE CONDITIONS DUE TO FLASHOVER

1. **Possible Severe Voltage Conditions**

If during a high-voltage test a flashover should occur, either in the cable itself or at the terminations, voltage surges of a polarity opposite to the test voltage are initiated. These travel along the cable and produce reflections at the terminals in accordance with traveling wave theory. Before any reflections occur, the traveling wave voltage tends to neutralize the cable test voltage and relieves the prevailing voltage stress. However, at an open circuited terminal, the surge voltage doubles with the same polarity and produces a polarity reversal at the terminal. This polarity reversal is subsequently imposed on the cable. While the maximum possible voltage magnitude is approximately equal to the test voltage and will not exceed equipment BIL, even for 100% tests, there is some uncertainty of its effects because of the polarity reversal. Some opinions indicate that underground plant can be damaged unduly by this means and that protection should be provided.

2. **Protection Requirements**

The effects of test flashover occurrences can be minimized by preventing reflections at the terminals. This can be accomplished by installing a protective device which will withstand a negative test voltage, if the flashover is subjected to a positive voltage of the same magnitude or significantly less (60 or 70%). Such a device can be connected to ground through a resistor equal to the cable surge impedance, thereby minimizing reflections at terminals.

For this purpose, a special gap is required. Some experiments have been conducted on a gap comprising of a five-foot ring with a sphere in the center. Such a gap exhibits a positive polarity breakdown much lower than for negative polarity. Before gap designs can be suggested, more development work is required.

TRANSFORMER SECONDARY LEAD SIZES FOR UNDERGROUND INSTALLATIONS

All cables are sized for 150% transformer load. For Network, see NTP-80.

1 Ø - 120/240 V TRANSFORMERS

Rating Bank kVA	Amps	Aluminum Cable				Copper Cable				Reference Standards
		Phase		Neutral		Phase		Neutral		
		No. & Size	Stock No.	No. & Size	Stock No.	No. & Size	Stock No.	No. & Size	Stock No.	
025	104	1 - 4/0	601011	1 - 4/0	601011	1 - 4/0	613735	1 - 4/0	613735	
050	208	1 - 4/0	601011	1 - 4/0	601011	1 - 4/0	613735	1 - 4/0	613735	U9-7.3,
075	312	1-500	601015	1-500	601015	1-500	613740	1-500	613740	U9-5
100	417	1-500	601015	1-500	601015	1-500	613740	1-500	613740	
167	696	2-500	601015	1-500	601015	1-750 or 2-500	613743 613740	1-500	613740	

3 Ø – 208Y/120 V TRANSFORMERS

Rating Bank kVA	Amps	Aluminum Cable				Copper Cable				Reference Standards
		Phase		Neutral		Phase		Neutral		
		No. & Size	Stock No.	No. & Size	Stock No.	No. & Size	Stock No.	No. & Size	Stock No.	
0075	0208	1 - 4/0	601011	1 - 4/0	601011	1 - 4/0	613735	1 - 4/0	613735	
0150	0417	1-500	601015	1-350	601014	1-500	613740	1-500	613738	U10-1.7,
0225	0625	1-750	601016	1-500	601015	2-350	613740	2-350	613740	U9-7.7
0300	0833	2-500	601015	2-350	601014	2-500	613740	1-500	613740	
0500	1388	3-500	601015	2-500	601015	2-750 or 3-500	613743 613740	2-500	613738	
0750	2082	4-500	601015	3-500	601015	3-750	613743	2-750	613743	U11-8
1000	2776	5-750	601016	3-750	601016	4-750	613743	3-500	613740	

3 Ø – 480Y/277 V TRANSFORMERS

Rating Bank kVA	Amps	Aluminum Cable				Copper Cable				Reference Standards
		Phase		Neutral		Phase		Neutral		
		No. & Size	Stock No.	No. & Size	Stock No.	No. & Size	Stock No.	No. & Size	Stock No.	
0150	0180	1 - 4/0	601011	1 - 4/0	601011	1 - 4/0	613735	1 - 4/0	613735	
0225	0271	1-500	601015	1-500	601015	1 - 4/0	613738	1-350	613738	U10-1.7,
0300	0361	1-500	601015	1-500	601015	1-500	613740	1-500	613740	U9-7.7
0500	0601	1-750	601016	1-500	601015	2-350	613740	2-350	613740	
0750	0902	2-500	601015	1-750	601016	2-500	613740	1-500	613740	
1000	1203	2-750	601016	2-350	601014	2-750	613743	1-750	613743	U11-8
1500	1804	3-750	601016	2-750	601016	3-500	613740	2-500	613740	
2000	2406	4-750	601016	3-750	601016	3-750	613743	2-750	613743	
2500	3007	5-750	601016	4-750	601016	4-750	613743	3-750	613743	

STANDARDS COORDINATOR	STANDARDS SUPERVISOR	UNIT DIRECTOR
John Shipek	John Barnett	John Nierenberg

INSPECTION AND REPAIR PROCEDURES FOR PRECAST VAULTS AND MANHOLES

Figure 1. Vault Repaired with Epoxy Injection

1. Scope

This Guideline covers the inspection and repairs of cracks and/or spalling in precast vaults, manholes, and other similar structures. It shall apply to all new precast concrete vaults, manholes, and handholes with a dimension (length, width, depth) of 4 feet or more that are installed for use by Seattle City Light.

2. Background

A main source of strength in precast concrete structures is provided by the rebar (reinforcing steel). The principal component of the reinforcing steel is iron which has a persistent tendency to return to its natural state, generally iron oxide, or rust. Whenever an excessive amount of heat or moisture is present, the rebar will rust at a rapid rate. The presence of admixtures, such as calcium chloride, and moisture increases the probability of rebar rusting.

When the rebar rusts, it begins to lose strength, but more importantly the rust occupies a much greater volume than the iron from which it came. The rust exerts expansion pressures exceeding the ability of even the strongest concrete to resist. The result is cracking and, if corrosion continues, concrete will spall off. Such spalling is frequently accompanied by leaching of rust to the concrete surface, leaving unsightly stains. Remedial action must be taken so that progressive deterioration does not ultimately threaten the structure's adequacy.

As stated above, structures that have high humidity and excessive heat are very likely to eventually start to crack or spall.

A spall is a fragment of concrete detached from the larger mass by a blow, by action of weather, or by pressure or expansion within the large mass. In the case of vaults, it is frequently caused by expansion that accompanies the corrosion of reinforcing steel.

3. Inspections

3.1 Precast Vaults and Manholes (except Vault/Manhole roof)

Cracks less than 0.012″ wide are not an immediate source of concern, unless there are multiple cracks in one area. Cracks 0.012″ wide or greater, or spalling 0.375″ deep or greater are of concern, especially in high moisture vaults or where excessive heat is present. These cracks and spalls shall be repaired. Any cracks or spalling that make the reinforcing steel visible shall be repaired immediately. If a crack is 1/8″ (0.125″) wide or more, SCL Civil Engineering should be called to determine if the entire structure or roof should be replaced, or to provide detailed procedures for major repair.

Generally, the precast manufacturer will look at the defect and provide an opinion regarding repair. Precast vaults and manholes shall have the minimum concrete cover over rebar as specified in Table 3.1. Where insufficient concrete cover is found, the supplier should be notified.

Table 3.1, Minimum Concrete Cover over Rebar

Type of Rebar	Minimum Depth of Cover, in.
Main reinforcing steel	1-1/2
Stirrups and Ties	1

It should be noted that any structure under one year old (covered by warranty) that has cracks or spalling, as described in SCL Material Standard 7201.00, should immediately be brought to the attention of the manufacturer and installing contractor.

Vaults being inspected should be tested by hammering the walls and roofs. A hollow sound will indicate loose or delaminated concrete.

3.1 Precast Vaults and Manholes (except Vault/Manhole roof), continued

Prior to replacing any defective concrete, the manufacturer should be notified in order to determine if he is liable for any portion of the repair.

3.2 Inspection – Vault/Manhole Roof

Any cracks greater than 0.012″ are a concern when they appear in vault roof, especially if the roof is in a heavy traffic area. The manufacturer and/or SCL Civil Engineering should be contacted for advice on replacement. Cracks 0.062″ wide or greater in a vault roof indicate a faulty cover and require the replacement of the entire roof.

4. Repair Procedure – Cracks

4.1 General

Cracks shall be repaired by injecting epoxy grout under pressure into the crack. The procedure for preparation and application of the epoxy injection shall be in accordance with the epoxy manufacturer's recommendations and as described below:

a. Cracks to be filled shall be cleaned of dust, silt, and any other material that would impair bond of the epoxy to the concrete. For small cracks, cleaning shall be done by vacuuming. Large cracks may be blown out with compressed air.

b. Suitable fixed injection ports shall be established along the cracks at intervals not less than the thickness of the concrete being injected. At the end of a crack, the first port shall be about half this distance from the end.

c. The surface of the crack between ports on both faces of the structure, if they are accessible, shall be sealed with tape or other temporary surface sealant which is capable of retaining the epoxy adhesive in the crack during pressure injection and until the epoxy has hardened. Sealing tape and/or temporary surface sealant should remain in place until the epoxy has hardened.

d. Epoxy adhesive shall be pumped into the cracks through the injection ports. The pump, hose, injection gun, and appurtenances shall be capable of injecting the epoxy at a sufficient rate and pressure to completely fill all designated cracks. The temperature of the concrete shall be not less than 45 deg F at the time the epoxy is injected.

e. Before starting injection work and at hourly intervals during injection work, a sample of mixed epoxy shall be taken from the injection gun. If these samples show any evidence of improper proportioning or mixing, injection work shall be suspended until the equipment or procedures are corrected.

4. Repair Procedure – Cracks

4.1 General, continued

f. The epoxy adhesive shall be forced in to the first port at one end of a crack until adhesive runs in substantial quantity from the next adjacent port. The first port shall then be sealed and injection started at the next port where the epoxy has just begun to show. Injection shall then continue from port to port in this manner until the crack is fully injected. For slanting or vertical cracks, pumping shall start at the lower end of the crack and progress upward. Where approximately vertical and horizontal cracks intersect, the vertical crack below the intersection shall be injected first. For horizontal structural elements, the crack shall be injected from bottom of the element, filling upward.

4.2 Injection Equipment

a. Automatic pressure injection systems shall contain positive displacement pumps with variable feed rate to ensure components are mixed at the correct ratio.

b. The recommended injection pressure for epoxy injection shall be 10 to 15 psi at the beginning of the injection at each injection location. The pressure may be gradually increased to 20 to 25 psi if the injection progresses too slowly. The maximum injection pressure shall not exceed 75 psi.

For best results, it is recommended that low injection pressure, in the range of 10 to 25 psi, and slower injection progressive speed be maintained at all times. This can be verified with the use of a pressure gauge located on the discharge side of the mixer.

c. Transparent reservoirs shall be used to verify that the ratio of the components mixed is in accordance with epoxy manufacturer's recommendations. Metering systems shall be used to ensure mixing accuracy is within 2%.

4.3 Material

a. Epoxy shall be a two-component, waterproof system specifically manufactured for use in filling cracks by means of pressure injection. All epoxy resin shall conform to the requirements of the American Society for Testing and Materials (ASTM) Standard Specification for Epoxy Resin Base Bonding Systems, ASTM C 881-02.

b. The following are approved epoxies and suppliers:

Epoxies	Manufacturer
Ceilcote 747R Repair Grout	Ceilcote, a division of International Protective Coatings
Sikadur 52 Injection Resin	Sika Corporation

Other materials may be submitted for approval.

5. Repair Procedure – Spalls

5.1 Preparation

a. Remove all loose material to sound concrete. The perimeter of the prepared area should have perpendicular edges with a minimum depth of 1/8″.

b. Concrete shall be chipped to a minimum clearance of one inch all around corroded reinforcing bars. The exposed bars shall be cleaned of corrosion.

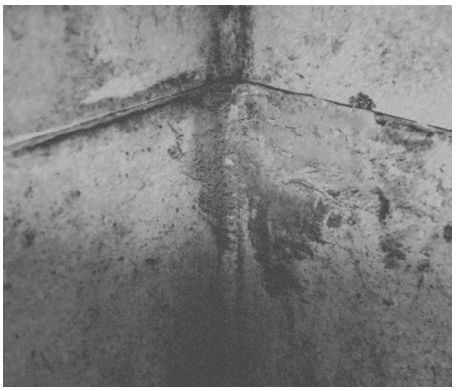

Figure 2. Mortar Patch for Spall Repair

c. Existing concrete surface at the repairing area shall be roughened to a minimum depth of 1/8″ prior to patching.

d. If the diameter of the rebar is reduced by 1/16″ or more, additional reinforcement shall be installed. Precast manufacturers should be contacted for installation details.

5.2 Patching

Overhead grout patches shall be applied in layer not to exceed 1/2″ in thickness.

5. Repair Procedure – Spalls, continued

5.3 Materials

All material shall be applied in accordance with grout manufacturer's recommendations.

Nonshrink Grout	Manufacturer
Masterpatch 95 Repair Mortar	BASF
Five-Star Nonshrink Grout	Five Star Products, Inc.
Sika Top 122 and 123 Repair Mortars	Sika Corporation

Other Nonshrink grouts may be submitted for approval.

6. Record of Repair

Each area where Epoxy injection repair was done by the supplier/installing contractor shall be stamped with the label "Epoxy Injected, Inspected by Supplier/Installing contractor Name".

7. References

224.IR-07; "Causes, Evaluation, and Repair of Cracks in Concrete Structures"; American Concrete Institute

C881; "Standard Specification for Epoxy-Resin-Base Bonding Systems for Concrete"; ASTM; 2002

Detter, Chris; SCL Standards Engineer, subject matter expert and originator for U2-6/NVH-20 (chris.detter@seattle.gov)

Ng, Sharon; SCL Senior Civil Engineer, subject matter expert for U2-6/NVH-20

ELECTRICAL CONDUIT AND FACILITIES IN PUBLIC RIGHTS-OF-WAY

Figure 1, Minimum Spacing and Clearances Between SCL Vaults and Manholes and Other Installations

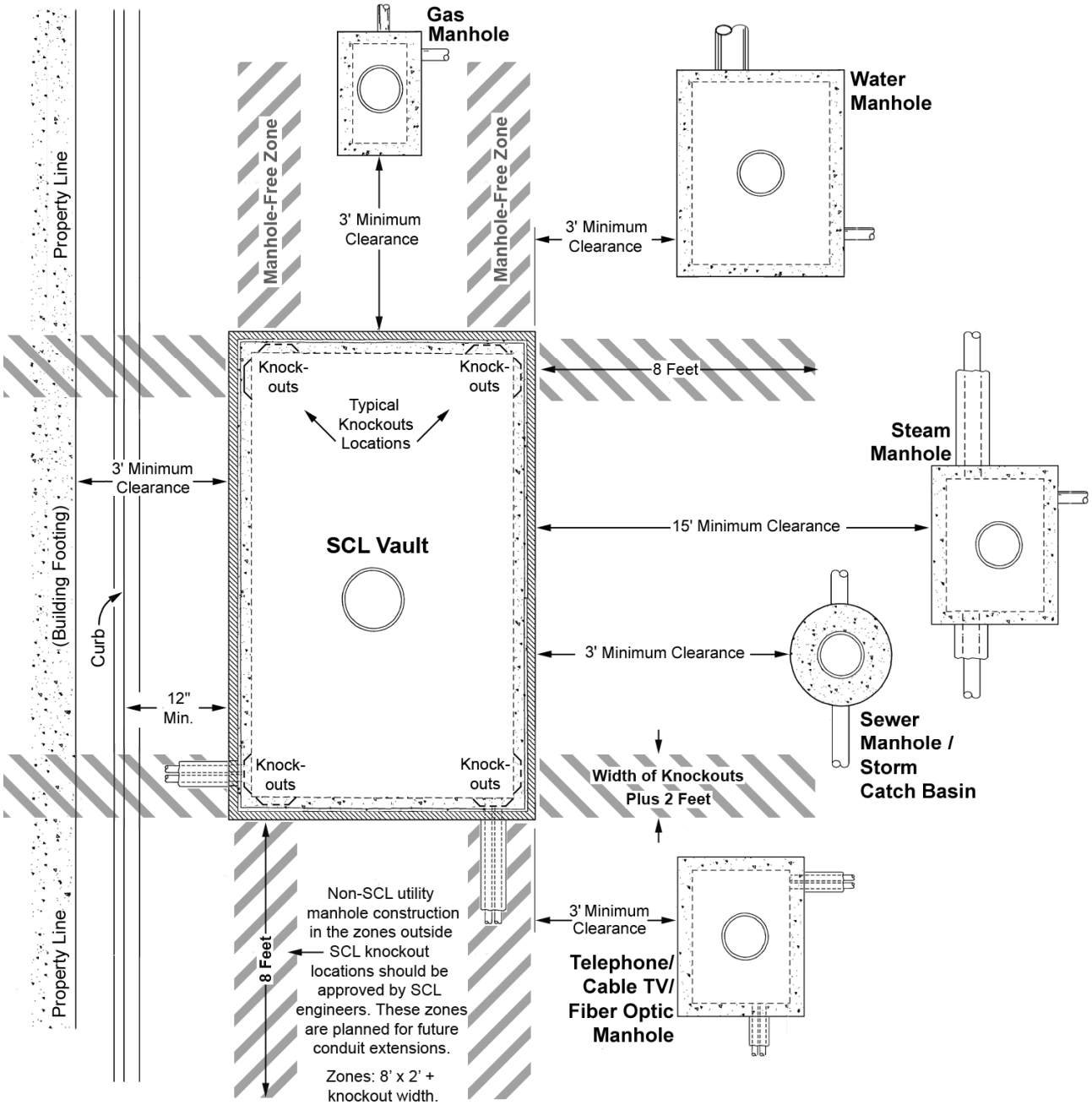

standards coordinator	standards manager	unit director
Brett Hanson	John Shipek	Pamela S. Johnson

Figure 2, Minimum Spacing and Clearances Between SCL Conduits and Other Installations

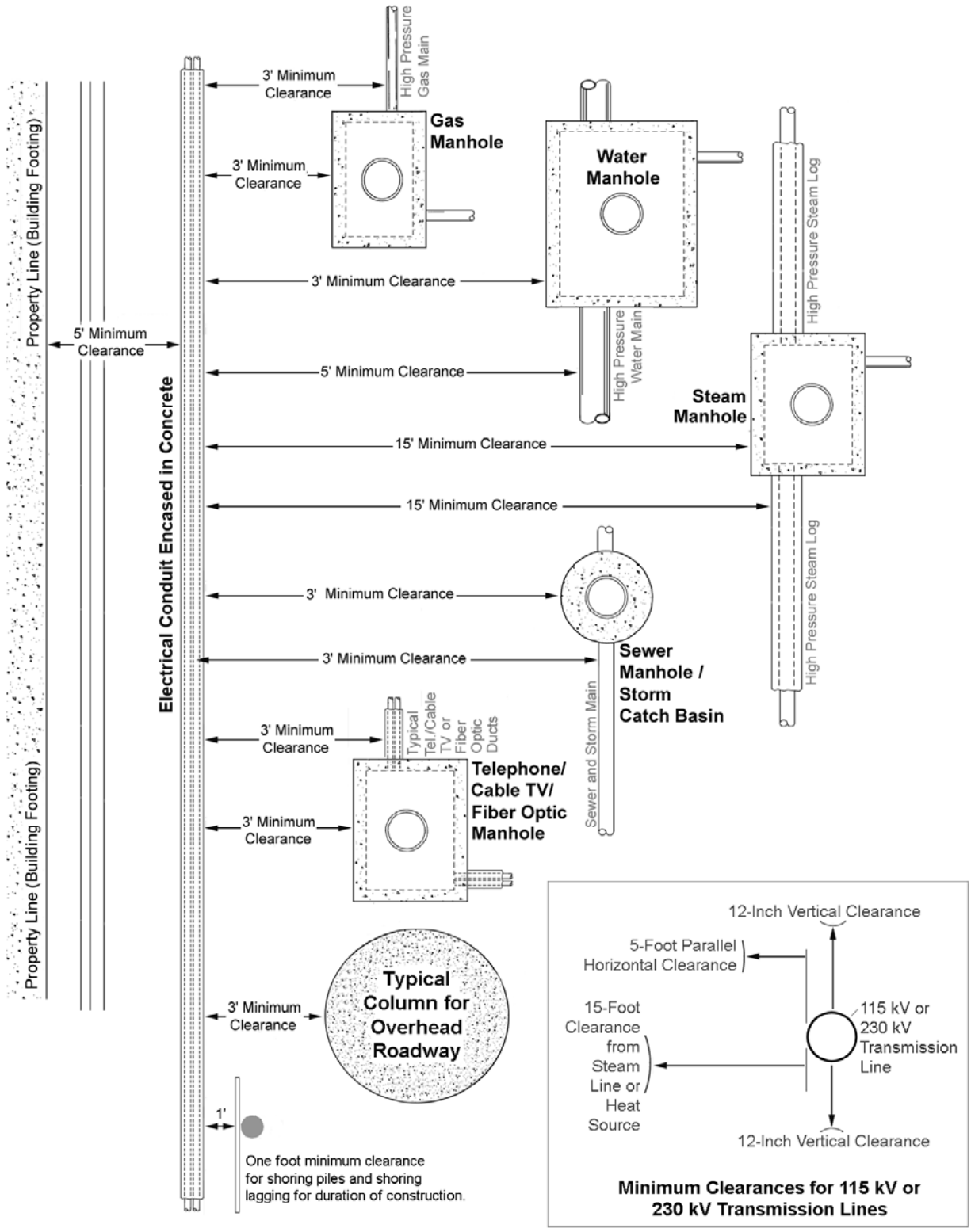

Figure 3, Minimum Spacing and Clearances Between SCL Vaults and Manholes and Other Utility Conduits, Mains, Ducts and Pipes

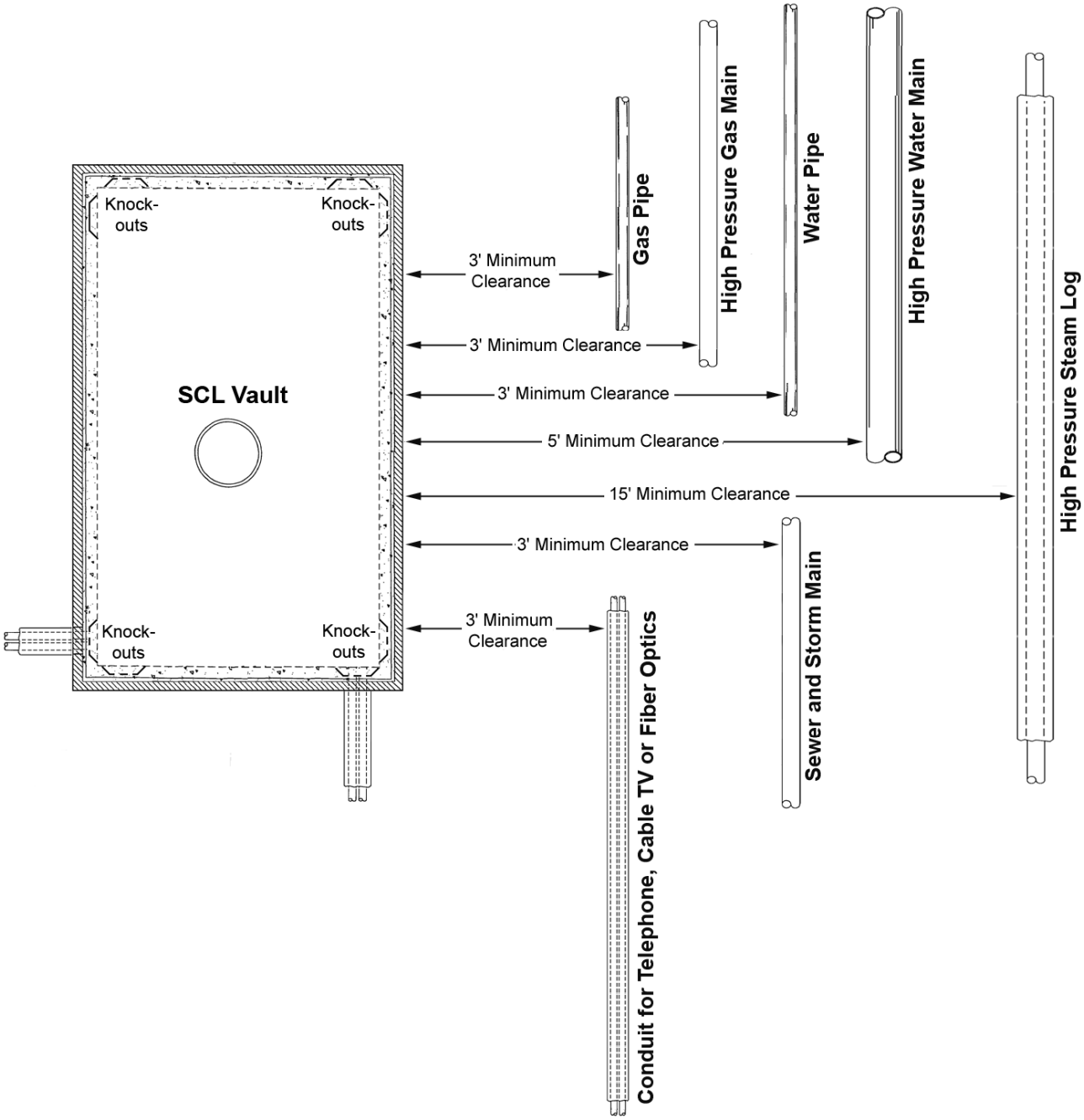

1. Minimum Separation for Utilities and Structures

Provide minimum separation for City Light cable, conduit, manholes and vaults from other utilities or structures as follows unless parties concur in writing on lesser separations.

The separation between electrical power conduit and utilities such as telephone, cable TV, and fiber optic cable shall be 3 feet, minimum, measured in any direction, and shall be offset as much as possible so as to be separated from City Light conduit horizontally and not directly above. The separation between electrical power conduit and structures such as roadway columns including footings shall be 3 feet, minimum, measured in any direction, unless parties concur on lesser separations.

City Light 115 or 230 kV transmission lines shall always require a minimum of 12 inches of vertical separation and 5 feet of parallel, horizontal separation from other facilities or in the case of steam lines or other heat sources, a minimum of 15 feet separation.

Overhead clearance above City Light underground vaults and manholes: To allow crane access to City Light vaults and manholes for lowering and raising equipment, the minimum vertical height above the underground facilities, of overhead structures and any encumbrances, such as roadway columns, shall be 25 feet.

During construction projects, installations of shoring, shoring piles and shoring lagging shall maintain a separation from City Light conduits, duct banks, vaults and manholes of no less than one foot for the duration of construction.

	Separation from SCL Facilities (None Directly Above Without Approval*):			
Non-SCL Utility or Structure	**Duct Banks**	**115 or 230 kV Lines**	**Vaults or Manholes**	**Adjacent to Knockouts Ψ**
Water Manhole, Horizontal	3 ft	5 ft	3 ft	8 ft
High Pressure Water Main, Vertical	12 in	12 in	none*	none*
High Pressure Water Main, Horizontal (Parallel to HP Main)	5 ft	5 ft	5 ft	5 ft
Other Water Pipe, Horizontal	3 ft	5 ft	3 ft	3 ft
Sewer/Storm Service Manhole, Horizontal	3 ft	5 ft	3 ft	8 ft
Sewer and Storm Water Main, Vertical	6 in	12 in	none*	none*
Sewer and Storm Water Main, Horizontal (Parallel)	3 ft	5 ft	3 ft	3 ft
SPU Storm Catch Basin, Horizontal	3 ft	5 ft	3 ft	5 ft
Natural Gas Manhole, Horizontal	3 ft	5 ft	3 ft	8 ft
High Pressure Gas Main, Vertical	6 in	12 in	none*	none*
High Pressure Gas Main, Horizontal (Parallel)	3 ft	5 ft	3 ft	3 ft
Other Gas Pipe, Horizontal	3 ft	5 ft	3 ft	3 ft
Steam Manhole or **Any Heat Source**	15 ft	15 ft	15 ft	15 ft
High Pressure Steam Log	15 ft	15 ft	15 ft	15 ft

* **No Installations Directly Above SCL Facilities Without SCL Engineering Approval! See below for direction on exceptions.**

Ψ No utility handholes or other underground structures to be installed in the area outside and adjacent to knockouts that are within a City Light vault in a zone extending outward from the vault for 8 feet and wide enough to include one foot on each side of the knockouts. This zone to be reserved for future extensions of City Light duct runs unless parties receive explicit permission from City Light Engineering.

1. Minimum Separation for Utilities and Structures, continued

Non-SCL Utility or Structure	Separation from SCL Facilities (None Directly Above Without Approval*): Duct Banks	115 or 230 kV Lines	Vaults or Manholes	Adjacent to Knockouts Ψ
Telephone, Cable TV or Fiber Optic Cable Manhole, Horz.	3 ft	5 ft	3 ft	8 ft
Telephone, Cable TV or Fiber Optic Cable, Vertical	6 in	12 in	none*	none*
Telephone, Cable TV or Fiber Optic Cable, Horizontal (Parallel)	3 ft	5 ft	3 ft	3 ft
Fire Hydrants, Horizontal	6 in	5 ft	6 in	8 ft
Street Curbing, Horizontal	12 in	5 ft	12 in	–
Building Footing, Horizontal	5 ft	5 ft	3 ft	–
Metro Buses and Strain Poles (OH Operation), Horizontal	5 ft	5 ft	5 ft	–
Concrete Support Column, Horizontal	3 ft	5 ft	3 ft	8 ft
Concrete Support Column Footings, Horizontal	3 ft	5 ft	3 ft	8 ft
Temporary Construction Shoring Piles, Horizontal	1 ft	1 ft	1 ft	1 ft

* **No Installations Directly Above Scl Facilities Without Scl Engineering Approval! See below for direction on exceptions.**

Ψ No utility handholes or other underground structures to be installed in the area outside and adjacent to knockouts that are within a City Light vault in a zone extending outward from the vault for 8 feet and wide enough to include one foot on each side of the knockouts. This zone to be reserved for future extensions of City Light duct runs unless parties receive explicit permission from City Light Engineering.

Refer to Section 9. for Planting Clearances.

2. Trench Design and Construction

All SCL transmission lines and all critical distribution lines, as determined by SCL, shall be designed using thermal resistivity soil studies.

The bottom of the trench shall be free of debris and fine graded by hand to remove sharp, embedded rocks and loose stones over 1/2 inch in size, or the trench shall be over-excavated and the over-excavation replaced with bedding material to cover protruding rocks and stones by at least 2 inches. The bottom shall be graded even.

Bedding shall be sand.

Spacers for conduit separation shall be plastic lock-type placed 5 feet apart horizontally in both straight and bending sections of duct banks. Two by four-inch (nominal) concrete or wood blocking, twice the area of the foot of the base spacer, shall be provided under base spacers. See Construction Standard 2-11, Section 9.

Over conduit, place bedding material or a 2 inch layer of unsaturated excavated material selected to exclude all sharp rocks and stones over 1/2 inch in size. Around all telephone and television cables, place bedding material or select excavation material. Backfill conforming to this may be placed directly over conduit and all cables.

The trench depth between 20 inches and 30 inches is reserved for lateral services.

Cover over conduit and cables shall be measured from finished grade or top of curb, whichever is lower. If no curb, then measure from edge of pavement.

City of Seattle: Location and depth of all conduit cuts and services shall conform to the *Standard Plan For Construction* or except as indicated on construction drawings. Minimum Cover: 3 feet between street intersections; 4 feet at street intersections; and maximum depth, 6 feet. See Page 6.

3. Duct Bank Depth

Normal minimum depth for SCL duct banks is 3 feet. Depth is measured from street grade to the top of the bank. For non-standard installations where it may not be possible to achieve Guideline depth for SCL duct banks, additional protection is required. The use of steel conduits and/or steel plating above the ducts may be used at the direction of SCL engineers in these situations. SCL engineering approval is always required for non-standard depth placement. With additional protection, SCL engineers have allowed a minimum depth of 24 inches for ducts containing less than 600 volts and 30 inches for ducts containing more than 600 volts. Where it is necessary to place ducts deeper (e.g. deeper than 6 feet), installations shall be reviewed by SCL engineers to assure cable ampacity is not compromised.

Figure 4, Primary and/or Secondary Conduit

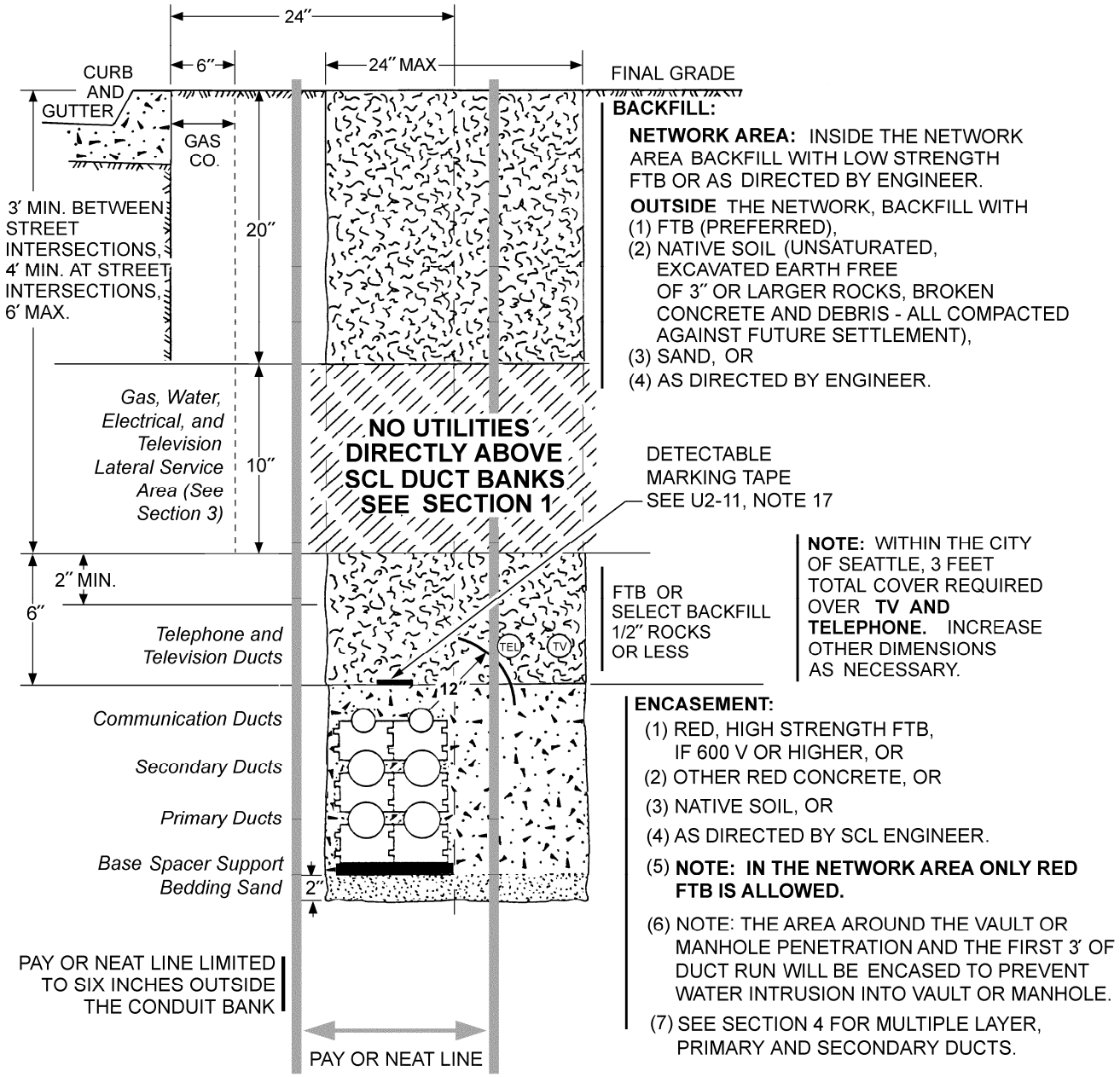

4. Multiple Layers of Conduit

CAUTION! On parallel runs a **minimum of 6-inch** separation is to be maintained horizontally from top to bottom of trench. Utilities **shall not** be installed directly over each other (exceptions with SCL Engineering approval only).

For multiple layers of conduit, see Construction Standard U2-11, Network Construction Guideline NDK-10, and Material Standard 7150.00 that recommend or require fluidized thermal backfill (FTB) as concrete encasement. Red dye shall be added to the encasement concrete mix at the rate of 4 pounds per yard. An FTB mix is also recommended for backfill.

5. For cable or conduit **installation on private property**, see Construction Guideline U12-1.4 / NDK-60.

6. Bending of PVC conduit with heat (e.g., heat blankets or hot boxes) is prohibited. See Construction Standard U2-11 Note 8, or in the Network area, Network Construction Guideline NDK-10 Note 10.

7. Working Around City Light Cables And Conduits

During new construction around existing City Light cables and conduits, hand digging is required within the red, locate-lines until the duct banks are exposed. Use of an earth auger for construction will require case-by-case direct supervision by City Light. During construction projects, installations of shoring, shoring piles and shoring lagging shall maintain a separation from City Light conduits, duct banks, vaults and manholes of no less than one foot for the duration of construction.

8. Vaults Between Terminal Poles

All primary dips between two terminal poles, regardless of wire size, should have at least one vault installed in the run. Exceptions should be engineered to assure ease of cable replacement or restoration.

9. **Planting Clearances**

Figure 5, Planting Clearances

Trees and other vegetation shall not be planted within 2 ft of SCL vaults and ducts

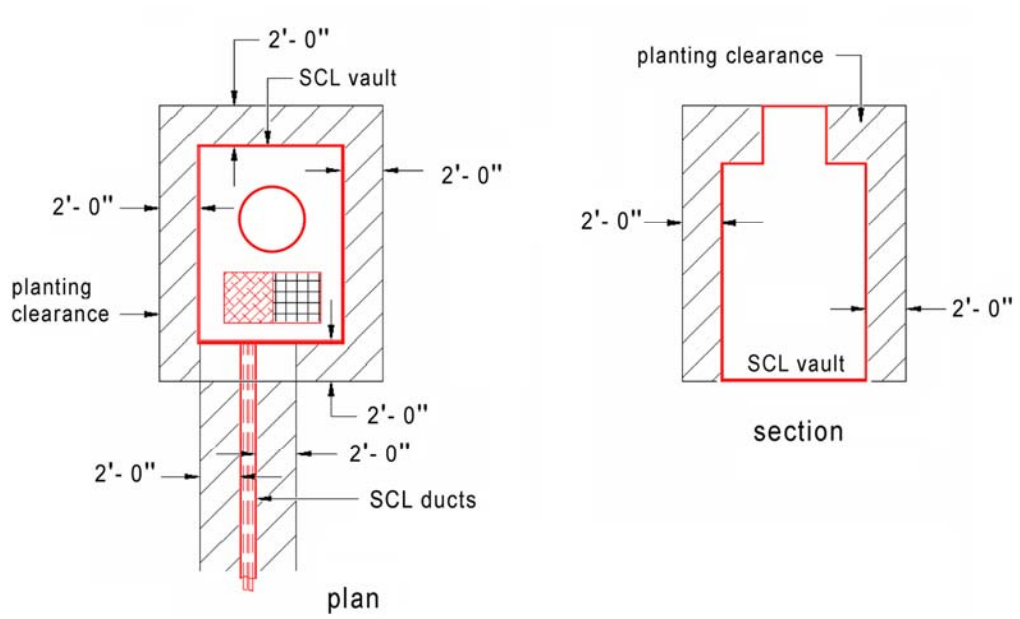

INSTALLATION OF NONMETALLIC CONDUIT WITH CONCRETE OR FTB ENCASEMENT

Figure 1.

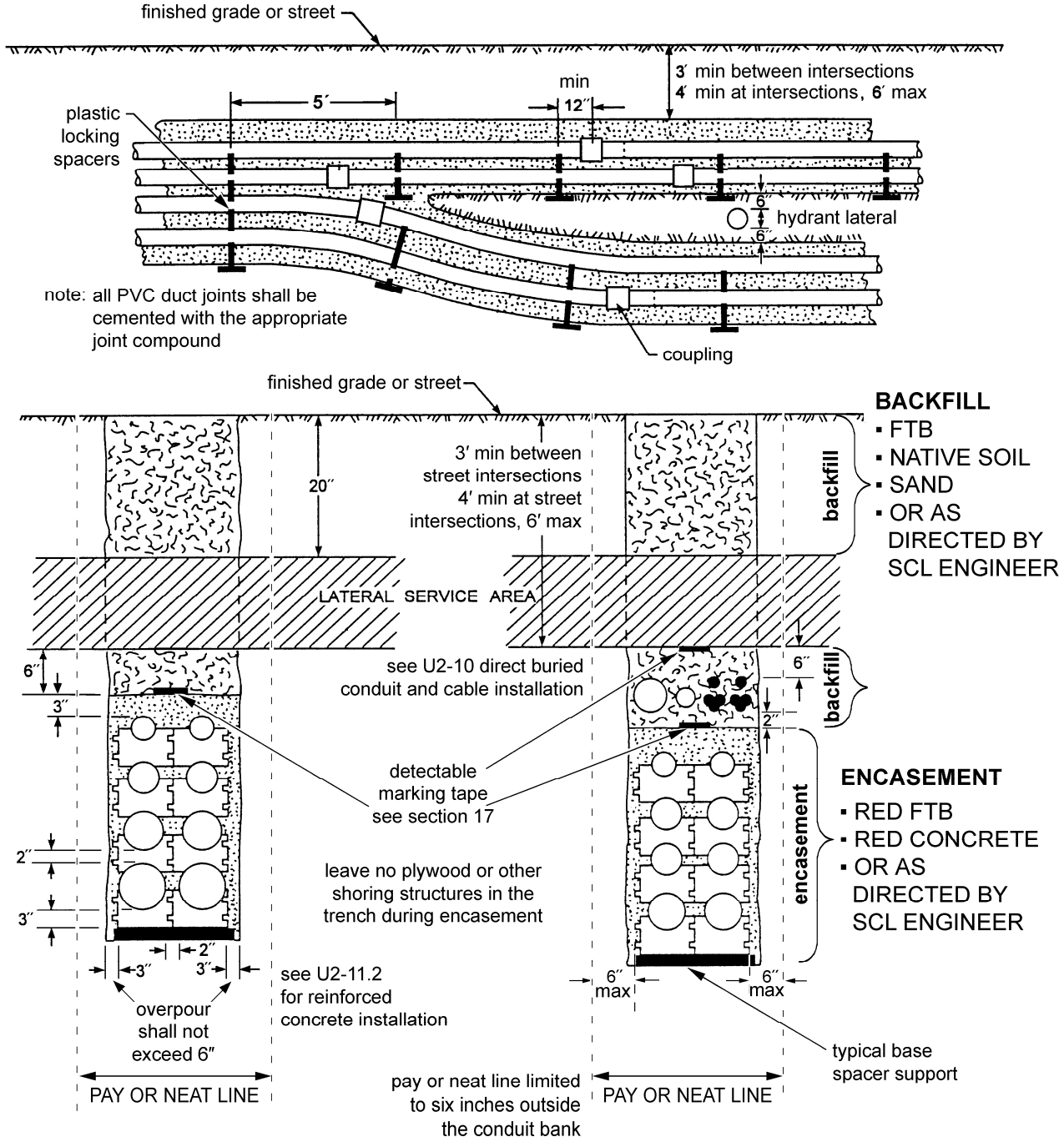

See sections 1 and 2 for encasement and backfill exceptions for service conduits.

standards coordinator	standards manager	unit director
Brett Hanson	John Shipek	Pamela S. Johnson

1. Location and Depth

See City of Seattle Standard Plan No. 030 for location and depth of ducts and services in public right-of-way (Seattle City limits).

2. Duct Size and Description

In the in the URD area, install 6-inch Schedule 80 PVC conduit for new duct installations that are planned for primary cables of 600 amps and above.

3. Trench Construction

- **Depth and Grade.** Excavate trench to proper depth and grade. Minimum grade shall be plus or minus 3 inches per 100 feet for drainage between terminations. Vertical changes in grade (slope) shall be constructed with a minimum bend radius of 10 feet. For temporary terminations, the maximum grade for sand encased conduit shall not exceed 10% (see section 7).
- **Shoring Plywood.** Remove all plywood and other shoring materials and structures from the trench prior to encasement to allow maximum heat dissipation from conduits.

4. Clearances

Between street intersections, conduit encasements (see sections 10 and 11) shall be a minimum of 3 feet below the finished grade or the street level. Within street intersections, the depth to the encasement shall be 4 feet, minimum. The maximum depth to the encasement shall be 6 feet. Within the encasement, the top conduit shall be an additional minimum of 6 inches below the top of the encasement.

Encased conduit crossing power and communication ducts, sewer, storm and water mains (including hydrant laterals) shall have a 6-inch minimum clearance or be cushioned (supported) with Styrofoam or cushioning (support) acceptable to the utilities. Encased conduit crossing gas mains shall have a 12-inch minimum clearance or be cushioned (supported) to the satisfaction of the utility. Minimum vertical clearance from services shall be 3 inches unless modified otherwise by the owning utilities.

Encased conduit parallel to water and high pressure gas mains shall have a 60-inch minimum clearance horizontal to the utility.

5. Non-Transportation

Ducts should not be transposed between vaults unless it is absolutely unavoidable.

6. Communication Ducts

- **Communication Ducts:** On all new underground installations of duct banks, two-3-inch ducts shall be included for communication uses. The two communication ducts shall be placed at the top of the duct bank in all new public right-of-way runs. The engineer will determine if the communication ducts are to be routed to new service locations. See section 8. on bends.
- **Communication Duct Handholes:** Where possible the two communications ducts shall be routed into separate 444 handholes to be placed in the vicinity of adjacent vaults. Run communications ducts into the bottom of the handhole wall (see the drawing of typical handhole installations at the top of the page in Construction Standard U2-13.1). Communication duct handholes shall be placed at each street intersection, at mid-block, and in the vicinity of each vault. Communication duct handholes shall be numbered with the “C” preface (C-nnn). Occasionally it may be necessary to run the communication ducts into existing vaults.

Table 2, Material

Item	Quantity	Description		Stock No.
1a	as req’d	Conduit, PVC, Schedule 40		734524 thru 734530 and 010334
1b	as req’d	Conduit, PVC, Schedule 80		738740 thru 738746 and 010333
2a	as req’d	Couplings, standard end, PVC		734512 thru 734522 and 010343
2b	as req’d	End Bells, PVC		734944 thru 734949 and 010338
3	as req’d	Spacers, plastic, non-metallic conduit		734669E thru 734692E, 010446 and 010447
4	as req’d	Cement, PVC, solvent		726680
5	as req’d	Cable Protector	2″ to 2-1/2″	731800E
			3″ to 6″	731801E

Figure 7.1, Encased conduit temporary termination - trench

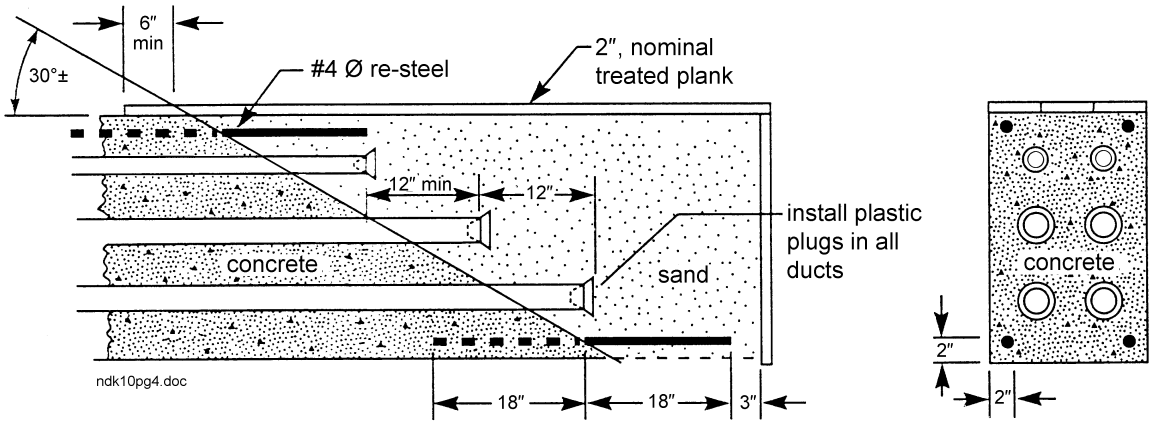

7. Duct Termination

Conduits to be terminated in a vault, handhole, or manhole may either be individually grouted to the structure wall or a bank of conduits may be encased to the wall in a concrete envelope. Such concrete encasement shall be finished smooth on the inside of the wall. All ducts shall be end belled flush with the inside wall of the structure. See Construction Guideline U2-11.3. See plugging requirement in section 15 of this Standard. All vault, handhole, or manhole penetrations shall be sealed to prevent water intrusion.

Figure 7.2, Encased conduit

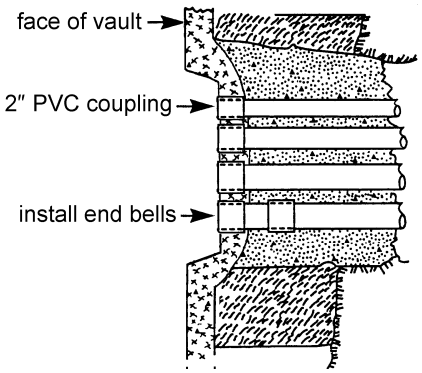

- **Cable Protector Marking:** Cable protectors, marked with the destination of the empty conduit, may be installed in the termination of empty conduits. Use a permanent marking pen for marking the cable protector. This is especially important for service or stubbed out conduits (i.e. those which do not go to another City Light vault).

Figure 7.3, Termination without encasement

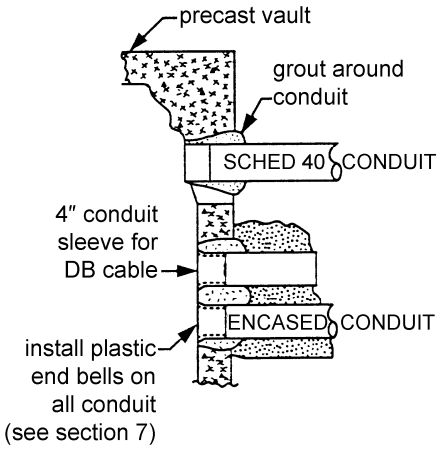

- **Temporary Terminating:** If concrete encasement is to be temporarily terminated, i.e., overnight, then remove the sand fill and treated planks. Install reinforcement steel whenever concrete placing is to be delayed beyond initial set of the in-place concrete.

Figure 7.4, Duct numbering

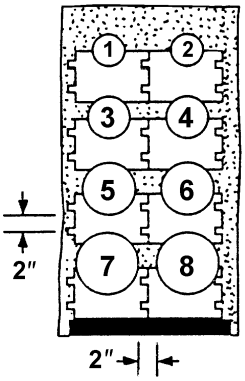

Duct references for field counting of ducts **looking east or north**:

For ducts *running east and west*, **count from north to south**.

For ducts *running north and south*, **count from west to east**.

8. Change In Direction

For a horizontal change in direction, the conduit may be cold-formed at about 68°F to minimum bend radii of 20 feet for 4-inch conduit, 30 feet for 5-inch, and 36 feet for 6-inch, provided the deflection does not exceed 15°. The installation of preformed PVC bends is expressly forbidden for any use except where approved by the Seattle City Light engineer. For a horizontal change in direction exceeding 15°, the sweep shall be effected with a 140-inch minimum radius bend of galvanized rigid steel conduit.

PVC conduit will not be allowed for system conduit bends. With prior written permission from Seattle City Light, fiberglass (RTRC) conduit sweeps of 140 inches, minimum radius, may be used. Steel bends shall be provided with PVC adapter couplings as required. Any conduit run that requires more than the equivalent of two 90° bends need to be approved by Seattle City Light Engineering.

The installation of preformed small radius bends (5°, 22.5°, 45°, etc.) is expressly forbidden for any use except where specified by the engineer for service conduit.

When duct runs change direction, the bend radii of the 3-inch communication ducts in the duct run shall match the radii of the larger dimension ducts to avoid communication ducts overhanging the rest of the bank. This may require special order 3-inch bends.

9. Spacers

Spacers for conduit separation shall be plastic lock-type of such configuration to give the required separation between conduit and earth as shown on the drawings. Horizontally, spacers shall be placed 5 feet apart in both straight and bending sections of duct banks. Three-inch base spacers shall be used to obtain the three-inch side cover under conduit. Base spacers may also be used to obtain three-inch side cover of conduit in bends. Two by four-inch (nominal) concrete or wood blocking, twice the area of the foot of the base spacer, shall be provided under base spacers. See Material Standard 7346.8.

10. Encasement

Conduit encasement shall be:

- Red, high strength fluidized thermal backfill (a concrete mix), or
- Red concrete (non-FTB formulas), or
- As specified by City Light engineer.
- Required if conduits are to be used for 600 V or higher.

High Strength Fluidized Thermal Backfill (FTB): High strength fluidized thermal backfill is a concrete mix and is the preferred material for encasement. For the **FTB** mixture, see section 11, below. Refer to Material Standard 7150.00. Where FTB is to be used for encasement, add red dye at the rate of 4 pounds per yard.

Non-FTB Concrete Materials: Concrete for conduit encasement shall be Class 5, manufactured with 3/8-inch minus gravel and with 1 ± 1/2 fluid ounces of "Sika AER" air entraining agent per sack of cement and sufficient water to produce a slump of 4 to 6 inches. Red dye shall be added to all concrete mixes as with FTB, above.

Placing Concrete: Place the concrete and vibrate to eliminate voids, taking care not to puncture, deform or float the conduit. As concrete heat expands the conduit, start placing concrete encasement from the middle of the run and work out both ways or start from one end and continue to the other end.

Cure Time: Wait 48 hours before backfilling and pulling cable.

Sealing Concrete: After the concrete has set, and to prevent dehydration of the concrete, seal the surface with either Hunt Process Sealer or loose moist backfill material.

Native Soil: Where **native soil** is used, rock diameters shall be limited to 3/4 inches and the first three feet outside the vault or manhole shall be encased and sealed to prevent water intrusion.

11. Backfill

Backfill shall be

- fluidized thermal backfill (FTB),
- native soil,
- sand
- or as directed by the CL engineer.

Fluidized thermal backfill (FTB) is the standard City Light backfill and encasement product. City Light orders FTB in two mixtures, low and high strength. FTB is a flowable, controlled density fill with know thermal characteristics and contains aggregate, fluidizer (fly ash), and cement. Refer to Material Standard 7150.00 for requirements.

Native soil. Where **native soil** is used for backfill, rock diameters shall be limited to 3/4-inches.

Sand for backfill shall be washed building sand, thoroughly saturated with water and mixed to a fluid consistency. Sand shall conform to the gradation shown in the table below.

Sieve Size, in	Percent Sand Passed by Weight	Sieve Size	Percent Sand Passed by Weight
2	–	No. 4	95 - 100
1-1/2	–	No. 8	–
1	–	No. 16	45 - 80
3/4	–	No. 50	7 - 30
1/2	–	No. 100	0 - 6
3/8	100	No. 200	0 - 2.5

11. Backfill, continued

Note, this Standard does not apply to the **Network Area.** See Network Construction Guideline NDK-10. Only red-dyed, FTB concrete (high strength) is to be used in the Network system for encasing conduit. Fluidized thermal backfill (FTB) is required to backfill around conduit in the Network. Sand is not permitted for these Network system applications.

12. Conduits Entering Vault

When two sets of conduits (encased or direct burial) enter horizontally and at right angles to each other in the same corner of a vault, manhole or handhole, they shall enter at different elevations, i.e., one shall be vertically offset to the other. The encased conduit shall terminate to 1/2 inches of perpendicular, horizontal and vertical, for the 2 feet of minimum concrete encasement. Similarly, direct burial conduit shall terminate to 1/4 inches per foot of perpendicular.

13. Mandreling

Conduit bends shall be mandrelled prior to placement and encasement. After the concrete is placed the entire run shall be cleaned and mandrelled. Mandreling shall be done in the presence of an SCL Electrical Reviewer. See Construction Guideline U2-11.40.

14. Water Jet Cleaning

Conduit runs of 5-inch or larger shall be flushed with a water jet type system such as the “Jet Rodder” equipment. Completion subject to SCL inspector’s approval. See Construction Guideline U2-11.40.

15. Plugs

After cleaning and mandreling, each conduit shall be plugged with plugs of the type and manufacturer specified in Seattle City Light Material Standard 7345.7.

16. Vaults Between Terminal Poles

All primary dips between two terminal poles, regardless of wire size, should have at least one vault installed in the run. Exceptions should be engineered to assure ease of cable replacement or restoration.

17. Detectable Underground Marking Tape

Install 3-inch wide red detectable underground marking tape, Stock No. 736800, on top of duct bank and also above any direct-buried cables and/or conduits.

REINFORCEMENT OF CONCRETE ENCASED DUCT RUNS

1. When the engineer determines that concrete encased duct runs need reinforcement, the reinforcement shall consist of #4 Grade 40 or Grade 60 deformed bars placed longitudinally in the duct run and tied with #3 closed stirrup at 18 inches on center. All reinforcing shall conform to ASTM Specification A 615-82.
2. The number of longitudinal bars per duct section shall be the next highest even number to that number determined by the equation N = 0. 12 (W+D) - 0.72, where N = number of bars, W = width of duct, and D = depth of duct envelope in inches.
3. The first four bars shall be placed in the corners of the concrete envelope. All bars thereafter shall be equally spaced between the corner bars. The longitudinal bars shall have a minimum of 2 inches of concrete cover. Minimum splice length for #3 and #4 bars shall be 12 inches. Longitudinal splices are to be staggered 6 inches or increase overlap to 18 inches. Rebar shall be embedded in vault structure around duct penetration.
4. Red dye shall be added to the concrete mix at the rate of 4 pounds per yard.
5. Example: Assume duct envelope is 17 inches wide and 43 inches deep
   N = 0.12 (17 + 43) - 0.72 = 0.12 (60) - 0.72 = 7.20 - 0.72 = 6.48
   Use 8 - #4 bars

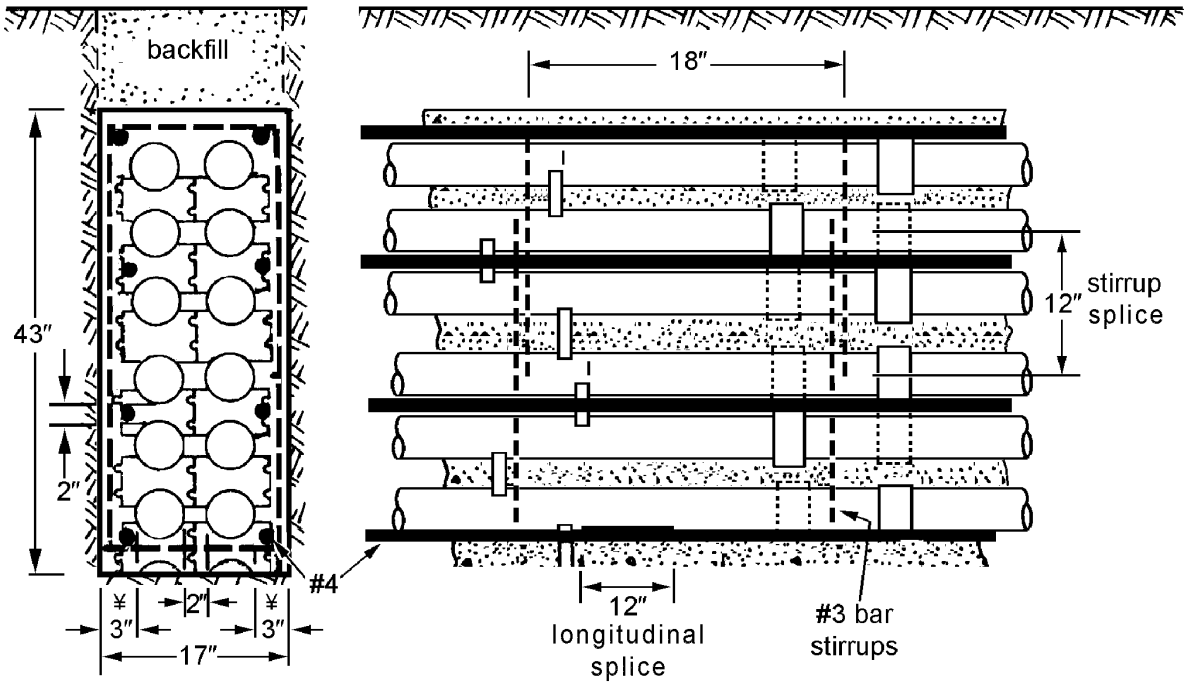

standards coordinator	standards manager	unit director
Brett Hanson	John Shipek	Pamela S. Johnson

TERMINATION of EXISTING DUCTS in NEW VAULTS or MANHOLES

When enlarging or installing new manholes and/or vaults, all existing ducts shall be terminated in the new structure using the appropriate method of the following three. This shall apply to all ducts unless noted otherwise. In all cases 6 each 1/2" steel rebars shall be located as shown and terminated 3" from the face of the wall. On new installations, one additional 4" duct for fiber optics shall be included in the duct bank. In the network area, ducts shall be terminated in an 8" window 45° to the inside of the vault. On new installations in the network area, two additional 2" ducts shall be included in the duct bank. A system neutral shall be pulled into one of the 2" ducts and connected to ground as an aid in locating the duct bank.

1. ROUND DUCTS: The ducts, regardless of the material, shall be cut back to allow for installation of the vault and later extended into the structure. The extension shall be encased in a minimum of 2" of concrete. All ducts shall be end belled flush with the inside wall of the structure. The 2" duct shall be end belled with a coupling. This is to allow the possible connection of a pump discharge The existing duct encasement shall be painted with undiluted polyvinyl acetate bonding agent, "Weldcrete", prior to pouring the new concrete.

2. SQUARE TILE DUCTS: The existing ducts shall be cut square with the inside wall of the structure and shall be beveled by grinding and/or adding grout to form a bevel.

   SQUARE TILE DUCTS ALTERNATE: (Only with the written approval of the Network Engineering Manager). The ducts shall be removed back to the next joint (minimum of 24") and a square-to-round adapter (City Light Stock number 734565) installed. Extend the (now) round ducts into the structure and install end bells and encasement as for round ducts. The spacing at the structure wall shall be 2".

3. DUCTS WITH EXISTING CABLES: When existing cables cannot be removed, square-tile ducts may be cut flush with the inside wall or; if converted to round ducts the extension may be split lengthwise and securely wired together over the cables prior to encasing them in concrete. The joint shall be taped to prevent concrete entrance into the duct.

4. EMPTY DUCTS: Cable protectors, marked with the destination of the empty conduit, may be installed in the termination of empty conduits. Use a permanent marking pen. This is especially important for service or stubbed out conduits (i.e. those which do not go to a City Light vault).

5. **NON-TRANSPOSITION**: Ducts should not be transposed between vaults unless it is absolutely unavoidable.

ORIGINATOR	STANDARDS COORDINATOR	STANDARDS SUPERVISOR	UNIT DIRECTOR
Jim S. Horn	Charles L. Shaffer	John C. Skinner	Betty Robin

TERMINATION of EXISTING DUCTS in NEW VAULTS or MANHOLES

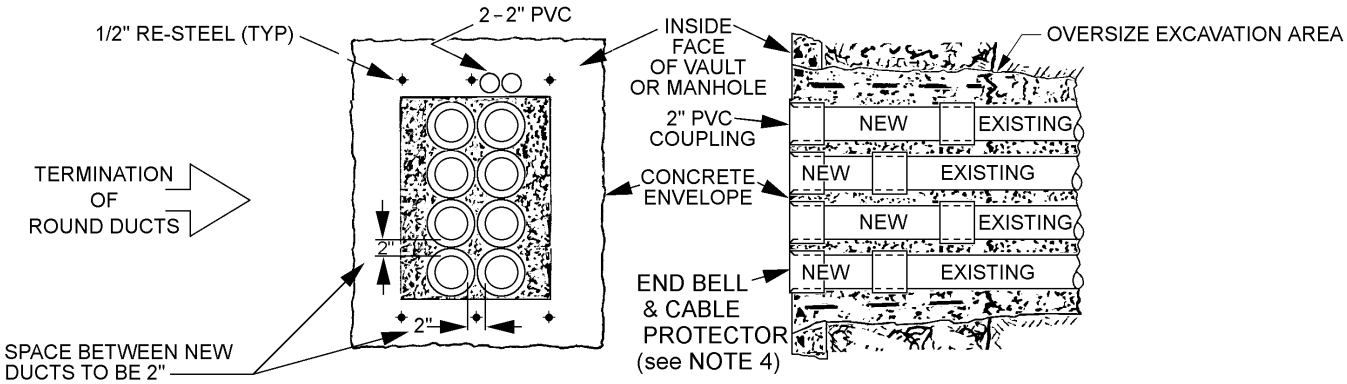

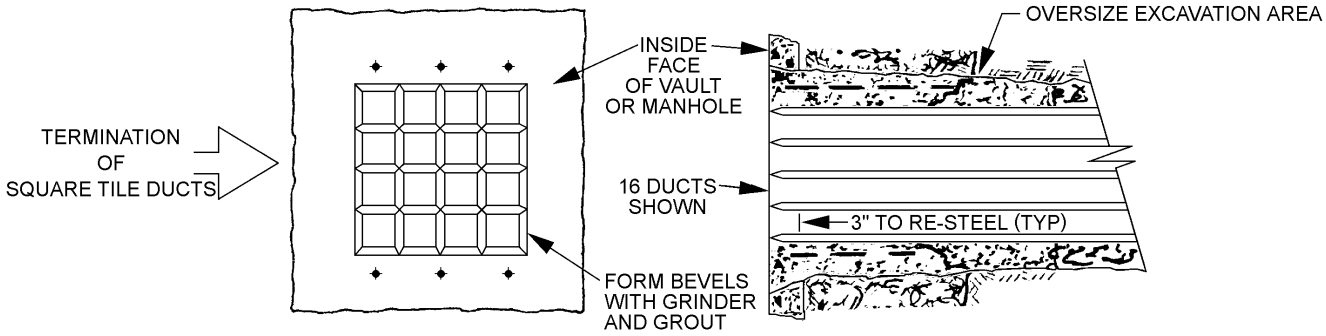

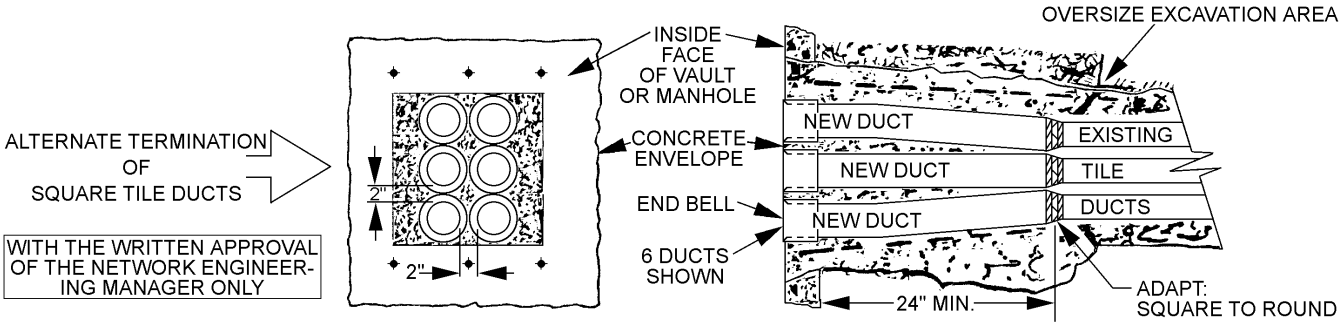

WITH THE WRITTEN APPROVAL OF THE NETWORK ENGINEERING MANAGER ONLY

Seattle City Light

CONSTRUCTION STANDARD

MANDRELING AND CLEANING OF DUCTS AND CONDUITS

1. After the concrete has been poured or the trench backfilled over conduit each and every duct run and **conduit shall be tested** for obstructions or flattening by pulling a non-flexible wood mandrel of appropriate size through the duct or conduit within 5 days of installation. If an obstruction is found in a duct or conduit, that section shall be replaced.
2. **Cleaning** ducts shall be performed by drawing a brush with stiff bristles and a swab through each duct and conduit to make certain no foreign materials are left in the duct.
3. Conduit runs of 5 inches or larger **shall be flushed** with a water jet type system such as the "Jet Rodder" equipment. Completion subject to SCL inspector's approval.
4. Cleaning and mandreling operations may be performed **simultaneously**.
5. After cleaning and mandreling, each conduit shall have left in it a flat, pre-lubricated, polyester or Aramid **pull tape** of 2,500 lb. minimum tensile strength (Fibertek Inc. or equal; City Light Stock Nos. 012293 and 012480). The pull tape shall be printed with sequential footage markings. Every conduit not part of a duct bank shall contain a 3-inch wide detectable underground marking tape, red-colored, Reef Industries "Sentry Line" #42-0110 or Pro-Line Safety or equal (City Light Stock No. 736800).
6. After cleaning and mandreling, each conduit shall be **plugged** with plugs of the type and manufacturer specified in Seattle City Light Material Standard 7345.7.
7. **Mandrel Sizes**

Conduit Size, in	Mandrel Diameter, in	Mandrel Length, in
3/4	0.62	1.00
1	0.78	1.25
1-1/4	1.00	1.50
1-1/2	1.25	1.75
2	1.62	2.25
2-1/2	2.00	2.75
3	2.50	3.25
3-1/2	3.00	3.75
4	3.50	8.00
5	4.75	12.00
6	5.50	12.00

8. **Typical Mandrel Configuration**

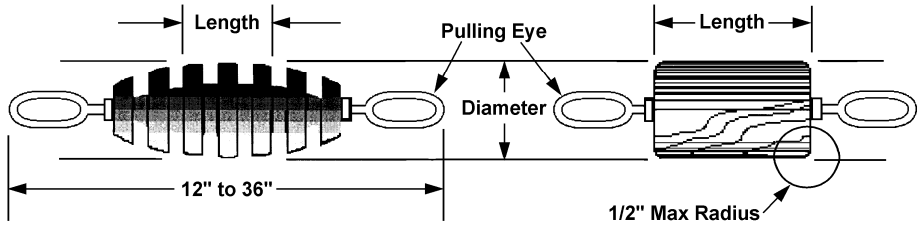

Flexible Cutting Mandrel
Not for Proofing - for Cleaning Only

Wood Mandrel

standards coordinator	standards manager	unit director
John Shipek	John Shipek	Pamela S. Johnson

THERMAL BACKFILL FOR HIGH VOLTAGE CABLES

1. SCOPE

The work consists of placing thermal backfill material around the steel line pipe as shown on the drawings and as specified.

2. MATERIAL

2.1 Thermal Backfill material shall be a mixture of washed sand and pea gravel having the following properties:
(1) Dry density, uncompacted, not less than 98 lb./cu. ft.
(2) Maximum density, dry unit weight at optimum moisture content of 14 to 15 percent, not less than 112 lb./cu. ft.
(3) Thermal resistivity at maximum density and optimum moisture content, not greater than 73 C-cm/watt.

Material obtained from the gravel pit located at Steilacoom, Washington, owned by either Pioneer Sand and Gravel Company or Glacier Sand and Gravel Company, meets the above requirements. If the contractor proposes to furnish the above material from other sources, he shall have the material tested for conformance to the requirements of this paragraph by a testing laboratory approved by the City Light Engineer, and a certified copy of the tests shall be submitted to the City Light Engineer for approval prior to the use of the material.

2.2 Mixing: The material shall be prepared by thoroughly mixing the aggregates in a concrete ready-mix plant batch mixer or in a transit mixer until completely and uniformly blended. Water shall be added, if necessary, so that the material will flow readily from the mixer and along the pipe.

2.3 Proportions: Thermal backfill material shall be prepared from the following mixture of aggregates by weight measurement.

Pea gravel, 100% passing 3/8-inch square sieve, and 5-7% passing U.S. No. 8 sieve.	1 part
Sand, Grading No. 2, Section 37 - 2.02B2 City Of Seattle, Standard Plans and Specifications.	3 parts

3. THERMAL BACKFILL PLACEMENT

3.1 General: After acceptance by the City Light Engineer of the last electrical flaw field test of the exterior pipe and joint coating, thermal backfill shall be placed around the pipe in the trench. The backfill shall be placed as soon as possible after acceptance of the test. Coated pipe left in the trench overnight and not covered by thermal backfill shall be electrically flaw tested again before placing the backfill around the pipe.

3.2 Placement: The thermal backfill material shall be transported to the job site without segregation.

Before placing the backfill, the Contractor shall check the space between the pipe and the walls and the bottom of the trench with a suitable template to verify that a minimum of six (6) inches of space exists between the side or bottom of the excavation and the pipe. If less than the required space exists in any location, the Contractor shall excavate additional material until the required space is provided.

The material shall be carefully placed evenly on both sides of the pipe by pouring the material through chutes, taking care to deflect the material from the top of the pipe so that the material does not fall directly on the pipe. Dumping thermal backfill material will not be permitted.

ORIGINATOR	STANDARDS COORDINATOR	STANDARDS SUPERVISOR	UNIT DIRECTOR
Jim S. Horn	Charles L. Shaffer	John C. Skinner	Betty Robin

3.2 Placement (Continued)

The material shall be spread so that no damage occurs to the pipe and its coating and so that the pipe is intimately bedded in the material. Around horizontal sections of the pipe, the material shall be placed in two (2) layers, the top of the first layer slightly below the top of the pipe and the second layer deep enough to provide the minimum depth of material over the pipe specified below. Around vertical riser pipes, the material shall be placed in layers two (2) feet in depth.

3.3 Compaction: The material shall be compacted by a concrete vibrator which shall be in operation at each point of placement of the material on both sides of the pipe. Extreme care shall be taken at all times to prevent contact of the vibrator with the coating on the pipe. Any foreign matter such as rocks and dirt that fall into the trench during placement of the thermal backfill shall be removed.

The thermal backfill material after compaction shall be a minimum of 12 inches over the top of the pipe and six (6) inches on each side and bottom of pipe.

4. PAYMENT

Except as provided below, no separate payment will be made for the work included in this section of the specifications, the cost thereof shall be included in the prices bid in the Proposal for “Excavate and backfill including thermal fill for 115 kV pipe cable system:....” in the applicable locations.

Payment for thermal fill replacing contaminated fill material ordered to be removed by the Engineer will be paid for at the unit price bid in the proposal for “Extra Thermal Fill” which price shall include the cost of furnishing, placing and compacting the extra material. Measurement for payment will be made of the inplace volume of the compacted material replacing the contaminated material.

SUMP PUMP PIPE INSTALLATION, VAULTS and MANHOLES
NEW 2” or REPAIR 1-1/4”

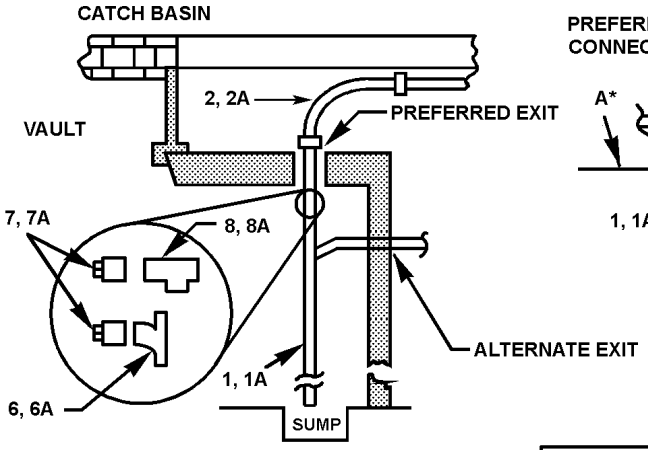

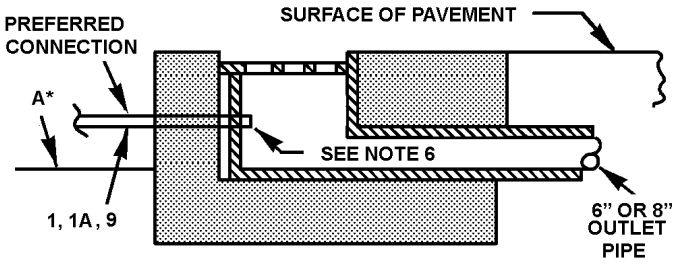

INLET TYPE	A*	OUTLET PIPE
Cast Iron	14-1/4”	6”
Concrete - Standard	20”	6”
Concrete - Large	23”	8”

MATERIAL LIST

Item No.	Quantity	Description	Stock No.
1, 1A	as req’d	CONDUIT, PVC, Sched. 40 , 2” or 1-1/4”	734530, 734528
2, 2A	as req’d	ELBOW, PVC, Sched. 40 DWV, 90°, 2” or 1-1/4”	710101, 710116
3, 3A	as req’d	COUPLING, PVC, 2” or 1-1/4”	734517, 734515
4, 4A	as req’d	ELBOW, PVC, Sched. 40 DWV, 45°, 2” or 1-1/4”	710100, 710114
5	as req’d	ELBOW, PVC, Sched. 40, 22.5°, 2”	734561
6, 6A	1	TEE, SANITARY, 2”, 1-1/4”	710118, 710110
7	1	PLUG, CLEANOUT 2”	710123
7	1	ADAPTER, CLEANOUT, 2”	710128
7A	1	PLUG & ADAPTER, CLEANOUT, 1-1/4”	710127
8	1	TEE, CLEANOUT, 2”	710122
9	as req’d	TAPE, MARKER/LOCATOR, Sump Pump Discharge	736900

ORIGINATOR	STANDARDS COORDINATOR	STANDARDS SUPERVISOR	UNIT DIRECTOR
Jim S. Horn	Charles L. Shaffer	John Skinner	Betty Robin

SUMP PUMP PIPE INSTALLATION, VAULTS and MANHOLES
DISCHARGE TO CURBS

STREET INSTALLATION

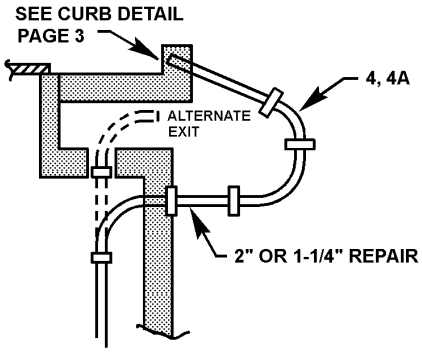

LOCATE CURB DISCHARGE DOWNHILL FROM VAULT

SIDEWALK INSTALLATION

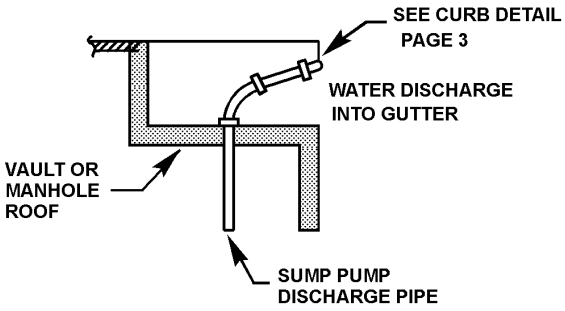

USE SWEEPS ONLY OUTSIDE VAULT

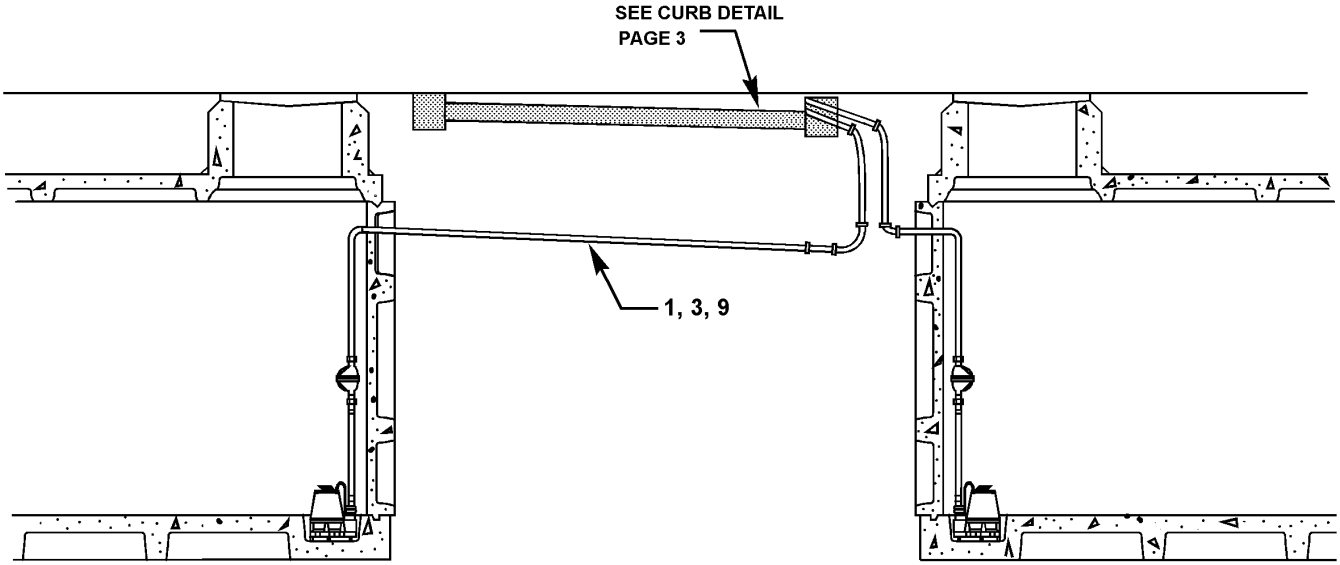

Always install curb discharge on low side of sloping streets.
Curb discharge should be downgrade from manhole or vault so water cannot recirculate.
Aim discharge 90° downgrade.

NOTE: USE WHEN SEWER CONNECTION IS EXCESSIVELY REMOTE.
See page 3 for anti-splash discharge in new or rebuilt curbs.

u2-12-1b.tif

SUMP PUMP PIPE INSTALLATION, VAULTS and MANHOLES
ANTI-SPLASH DISCHARGE in NEW or REBUILT CURBS METHOD of CONSTRUCTION
NEW 2" or REPAIR 1-1/4"

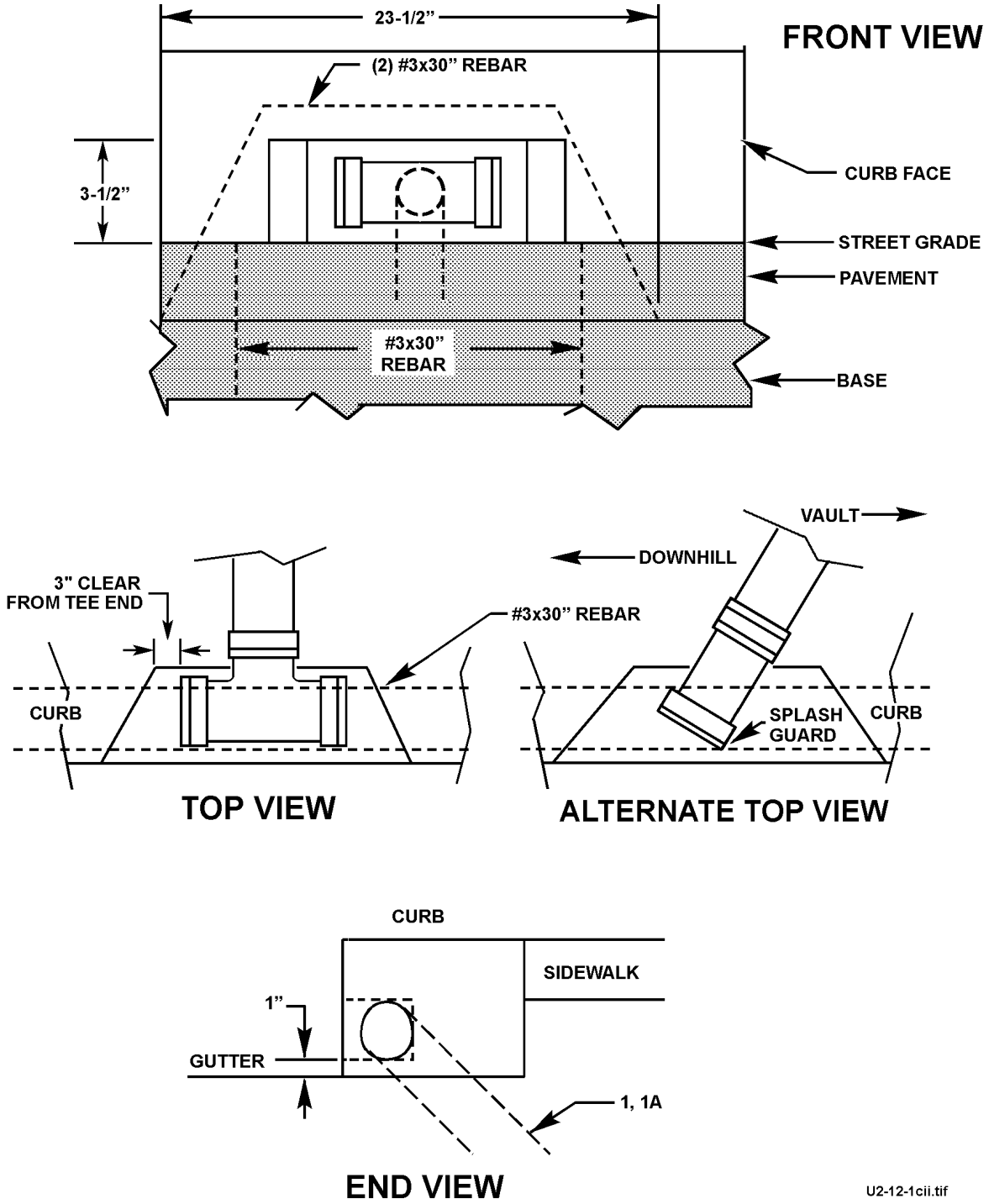

See Note 8, next page

SUMP PUMP PIPE INSTALLATION, VAULTS and MANHOLES

1. The pump discharge pipe should be routed to the nearest catch basin downhill from the vault. The second choice is a catch basin uphill from the vault within the limitations of paragraph three below. If neither of these methods are possible, the 2" PVC conduit may be discharged to the curb. Locate the discharge point downhill of the vault to conserve pump head and to avoid refilling the vault. Install anti-splash guard on all curb discharge pipes. See details on the contract drawings. 1-1/4" PVC conduit may be used to repair existing discharge pipes.
2. The total vertical lift, from sump to discharge point, shall never exceed 25 feet.
3. The preferred exit from a transformer vault or manhole is the hole in the roof slab, core drill only if not provided. An alternate exit through a wall knockout may be used when the elevation of the transformer vault is considerably higher than the elevation of the discharge point. In either case, the exit is to be caulked after insertion of the 2" PVC conduit. When the conduit is to be stubbed off in the vault or manhole, it shall extend at least 4" into the structure.
4. The discharge pipe from the City Light manhole or transformer vault shall enter the sewer manhole or catch basin below the cone. An "ell" shall used inside the sewer manhole to divert the water through the conduit to the base of the sewer manhole. Similarly an "ell" shall be installed inside the catch basin to divert the water downward. It is not necessary to carry the pipe to the base of the catch basin.
5. When entering curb inlets, the preferred entrance is through the back (end plate) of the inlet box. The PVC conduit should be installed so that it is flush with the inside surface of the box and sealed in place with mortar. Entrance shall never be made into the side of the inlet box. An alternate to the above procedure is to terminate the discharge pipe in a "wye" grafted to the concrete tile leading from the inlet box. The annular space around the PVC pipe in the "wye" shall be mortared closed.
6. All work in sewer manholes, catch basins, or curb inlet outlet pipes shall be performed by the City of Seattle Engineering Department using contractor furnished materials. The only exception to this policy is the connection at the back of the inlet box which shall be made by the contractor.
7. Install plastic marker/locator tape (Item 9) above sump pump discharge conduit.

SUMP INSTALLATION FOR EXISTING AND CAST-IN-PLACE VAULTS OR MANHOLES

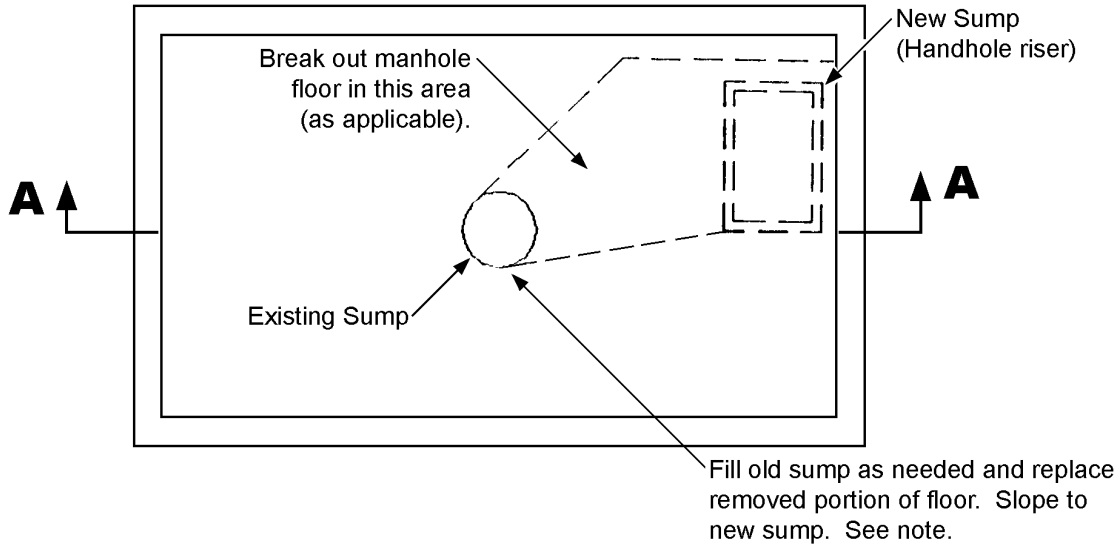

PLAN

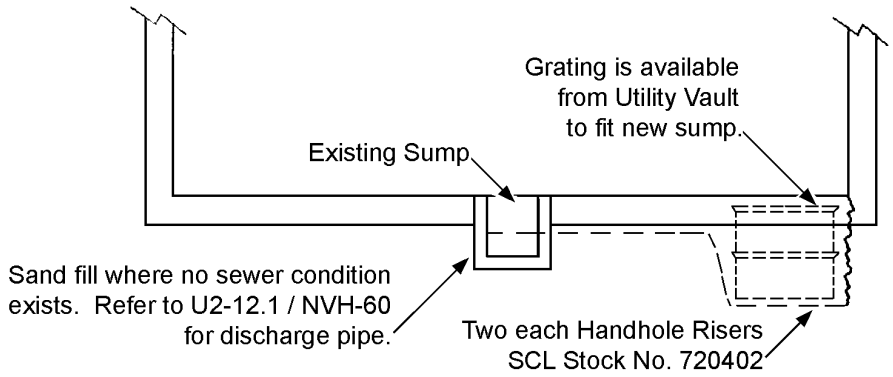

SECTION "A - A"

Note: Concrete shall be poured to one inch above the bottom of precast handhole sump. Paint outside of sump polyvinyl acetate bonding agent, "weldcrete", prior to pouring the new concrete floor. Vibrate or thoroughly tamp concrete to assure a good bond and seal to precast sump and floor. Smooth new concrete edges to match existing floor.

ORIGINATOR	STANDARDS COORDINATOR	STANDARDS SUPERVISOR	UNIT DIRECTOR
Jim S. Horn	Charles L. Shaffer	[illegible]	[illegible]

TYPICAL HANDHOLE WITH CONDUIT
Installation Details - Non-load Bearing

Install handholes 1 inch above grade in backfill, aggregate, and planted areas; in paved areas, install 1/4-inch above grade.

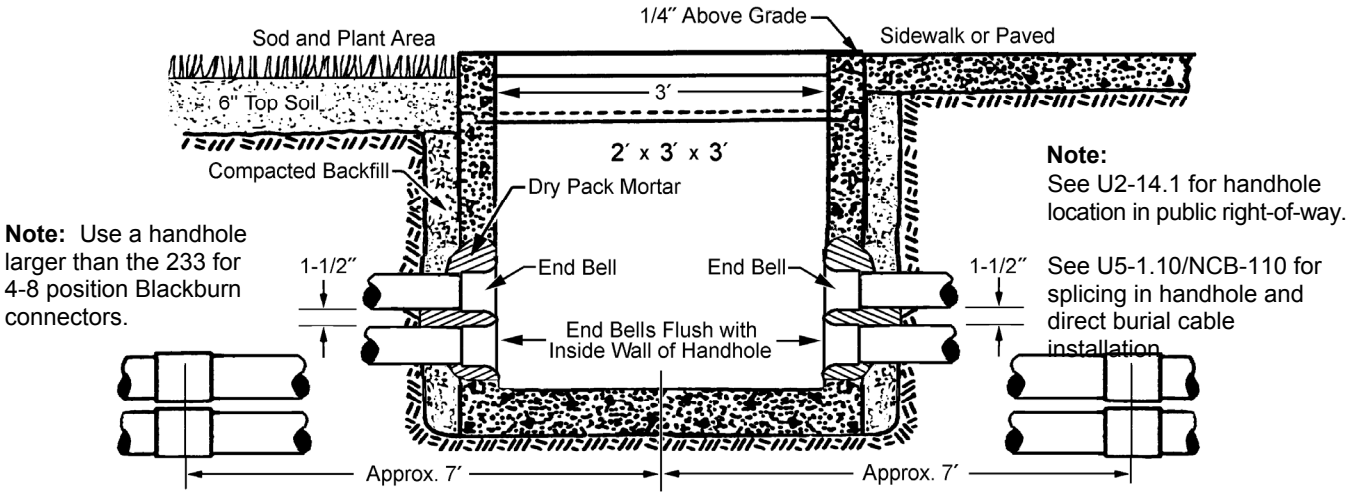

Note: Use a handhole larger than the 233 for 4-8 position Blackburn connectors.

Note:
See U2-14.1 for handhole location in public right-of-way.

See U5-1.10/NCB-110 for splicing in handhole and direct burial cable installation.

Note:
For installations of 3- or 4-six position Blackburns, or for 3-8 position BB, a maximum of one conduit sweep may enter under each side of a handhole. The sweep shall enter 9-inches on-center from the end. All other conduits shall enter the ends of the handhole.

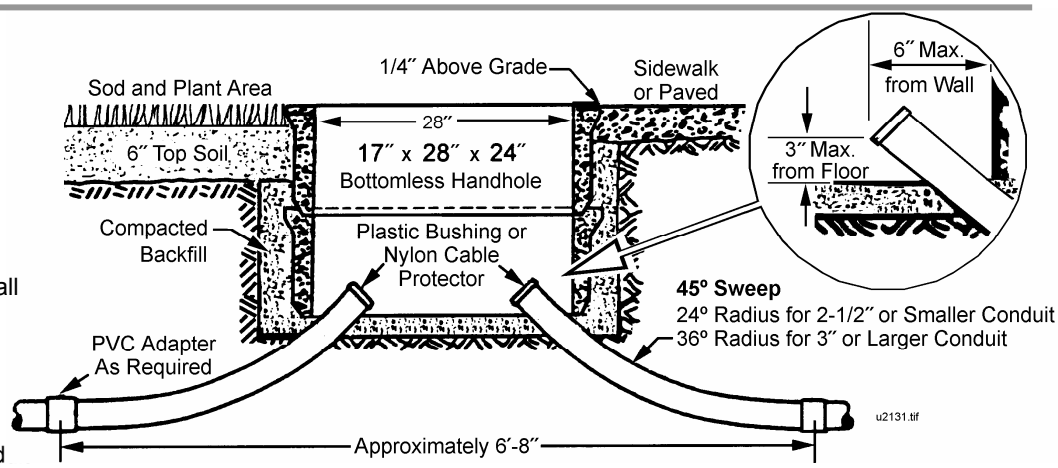

Offset conduit entrances so cables all wrap in the same direction.

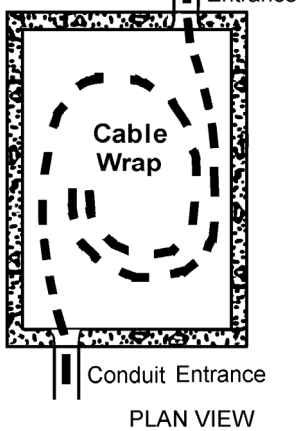

PLAN VIEW

Stock Number	Description	See Matl. Std. for Approved Manufacturers
720391	17″ x 28″ x 12″ precast handhole with cover	7203.10
720402	17″ x 28″ x 12″ precast extension	7203.10
012660	17″ x 28″ galvanized, slip resistant cover	7203.10
720393	17″ x 30″ x 12″ or 24″ - 26″ composite handhole	7203.12
720397	17″ x 30″ x 3/4″ or 2″ composite cover	7203.12
720394	24″ x 36″ x 18″ composite handhole	7203.12
720399	24″ x 36″ x 2″ or 3″ composite cover	7203.12
720388	24″ x 36″ x 36″ precast handhole with cover	7203.08

STANDARDS COORDINATOR	STANDARDS SUPERVISOR	UNIT DIRECTOR
John Shipek	John Barnett	Richard Kent

RESIDENTIAL EQUIPMENT LOCATION DETAILS
See Notes for Exceptions

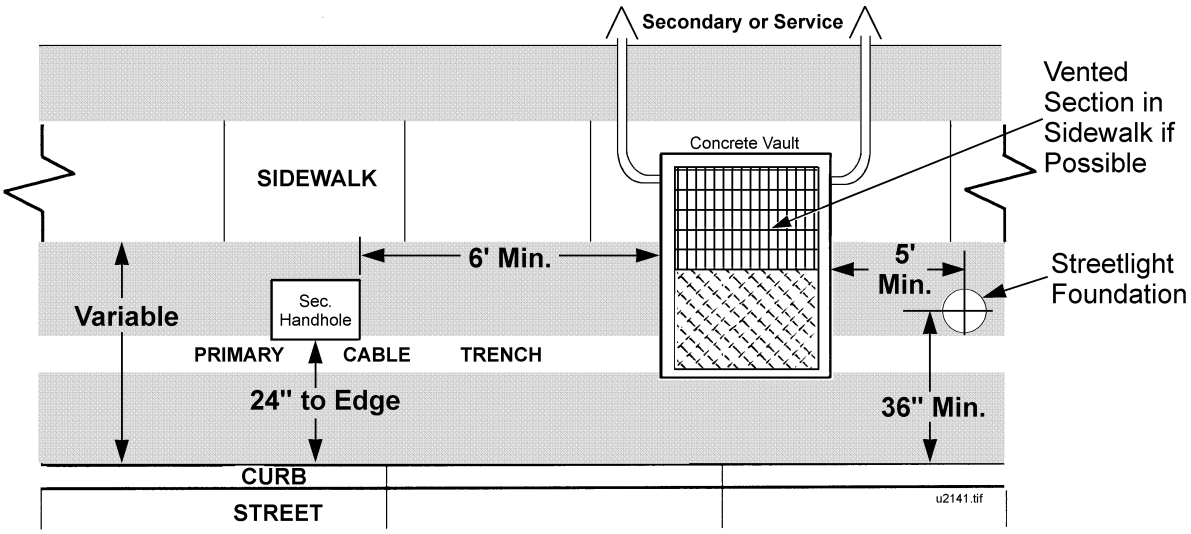

Preferred Orientation for 577 Vault with J-Box

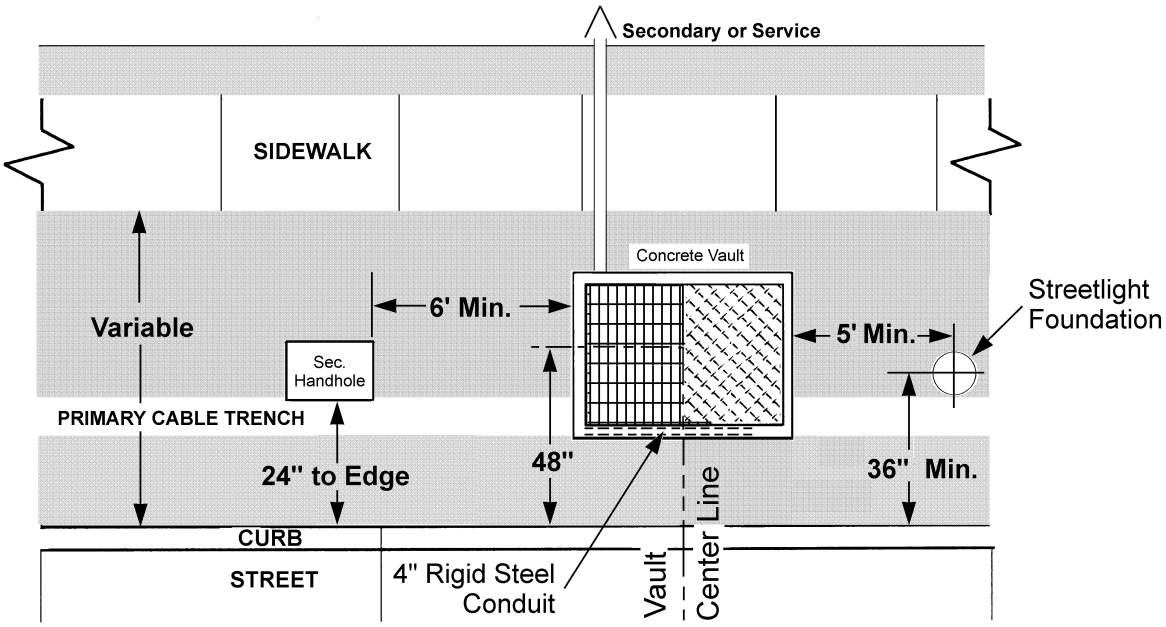

Alternate Orientation for 577 Vault with J-Box

See Construction Guideline U9-6 for clearance requirements for vaults with J-Boxes.

ORIGINATOR	STANDARDS COORDINATOR	STANDARDS SUPERVISOR	UNIT DIRECTOR
Jim S. Horn	Charles L. Shaffer	John C. Skinner	Betty Robin

RESIDENTIAL EQUIPMENT LOCATION DETAILS

Secondary Handholes
Preferred Locations

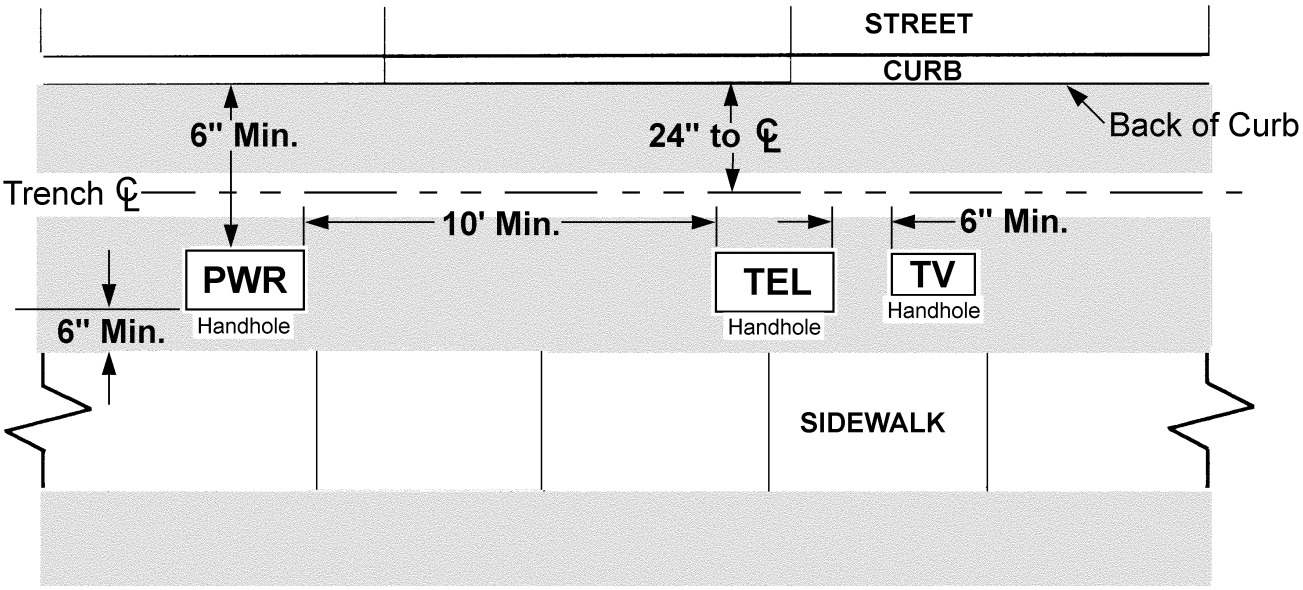

Alternate Locations in Sidewalks

Where required due to lack of handhole space in planting strips.

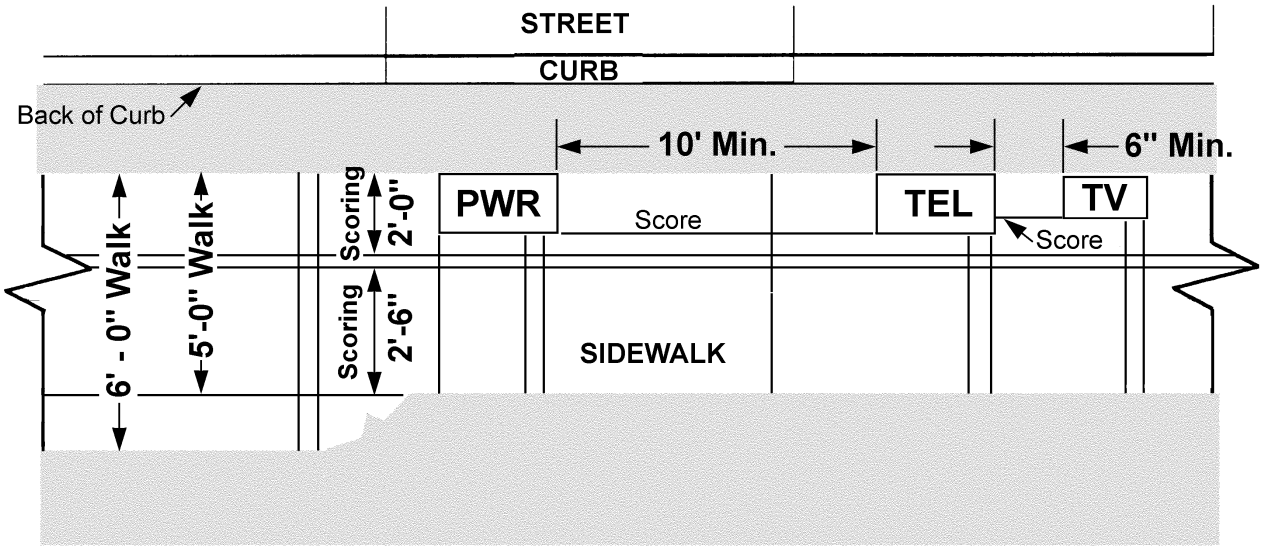

RESIDENTIAL EQUIPMENT LOCATION DETAILS

Notes:

1. The preferred vault orientation for combination transformer and J-Box in the 577 vault is with the length of the vault perpendicular to the curb. See page 1. See Construction Guideline U9-6 for clearance requirements for vaults with J-Boxes.
2. The length of the grated vent slots must run perpendicular to the dominant direction of travel of sidewalk traffic.
3. When in planting strip, top of vault to be set 1/2" above surrounding grade. Slope grade away from vault for drainage.
4. When vault or handhole extends into sidewalk area because of a narrow planting strip, the vault shall be located entirely in the sidewalk with the edge flush with the street edge of the sidewalk and to sidewalk grade. This applies only to the alternate location.
5. See drawings for changes in the dimensions above due to interferences.
6. See Construction Guideline U2-10 for trench details.
7. See Construction Guideline U2-14.2 or U2-15.1 for grade limitations on load break vault lids.

References:

1. Construction Guideline U2-14.2, Typical Vault or Handhole Installation
2. Construction Guideline U2-13.1, Typical Handhole with Conduit Installation Details
3. Construction Guideline U9-6, 577 Vault with 3 Loadbreak Junction Boxes – Installation, Grounding, and Connections

TYPICAL VAULT OR HANDHOLE INSTALLATION (5′ X 7′ X 7′ AND SMALLER)

Figure 1

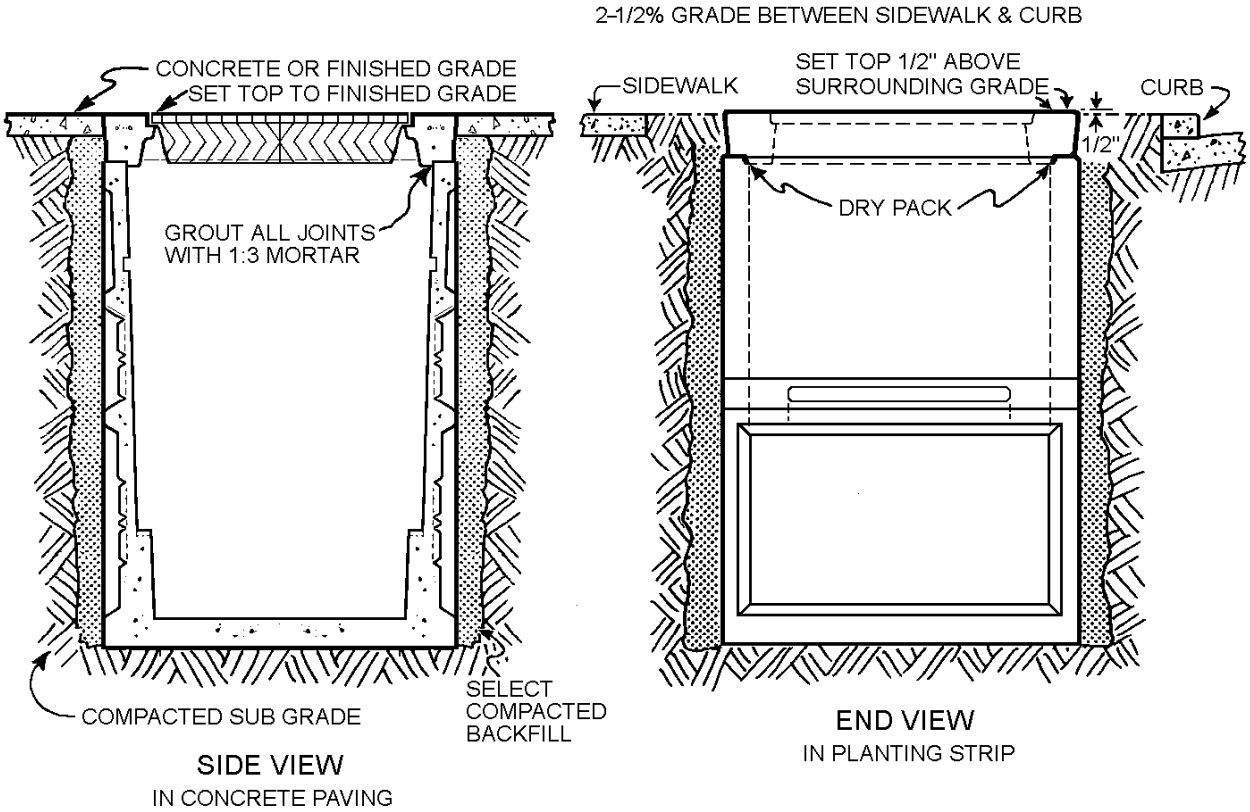

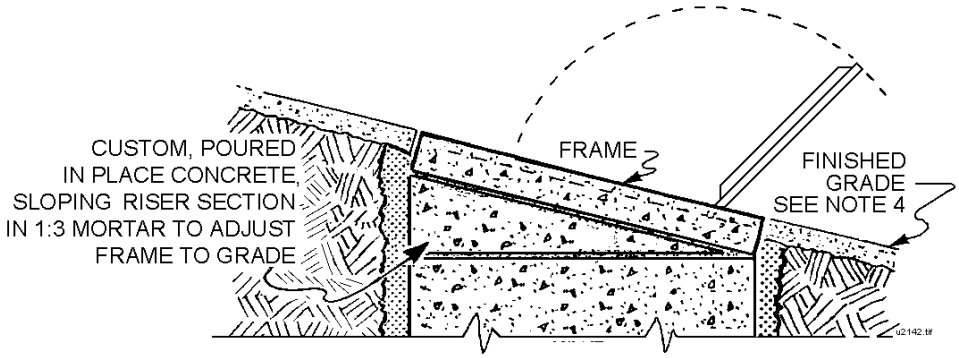

GRADE ADJUSTMENT DETAILS

standards coordinator	standards manager	unit director
Brett Hanson	John Shipek	Pamela S. Johnson

1. **All work, including shoring and bracing**, shall be in compliance with the latest editions of: State of Washington Department of Labor and Industries WAC 296-46B-450 “Equipment for General Use – Transformers and Transformer Vaults,” Chapter 296-155- WAC “Safety Standards for Construction Work”, Seattle Building Code Section 414 “Transformer Vaults” and Appendix Chapter 4, Division IV, Section 436 “Utility Transformer Vaults”, and Seattle Board of Public Works, “Street and Sidewalk Pavement Openings and Restoration Rules”.
2. **Concrete** shall be Class 5.5 as specified in “City of Seattle Standard Plans and Specifications”. Trowel smooth.
3. **Drypack and seal** all holes tight after installation to prevent water intrusion.
4. When adjusting the **vault entrance** to a sloping grade, install a sloping riser section and a poured-in-place collar. Do not use brick and mortar slope adjustments if possible. Minimize the use of mortar adjustments and in no case shall the mortar thickness exceed one inch. For in-street use, a properly engineered sloping riser section is required. Where the riser section is specified at 12 inches deep or more, order a length of Unistrut cast into the side wall of the riser.
5. On **sloping grade** installations, hinge vault covers as noted. Hinged vault hatches shall be placed so that they lie flat when opened. Load break vaults shall not be installed if the grade exceeds 5.6% in any direction. This is to ensure proper hot stick operations.
6. **The divider**, when used, must come up tight to the vault cover. Brick up as necessary, or if over 4" of increase is required, order a special divider.
7. For **transformer and J-Box combinations** in the 577 vault, install rigid steel conduit through the transformer section of the vault as shown on page 1 of U9-5.
8. The preferred **vault orientation** for combination transformer and J-Box in the 577 vault is the length of the vault *perpendicular t*o the curb. See U2-14.1, page 1.
9. The length of the **grated vent slots** must run perpendicular to the dominant direction of travel of sidewalk traffic.
10. Two 8 foot by 5/8 inch diameter copper clad steel **ground rods** shall be installed in opposite corners of each vault floor. The rod holes shall be caulked and grouted to prevent water intrusion.
11. Engineers shall specify **conduit entrance locations** into vault on work order. Contractors/installers shall verify before installation.
12. All covers (other than vented grates) shall have a **slip resistant surface** which has been approved by City Light Standards. If round lids are used – pave the area around the lid a minimum of four inches.
13. **References:**

    U2-13.1; "Typical Handhole with Conduit, Installation Details, Non-Load Bearing"; Construction Standard; SCL

    U2-14.1; "Residential Equipment Location Details"; Construction Guideline; SCL

    U9-5; "577 Vault Transformer and Junction Box Installation, Grounding and Connections"; Construction Guideline; SCL

    U9-6; "577 Vault with Three Loadbreak Junction Boxes Installation, Grounding and Connections"; Construction Guideline; SCL

INSTALLATION OF RING TYPE VAULTS

Figure 1, Typical Vault Installation

Vault configurations vary. Ring vaults are not acceptable in the Network area.

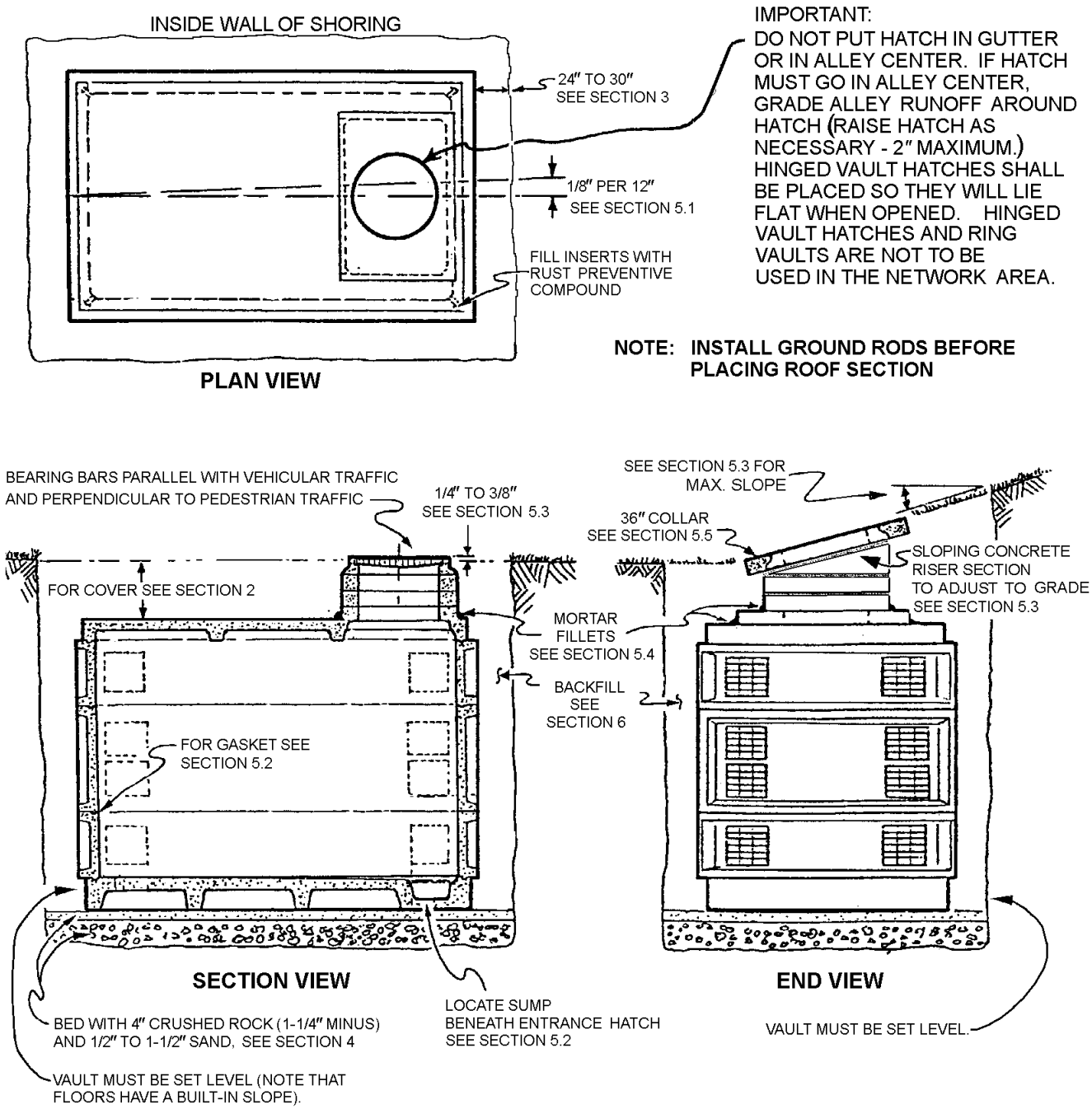

standards coordinator	standards manager	unit director
Brett Hanson	John Shipek	Pamela S. Johnson

1. Codes

All work, including shoring and bracing, shall be in compliance with the latest editions of: State of Washington Department of Labor and Industries WAC 296-46B-450 “Equipment for General Use – Transformers and Transformer Vaults,” Chapter 296-155 WAC "Safety Standards for Construction Work," Seattle Building Code Section 422 "Private and Utility Transformer Vaults," and the SDOT Director’s Rule 2004—02, “Street and Sidewalk Pavement Opening and Restoration Rules.”

2. Cover

The dimension from the vault top at the point of least depth to the pavement or ground above shall be as specified by Seattle City Light Work Order and/or construction drawings. Any deviation from this specification shall have the prior approval of the Seattle City Light Engineer.

All covers (other than vented grates) shall have a slip-resistant surface which has been approved by City Light Standards.

3. Excavation

3.1 Excavate so there is not less than 24 inches nor more than 30 inches between ends and sides of vault and the vertical sides of excavation or shoring unless larger excavation is authorized by the Engineer.

3.2 Remove shoring before backfilling.

3.3 If excavation bottom is saturated prior to placing bedding material, then over-excavate area as directed by the Engineer and place cobbles (3-inch to 8-inch stone – no broken concrete).

4. Bedding

4.1 If excavation is not saturated prior to placing bedding material, compact bottom of excavation with two full compacting operations at right angles to each other with a mechanical compactor.

4.2 Place a layer of crushed rock (1-1/4 inch minus), screed and compact to a minimum thickness of 4 inches, and 1/2 inch to 1-1/2 inches of sand to an even level surface.

5. Installation

5.1 Setting Tolerances

a. Maximum horizontal twist, end-to-end: Plus or minus 1/8-inch per 12-inch length of vault.

b. Minimum vertical, end-to-end: 1/2-inch plus or minus 1/4-inch (to insure proper drainage into sump).

5.2 Vault Parts

a. Do not install parts cracked or otherwise damaged so that watertightness may be impaired, or parts with reinforcing exposed.

b. If a sump is specified by the SCL engineer, refer to Construction Guideline U2-12.1/NVH-60 for installation. Locate sump at same end as personnel hatch (see below, 5. 3.).

c. For 814 and 818 vaults, place General Sealant G.S. No. 4 in joints between vault sections. For other vaults, place 5/8-inch by 1-inch butyl rubber “RUBATEX” gasket on the outer ridge of the interlocking joint.

5.3 Frame and Cover (Solid or Grate)

a. *In streets, alleys, parking lots, and other vehicle areas*, to match slope of vault entrance with surrounding grade, the acceptable methods are:

- Precast concrete sloping riser section
- Cast-in-place concrete sloping riser section

b. *In sidewalks and other non-vehicle areas*, to match slope of vault entrance with surrounding grade, the acceptable methods are:

- Brick and mortar if the mortar is less than 1 inch thick
- Precast concrete sloping riser section
- Cast-in-place concrete sloping riser section

c. Whenever the final grade of the hatch exceeds 10 percent (6 degree slope), the hinge side of the personnel hatch shall be located on the downhill side.

d. Maximum slope of frame and grate shall not exceed 2 inches in 12 inches without permission of SCL engineer. Load break vaults shall not be installed if the grade exceeds 5.6 percent in any direction. This is to insure proper hot stick operation.

e. Where the riser section is specified at 12 inches deep or more, order a length of Unistrut cast into the side wall of the riser.

f. Set riser in 1 inch of mortar (1 part cement to 3 parts sand with polyvinyl acetate bonding agent).

g. Adjust between 1/4 inch and 3/8 inch above grade to prevent water from entering vault, but not to cause a hazard. Ramp concrete to top of frame for gradual transition. Do not put hatch in gutter area. Put hatch 18 inches minimum away from curb line.

h. If using round covers in unpaved area install asphalt or concrete apron a minimum of four feet around cover.

5. Installation, continued

5.4 Seal Mortar

Place 2-inch, plus or minus, mortar fillets to seal out water at joints between vault top, cover slab, risers, and frame.

5.5 Concrete Collar

In areas other than concrete, set square or rectangular collar around the frame. Class 5 concrete collar shall be a minimum of 36 inches wide and a minimum of 6 inches thick. Reinforce collar with #4 bar placed in midsection, joints overlapped.

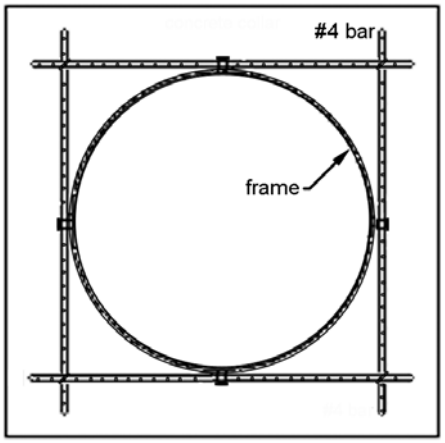

concrete collar

5.6 Filling Spaces

Fill spaces between ground rods and floor slab and other spaces through walls, tops and slabs with dry pack mortar mixed with “Weldcrete” polyvinyl acetate bonding agent in accordance with the manufacturer’s directions.

5.7 Ladder

Install a permanent ladder in the vault if the distance from the top of the cover to the vault floor exceeds 12 feet 6 inches. See Seattle City Light Drawing D-28304.

5.8 Grounding

Two 8-foot by 5/8-inch diameter copper clad steel ground rods shall be installed in opposite corners of each vault and shall be caulked and grouted to prevent water intrusion.

5.9 Conduit Entrances

SCL engineers shall specify the locations where the conduit enters the vault on the work order. Contractors/installers shall verify location before installation.

6. Backfill

Backfill with trench-type, controlled-density fill (CDF) that conforms to the City of Seattle Specification No. 9-01.5. Low-strength fluidized thermal backfill (FTB) that conforms to SCL Material Standard 7150.00 may be substituted with the permission of the SCL engineer. Place backfill so that no voids are left under the reinforcing ribs or riser sections.

The contractor/installer with the assistance of a Licensed Professional Engineer shall consult with the vault manufacturer to assure proper installation of the vault. Backfilling with some specified materials may require a multi-stage compaction processes to avoid damage to vault walls.

7. Vault Damage

Structurally damaged vaults shall be replaced or repaired. If the vault is to be repaired then a Washington State licensed professional engineer shall certify that the vault meets the original structural design parameters. For this Standard, vaults with exposed rebar are considered to be damaged under any circumstances.

8. Proximity to Sewers

Vaults or manholes set within 5 feet 0 inches of, or over, sewers will require replacement of the sewer pipe with ductile iron. The new ductile iron pipe must be placed beyond the vault at each end, a minimum of 3 feet 0 inches and/or into undisturbed soil at least 2 feet 0 inches. Contractor shall do excavation, backfill, and restoration. Installation of the pipe will be made by the Seattle Public Utilities Department.

9. References:

7150.00; "Fluidized Thermal Backfills"; Material Standard; SCL

7204.70; "Frames and Covers, 42-Inch Round, Iron"; Material Standard; SCL

NCB-20; "Grounding Network System Transformer Vaults, Wet, Dry, or Spot - Copper Bus"; Construction Guideline; SCL

NCB-30; "Grounding Network System, Wet Vault, Non-Transformer, One or Two 48-Inch Bus Bars"; Construction Standard; SCL

NDK-10; "Installation of Nonmetallic Conduit with FTB Concrete Encasement"; Construction Guideline; SCL

U2-11; "Installation of Nonmetallic Conduit with Concrete, FTB Encasement"; Construction Standard; SCL

U2-12.1/NVH-60; "Sump Pump Pipe Installation, Vaults and Manholes"; Construction Guideline; SCL

U9-7.3; "Grounding and Connection Diagram, Single Phase 26 kV Distribution Transformer"; Construction Guideline; SCL

VAULT, MANHOLE, HANDHOLE NUMBER IDENTIFICATION

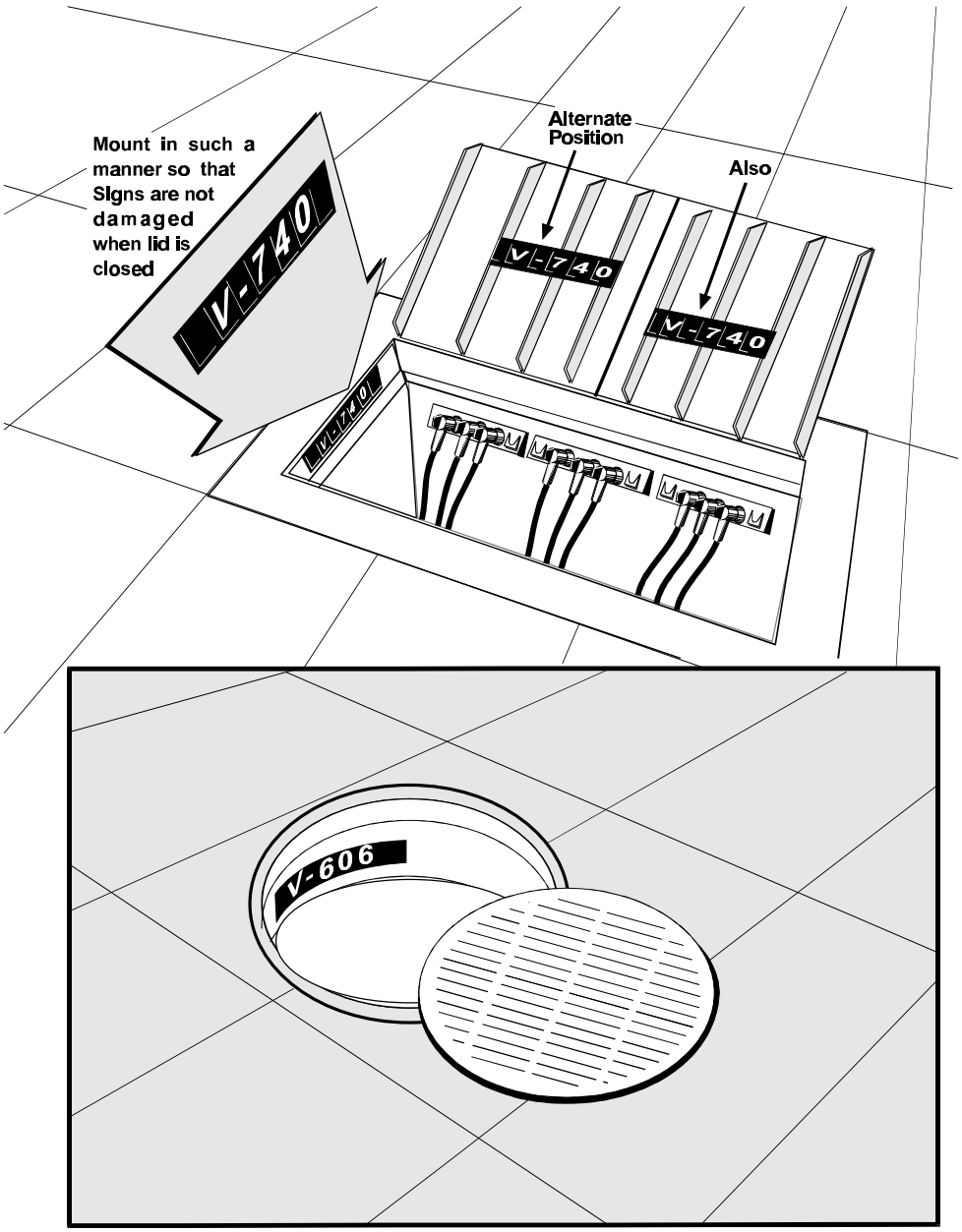

ORIGINATOR	STANDARDS COORDINATOR	STANDARDS SUPERVISOR	UNIT DIRECTOR
Jim S. Horn	Charles L. Shaffer	John E. Skinner	Betty Robin

VAULT, AND HANDHOLE NUMBER IDENTIFICATION

All vaults, and handholes, 6' X 7' and larger shall have self-sticking letters and/or numbers applied for vault identification. These letters and/or numbers shall be 2-7/8" x 1-3/4", yellow on black background. On unfinished concrete, concrete block, or other rough surfaces, apply the letters and/or numbers on a plastic panel (Stock No. 766300). Attach the plastic panel with four anchor nail drive anchors (Stock No.780010E).

When the access to the vault or manhole is through the roof, fasten the plastic panel with the assigned letters and/or numbers on in the vault neck so it can be easily seen from above when the hatch or cover is opened or removed. On vaults or handholes with multiple access hatches, apply identification numbers to all entrances. See the illustrations on page 1 of this Construction Guideline.

On the outside of vault or switchroom doors, attach the self-stick vault identification letters and/or numbers. Attach the pressure sensitive vinyl sign, "DANGER HIGH VOLTAGE" (Stock No. 765182) with top of sign 6 feet from floor. Beneath this sign apply self-sticking sign, "ELECTRICAL VAULT, AUTHORIZED PERSONNEL ONLY" (Stock No. 765209).

Apply the designated self-stick letters and/or numbers on a minimum of three interior walls at 5 to 7 feet above the floor.

Stock Unit: PK
25 per pack

MATERIAL LIST

ITEM	QUANTITY	STOCK NO.	DESCRIPTION
1	as req'd.	see Table 1	LETTERS & NUMERALS, Yellow ON Black, 2-7/8" x 1-3/4"
2	as req'd.	766310	PANEL, Blank, for above letters & numerals
3	as req'd.	780010E	NAIL, Anchor Drive, 1/4" x 1"
4	1 each	765182	SIGN, "DANGER HIGH VOLTAGE"
5	1 each	765209	SIGN, "ELECTRICAL VAULT, AUTHORIZED PERSONNEL ONLY"

TABLE 1
YELLOW on BLACK, 2-7/8" X 1-3/4"

STOCK NO.	NUMBERS	STOCK NO.	LETTERS
766310	0	766328	A
766311	1	766332	B
766312	2	766329	C
766313	3	766335	D
766314	4	766320	H
766315	5	766334	K
766316	6	766321	M
766317	7	766322	N
766318	8	766323	P
766319	9	766324	S
		766333	T
STOCK NO.	**CHARACTERS**		
		766330	U
766331	FDR	766325	V
766327	- (dash)	766326	W

PRE-CAST PANEL VAULT INSTALLATION, GENERAL NON-NETWORK AREA

1. Scope

This Construction Standard covers installation of a panel vaults in the looped radial (non-Network) area. It does not cover ring vault, poured in place, or in-building vault installations. It does not cover panel vault installation in the SCL Network areas.

2. Application

A panel vault is used as a structure to pull electric high voltage cable and/ or to house utility electrical equipment below grade.

This Standard is intended for use by contractors, SCL civil crews, SCL inspectors, and SCL design engineers for construction, inspection, and design.

3. Material List

Item	Component Description	Stock No.	Quantity
1	PANEL VAULT, including gasket and wall connection hardware	special order	1
2	GROUND ROD, 5/8 in diameter, 8 ft long	564238E	4
3	BEDDING, 1-1/4 in crushed rock	special order	as needed
4	CONTROLLED DENSITY FILL, trench backfill per City of Seattle 2005, Standard Specifications for Municipal Construction, Section 9-01.5	special order	as needed
5	GROUT, non-shrink, 3000 psi min	special order	included with vault

standards coordinator	*standards manager*	*unit director*
Brett Hanson	John Shipek	Pamela S. Johnson

4. Excavation, Trenching, and Shoring

4.1 Work shall be done per the Washington Administrative Code, Chapter 296-155 Safety Standards for Construction Work.

4.2 The depth of the excavation shall allow for the individual components of the vault to be lowered into place.

4.3 A minimum clearance of 24 inches to 36 inches around the sidewalls of the vault is required for installation.

4.4 The excavation hole must not contain water when setting the vault.

4.5 Installations in poor soils may require special dewatering systems to avoid settlement of surrounding areas, including pavement, sidewalks and structures.

4.6 Shoring:

a. For projects installed by SCL: the Civil Engineering group will provide shoring drawings. If there are no utilities in the excavation area, shoring boxes may be used.

b. For projects installed by a contractor: the contractor's licensed civil engineer will provide shoring design.

5. Bedding

5.1 The bedding material shall consist of 4 inches to 12 inches of stable base material.

5.2 If the excavation bottom is saturated prior to placing bedding material, then over-excavate area as directed by SCL engineer and place cobbles (3 inches to 8 inches stone – no broken concrete).

5.3 If excavation is not saturated prior to placing bedding material, compact bottom of excavation with two full compacting operations at right angles to each other with a mechanical compactor.

5.4 Place a layer of crushed rock, screed and compact to a minimum thickness of 4 inches, and use 1/2 inches to 1-1/2 inches sand to an even level surface.

6. Setting

6.1 General: First, the base section is lowered and leveled. Each of the wall sections in lowered and assembled. The seal surfaces between sections must be clean and the gaskets must be in place. The top ring is installed. Finally the lid is lowered and leveled.

6.2 Setting Tolerances:

a. Horizontal twist, end-to-end: plus or minus 1/8 inch per 12 inch length of vault.

b. Vertical, end-to-end: 1/2 inch plus or minus 1/4 inch (to insure proper drainage into sump).

6.3 Install gaskets per manufacturer's instructions.

7. Knockouts

7.1 Knockouts are provided in each of the four walls.

7.2 For conduit entry core drill the knockout area as appropriate. Knockouts should be removed per the SCL project specific drawing.

7.3 Knockout penetrations shall be sealed to prevent water intrusion.

8. Backfilling

8.1 Fill around the vault should be of a good compacting material such as CDF or other approved material. CDF shall be per City of Seattle - *Standard Specifications for Municipal Construction*. Material containing large rocks or chunks or saturated soils are not acceptable.

8.2 No voids shall remain between the external vault walls and the native soil of the excavation.

8.3 Backfilling should not be done until vault is completely assembled, floor, sides, and top ring.

8.4 Add the chosen backfill material evenly in 1 foot to 2 foot lifts to all sides of the vault. Back fill should be compacted progressively from the bottom to the top surface, as needed.

8.5 Remove shoring while backfilling.

9. Grouting

Apply to fill all voids in the joint being sealed to prevent water intrusion.

10. Top Vault Section, Including Hatches and Doors

10.1 Hatches and doors in the top section of the panel vault are project specific, including quantity and location.

10.2 All hatches and doors in a sidewalk or other pedestrian traffic locations are required to have anti-skid surfaces.

11. Vault Grounding System

11.1 Install four ground rods; one in each corner of the vault, in the PVC pipe installed by the vault manufacturer.

11.2 The rods shall protrude approximately 6 inches above the finished floor.

11.3 A driving head shall be used to prevent damage to the ground rod threads.

11.4 The space between the rods and the floor shall be caulked and grouted to prevent the entrance of water.

11.5 Test the resistance to ground; ground rods shall have a resistance to ground of 25 ohms or less. If the resistance exceeds 25 ohms, a SCL representative may ask for additional ground rods to be installed.

11.6 Install ground rods prior to placing roof section.

12. Proximity to Other Utility Installations

Refer to SCL Construction Standard U2-10, "Electrical Conduit and Facilities in Public Rights-of-Way", for required clearances to all utility conduits, mains, ducts, pipes and other installations.

13. References

"Safety Standards for Construction Work;" *Washington Administrative Code*, Chapter 296-155, Washington State

"Controlled Density Fill —Trench Backfill"; *Standard Specifications for Municipal Construction*; Section 9-01.5, City of Seattle; 2005

"Vault Installation Instructions"; Utility Vault; 2006

U2-10/NDK-50, "Electrical Conduit and Facilities in Public Rights-Of-Way"; *Construction Standard*; SCL

Siddiqi, Uzma; SCL Standards Engineer, subject matter expert and originator of U2-22 (uzma.siddiqi@seattle.gov)

dummy tab front - U4 - U5

dummy tab back - U4 - U5

BENDING, TRAINING, AND RACKING UNDERGROUND SECONDARY CABLE (SERVICES AND/OR BUS TIES)

TRAINING AND RACKING OF CABLE
Safe minimum bending radius, cable creepage and splicing requirements must be considered when training and racking cables.

The locations of cables in manholes and vaults are determined by the ducts they occupy. The cables should always be fanned out from the duct mouth so they do not cross other ducts or cables. This allows access to other ducts for cable replacement and inspection. Cables with bends starting at duct mouth must have a cable protector (mucket) installed. Newly trained cable will tend to straighten out. If the bend is too near the duct mouth, the bend will spread into the duct which will eventually cause sheath damage at the duct edge. Minimum bend radius shall be five inches. Generally, secondary cables (bus ties and services) will be in the uppermost ducts because only the upper ducts are available in the older handholes. Neutrals should be brought down to the ground bus as close to the duct as possible.

CABLE SUPPORTS - WALL MOUNTED
The most common type of cable support is a rack assembly consisting of a rack back or stanchion bolted on the wall with slots or holes where the hooks (steps) can be attached. The hooks vary in length. The spacing of the stanchions is determined by the number and the weight of cables to be supported. The maximum spacing should be about six feet. If primary cables are supported on the same rack backs, refer to Construction Guideline U4-3/NCI-170 for primary cable racking.

Wall-mounted supports for vertical runs (refer to Construction Guideline NCI-160) may be used in spot-network vaults for network protector or service leads.

CABLE SUPPORTS - OVERHEAD MOUNTED
Trapeze-type cable supports (Construction Guideline NCI-110) may also be used in spot-network vaults for network protector and/or service leads. All three phases MUST be threaded equally through each support to cancel the magnetic fields.

CABLE TRAYS
Aluminum cable trays may also be used in dry spot-network vaults. The trays may be supported from the wall, floor or ceiling depending upon the routing of the cables and the vault configuration. Their size will depend upon the number of conductors to be installed.

CABLE SPACING, PHASING AND ARRANGEMENT (Refer to Construction Guideline NCI-160)
When installing service cables, protector leads or bus ties on hangers or rack backs, three cables shall be grouped or bundled together -- one from each phase -- just as if they were installed in conduit. This configuration reduces magnetic fields and tends to balance the reactance in phase cables which, in turn, equalizes currents in each cable. Figures 1 through 6 show how the cables shall be grouped and the air space between groups. Every attempt should be made to group or bundle cables this way for the length of the run except if the run requires separating phases for current transformers.

It is essential that air spaces be left between each group of conductors to maintain the N.E.C. "in air" rating of the conductor. The air space should be a minimum of 1-1/2 times the diameter of the conductors. Each conductor must be secured to the support to prevent any movement during short circuit conditions.

Between supports, the air spaces on horizontal runs should be "filled" with vertical pieces of PVC conduit, cut to length, and held in place with cable ties. Install two spacers per air space between each support point (trapeze, hook, etc.) equally spaced apart and from supports.

METERING CURRENT TRANSFORMERS
When metering current transformers (C.T.'s) are installed inside the vault, the individual phase conductors MUST be bundled together into a cylindrical bundle, fed through the C.T.'s and then reshaped as before. No more than 10 feet, each side of the C.T.'s, should be used for the transition area. Refer to Construction Guideline NCI-160

ORIGINATOR	STANDARDS COORDINATOR	STANDARDS SUPERVISOR	UNIT DIRECTOR
Jim S. Horn	Charles L. Shaffer	John C. Skinner	Betty Robin

BENDING, TRAINING, RACKING AND RE-REELING OF UNDERGROUND PRIMARY CABLE

TRAINING AND RACKING OF CABLE

Safe minimum bending radius, cable creepage and splicing requirements must be considered when training and racking cables.

The locations of cables in manholes and vaults is determined by the ducts they occupy. The cables should always be fanned out from the duct mouth so they do not cross other ducts or cables. This allows access to other ducts for cable replacement and inspection. Allow from six to ten inches of straight cable, depending on size, out of the duct before starting the bend in the vault or manhole. Newly trained cable will tend to straighten out. If the bend is too near the duct mouth, it will spread into the duct which will eventually cause sheath damage at the duct edge.

When the bottom ducts are used, the splices will be made low on the side walls. If higher ducts are used first, the cable should be supported high enough as to leave a splicing area for the cable from other ducts. When splicing lead cable, enough straight cable between the duct mouth and splice must be left to move the lead sleeve clear of the splice area.

CABLE SUPPORTS

The most common type of cable support is a rack assembly consisting of a rackback bolted on the wall with slots where the steps can be attached. The steps vary in length. The spacing of the rackback is determined by the length of the splice and weight of the cable. The bottom mounting hole is offset for overlapping to allow two rackbacks to be combined as one unit.

Use tie wraps (shown on Stack Catalog page 73-40) to secure the cables to the rack steps.

The rackback spacing for supporting splices shall be as shown in the following table:

Splice Support Rackbacks

Type of Splice	Standard Rackback Spacing
5 kV	36”
13 kV	36”
27 kV	36”
34.5 kV	36"

Standard spacing is a minimum for design purposes and is to be increased only when other splices requiring a greater rackback spacing are to be racked on the same wall.

The Maximum Rackback Spacing for Cables NOT Having a Splice

Type and Size Cable	Spacing
1/C, 500 kcmil or LESS	48"
3/C, 1/0 or LESS	48"
1/C, 600 kcmil or MORE	48"
3/C, 2/0 or MORE	48"

The vertical spacing of the steps on the rackback will depend on the size of the splicing sleeves. A spacing of eight to ten inches is recommended.

Where wall supports cannot be installed, ceiling supports (Construction Guideline NCI-110) or support from the floor shall be installed. Floor supports may be either commercial cable trays or Unistrut type construction anchored to the floor. The cables shall be tied securely to the support with plastic cable ties or spool insulators.

ORIGINATOR	STANDARDS COORDINATOR	STANDARDS SUPERVISOR	UNIT DIRECTOR
Jim S. Horn	Charles L. Shaffer	[illegible]	[illegible]

CABLE BENDING RADIUS AND REEL DRUM SIZE

The type of insulation and size of cable will determine the safe bending radius. The following table gives recommended minimum bending radius. For low pressure oil or gas filled cable, follow that shown for solid type paper insulated cable.

DRUM DIAMETERS AND CABLE BENDING RADIUS

Note: Drum diameters and cable bending radii do not correlate.

Stock No.	Cable	Description	Voltage Class	Min. Drum Diameter, Inches	Min. Bending Radius, Inches
XLPE CABLES					
613212	#6 Cu	1/C	5 kV	9	8
613222	350 Cu	1/C	5 kV	17	14
613523	#1 Cu CR	3/C	15 kV	32	27
613520	2/0 Cu CCR	3/C	15 kV	34	29
613526	3/0 Cu CR	3/C	15 kV	36	30
613530	350 Cu CCR	3/C	15 kV	42	36
613531	500 Cu CS	3/C Compact Sect.	15 kV	40	35
613532	500 Cu CCR	3/C	15 kV	45	38
613533	750 Cu CS	3/C Compact Sect.	15 kV	45	38
613534	750 Cu CCR	3/C	15 kV	52	44
623650	#8 Cu	3 ea. 1/C Kerite triplexed w/2 ea. #8 neut.	28 kV	30	26
613540	#1 Cu	3/C w/ 3 neut.	28 kV	37	32
602025	1/0 Solid Al	2/C Concentric	28 kV	19	16
613613	350 Al CCR	1/C Drain wire	28 kV	26	19
613543	350 Cu CR	3/C w/ 3 neut.	28 kV	48	42
012099	350 Al CCR	1/C Flat Strap	28 kV	26	19
613615	500 Cu CCR	1/C Drain wire	28 kV	26	22
012100	500 Cu CCR	1/C Flat Strap	28 kV	26	22
613618	750 Cu CCR	1/C Drain wire	28 kV	29	24
012101	750 Cu CCR	1/C Flat Strap	28 kV	29	24
613619	1000 Cu CCR	1/C Drain wire	28 kV	31	26
012102	1000 Cu CCR	1/C Flat Strap	28 kV	31	26
623655	1000 Al CCR	1/C Tape Shield	35 KV, 420 mil	33	28
EPR CABLES					
623640	500 Cu CCR	1/C Tape Shield	15 kV	40	35
010128	500 Cu CCR	1/C Tape Shield	15 kV	40	35
623670	1000 Cu CR	3/C Flat Strap Triplex	15 kV	42	36

Minimum cable drum diameters shall be 14 times the cable diameter per ICEA A-9-428 (NEMA WE-6).
Minimum bending radius shall be 12 times the cable diameter per Okonite Engineering Bulletin EHB-81.

CR = Concentric Round (3% compressed)
CCR = Compact Concentric Round
CS = Compact Sector

Reference Standards: U4-3.5/NCI-130, "Creepage of Cable"
U1-4.11/NCI-60, “Cable Pulling, Installing Electrical Cables in Underground Conduit”
U4-3.6/NCI-70, “Duct Edge Protection"
E6-1/NGE-70, “Physical Properties of Underground Cables”

CABLE TAGGING AND PHASE MARKINGS

Identification tags are the primary means of identifying all cables in the field. In order that these tags may be relied upon, they shall be fastened to each cable immediately after the cable is pulled in. The tags, secured with tie straps, must be used on all 27 kV concentric neutral cables. Also, label customer's cables indicating the customer's side of the service termination point where the customer's cables terminate.

Tagging shall be as follows:

1. **Lettering on Yellow Plastic Tag:** The lettering shall be made with an Eagle "Marker 8835" felt-tip pen. Cables shall be identified by descriptions similar to the following examples:

   SUBSTATION GETAWAY: **F2634 LEG #3 TO V707** or **F2634 LEG #3 TO BUS B**
   PRIMARY FEEDER: **26CI23 LEG #3 TO V-707**
   PRIMARY DISTRIBUTION: **LEG #1 TO V-747**
   SECONDARY: **5161 S. CRESTON**

   Note: Only primary feeder cables are assigned identification numbers in the above. Example: 26C123.

2. **Attachment:** The tags shall be secured with plastic tie straps.

3. **Phase Markings** on new cables, primary and secondary, shall be made with bands of overlapping yellow plastic tape and placed around the appropriate cable jacket:

   Phase One: One band
   Phase Two: Two bands
   Phase Three: Three bands

4. **Location:** Tags should be placed at all duct mouths and, if possible, also at a location so they can be read from the ladder.

5. **Service Termination Point:** Place tags on customer's NEC cable on the customer's side of the service termination point in service termination facilities. SCL should never do work on equipment on the customer's side of the termination point. The label tag will typically read "customer owned." Examples of service termination points include

   Secondary spades on transformers on pads, in vaults, in handholes, and in fenced enclosures
   Multiple connectors in vaults, handholes, and terminal cans
   Bus bars in vaults and in cable-to-bus bar termination enclosures

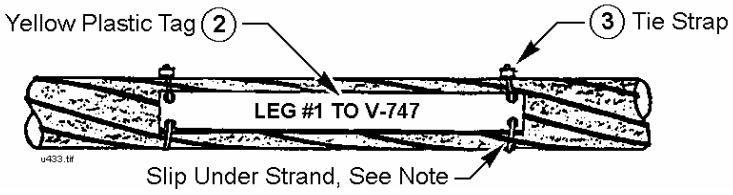

Slip plastic tie strap under one or two strands of the concentric neutral at each end.

6. **Material List**

Item	Quantity	Description	Stock No.	Material Standard
1	as required	TAPE, yellow marking	736776E	7367.5
2	as required	TAG, cable identification, yellow, plastic	735800E	–
3	as required	STRAP, TIE, adjustable plastic	735806E	7358.1

STANDARDS COORDINATOR	STANDARDS SUPERVISOR	UNIT DIRECTOR
Chris Detter	John Barnett	John Nierenberg

CREEPAGE OF CABLE

To restrain a cable by putting it in compression, a single or double-eye split grip as shown in Fig. 2 may be used. This method is feasible when the duct mouth is close to a side wall so that there is a straight section long enough to take the grip before the cable enters the duct. The grip is fastened to the wall by anchors. This method will give good results if the cable is at least one-half the diameter of the duct, so that snaking or excessive bending will not occur in the duct. The traction method can also be used. This requires no straight section out of duct. Assemble sock (grip) and slide down duct.

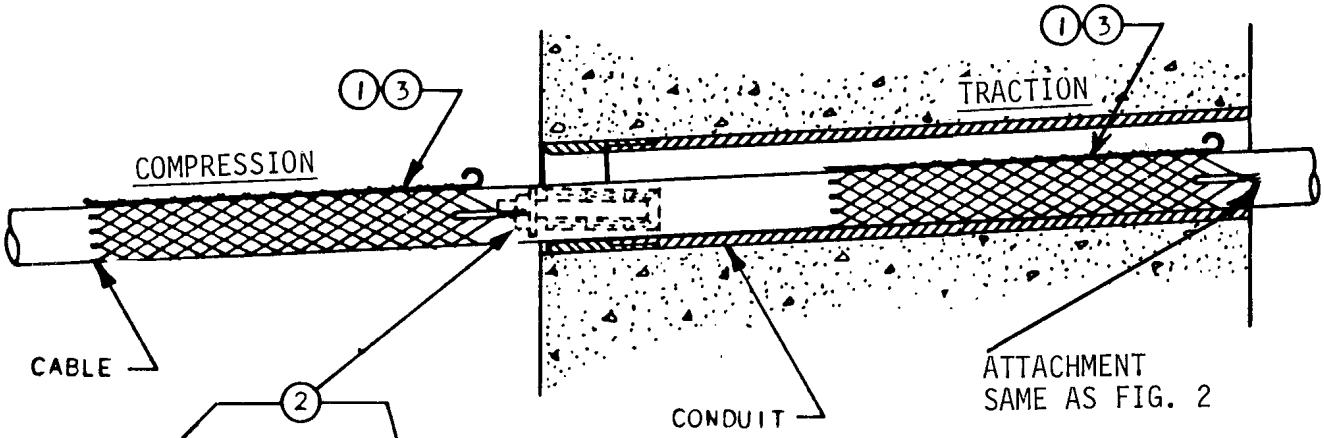

FIG. 1

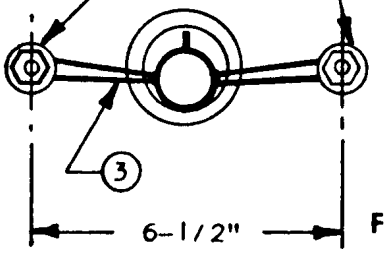

FIG. 2

780127

Item	Description	Stock No.	Matl. Std.
1	GRIP, Support & Riser, Single Eye	763550 to 763560	---
2	ANCHOR, 1/2" x 3-3/4" Stud Bolt **OR** Anchor Bolt & J-Bolt, Cable Support	780111E 780127	7800.9 ---
3	GRIP, Support & Riser, Double Eye	763543 to 763549	---

ORIGINATOR	STANDARDS COORDINATOR	STANDARDS SUPERVISOR	UNIT DIRECTOR
Jim S. Horn	Charles L. Shaffer	John C. Skinner	Betty Robin

DUCT EDGE PROTECTION

Most cable jacket failures at duct edges are the result of excessive wear due to the abrasion that takes place during expansion and contraction of the cable. This is especially true in older installations where the ducts have straight edges at cable entrance. In most of the new holes "end bells" are installed on the ducts, giving a rounded edge. However, even in these there may still be a concentrated point on the bell which will wear through the jacket or insulation.

To prevent such wear, install nylon cable protectors stocked in the following sizes:

Stock No.	Conduit Size
731800E	2” – 2-1/2”
731801E	3” – 5”

Reference Material Standard 7318.1

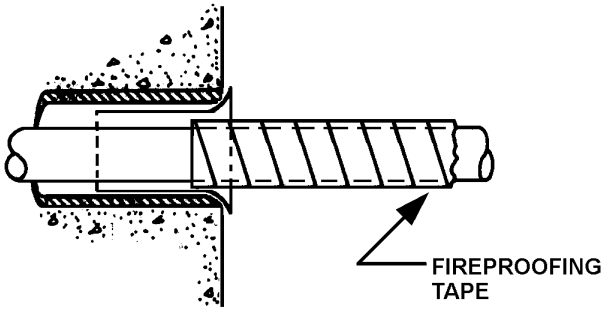

u436.tif

Squeeze it to size.....

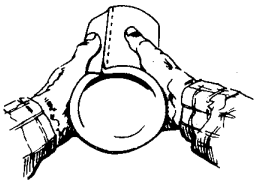

.....and insert.

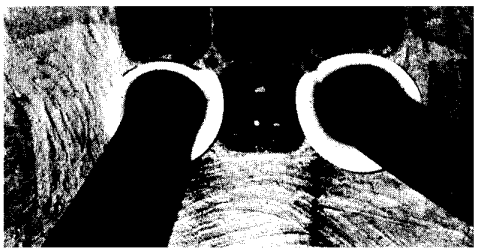

ORIGINATOR	STANDARDS COORDINATOR	STANDARDS SUPERVISOR	UNIT DIRECTOR
Jim S. Horn	Charles L. Shaffer	John Skinner	Hardie Frey

FIRE AND ELECTRIC ARC PROOFING OF CABLES

1. **Scope of Application:** The purpose of fire and electric arc proofing any electric cable is to limit damage resulting from cable faults to the adjacent cable. This protection is necessary only where the failure of one cable would result in the probable failure of other cables. Any cables within 18 of each other are considered to be exposed.

   When specified, primary cables on the network system shall be fire and electric arc proofed.

2. **Separation:** It is recommended that where possible and in addition to the application of fire and electric arc proofing tape, the cables be physically separated by a minimum of 12 inches.

3. **Application:** Fire and electric arc proofing tape (Stock No. 736525 or 736527, Material Standard 7365.2) shall be applied in two half-lapped layers, so that each cable is covered with a total of four layers of tape. Overlap the last 6 inches of protected cable when starting new roll of tape.

4. **Securing Band:** The wrapped fire and electric arc proofing tape shall be secured by a band, consisting of two layers (the second wrapped directly over the first) of glass cloth electrical tape (Stock No. 736632E).

5. **Tape Coverage:** Determine the quantity of tape required to cover cables with two half-lap wraps using the formula below or from the table:

Cable OD, in.	Tape Width, in.	Number of 20-Foot Rolls Needed to Cover 100 Feet of Cable with Two Half Lap Wraps, rolls
1	1-1/2	42
1-1/4	1-1/2	54
1-1/2	1-1/2	64
1-3/4	3	38
2	3	42
2-1/4	3	48
2-1/2	3	54
2-3/4	3	58
3	3	64
3-1/2	3	74
4	3	84
4-1/2	3	96

Formula:

$$\text{number of rolls of tape required} = \frac{2(C)\,(LC)}{(LT)\,(W)}$$

Where:
D = cable OD in inches
C = cable circumference ($C = \pi D$)
π = 3.14
LC = length of cable in inches
W = one-half width of tape in inches
LT = length of tape in inches

STANDARDS COORDINATOR	STANDARDS SUPERVISOR	UNIT DIRECTOR
Charles L. Shaffer	John G. Skinner	Hardev Juj

INSTALLATION OF SECONDARY BUS BAR

Notes:

A. Use special support (Stock No. 696836) for limited working space.

B. Do not use for new services outside of the Network area.

C. Use 2 bus bars per phase for 2000 amp.

D. Use 2 bus bars per phase for 3000 amp.

E. For copper cable and copper lugs, use silicon bronze bolts and hardware. For aluminum cable and lugs, use either aluminum or stainless steel bolt kits. See D14-4/NSV-20.

F. Cable limiters are used for most bus tie cables and secondary conductors.

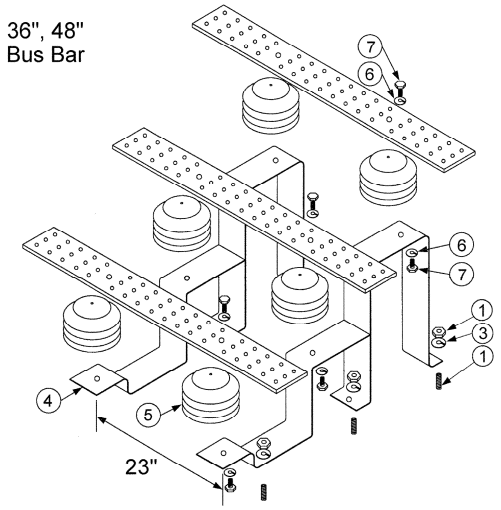

Material List

Item	Quantity by Bus Bar Length, in. 36	48	51	62-1/2	Description		Stock No.
1	6	6	12	9	ANCHOR, 1/2″-13 x 3-3/4″, SS Kwik Bolt		780141
2	18	18	36	27	CLOTH, varnished cambric, 5″x12″		735283E
3	6	6	12	9	WASHER, lock, 1/2″ galvanized		584255E
4	2	2	4	3	SUPPORT, secondary bus, insulators		696832
5	6	6	12	9	INSULATOR, bus bar support		690856
6	12	12	24	18	WASHER, split lock, 3/4″ silicon bronze		788127E
7	12	12	24	18	CAP SCREW, 3/4″x1-1/2″ hex, silicon bronze		784627E
8a	Note C				BUS BAR,	36″	679757
8b	Note C					48″	679760
8c	Note D					51″	679763
8d	Note D					62-1/2″	679764
10a	as required - see NTP-90				LIMITERS, Cu for Cu cable , **or**		683621 thru 683630
					LIMITERS, Al for Al cable		683637 thru 683659
10b	as required - see NTP-90				LUGS, Cu for Cu cable, **or**		677072E thru 677110
					LUGS, Al for Al cable		651267 thru 651295
10c	as required - see NTP-90				HEAT SHRINK TUBING		737451 thru 737604
11	see Note C				BOLT KITS, 1/2″ x 2″ stainless steel		782040
12	as required				RACKING MATERIALS (Stock Class 70)		–
13	as required				TAPE, friction, 3/4″		736400E
14	3 roll (RL)				TAPE, friction, 2″		736415
15	as required				VARNISH, insulating, quart		725471

standards coordinator	*standards manager*	*unit director*
John Shipek	John Shipek	Pamela S. Johnson

Installation Details

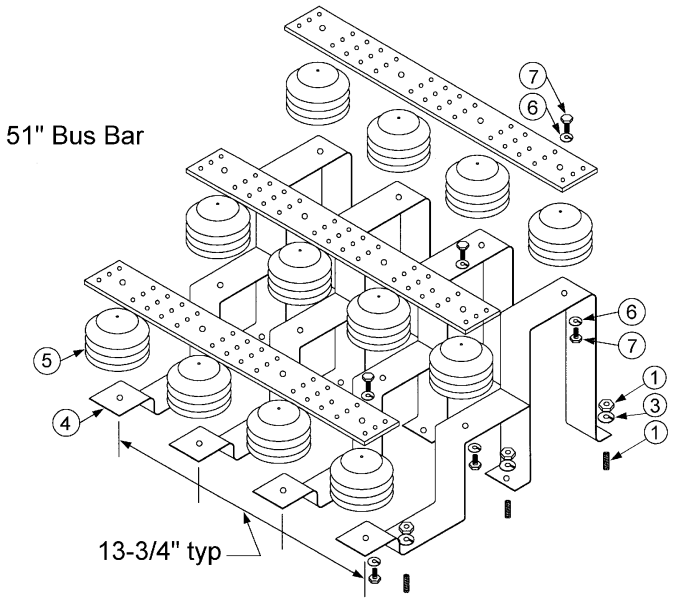

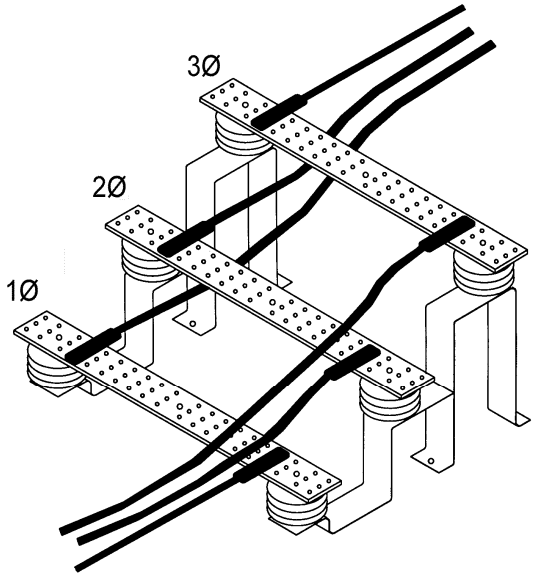

See note 11b

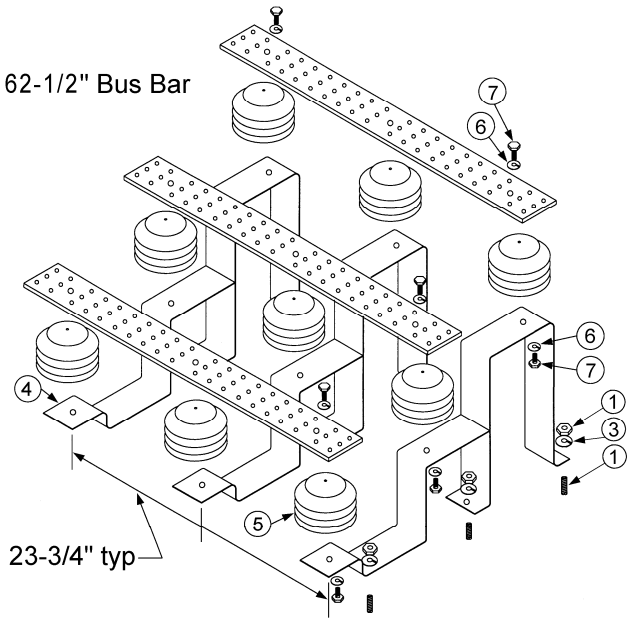

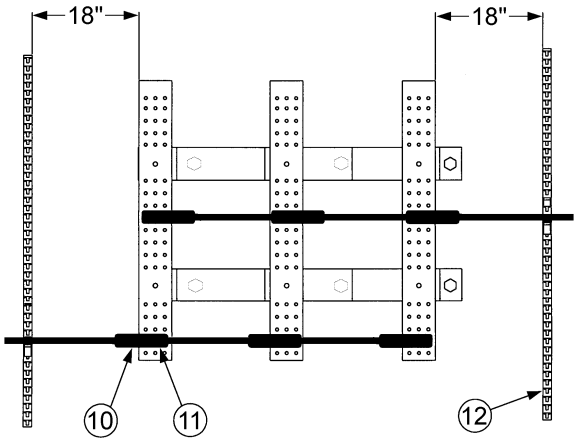

Installation Procedure

1. Locate and drill 1/2″ diameter anchor holes. Allow space for size of bus bar specified. See Note 9, below.

2. Mount supports (Stock No. 696832) using 1/2″ x 3-3/4″ stainless steel concrete anchors (Stock No. 780141) and 1/2″ galvanized lock washers (Stock No. 584255E). Do not tighten.

3. Install insulators (Stock No. 690856) to supports using 3/4″ x 1-1/2″ silicon bronze cap screws (Stock No. 784627E) and 3/4″ silicon bronze lock washers (Stock No. 788127E). Do not tighten.

4. Clean and install bus bars with three (3) pieces of 5″ x 12″ varnished cambric cloth (Stock No. 735283E) between the bus bars and the insulators using 3/4″ x 1-1/2″ silicon bronze cap screws (Stock No. 784627E) and silicon bronze lock washers (Stock No. 788127E). Tighten all bolts making sure there are no stresses in the insulators due to warped or misaligned parts.

5. Connect secondary cables.

6. Cover crimped connector end of limiters with heat shrink tubing.

7. Wrap all exposed bolts, bars and connectors with three layers of varnished cambric. Secure in place with 3/4″ wide friction tape (Stock No. 736400E).

8. Wrap with 2″ wide friction tape (Stock No. 736415) to seal all parts where moisture can enter. Completely cover the varnished cambric. Use a minimum of one half-lapped layer to provide a smooth base for insulating varnish.

9. Paint all taped surfaces with insulating varnish (Stock No. 725471) to make entire installation water-resistant.

10. Guidelines for positioning bus bars in manholes and vaults:

10a Bus bars should be installed so as not to block duct runs for pulling through.

10b The bottom of bus bars should be no less than 36″ from the floor and as high as possible, so the bars are at a proper working height for connections. The bars should be at least 6″ from the ceiling to leave room for splicing. Avoid heights where bus bars must be worked from ladders (sump pumps are required in bus bar vaults).

10c Bus bars should be placed vertically so cables can be brought in from both sides.

10d Bus Bars should be installed above waterline.

11. Cable training, racking and phasing:

11a All cables from one duct must be installed on the same position on each phase. Bus ties from one direction and parallel services should be back to back.

11b Cables shall be racked so that they traverse the bus bars over each phase position for that set.

11c Cable sets shall be racked together within 18″ of the closest bus bar.

11d Phasing shall start with Phase 1 on the bar closest to the wall and work out from the wall in order (1, 2, 3).

11e Bring in all cables from the direction of the bus bar that is furthest from the wall. This will avoid blocking access to the lower bars with the upper cables.

11f If installing cable to cable limiters, install as close to bus bars as possible.

University and First Hill Vaults, figures

Mole Bar Layout, section

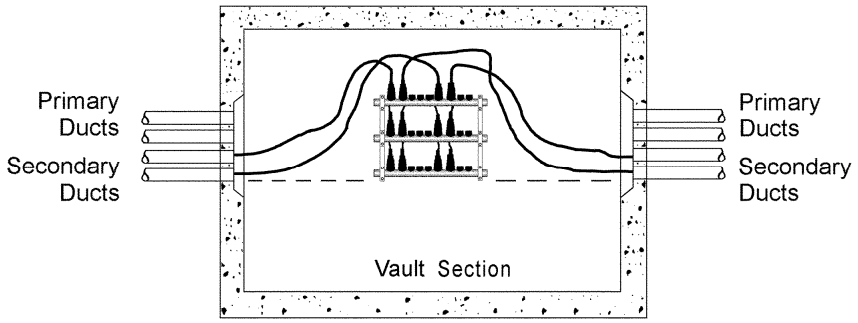

Mole Bare Layout, plan view

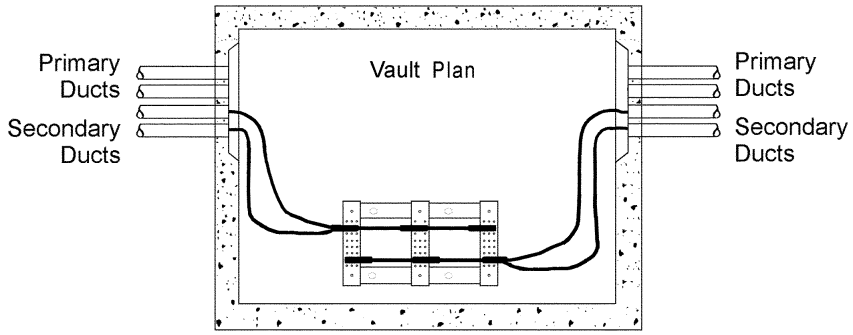

SPLICES AND TAPS, 600 VOLT, ALUMINUM TO ALUMINUM, ALUMINUM TO COPPER, COPPER TO COPPER

1. Straight Splice Copper to Copper

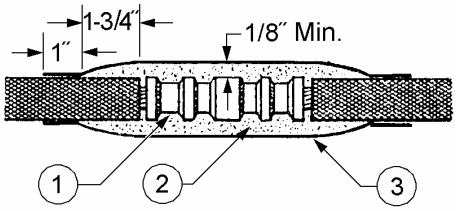

Stock No.	Matl. Std.	Conductor, AWG/kcmil	Tool and Die MD-6	Tool and Die Y35/39
677354E	6773.8	#6	–	U5CRT(2)
677355E	6773.8	#4	W161(2)	U4CRT(2)
677357E	6773.8	#2	W162(2)	U2CRT(2)
677358	6773.8	#1	–	U1CRT(2)
677359	6773.8	#1/0	W163(2)	U25CRT(2)
677360	6773.8	#2/0	W241(2)	U26CRT(2)
677361	6773.8	#3/0	W243(2)	U27CRT(2)
677362	6773.8	#4/0	W-BG(2)	U28CRT(2)
677363	6773.8	250	–	U29CRT(2)
677364	6773.8	300	–	U30CRT(2)
677365	6773.8	350	–	U31CRT(2)
677367	6773.8	500	–	U34CRT(2)
677371	6773.8	750	Y46*	P39CRT(2)*

* For connectors installed with Burndy type compression tools.

2. Straight Splice Aluminum to Aluminum

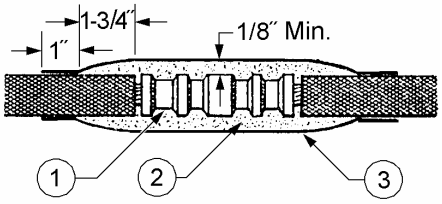

Stock No.	Matl. Std.	Conductor, AWG/kcmil	Tool and Die MD-6	Tool and Die Y35/39
650611	6774.1	500	U34ART(2)	U34ART(2)
650613	6774.1	750	–	P39ART(2)

3. Material List

Item	Description	Stock Number	Matl. Std.
1	CONNECTOR, aluminum compression (see connector details)	–	Burndy*
2	SEALANT, insulating	736470E	7364.70
3	TAPE, plastic, electrical	736655E	7366.5
4	COMPOUND, oxide inhibiting	726180	7261.8
5	CLEANER, electrical insulation	726157E	7261.5
6	HEAT SHRINKABLE SPLICE COVER	See below	7374.5

* These specifications are for connectors that are installed with Burndy type compression tools - to be used for contractors who do not have Anderson compression tools.

STANDARDS COORDINATOR	STANDARDS SUPERVISOR	UNIT DIRECTOR
Rick Rice	John Barnett	Richard Kent

4. Aluminum to Copper Reducing Splice

750 aluminum to 500 copper: Cut 18″ heat shrink cover from 48″ length or use 1-1/2″ – 12″ covers.

Stock No.	Al	Cu
650591	500	350
650593	750	500

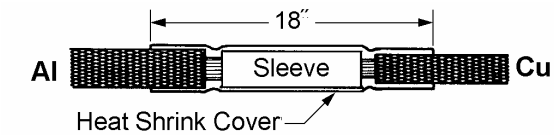

5. Straight Splice, Lead to XLP Cable

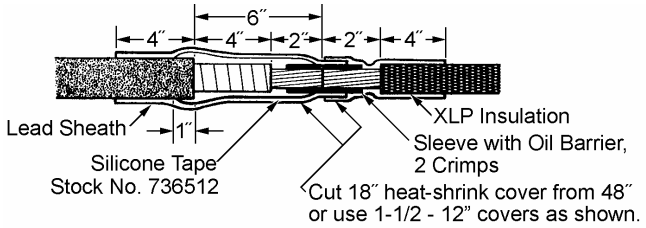

6. Lead Secondary Deadend

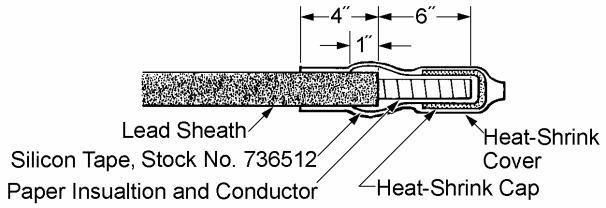

7. Heat-Shrink Tubing

City Light Material Standard 7374.5

	Connectors		Tubing			
			ID, in.			
Cable Size, AWG / kcmil	Cu	Al	Min. Expanded	Max. Recovered	Length, in.	Stock Number
1/0-4/0	0.51 - 0.69	0.906	1.10	0.37	9	737450E
250-500	0.75 - 1.06	1.125 - 1.32	1.50	0.50	12	737452E
750	–	1.59	2.00	0.75	12	737455E

8. Splicing Procedure

A Remove insulation as required. Do not nick the strands.

B Aluminum Conductors: Apply a small amount of oxide inhibiting compound (Item 4) to the bare strands and then brush with a wire brush parallel with the strands.

C Attach the compression connector using recommended tools and dies. After compressing, clean connector and adjacent insulation with electrical insulation cleaner (Item 5).

D Apply insulating sealant (Item 2), press firmly and form as shown in the illustrations. (Not needed for straight splices with heat-shrink).

E Apply 3 half-lapped layers of plastic insulating tape (Item 3). Do not stretch while applying. Use same tension used to remove the tape from the roll. For straight splices, heat shrink tubing may be used.

APPLICATION DATA FOR HEAT-SHRINKABLE SPLICE COVERS AND CABLE CAPS

1. Connector and Tubing List

Refer to Guideline U5-1.02/NCB-80 for splicing details.

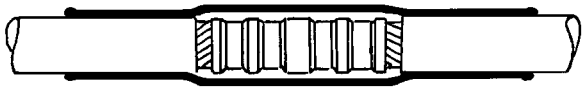

Splice Cover for Elimination of Taping

Cable Size 600 V Cable		Connectors			Tubing				
						ID, in.			
AWG / kcmil	OD, in.	Stock No.	OD, in.	Matl. Std.	Stock No.	Min. Expanded	Max. Recovered	Length, in.	Matl. Std.
Copper									
1/0-4/0	0.530 - 0.690	677359 to 677362	0.510 - 0.690	6773.8	737450E	1.10	0.37	9	7374.5
250-500	0.770 - 1.010	677363 to 677367	0.750 - 1.060	6773.8	737452E	1.50	0.50	12	7374.5
Aluminum									
1/0-4/0	0.580 - 0.684	650104E	0.906	6501.1	737450E	1.10	0.37	9	7374.5
350	0.879	650609	1.125	6774.1					
500	1.114	650611	1.320	6774.1	737452E	1.50	0.50	12	7374.5
750	1.340	650613	1.590	6774.1	737455E	2.00	0.75	12	7374.5

2. Cable Limiters

Limiters size 1/0 through 750 kcmil.

	ID, in.			
Stock No.	Min. Expanded	Max. Recovered	Length, in.	Matl. Std.
737456E	3.00	1.25	12	7374.5

3. Caps for Temporary Insulation of Cable Ends

	ID, in.		
Stock No.	Min. Expanded	Max. Recovered	Approximate Length, in.
737475E	0.79	0.36	2.2
737477E	1.37	0.70	3.5
737479E	2.17	1.00	5.7
737481E	4.70	2.76	5.7
737483E	3.94	1.77	6.4
737485E	2.87	1.26	6.7

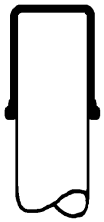

STANDARDS COORDINATOR	STANDARDS SUPERVISOR	UNIT DIRECTOR
Charles L. Shaffer	John Schimmer	Hardie Frey

SUBMERSIBLE MULTIPLE CONNECTOR INSTALLATION FOR ALUMINUM OR COPPER SECONDARY CABLE-TYPE USE

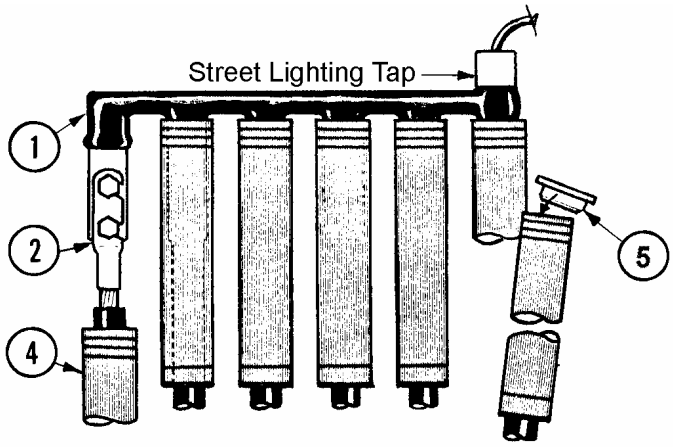

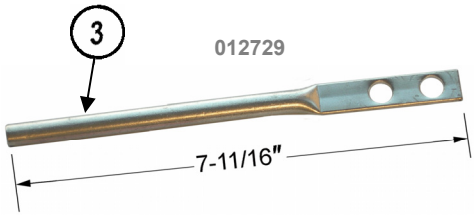

Material List

Item	Description			Stock Number
1	**CONNECTOR**, Multiple, 1000			
	3 position, #12 thru #4 (only) for streetlighting			678703
	3 position, #6 thru 500 kcmil, Al or Cu			678800
	4 position, #6 thru 500 kcmil, Al or Cu			678707
	6 position, #6 thru 500 kcmil, Al or Cu			678713
	8 position, #6 thru 500 kcmil, Al or Cu			678715
2	**TERMINAL LUG**, Compression, for insulated Al or Cu conductor sizes:	**Tool & Die (all sizes)**	**Crimps, No.**	
	#6	MD6, WK-840	4	678695E
	#4	MD6, WK-840	4	678697E
	#2	MD6, WK249	4	678692E
	#1	Y35-UK840	2	678693E
	1/0	Y35-W249	2	678694E
	2/0	T & B, Tx	4	678687E
	3/0	T & B, Tx	2	678696E
	4/0	Anderson VC-6	2	678689E
3	**TERMINAL LUG,** Extra Long Barrel for #2, str. Cu conductor for transformer ground	MD6, Wk-162	2	012729
4	**INSULATING SLEEVE**,			678620E
5	**SLEEVE FOR PLUG**			678618E

STANDARDS COORDINATOR	STANDARDS SUPERVISOR	UNIT DIRECTOR
John Hickman	John Barnett	John Nierenberg

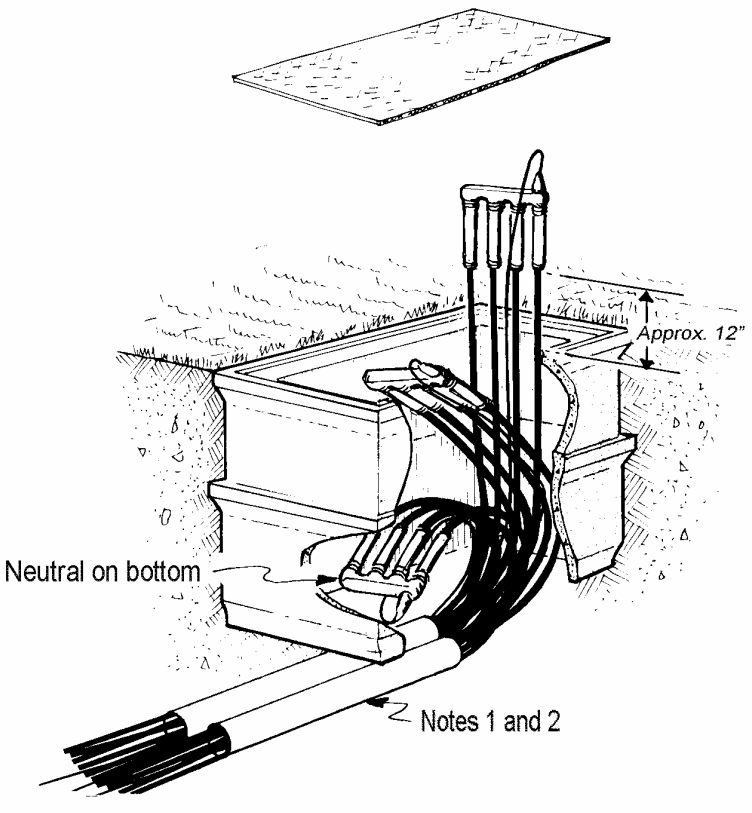

Notes:

1. For direct burial cables, sleeve the cables with 1' to 2' lengths of PVC Type direct burial conduit to protect the cable from possible abrasion from the edge of the handhole.

2. For cables in conduit systems, the conduit shall sweep or 90° bend to a point above the groundline in the bottom of the handhole.

3. All cables going to the same service or main shall be in the same position on each connector.

4. All unused positions on the connector bus shall be capped with an insulating sleeve.

5. All cables not connected to the connector bus shall be capped and plugged with an insulating sleeve and a sleeve plug, except, all service neutrals shall be connected to the connector bus and shall be covered with insulating sleeves.

6. Installation of the connector, terminals, sleeves, plugs and covers shall be per the manufacturers literature with particular attention to brushing aluminum conductors, application of oxide inhibiting compound and proper tool, die and crimping instructions.

7. Provide pigtails in handholes as follows;
   6' in 17"x28"
   8' in 2'x3'x3' and 4'x4'x4'.

8. See U2-13.1/NVH-50 for Handhole installation.

"J" BOX MOUNTING AND GROUNDING

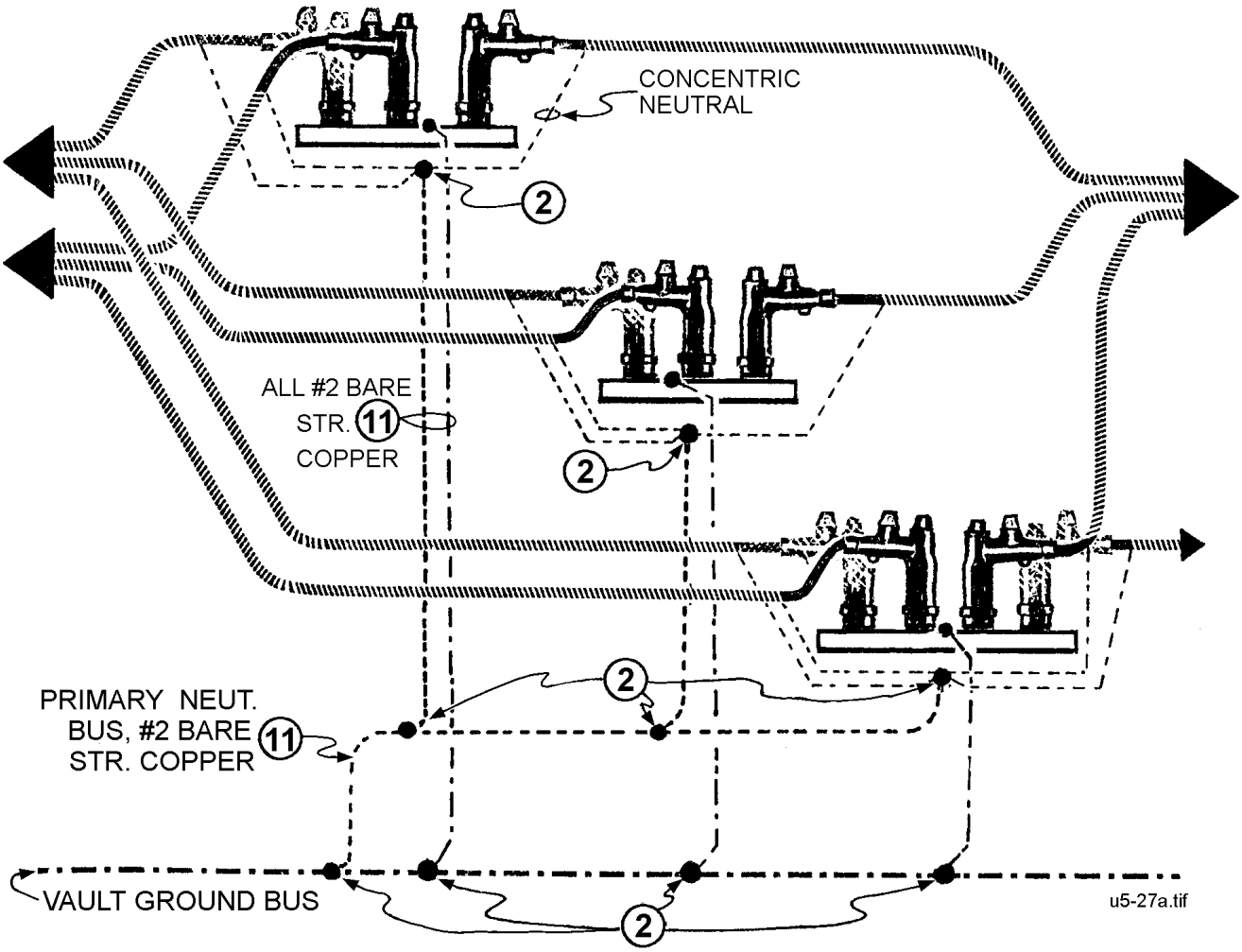

Each "J" Box to be grounded separately.

ORIGINATOR	STANDARDS COORDINATOR	STANDARDS SUPERVISOR	UNIT DIRECTOR
Jim S. Horn	Charles L. Shaffer	John Skinner	Betty Robin

"J" BOX MOUNTING AND GROUNDING

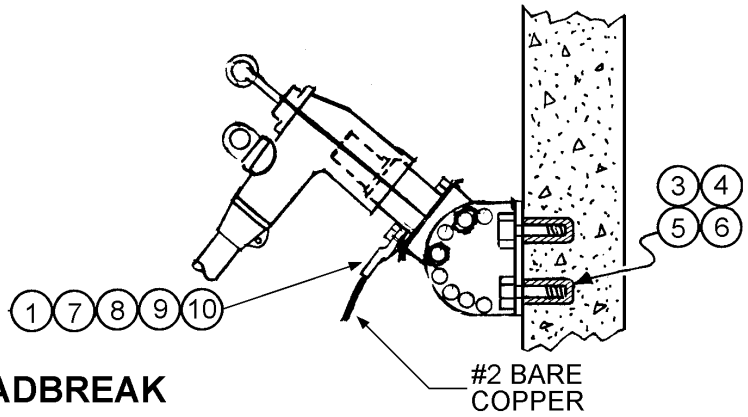

DEADBREAK

u5-27b.tif

LOADBREAK

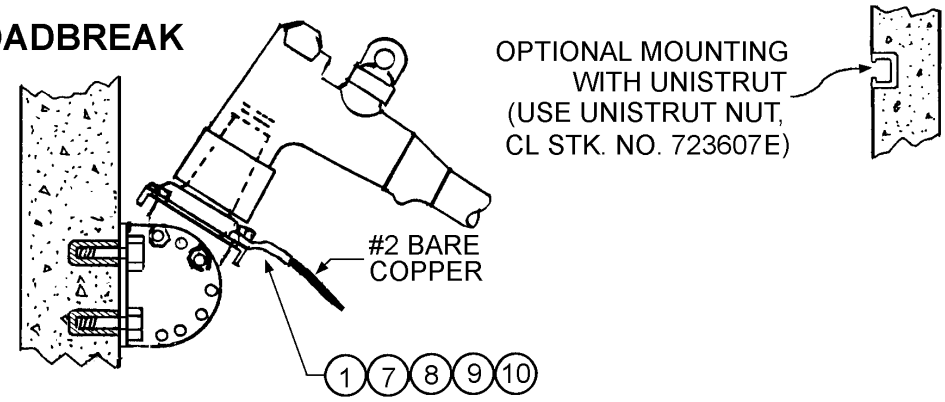

MATERIAL LIST

ITEM	DESCRIPTION		STK. NO.	MATL. STD.
1*	LUG, #2 Copper Compression		677071E	6770.7
2	TAP, Copper	#2 to #2 Cripmet	677326E	6773.5
		#2 to 2/0	669379E	6693.7
		#2 to #2 Split Bolt	668867E	6688.7
		#2 to 2/0 2-bolt	669379E	6693.7
3	BOLT, 1/2" x 1" Cad Plate		784825E	7847.1
4	ANCHOR, Concrete, 1/2", "Tamp-In"		780078E	7800.7
5	WASHER, 1/2" Lock, Galv.		584255E	5842.1
6	WASHER, 1/2" Flat, Galv		585025E	5847.1
7*	BOLT, 3/8" x 1" Silicon Bronze		784545E	7845.1
8*	NUT, 3/8" Silicon Bronze		783323E	7833.3
9*	WASHER, 3/8" Lock, Silicon Bronze		788123E	7880.2
10*	WASHER, 3/8" Lock, Silicon Bronze		788024E	7880.2
11	Wire, #2 Bare Stranded Copper, SD		610434	6103.9

*Supplied with some junction boxes.

PRIMARY CABLE PREPARATION, GENERAL

figure 1

1. Scope

This construction guideline provides basic instructions to prepare the end of a piece of primary cable for the installation of a cable accessory, such as an elbow, splice, or termination.

These instructions are general in nature - it is very important to read, understand, and follow the specific instructions that were provided with the cable accessory to be installed.

These instructions outline the steps for preparing 28 kV, 1/0 AWG aluminum, jacketed, round wire concentric neutral cable, Seattle City Light Stock Number 012098, for the installation of a silicone rubber termination. Different types of cable and accessories will require slightly different steps and/or tools.

Only qualified electrical workers shall prepare primary cable and install accessories.

The balance of this guideline is divided into nine sections:

- Getting Ready
- Removing the Outer Jacket
- Removing the Insulation
- Removing the Semi-Con Layer
- Cleaning
- Changing Blade in Speed Stripper
- Required and Optional Tools
- Required Material
- References

2. Work Procedure - Getting Ready

Before proceeding, visually inspect tool blades for sharpness and damage.

Spare blades may be obtained from the tool room.

Speed Systems 1542-2CL Speed Stripper tools contain a spare blade and an Allen wrench in a compartment on the tool.

Speed Systems 1542-2CL Speed Strippers can accept two different types of blades. The wedge blade is better at cutting cross-linked polyethylene (XLPE) insulated cable, the straight blade is better at cutting ethylene propylene rubber (EPR) insulated cable. Refer to Section 7, Changing Blade in Speed Stripper and Section 8, Required and Optional Tools.

2. Work Procedure - Getting Ready, continued

If the Speed Systems Model-1700 Series Adjustable Blade Scorer requires a new blade, return it to the tool room and exchange the entire tool for a new one.

When determining strip back dimensions, remember to take "lug growth" into account. Refer to the following table for aluminum lug growth allowances:

Conductor Size, AWG/kcmil	Growth Allowance, in.
#2 - 350	1/4
400 - 650	3/8
750 - 1000	1/2

Cut back length is calculated as follows:

cut back length = connector depth + lug growth + 1/8″

Cable cut back prepared to receive lug.

For aluminum conductors always brush prior to installing lug.

For copper conductors, brush if needed.

figure 2a

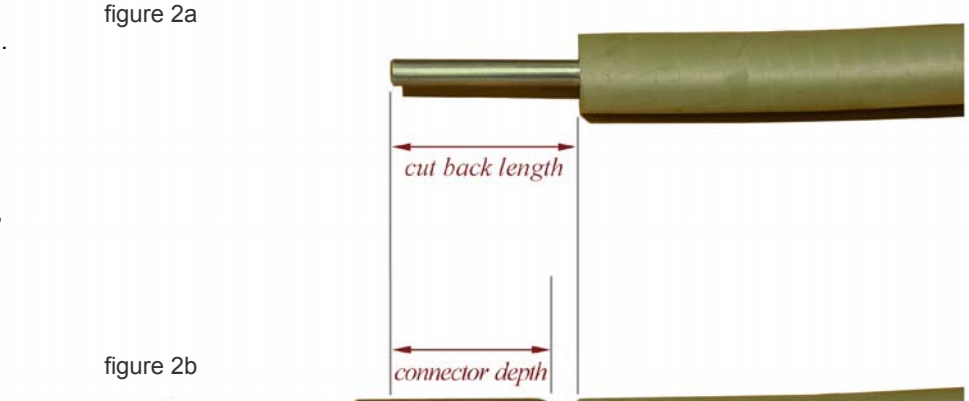

During the crimping process, aluminum lugs grow in length when crimped and this growth needs to be taken into account. Bi-metallic lugs should be treated as aluminum. Allowances for growth do not need to be made for copper lugs.

figure 2b

After the crimping process is completed approximately 1/8 inch should remain between the lug and the end of the cable insulation.

Wipe off excess oxide inhibitor.

figure 2c

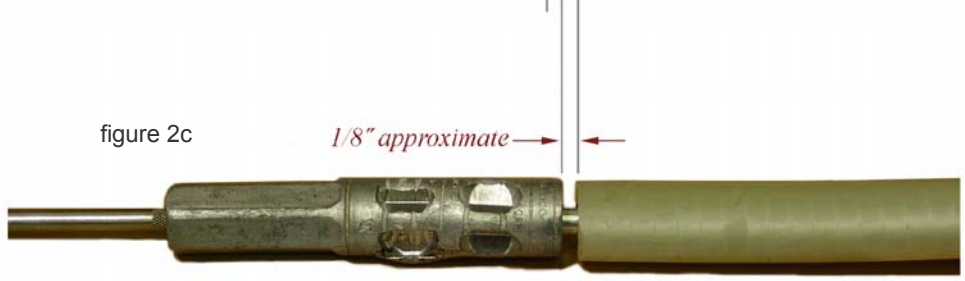

3. Work Procedure - Removing the Outer Jacket

Cable end with jacket in place.

figure 3a

Measure and mark the length of the outer jacket to be removed according to the instructions provided with the cable accessory.

figure 3b

Caution: If a knife is used for marking, be careful to not damage the underlying material.

Note: Using tape to mark the outer jacket may interfere with the operation of the scorer tool.

figure 3c

3. Work Procedure - Removing the Outer Jacket, continued

Remove the outer jacket by using the Model-1700 Series Adjustable Blade Scorer to make a square cut at the point marked.

Note: Make sure the blade lever is in the square cut position.

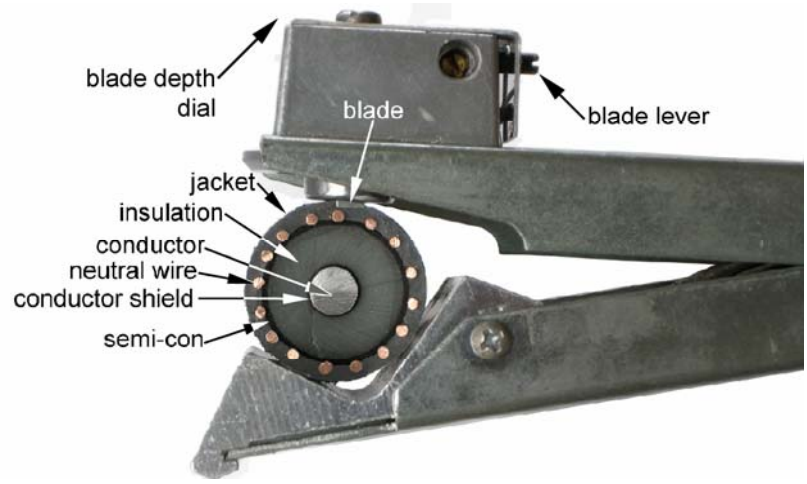

figure 3d

Set the scorer's blade depth with the dial so that the blade does not cut completely through the jacket and nick any of the neutral wires. For the Model-1700 Series Adjustable Blade Scorer, start with a dial setting of **40** and check results.

Once the blade depth is set correctly, open the jaws of the scorer by turning the black knob counter-clockwise.

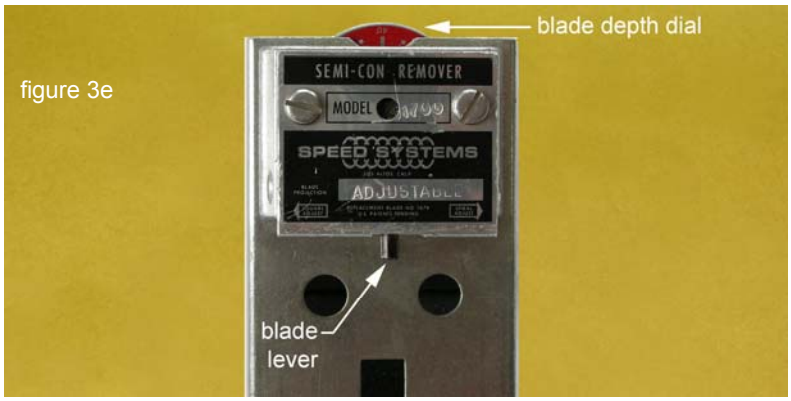

figure 3e

Set the scorer on the cable and release the tension in the jaws by turning the black knob clockwise until it turns freely.

Make several revolutions with the scorer.

Open the scorer jaws and remove it from the cable.

figure 3f

3. Work Procedure - Removing the Outer Jacket, continued

With a knife, make a small cut on either side of one neutral wire at the end of the cable.

figure 3g

With a pair of pliers, pull back the end of one neutral wire about 1-1/2 inches.

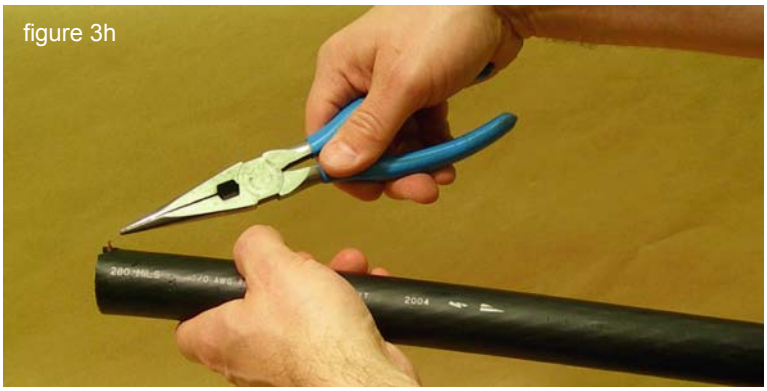
figure 3h

figure 3i

Insert the neutral wire into the center hole of the Speed Systems Model NW-15 Neutral Winder.

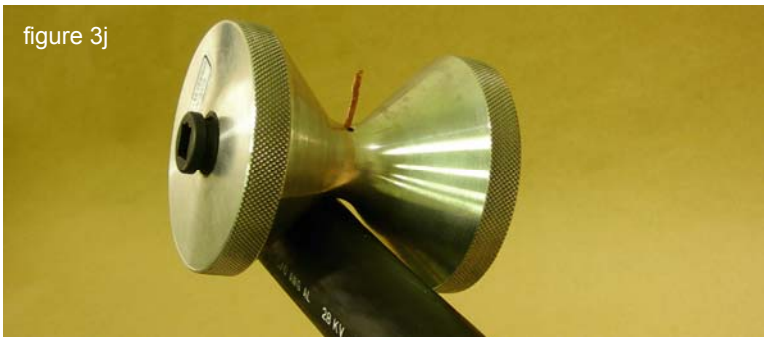
figure 3j

3. Work Procedure - Removing the Outer Jacket, continued

Cut the cable jacket by ratcheting the tool down and around the cable until the neutral wire reaches the square cut.

Note: Using the neutral winder tool preserves the neutral wire from accidental breakage.

Unwind and remove the neutral wire from the neutral winder tool.

figure 3k

Remove the outer jacket.

figure 3l

Pull the rest of the concentric neutral wires out of the way.

figure 3m

Cable end readied for next step.

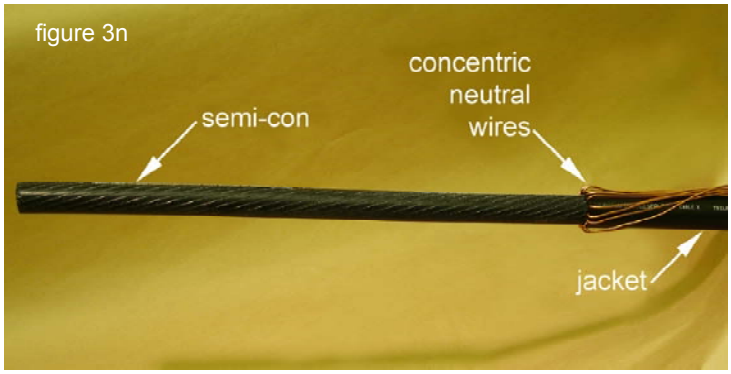

figure 3n

4. Work Procedure - Removing the Insulation

Measure and mark the Cut Back Length on the exposed semi-con surface according to the instructions provided with the cable accessory or the requirements of the compression lug. This mark indicates the section of three layers to be removed down to the conductor.

Note: When measuring, remember to take lug growth into account. Refer to Section 2 for getting ready.

Note: Removing the insulation before the semi-con layer minimizes the chance of damaging the insulation with the stripper tool while removing the insulation or contaminating the insulation by handling it.

figure 4a

Verify 1542-2CL stripper is fitted with the correct blade for the type or insulation being cut. Refer to section 8, Required and Optional Tools.

Place the 1542-2CL Speed Stripper onto the end of the cable and clamp the jaws firmly together.

Lock the jaws in place with the lock screw.

Set the stripper's blade depth so that it misses the main conductor by about 1/16th of an inch.

Note: With the blade lever set to the square cut position, rotate the tool around the cable 360 degrees before cutting the insulation to insure that the blade does not nick the conductor at any point around the revolution.

figure 4b

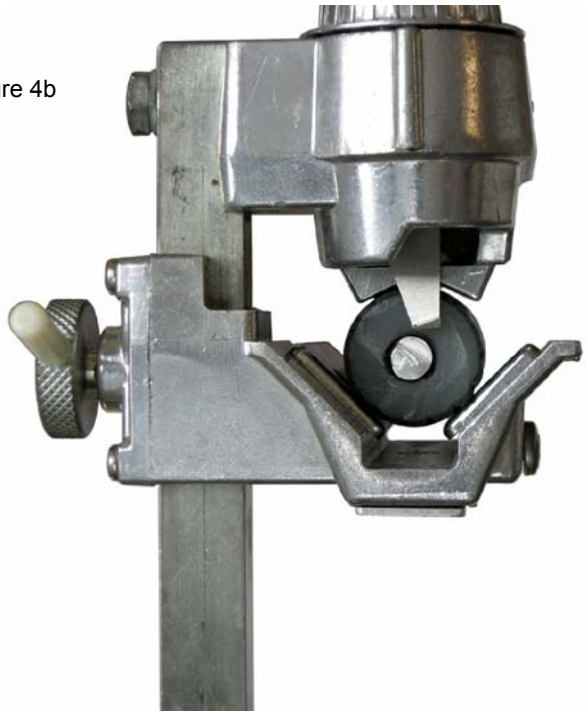

4. Work Procedure - Removing the Insulation, continued

After the correct blade depth has been verified, set the blade angle with the blade lever at the back of the stripper.

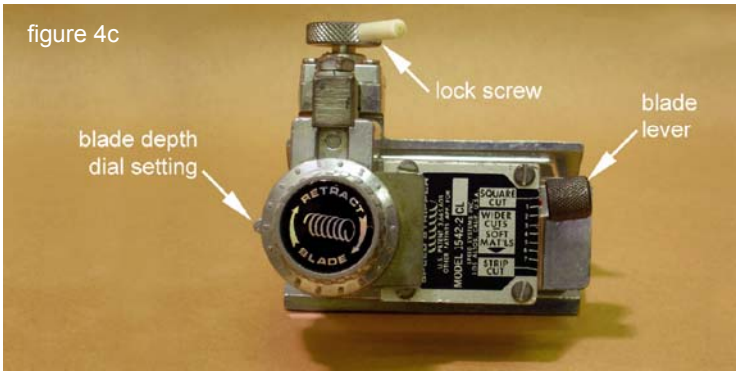

figure 4c

Suggestion: Start with a spiral cut width of approximately 1/4 inch. For the 1542-2CL Speed Stripper, start with a lever setting of **5** and check results.

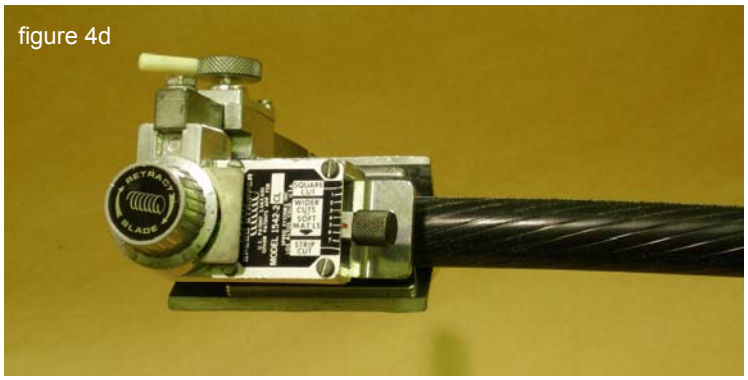
figure 4d

Spiral the tool down the cable.

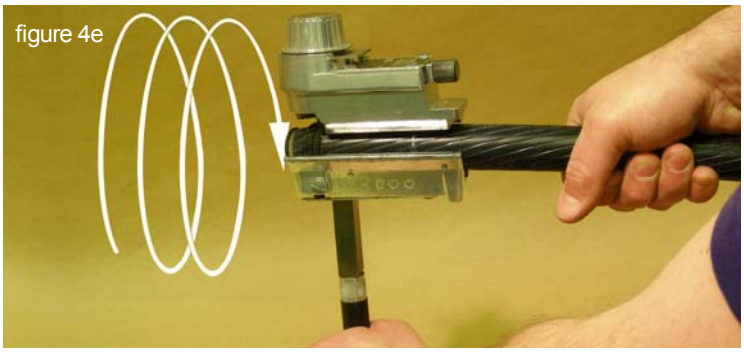
figure 4e

Move the stripper's blade lever to the square cut position at the point where the insulation needs to be squared off.

Open the stripper's jaws and remove the tool and the cut insulation from the cable.

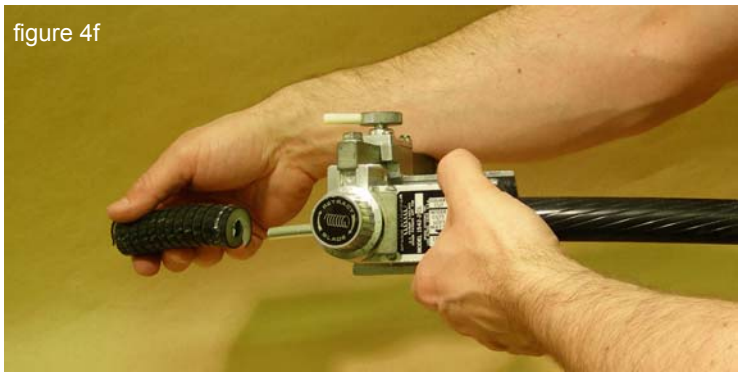
figure 4f

4. Work Procedure - Removing the Insulation, continued

Note: The Speed Systems 1646X Scale Gauge is an optional accessory that simplifies the task of removing the correct length of insulation.

The accessory kit includes a rigid angled gauge bar with an embossed scale and a lock screw for securing the gauge bar at the desired insulation stripback length.

To install, remove the 10-32 x ¼" screw located at the front edge of the stripper's saddle and replace it with the lock screw as shown. The scale should be read at the front edge of the saddle. The indicated dimension is the distance between the (rear) edge of the cutting blade and the angled end of the gauge (X in figure 4g).

Once the desired insulation stripback dimension is set on the scale gauge and the lock screw is secured, follow normal procedure for setting blade depth and spiral cut.

figure 4g

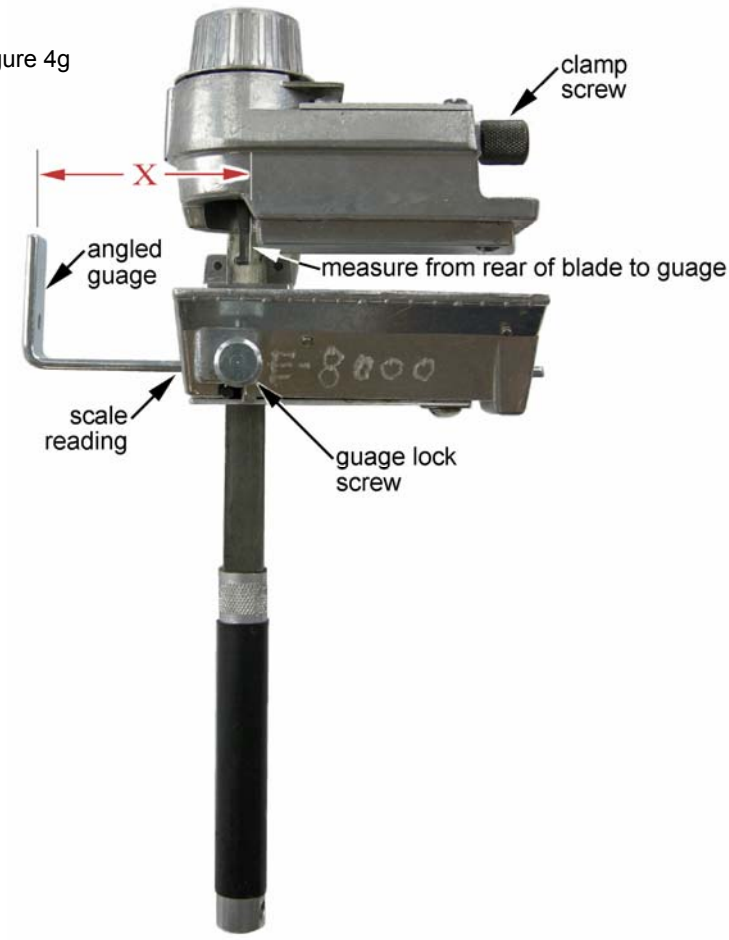

After three or four spirals, cut off the loosened insulation so that it does not obstruct the angled part of the gauge. The exposed conductor butts against the gauge angle during the final spiral cut and a clean square cut is made **without** resetting the clamp screw to the square cut position.

figure 4h

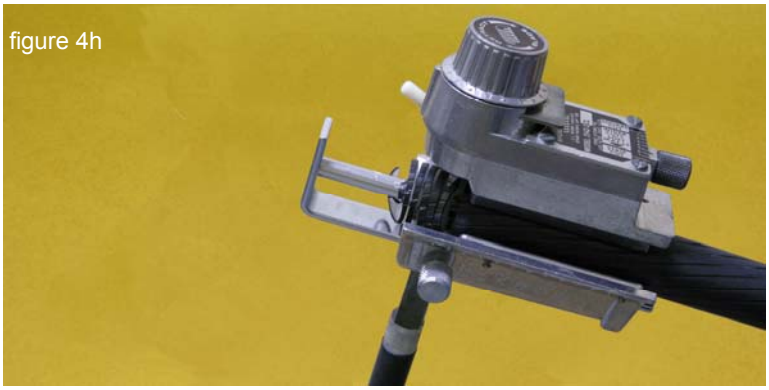

5. Work Procedure - Removing the Semi-Con Layer

Measure and mark the stripback length of the semi-con layer according to the instructions provided with the cable accessory.

Caution: If a knife is used for marking, be careful to not cut into the underlying insulation.

figure 5a

Set the depth of the Model-1700 scorer's blade so that it does not cut through the semi-con layer. This can be accomplished by setting the tool's blade lever to the square cut position and setting the blade by sight to about 0.003 to 0.005 inches (3 to 5 mils) less than the thickness of the semi-con.

For the Model-1700 Series Adjustable Blade Scorer, start with a dial setting of **20** and check results.

Caution: Verify the scorer's blade depth on a scrap piece of cable before proceeding to insure that the blade does not nick the insulation at any point around the revolution.

figure 5b

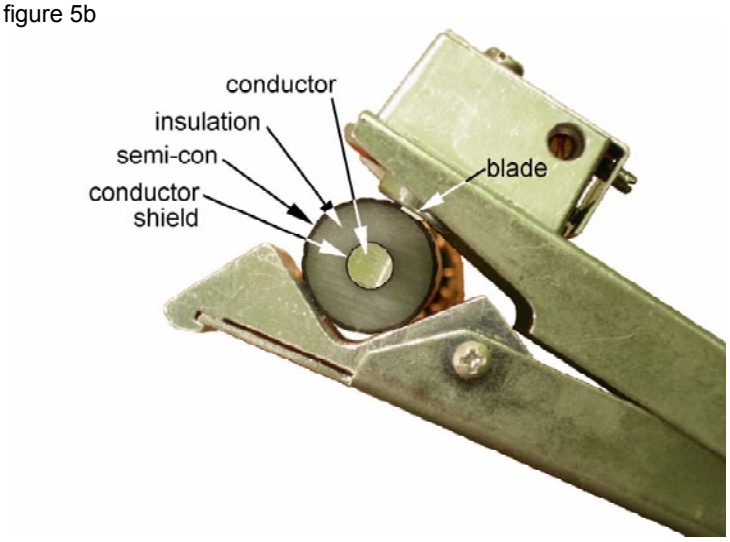

Note: Before proceeding, make sure the cable is as straight as possible.

Place the scorer at the point marked earlier and release the tension in the jaws.

Revolve the tool around the cable counter-clockwise facing the cable end to make a square cut.

figure 5c

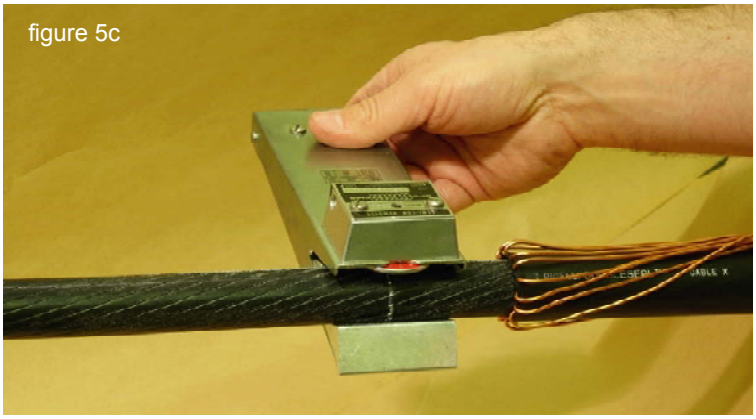

5. Work Procedure - Removing the Semi-Con Layer, continued

Switch the blade lever to the spiral cut position.

Revolve the tool around the cable to the end of the semi-con.

Open the jaws and remove the scorer from the cable.

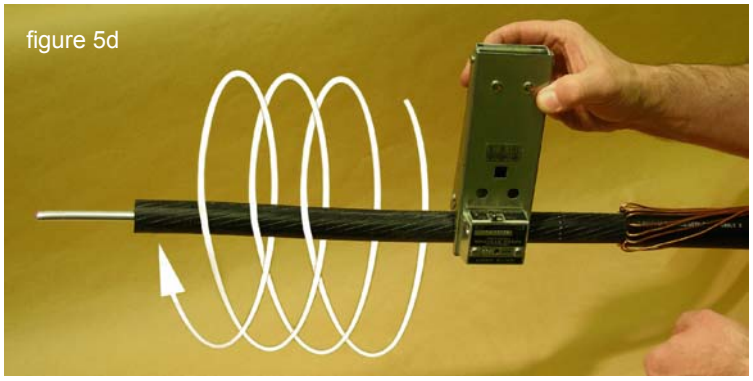
figure 5d

With a knife, lift the edge of the semi-con.

figure 5e

Grab the layer with a set of duck-bill or needle-nose pliers.

figure 5f

Roll (or pull) the semi-con off the insulation until the square cut is reached.

Note: Take care not to lift any portion of the remaining semi-con past the square cut.

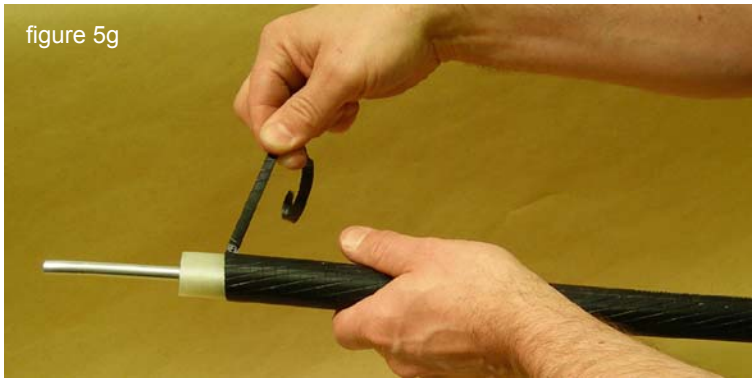
figure 5g

5. Work Procedure - Removing the Semi-Con Layer, continued

After the semi-con is removed, a spiral pattern on the surface of the insulation may be seen.

figure 5h

Verify the spiral pattern in the insulation is just a "shadow" and not a nick by dragging a thumbnail across the pattern. Shadow is the stress mark created at the score location when the semi-con layer is peeled off.

figure 5i

Routine sanding is optional.

If sanding is preformed, smooth insulation with a strip of 150 grit, aluminum oxide, abrasive cloth with a shoe-shining motion.

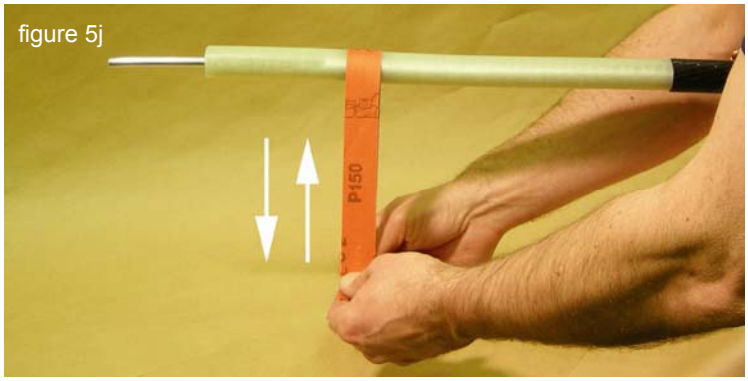

figure 5j

Note: Do not sand longwise (parallel to the conductor).

Note: Use only approved abrasive cloth; do not substitute.

Note: Do not use silicon grease to fill nicks.

Note: Cut the cable end off and start over from the beginning, if:

- Nicks cannot be sanded out, or
- A radial ring cut is present, or
- Sanding results in the insulation thickness going below minimum industry and SCL standards

5. Work Procedure - Removing the Semi-Con Layer, continued

Caution: Knife nicks in the insulation are the most common cause of cable failure. Nicks in the insulation that are parallel to the conductor reduce a cable accessory's dielectric strength and can directly lead to accessory failure.

Note: Do not pencil or bevel the insulation at the end of the cable unless directed to by the cable accessory instructions.

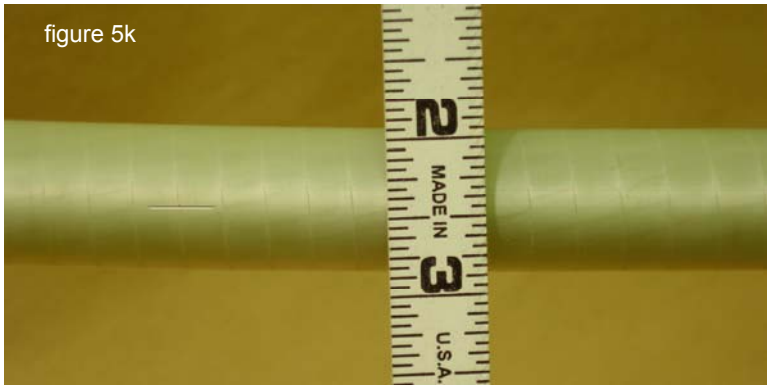

figure 5k

6. Work Procedure - Cleaning

Finish cable preparation by cleaning the insulation with electrical insulation cleaner.

Note: Use only approved electrical insulation cleaner; do not substitute.

Note: To avoid dragging (conductive) semi-con particles onto the insulation, always wipe from the end of the insulation towards the semi-con.

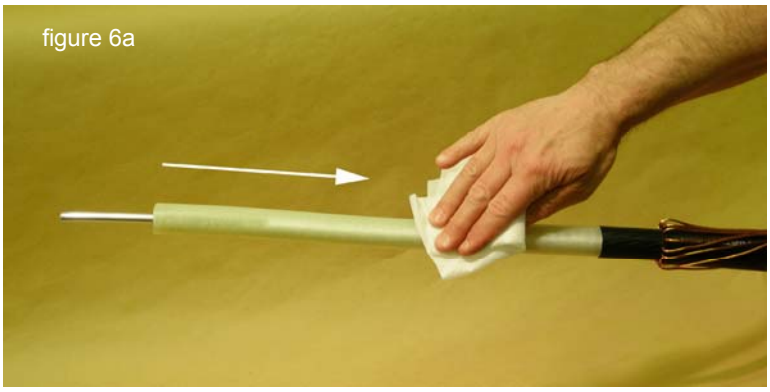
figure 6a

Note: Do not wipe the exposed semi-con layer with electrical insulation cleaner.

Note: Do not pour electrical insulation cleaner directly onto cable.

To speed evaporation, wipe insulation surface with a dry, lint-free wipe.

figure 6b

7. Work Procedure – Changing Blade In Speed Stripper

Follow these instructions to change the blade in a Speed Systems 1542-2CL Speed Stripper.

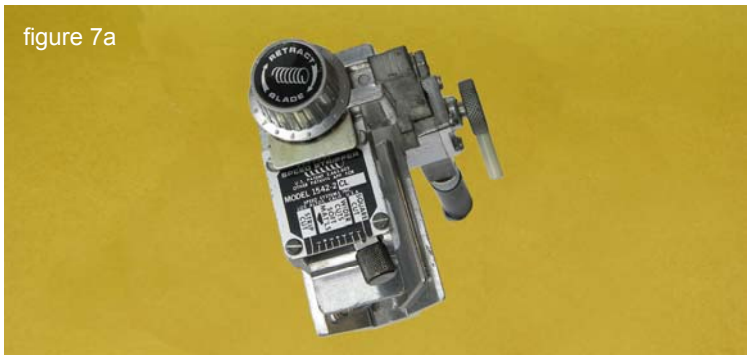

figure 7a

Remove blade depth setting knob keeper by inserting a screw driver or the Allen wrench provided with tool into slot and leveraging it out.

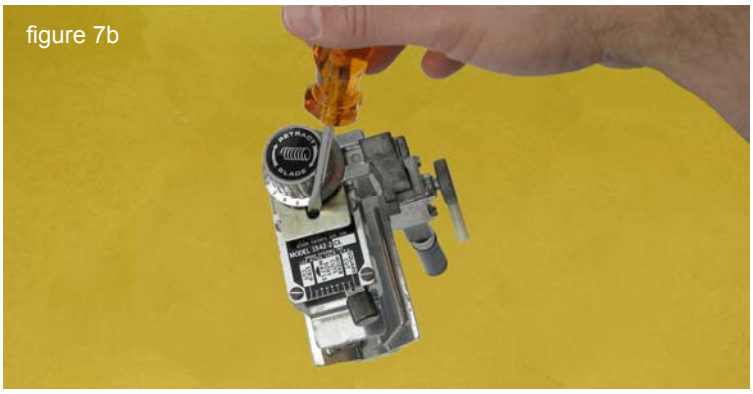

figure 7b

Remove keeper.

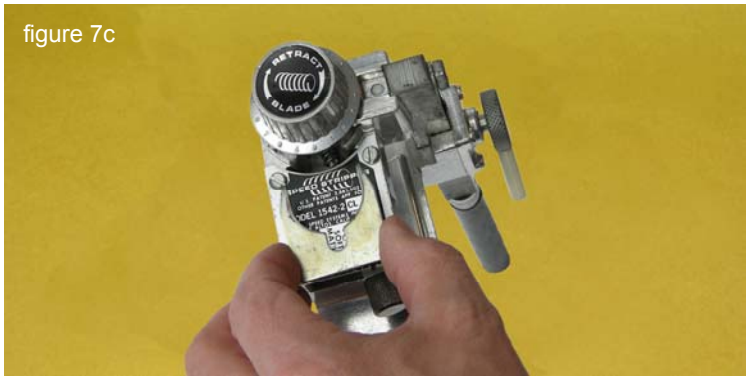

figure 7c

Expose unsecured blade depth setting knob.

figure 7d

7. Work Procedure – Changing Blade In Speed Stripper, continued

Remove blade depth setting knob assembly.

figure 7e

Use Allen wrench provided with the Speed Systems tool to loosen blade set screw.

figure 7f

Remove blade and replace with new blade of same type or a blade of another type.

Reverse instructions to reassemble the tool.

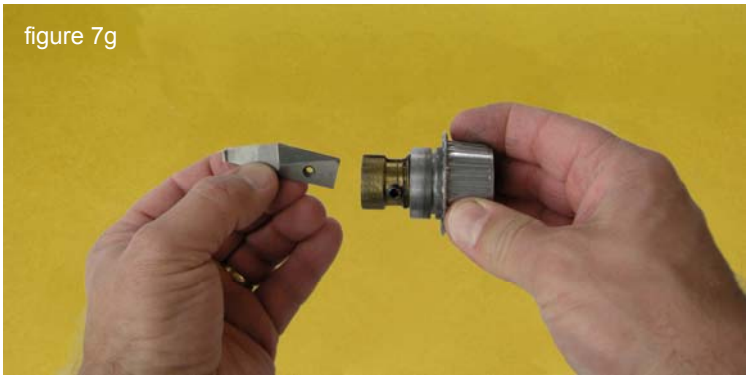
figure 7g

8. Required and Optional Tools

Speed Systems Model NW-15 Neutral Winder, for cable outside diameters 1.0 to 2.5 inches - suitable for 28 kV, jacketed, 1/0 solid aluminum cable

figure 8a

Speed Systems Model LPW1525/TK120X-N Probe Installation Tool with Tor-Key and Neutral Winder Option - suitable for 28 kV, jacketed, 1/0 solid aluminum cable – alternant to Speed Systems Model NW-15 Neutral Winder tool.

figure 8b

Speed Systems Model-1700 Series Adjustable Blade Scorer, for cable outside diameters 0.5 to 2.0 inches - suitable for 28 kV, jacketed, 1/0 solid aluminum cable (shown).

The Speed Systems Model-1700 SS includes a dial locking set screw (not shown).

The Model-1800 Series Scorer, for cable outside diameters 1.75 to 3.0 inches (not shown).

figure 8c

Speed Systems 1542-2CL Speed Stripper, for cable outside diameters 0.5 to 1.75 inches - suitable for 28 kV, jacketed, 1/0 solid aluminum cable (shown with optional Scale Gauge Accessory).

Tool is provided with 1562 wedge blade installed and a 1581 straight blade in the spare compartment. The spare compartment also contains a 1/8-inch Allen wrench.

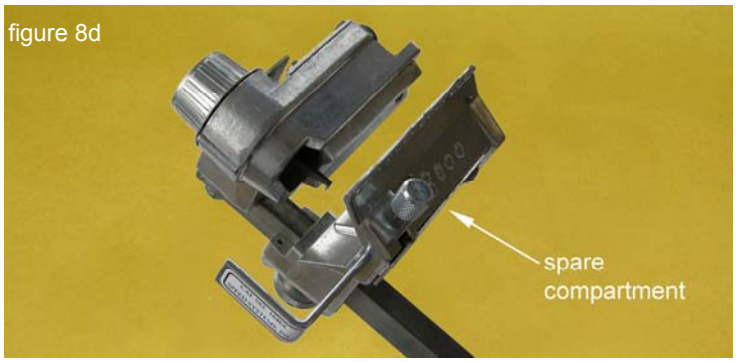

figure 8d

8. Required and Optional Tools, continued

Speed Systems 1562 wedge blade for use with 1542-2CL Speed Strippers. Wedge blades are optimized for cutting cross-linked polyethylene (XLPE) insulated cable.

figure 8e

Speed Systems 1581 straight blade use with 1542-2CL Speed Strippers. Straight blades are optimized for cutting ethylene propylene rubber (EPR) insulated cable.

figure 8f

Speed Systems 1646X Scale Gauge Accessory (with lock screw), for use with Speed Systems 1542-2CL Speed Stripper tool (optional)

figure 8g

Skinning knife, Stock Number 764220

Duck-bill, needle-nose, or Speed Systems semi-con roller grip pliers number SC-13

Folding wood rule, Stock Number 764998 or 764999

9. Required Material

Electrical insulation cleaner, wipe in sealed pouch, Stock Number 726157

figure 9a

Electrical insulation cleaner, quart bottle, Stock Number 726163 (alternate to 726157)

Electrical insulation cleaner, five gallon pail, Stock Number 726158 (alternate to 726157)

Dry, lint-free wipes

150 grit, aluminum oxide, one-inch wide, abrasive cloth, Stock Number 722344

10. References

Seattle City Light Construction Guideline E6-1.0/NGE-70 – *Properties of Medium Voltage Cable*

3M Corporation, Instruction Sheet, *QT-III Cold Shrink Silicon Rubber Termination, #78-8119-6027-3(B)*, Issued 02/10/97

Speed Systems product catalog

www.spdsystems.com

600 AMP PRIMARY CONNECTORS AND CABLE MOUNTING METHODS

Method 1 for Securing Cable and Connectors

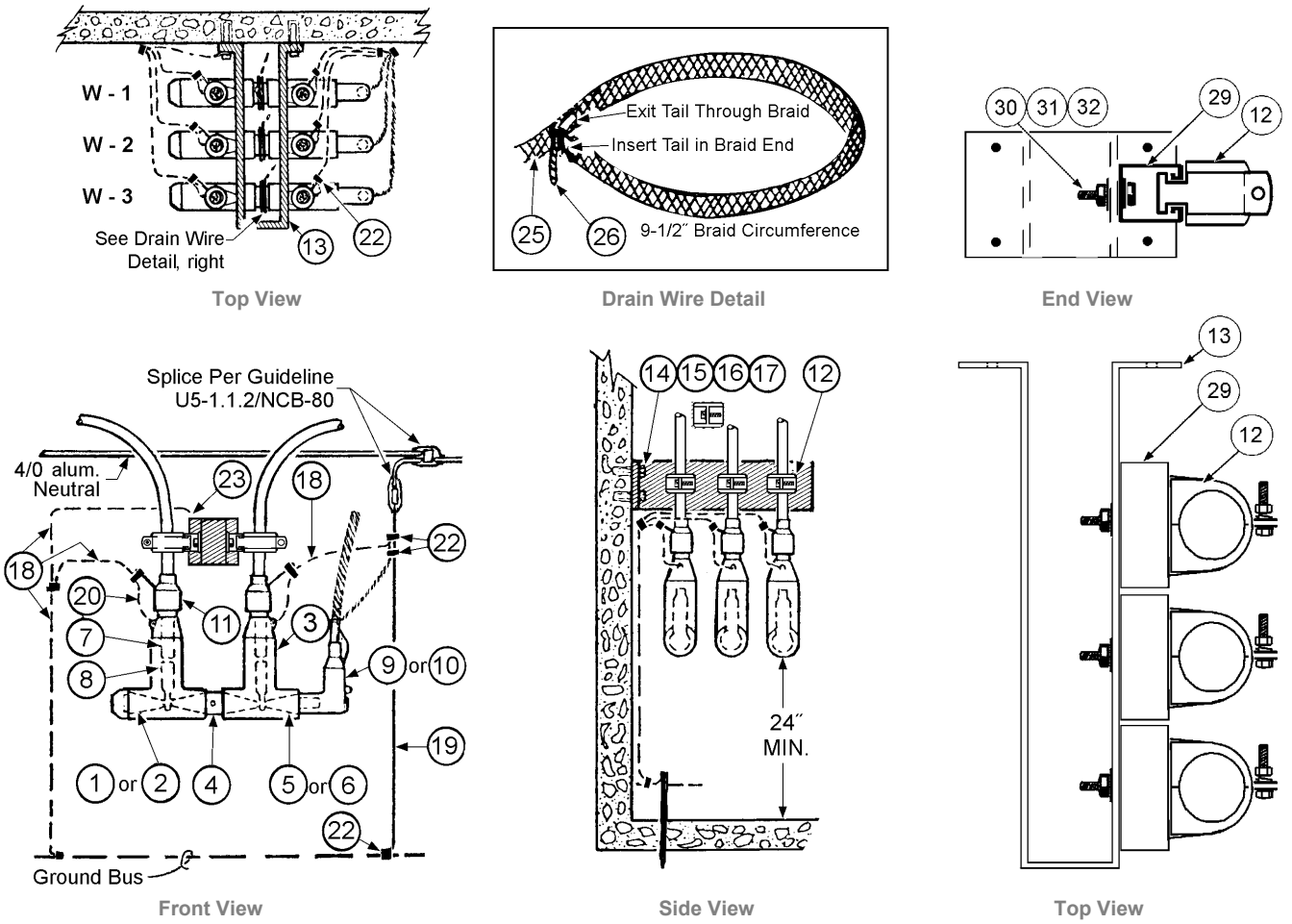

Figure 1 – Method 1 for Securing Cable Typical L7 Configuration

Figure 2 – Method 1, Detail

For securing cable and connectors using **Method 1** (shown above), the cable, mounted in a cable support assembly (Item 12) with the attached adapter (item 29), are screwed to a “U” shaped bracket (Item 13) that is secured to the wall. See figure 2, above. To attach the adapter to the “U” shaped bracket use a screw, washers and a nut (Items 14, 15, 16, and 17).

For the Material List for 125 BIL see pages 3 and 5. For the Material List for 150 BIL see pages 4 and 5.

STANDARDS COORDINATOR	STANDARDS SUPERVISOR	UNIT DIRECTOR

Method 2 for Securing Cable and Connectors

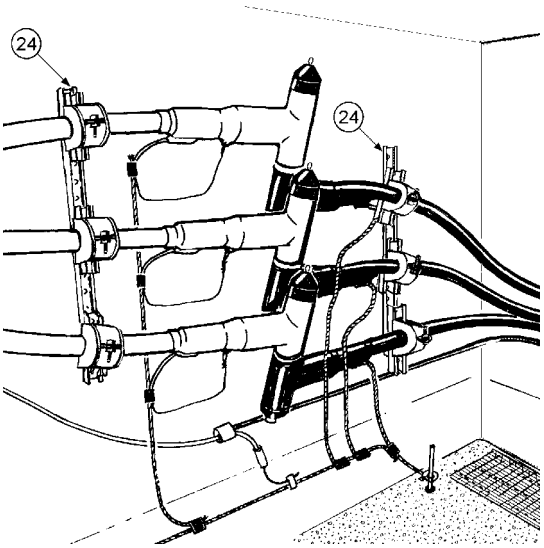

Figure 4 – Method 2 for Securing Cable

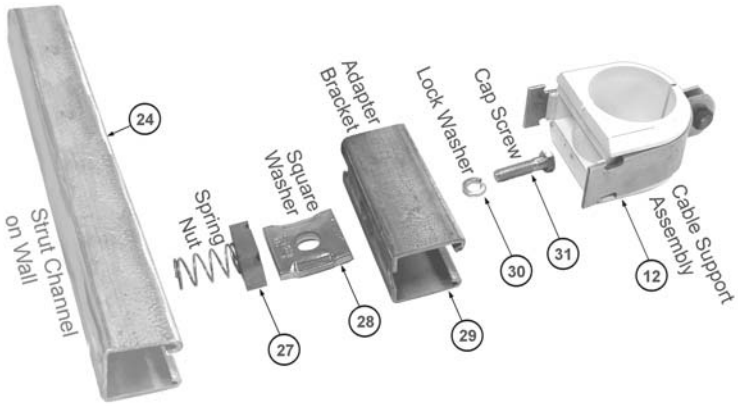

Figure 3 – Method 2, Detail

For securing cable and connectors using **Method 2** (shown above), the cable, mounted in a cable support assembly (Item 12) with the attached adapter, are screwed to channel rack (Item 24) that is secured to the wall. See figure 3, above. To attach the adapter to the channel rack use a cap screw, lock washer, square washer, and spring nut (Items 31, 30, 28, and 27). See figures 2 and 3, above.

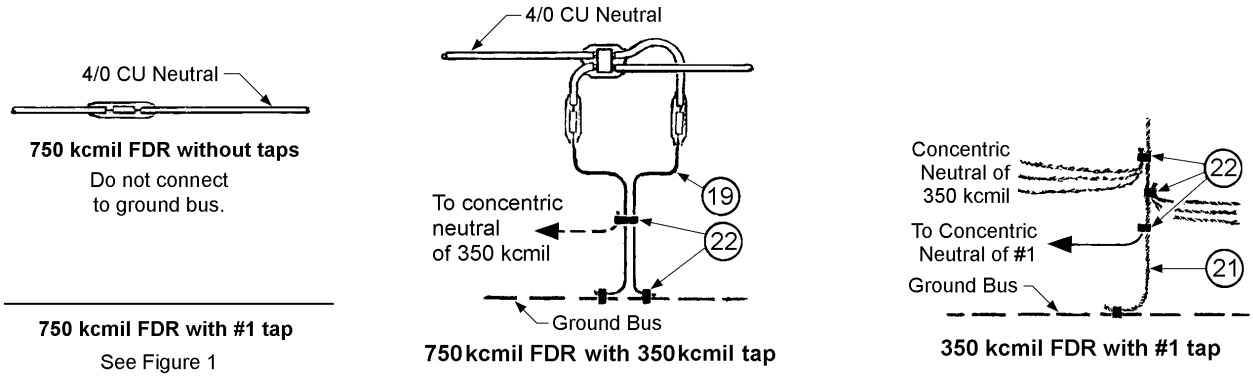

Figure 5 – Other Neutral Connections

Notes:

1. Lubricate parts slightly with silicon grease provided in kit. No substitutions.
2. Torque connector plugs and tap plugs using Elastimold Spanner Wrench #600 SW (Stock No. 686358) between 44 and 51 ft. - lbs.
3. Torque insulating or deadend plugs using 1″ socket between 50 and 60 ft. - lbs.

Reference: Construction Guideline U5-1.02/NCB-80, Splices and Taps, 600 Volt

Material List, 125 BIL only

Splice Configuration

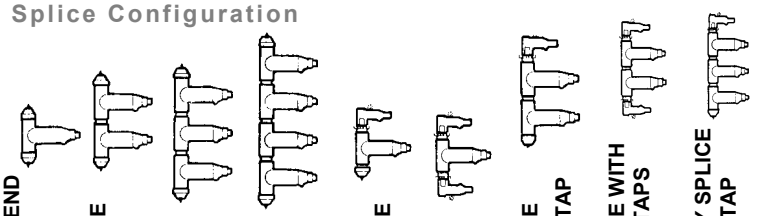

Item	Part Description	Stock No.	600 AMP DEADEND	600 AMP SPLICE	600 AMP3-WAY SPLICE	600 AMP 4-WAY SPLICE	600 AMP WITH 200 AMP SPLICE	600 A WITH 2 200 A TAPS	600 AMP SPLICE WITH 200 AMP TAP	600 AMP SPLICE WITH TWO 200 AMP TAPS	600 AMP 3-WAY SPLICE WITH 200 AMP TAP
			Quantities: Parts per Phase 600 amp Primary Connectors								
			L1	L2	L3	L4	L5	L6	L7	L8	L9
1	Basic Insulated Plug	686356	1	1	1	1	1☼	0	1☼	0	1☼
2	Deadend Plug	686357	1	1	1	1	1☼	0	1☼	0	1☼
3	Shielded Elbow	686350	1	2	3	4	1	1	2	2	3
4	Connector Plug	686353	0	1	2	3	0	0	1	1	2
5	Reducing Tap Plug	686354	0	0	0	0	1☼	1	1☼	1	1☼
6	Reducing Tap Plug	686355	0	0	0	0	1☼	1	1☼	1	1☼
7	Cable Adapter ◊										
	#1	686370	1	2	3	4	1	1	2	2	3
	350 kcmil compressed	686352	1	2	3	4	1	1	2	2	3
	350 kcmil stranded	686352	1	2	3	4	1	1	2	2	3
	750 kcmil compressed	686348	1	2	3	4	1	1	2	2	3
	750 kcmil stranded	686360	1	2	3	4	1	1	2	2	3
8	Spade Contact ◊										
	#1	686375	1	2	3	4	1	1	2	2	3
	350 kcmil compressed	686366	1	2	3	4	1	1	2	2	3
	350 kcmil stranded	686351	1	2	3	4	1	1	2	2	3
	750 kcmil compressed	686349	1	2	3	4	1	1	2	2	3
	750 kcmil stranded	686359	1	2	3	4	1	1	2	2	3
9	Elbow, 200 amp	686416	0	0	0	0	1£	2£	1£	2£	1£
10	Deadend Receptacle	686411	0	0	0	0	1£	2£	1£	2£	1£
11	Grounding Device	▲	1	2	3	4	1	1	2	2	3
12											
	350 kcmil Al	011962	1	2	3	4	1	1	2	2	3
	500 kcmil Cu	011963	1	2	3	4	1	1	2	2	3
	750 kcmil Cu	011964	1	2	3	4	1	1	2	2	3
	1000 kcmil Cu	011965	1	2	3	4	1	1	2	2	3

☼ If female threads on plug, then use tap with male threads.

◊ Size for proper cables. See construction plans.

£ Deadend may be used in place of elbow. See construction plans.

▲ See Table 1 in U5-14/NSP-310 or 70-13.

Material List continued, 150 BIL only

Splice Configuration

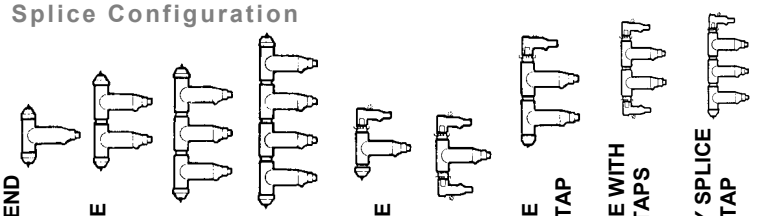

Item	Part Description	Stock No.	600 AMP DEADEND	600 AMP SPLICE	600 AMP3-WAY SPLICE	600 AMP 4-WAY SPLICE	600 AMP WITH 200 AMP SPLICE	600 A WITH 2 200 A TAPS	600 AMP SPLICE WITH 200 AMP TAP	600 AMP SPLICE WITH TWO 200 AMP TAPS	600 AMP 3-WAY SPLICE WITH 200 AMP TAP
			Quantities: Parts per Phase								
			600 amp Primary Connectors								
			L1	L2	L3	L4	L5	L6	L7	L8	L9
1	Basic Insulated Plug	687270	1	1	1	1	1☼	0	1☼	0	1☼
2	Deadend Plug	687280	1	1	1	1	1☼	0	1☼	0	1☼
3	Shielded Elbow	687060	1	2	3	4	1	1	2	2	3
4	Connector Plug	687260	0	1	2	3	0	0	1	1	2
6	Reducing Tap Plug	750 RTP	0	0	0	0	1☼	1	1☼	1	1☼
7	Cable Adapter ◊										
	#1	687019	1	2	3	4	1	1	2	2	3
	350 kcmil compressed	687020	1	2	3	4	1	1	2	2	3
	350 kcmil stranded	687020	1	2	3	4	1	1	2	2	3
	750 kcmil compressed	687028	1	2	3	4	1	1	2	2	3
	750 kcmil stranded	687030	1	2	3	4	1	1	2	2	3
8	Spade Contact ◊										
	#1	686375	1	2	3	4	1	1	2	2	3
	350 kcmil compressed	686366	1	2	3	4	1	1	2	2	3
	350 kcmil stranded	686351	1	2	3	4	1	1	2	2	3
	750 kcmil compressed	686349	1	2	3	4	1	1	2	2	3
	750 kcmil stranded	686359	1	2	3	4	1	1	2	2	3
9	Elbow, 200 amp	687345	0	0	0	0	1£	2£	1£	2£	1£
10	Deadend Receptacle	687340	0	0	0	0	1£	2£	1£	2£	1£
11	Grounding Device	686512	1	2	3	4	1	1	2	2	3
25	Braid, Cu, 1/4″	618614	2 feet, estimated, per support bracket, all connectors								
26	Tie, 0.31″ x 14″	735811E	1 per support bracket, all connectors								

☼ If female threads on plug, then use tap with male threads.

◊ Size for proper cables. See construction plans.

£ Deadend may be used in place of elbow. See construction plans.

Material List continued, 125 BIL and 150 BIL

Item	Part Description	Stock No.	Quantities: Parts per Phase 600 amp, Primary Connectors L1	L2	L3	L4	L5	L6	L7	L8	L9
Method 1 and 2 for Securing Cable											
12	Thermoplastic Cable Support Assembly										
	350 kcmil Al	011962	1	2	3	4	1	1	2	2	3
	500 kcmil Cu	011963	1	2	3	4	1	1	2	2	3
	750 kcmil Cu	011964	1	2	3	4	1	1	2	2	3
	1000 kcmil Cu	011965	1	2	3	4	1	1	2	2	3
Method 1 for Securing Cable											
13	Support bracket (quantities are total per installation)	720627	1	1	2	2	1	1	1	1	2
14	Anchor screw, light duty, **or**	780078E	4 per support bracket, all connectors								
	Spring nut	723607E	4 per support bracket, all connectors								
15	Screw, hex, galvanized, 1/2″ x 1-1/2″	784827E	4 per support bracket, all connectors								
16	Washer, cut, galvanized, 1/2″	585025E	4 per support bracket, all connectors								
17	Washer, lock, galvanized, 1/2″	584255E	4 per support bracket, all connectors								
29	Adapter bracket, 4″	012465	1	2	3	4	1	1	2	2	3
30	Washer, steel, lock, split, zinc-plated, 1/2″	010469	1	2	3	4	1	1	2	2	3
31	Cap screw, steel, hex head, zinc-plated, 1/2″ x 1″	784825E	1	2	3	4	1	1	2	2	3
32	Nut, steel, zinc-plated, 1/2″-13	782986	1	2	3	4	1	1	2	2	3
Method 2 for Securing Cable											
24	Channel rack, support, 1-5/8″ x 1-5/8″	723510	as required, all connectors								
27	Nut, 1/2″, with long spring for 1-5/8″ x 1-5/8″ strut channel	723606E	1	2	3	4	1	1	2	2	3
28	Washer, flat, square, with tabs, and 9/16″ hole	720658	1	2	3	4	1	1	2	2	3
29	Adapter bracket, 4″	012465	1	2	3	4	1	1	2	2	3
30	Washer, steel, lock, split, zinc-plated, 1/2″	010469	1	2	3	4	1	1	2	2	3
31	Cap screw, steel, hex head, zinc-plated, 1/2″ x 1″	784825E	1	2	3	4	1	1	2	2	3
Additional Common Items											
18	Wire #2 bare, stranded, Cu	610434	as required, all connectors								
19	Wire #2 bare, solid, Cu	610006	as required, all connectors								
20	Wire #14 TW white, solid, Cu	612217	as required, all connectors								
21	Wire 4/0 bare, stranded, Cu	610414	as required, all connectors								
22	Connector, compression Cu	677325E thru 677333	as required, all connectors								
23	Lug, terminal, compression, Cu, #2, drill for 1/2″ bolt	677071E	1 per support bracket, all connectors								

TERMINATOR – ELBOW RECEPTACLE INSTALLATION
#8 KERITE CABLE

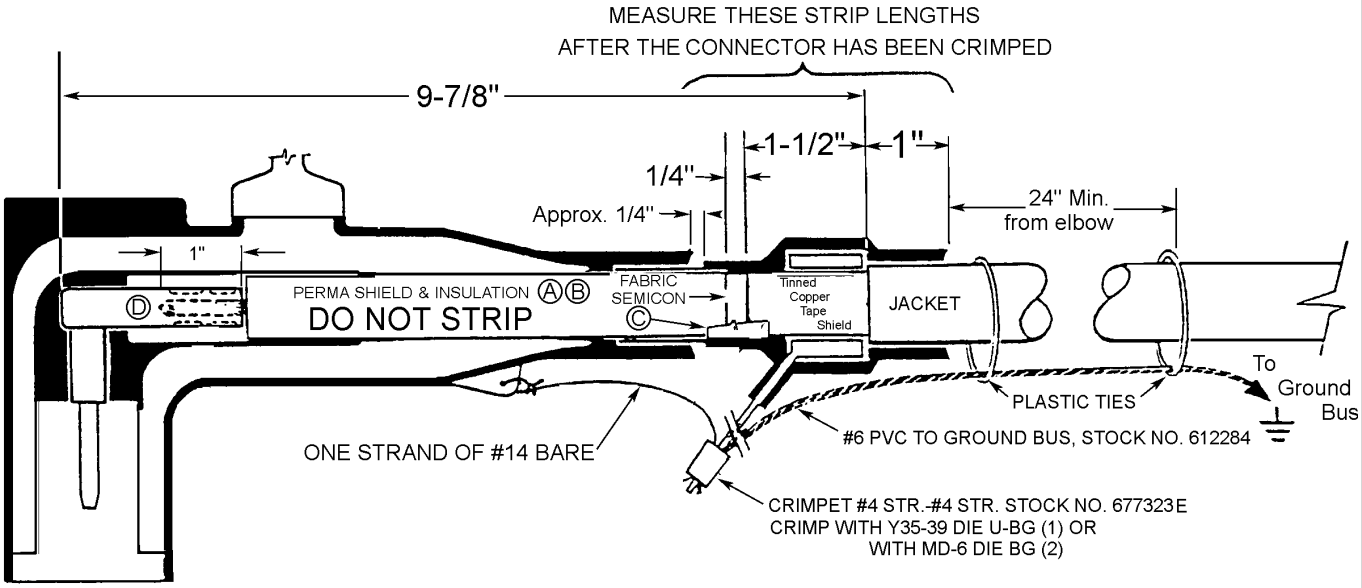

NOTES:

A. Leave Perma Shield on cable insulation. Perma Shield is marked “Do Not Strip”
B. Thoroughly clean the Perma Shield with cable cleaner (Stock No. 726157E) being careful not to wipe any semicon particles from the fabric semicon onto the Perma Shield.
C. Apply 1-1/2 – 2 turns of ¾” electrical tape (Stock No. 736655E) over the copper tape shield, fabric semicon and Perma Shield.
D. Because the present connector is drilled for #6 wire, insert 2 or 3 strands of #14 copper in the connector before crimping. The #8 connector is Stock No. 686424.
E. Follow all other Elastimold instructions for cable training, connector and contact pin installation, cable lubrication etc.
F. Shield adapter to become 20 MA FG. FG will give a tighter fit than GA. (The GA size is still acceptable.)

Elbow Stock No. 686440 and Shield Adapter (20MA) stocked with elbow.

TOOL / DIE / CRIMP INFORMATION FOR 1/2" OD CONNECTORS

	Tool	Die	No. of Crimps
Preferred	Y-35 or Y 39	U25RT	2
	T&B 12 or 15 Ton	45	2
Alternate	MD 6-8	W163	3
	TBM 8 or UT5	TQ	3
Emergency	Y-35 or Y 39	U1CART	2

ORIGINATOR	STANDARDS COORDINATOR	STANDARDS SUPERVISOR	UNIT DIRECTOR
Jim S. Horn	Charles L. Shaffer	John C. Skinner	Betty Robin

200 AMPERE ELBOW SEALING ON 1/0, 28 KV JACKETED CONCENTRIC NEUTRAL CABLE

1. Scope

This construction guideline provides basic instructions and a list of the material and tools required for sealing the jacket end of round wire concentric neutral power cable where elbows are installed.

2. Installation Procedure

Review and follow the instructions provided with the cold shrink sealing kit. The images in this section are provided only to assist with work planning. Note: The exposed cable semi-con between the cable jacket end and the elbow should be no more than 2 inches.

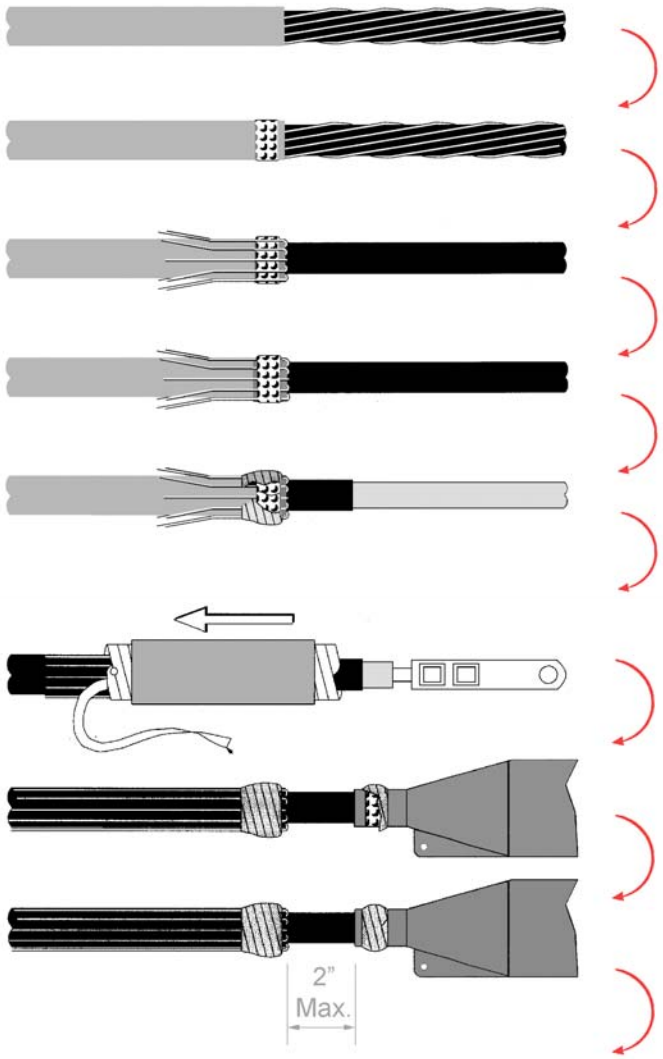

See next page.

STANDARDS COORDINATOR	STANDARDS SUPERVISOR	UNIT DIRECTOR
John Shipek	John Barnett	Hardev Juj

3. 2. Installation Procedure, continued

See previous page.

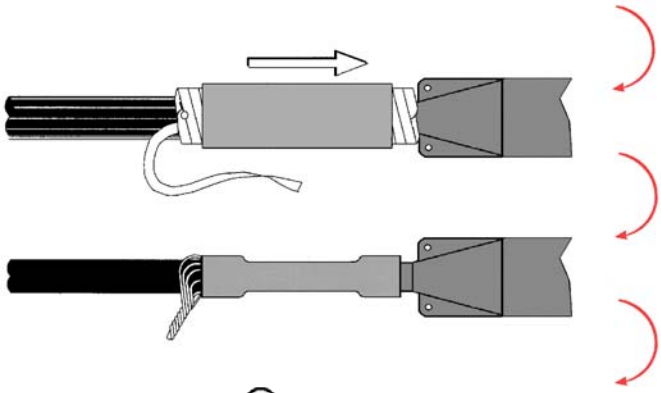

4. Connections

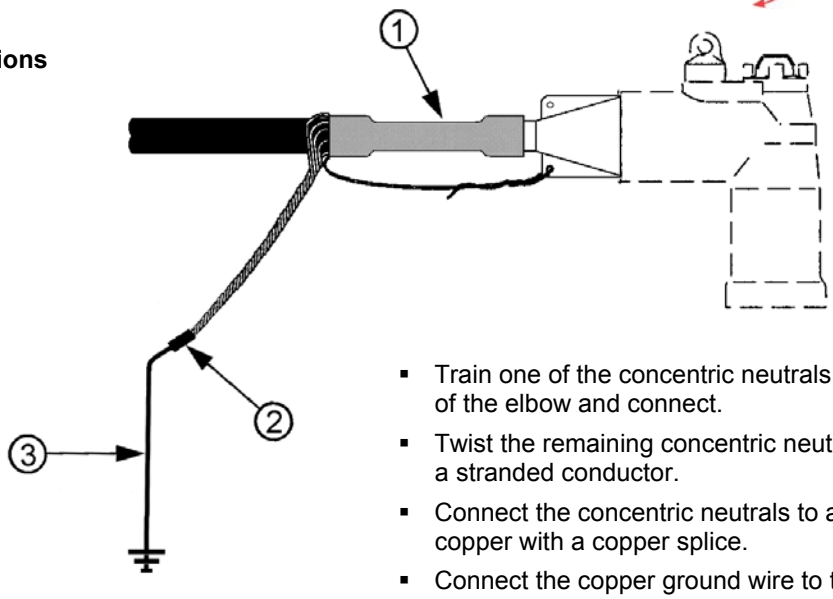

- Train one of the concentric neutrals up to the eye near the end of the elbow and connect.
- Twist the remaining concentric neutrals together to form round a stranded conductor.
- Connect the concentric neutrals to a length of #2 bare stranded copper with a copper splice.
- Connect the copper ground wire to the vault ground.

5. Required Tools

- Cable jacket stripper
- Wire cutters
- Compression connector crimp tool

6. Material List

Item	Quantity	Description	Stock No.
1	1	SEALING KIT, Cold Shrink	012687
2	1 EA	CONNECTOR, Straight Copper, #2 to #2	677357E
3	as required	WIRE, Bare Copper, #2 Stranded	610434

7. References

- Instruction Sheet, 3M Cold Shrink Cable Accessory Sealing Kits for Jacketed Concentric Neutral (JCN) Cable, #78-8121-111-5(A), Issued 02/10/98
- Data Sheet, 3M Cable Accessory Sealing Kits 84452, 8453 and 8454, #80-6108-5252-9, dated 1996

2000 AMP, 600 VOLT ONE WAY AND TWO WAY SUBMERSIBLE CONNECTORS FOR ALUM. TO ALUM. AND ALUM. TO COPPER SECONDARY CABLES

TWO WAY

ONE WAY

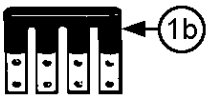

Do NOT use this size in 24" x 36" or smaller handholes.

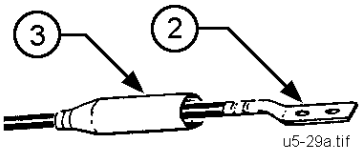

MATERIAL LIST

ITEM	DESCRIPTION			STOCK NO.
1a	CONNECTOR, Two Way, 4 Position			678750
1b	CONNECTOR, One Way, 4 Position			678760
1c	CONNECTOR, One Way, 6 Position			678761
1d	CONNECTOR, One Way, 8 Position			678763
	TERMINAL LUGS	**TOOL**	**DIE (CRIMP)**	
2	LUG, #1 Alum. Comp.	MD-6	W-K840(2)	651255
	LUG, 1/0 Alum. Comp.	MD-6	W-K840(2)	651256
	LUG, 2/0 Alum. Comp.	MD-6	W-K840(2)	651257
	LUG, 3/0 Alum. Comp.	MD-6	W-K840(2)	651258
	LUG, 4/0 Alum. Comp.	MD-6	W-K840(2)	651265
	LUG, 350 Alum. Comp.	Y35/39	U31ART(2)	651268
	LUG, 500 Alum. Comp.	Y35/39	U34ART(2)	651270
	LUG, 750 Alum. Comp.	Y46	P39ART(2)	651272
	LUG, 600 Alum. Comp.	Y46	P39ART(2)	651271
	LUG, #6 Copper Comp.	MD-6		677065E
	LUG, #2 Copper Comp.	MD-6	W162(2)	677071E
	LUG, 1/0 Copper Comp.	MD-6	W163(2)	677075E
	LUG, 2/0 Copper Comp.	MD-6	W241(2)	677077E
	LUG, 3/0 Copper Comp.	MD-6	W243(2)	677079E
	LUG, 4/0 Copper Comp.	MD-6	W-BG(2)	677081E
	LUG, 250 Copper Comp.	Y35/39	U29CRT(2)	677083E
	LUG, 300 Copper Comp.	Y35/39	U30CRT(2)	677085E
	LUG, 350 Copper Comp.	Y35/39	U31CRT(2)	677087E
	LUG, 500 Copper Comp.	Y35/39	U34CRT(2)	677091E
	LUG, 750 Copper Comp.	Y46(2)	U39CRT(2)	677100
3	SLEEVE, Insulating			678630
4	OXIDE Inhibitor, With Grit			726180

NOTES

A All idle connector positions shall be capped with an insulated sleeve (item 3).

B Cable shall be wiped clean before installing insulating sleeve per manufacturer's instruction.

C Apply oxide inhibiting compound (item 4) to the bare strands of the aluminum conductors and wire brush through the compound to break up the aluminum oxide on the strands. After compressing the connector, clean it and the adjacent insulation.

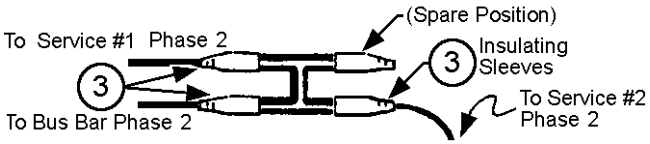

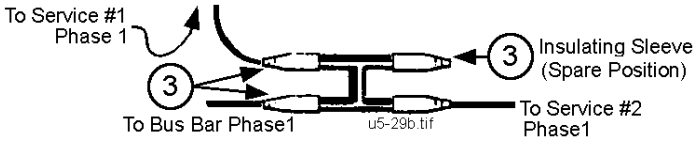

[Phase 3 not shown]

ORIGINATOR	STANDARDS COORDINATOR	STANDARDS SUPERVISOR	UNIT DIRECTOR
Jim S. Horn	Charles L. Shaffer	John Skinner	Betty Robin

SPLICE, STRAIGHT, 28 KV, XLP OR EPR INSULATED CABLE*

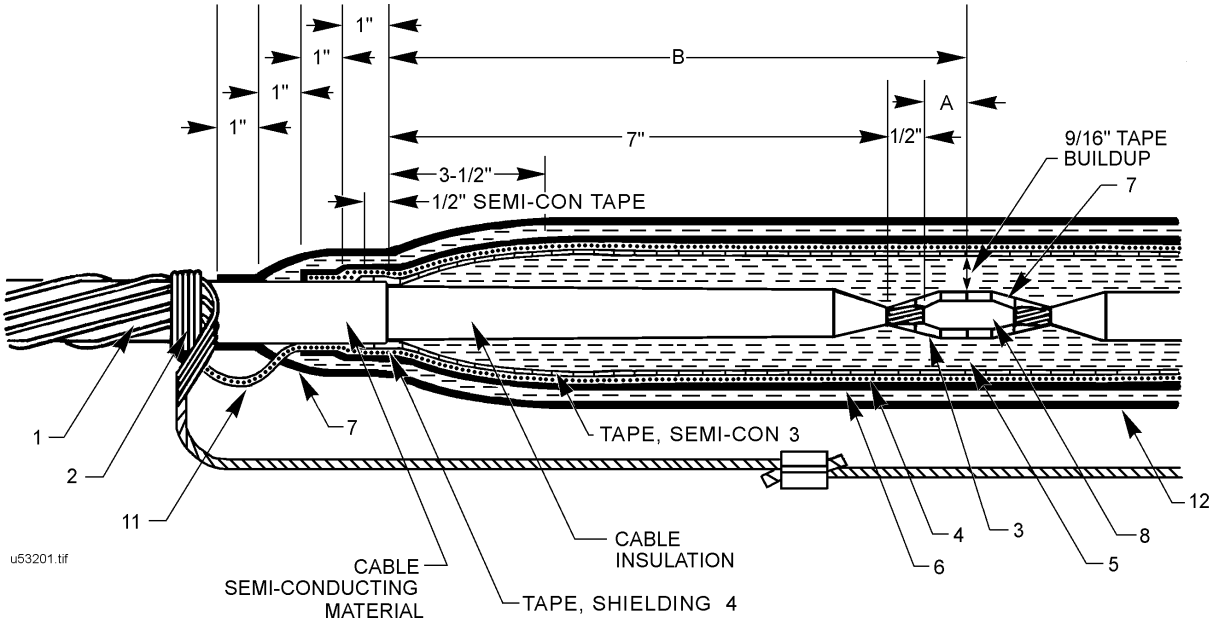

Can be used for concentric neutral or tape shielded 6 conductor (3 neutral) cable.

MATERIAL LIST

Item	Quantity	Description		Stock No.
2	As req'd.	WIRE, Bare Copper, #14		610218E
3	2 RL 5 RL	TAPE, Electrical, Semi-conducting TAPE, Electrical, Semi-conducting	3/4" 1"	736670 736671
4	As req'd.	TAPE, Shielding		736244
5	3 RL 18 RL	TAPE, High Voltage Insulating, linerless	3/4" 1" 1-1/2"	736503 736504 736505
5	3 RL 18 RL	TAPE, High Voltage Insulating, with liner	3/4" 1" 1-1/2"	736502 736500 736501
6	1 RL	TAPE, Plastic, low temperature		736655E
7	As req'd.	SEALANT, Red, heat shrink strip		686541
8		CONNECTOR, Compression, Aluminum	#1 350 kcmil	650631 650637
10	As req'd.	CLEANER, Electrical insulation		726157E
11	2 FT	WIRE, Tinned Copper braid, 5/8" x 3/64"		618625
12	As req'd.	TUBING, Heat shrink, medium wall	0.65" - 1.70" 1.00" - 2.90"	737622 737623
-	As req'd.	SOLDER, Rosin core, 50/50		728504
-	As req'd.	CLOTH, Aluminum Oxide, 150 grit		722344
-	As req'd.	WIRE, Bare Copper, #2		610434

* XLP = Cross-linked Polyethylene Insulated. EPR = Ethylene Propylene Rubber Insulated.

ORIGINATOR	STANDARDS COORDINATOR	STANDARDS SUPERVISOR	UNIT DIRECTOR
Jim S. Horn	Charles L. Shaffer	John C. Rinne	Betty Robin

1. Form and shape the cables to their final position and overlap cables 12” each way from center to provide excess length of the outer concentric wires for later splicing. (If concentric neutral). If trifurcating, sand cable jacket.
2. Bind concentric wires with several turns of #14 copper wire (Stock No. 610218E) at a distance of 4-1/2” + “B” inches from center of splice. Unwrap concentric wires and twist tightly together. Bend away from splice.
3. Cut off excess cable at the splice center.
4. Remove the semi-conducting insulation shield from each cable for a distance of “B” inches, being careful not to damage cable insulation.
5. Remove the insulation from each conductor for a distance of 1/2” + “A” inches from the ends. Pencil insulation back for a minimum of 1”. Slip heat shrink jacketing over cable.
6. Attach compression connector per D14-8/NSV-10.
7. Remove any oxide inhibiting compound (if aluminum) from connector or bare conductor, being careful not to get compound on the insulation. Clean entire prepared splice area, using the wipe provided with the cable cleaner. Wipe cleaner from the insulation towards the insulation semicon, then from the insulation over the penciling.
8. Sand the penciled insulation with aluminum oxide cloth. Be sure that there are no particles of semi-conducting compound left on the exposed insulation.
9. Clean the surface of the connector and exposed insulation with cable cleaner. Wipe off all excess cleaner.
10. Fill connector indents with red heat shrink sealant (Stock No. 686541) to provide a smooth surface for taping.
11. Apply electrical semi-conducting tape (Stock No. 736670) to all exposed conductor and conductor areas, overlapping conductor semicon. This tape should be half-lapped per manufacturer’s instructions. Build up semicon tape on conductor as shown on drawing. See Page 3.
12. Wrap high voltage splicing tape over splice, half-lapping and stretching per manufacturer’s instructions. This tape should be applied to a thickness of 9/16” over connector. It is important to follow the manufacturer’s instructions which are included with each roll of tape.
13. Wrap one half-lapped layer of electrical semi-conducting tape (Stock No. 736671) over high voltage insulating tape extending it 1” beyond the end of the semi-conducting insulation shield.
14. Apply one half-lapped layer of tinned copper mesh braid (Stock No. 736244) over the semi-conducting tape to the end of the splice.
15. Solder a pigtail of copper braid (Stock No. 618625) at one end of the applied shielding tape for future connection to the concentric neutral/ground.
16. Wrap one half-lapped layer of plastic, low temperature tape (Stock No. 736655E) over entire area of shielding tape. Stretch tightly to flatten lower layer of tape. Tape from each end of splice uphill to center, slightly overlapping at center of splice.
17. Thoroughly clean semicon over insulation to a point 3” beyond the plastic tape to ensure a good bond for watertight seal. Solder block copper braid.
18. Apply sealant (Stock No. 686541) under copper braid solder block.
19. Slip heat shrink over splice and shrink.
20. Train twisted concentric wires over splice and join wires to the copper braid with compression connector (Stock No. 677326E or 669379E).
21. If one or both of the cables being spliced is a concentric neutral cable, connect the concentric neutral to ground bus with #2 bare copper wire. If both cables are tape shielded or drain wire (or one of each), connect the drain wires and or copper braid across the splice as indicated in No. 20 above, and connect to ground bus with copper braid (Stock No. 618625).

SPLICE, STRAIGHT, 28 KV
XLP OR EPR INSULATED CABLE

SEMICON TAPING AT CONDUCTOR SEMICON TO CONNECTOR SLEEVE

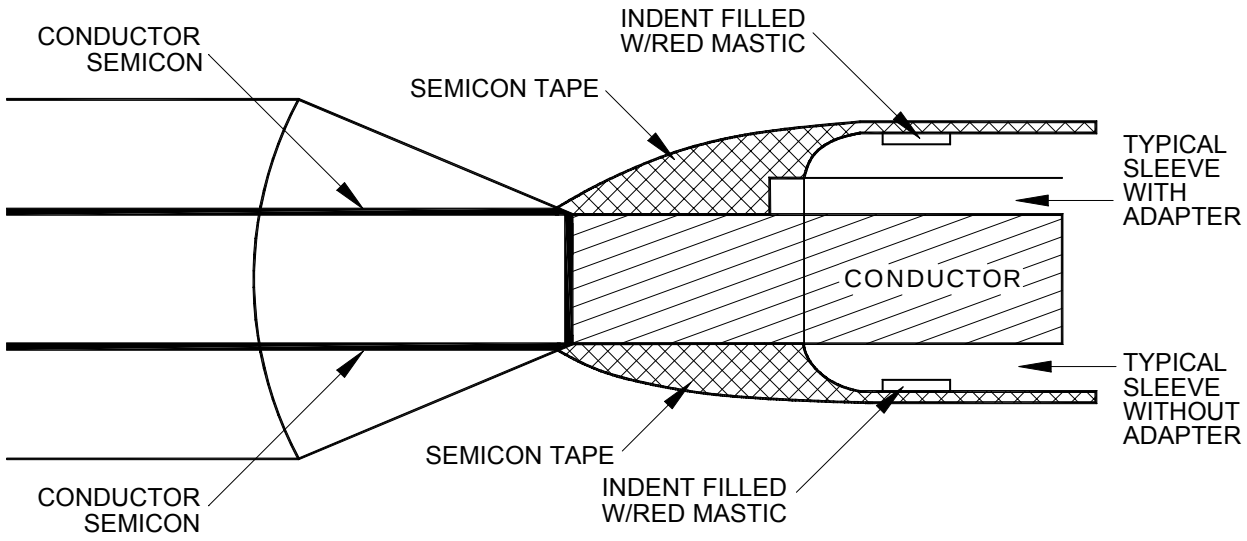

One or two half-lap layers of semicon tape over connector area.

U53201a.dwg

GROUNDING SPLICES ON 28 kV DRAIN WIRE-SHIELDED CABLE

Installation Instructions:

These instructions are to be used in conjunction with Raychem HVS Splice Instructions. This Guideline takes the place of step 16 in the Raychem HVS Splice Instructions.

1. **Bundle Drain Wire and Grounding Conductor with Compression Connector.** Pigtail or bundle the cable grounding wires and attach the grounding conductor using a suitable connector. Wrap tape or putty over the connection to protect the rejacketing sleeve from any sharp points.

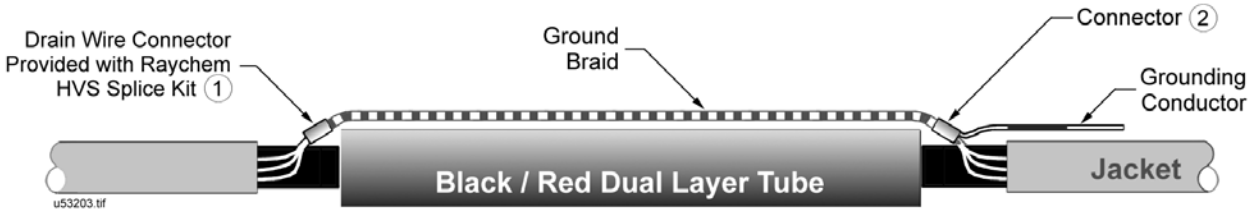

2. **Position Grounding Conductor.** Position the grounding conductor so that the moisture block extends onto the cable jacket as shown. Spring clamps and foil tape are *not* used.

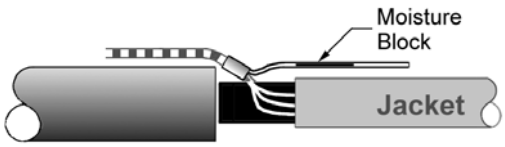

3. **Abrade and Clean Cable Jacket.** Lift the external grounding conductor(s) and abrade and clean four inches of the cable jacket starting at the jacket cutback.

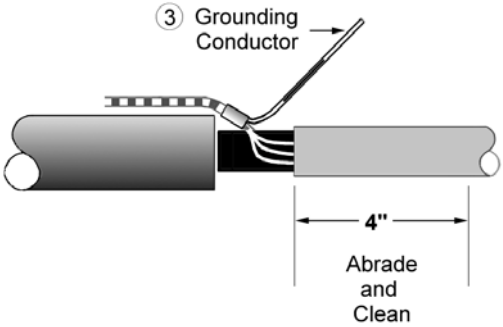

4. **Start Red Sealant.** Remove the backing from a strip of red sealant and place one wrap onto the cable jacket at the jacket cutback.

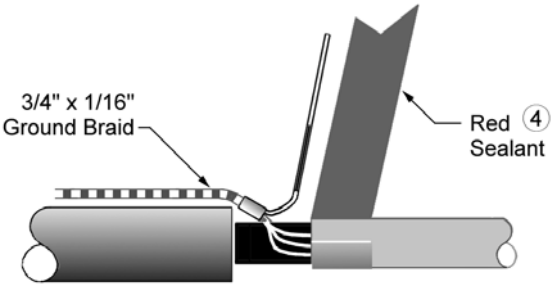

STANDARDS COORDINATOR	STANDARDS SUPERVISOR	UNIT DIRECTOR
Charles L. Shaffer	John Schimmer	Harden Jay

5. **Wrap Red Sealant Over Grounding Conductor.** Press the moisture-blocked external grounding conductor into the red sealant. Place another wrap of red sealant over the external grounding conductor.

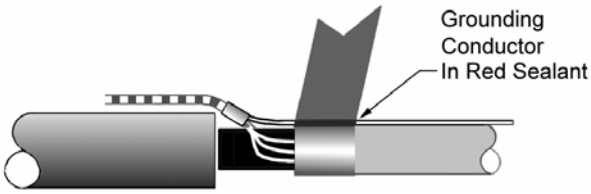

6. **Grounding Complete.** The external grounding is complete. Return to Step 17, page 7 of the Raychem HVS Splice Instructions.

7. **Material List**

Item	Quantity	Description	Stock No.	Matl. Std.
1	1	SPLICE KIT, heat shrink		6871.3
		for 350 and 500 kcmil cable	687514	
		for 750 and 1000 kcmil cable	687516	
2	1	CONNECTOR, Cu Crimpit		6773.5
		for 350 and 500 kcmil cable, #2 to #4	677325E	
		for 750 and 1000 kcmil cable, #2 to #2	677326E	
3*	1	BRAID, solder block, 3/4 X 1/16	–*	–
4*	2	SEALANT, Red Mastic	–*	–
6	1	CONNECTOR, Cu crimpit	677329E to 677333	6773.5

* Included in the Raychem GCA Grounding Kit which comes in the heat shrink splice kit. The constant force spring and the adhesive blocked foil tape, included in the kit, are not used.

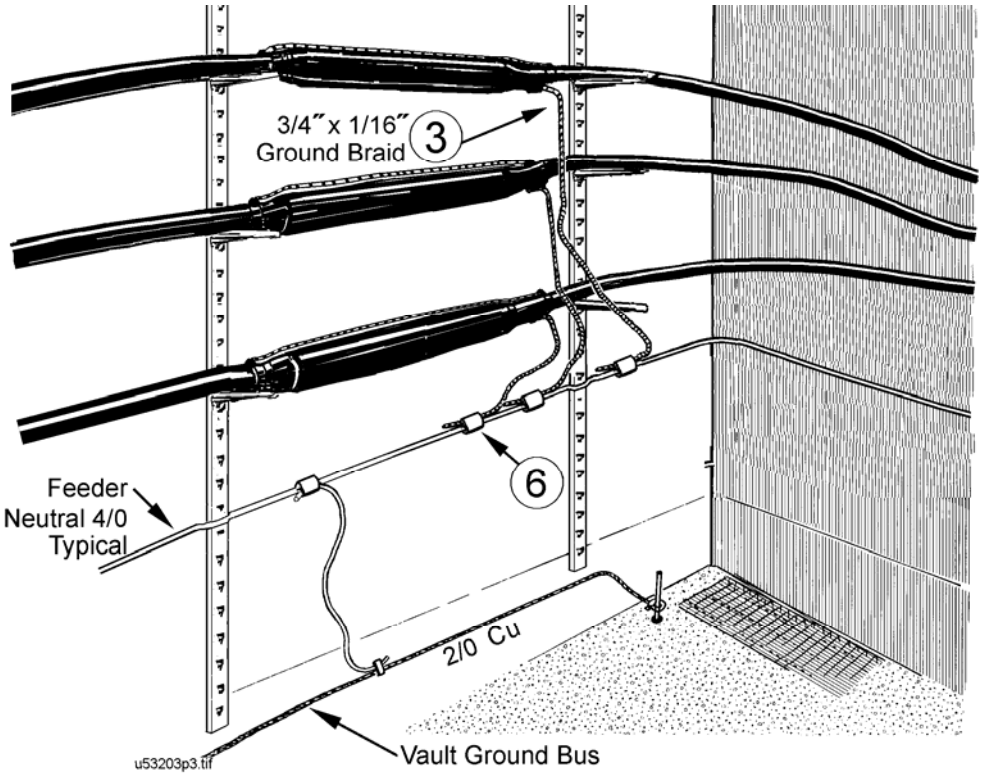

GROUNDING 3M COLD SHRINK SPLICES ON 28 kV FLAT STRAP CABLE

1. Installation Instructions

Ground per the illustration below. These instructions are to be used in conjunction with 3M QS-III Splice Instructions. Use the information for **tape shield** cable in those instructions when using the splice on **flat strap** cable.

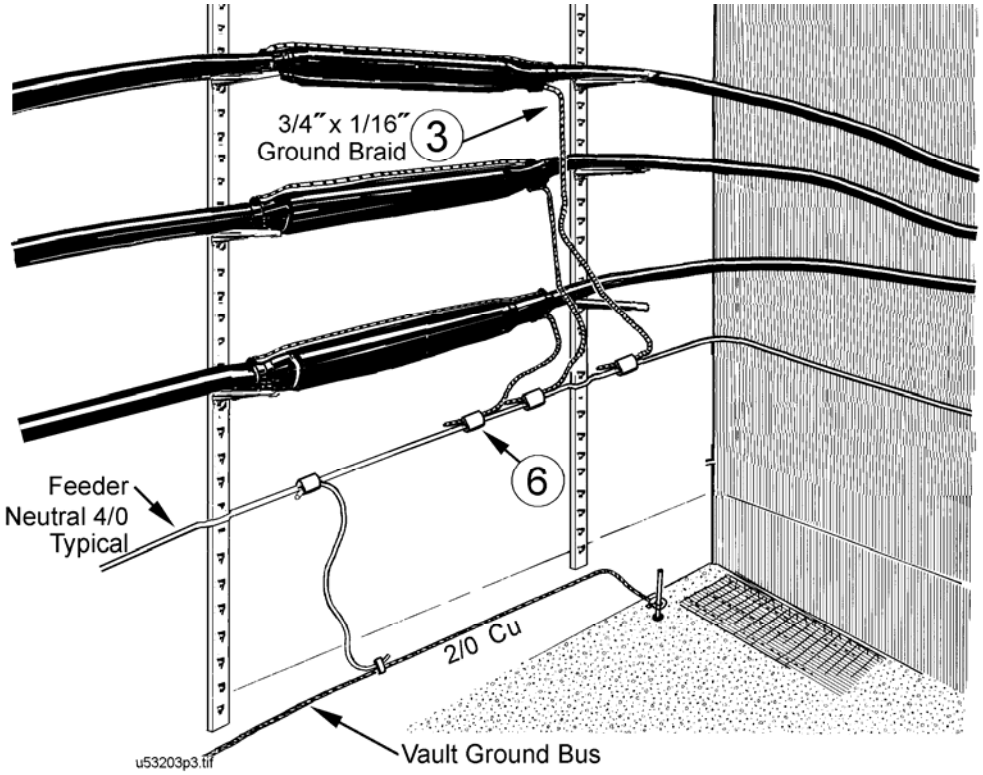

2. Material List

Item	Quantity	Description	Stock No.	Matl. Std.
1	1	SPLICE KIT, cold shrink		6871.4
		for 350 and 500 kcmil cable	012131	
		for 750 and 1000 kcmil cable	012132	
3*	1	BRAID, solder block	–*	–
4*	2 as required	BRAID, tinned Cu, flat, 5/8 X 3/32	618624	–
6	1	CONNECTOR, Cu Crimpit	677329E to 677333E	6773.5

* Part of the 3M cold shrink splice kit.

STANDARDS COORDINATOR	STANDARDS SUPERVISOR	UNIT DIRECTOR

JACKET SEALING WHEN SPLICING JACKETED 1/0 28 kV C.N. CABLE TO BARE 1/0 28 kV C.N. CABLE

The purpose of this procedure is to prevent water from getting under the jacket of the jacketed concentric cable. The splice itself, is considered to be waterproof when properly installed,

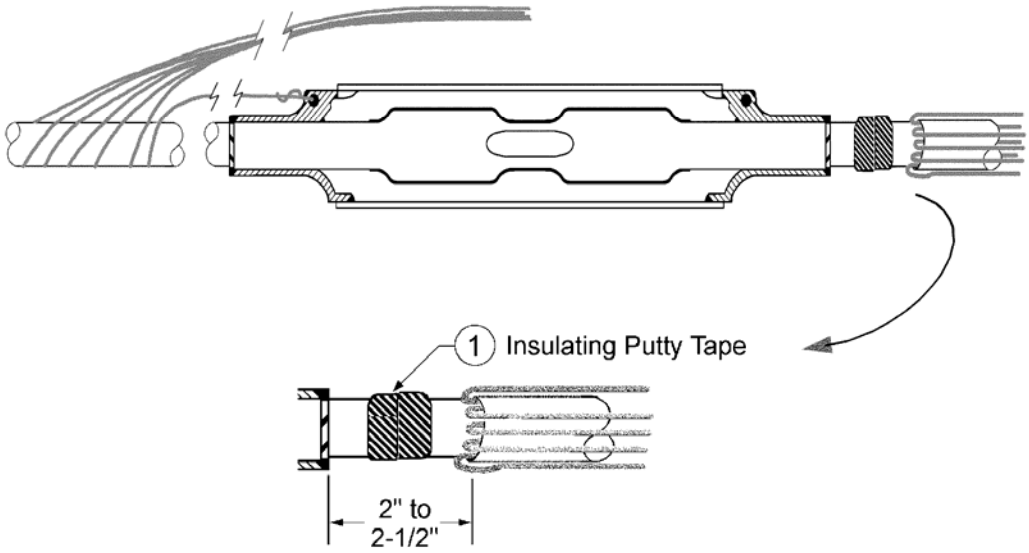

Figure 1.

A. Cut the cables off per the splice instructions.

B. Slide the cold shrink tube (Item 2) onto the jacketed cable and move it out of the way.

C. The jacket cut-back should be 2" to 2-1/2" beyond the end of the splice.

D. Fold the concentric neutral wires back over the jacket.

E. Install the splice per the manufacturer's instructions.

F. Install two wraps of insulating putty tape (Item 1) over the cable semicon shield midway between the end of the splice and the start of the cable jacket.

STANDARDS COORDINATOR	STANDARDS SUPERVISOR	UNIT DIRECTOR
John Shipek	John Barnett	Richard Kent

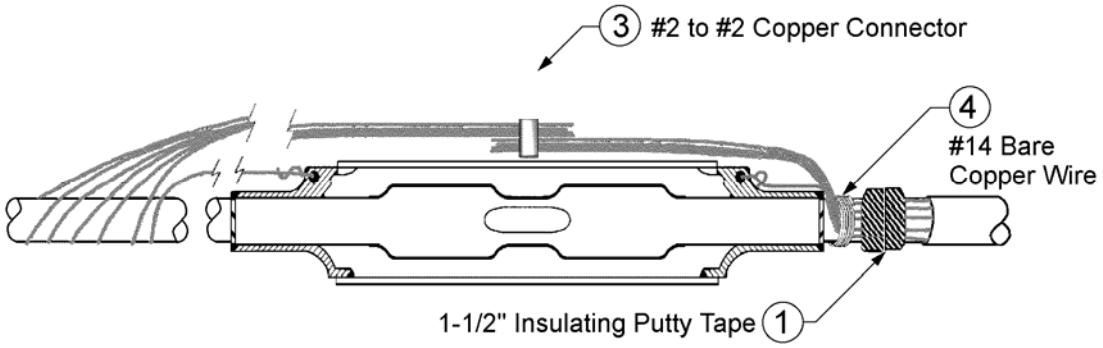

Figure 2.

G. Bend the concentric neutrals back over the cable and train parallel to the splice.

H. The concentric neutrals should be separated from each other and embedded in the insulating putty tape.

I. Install a serving of 4 wraps of No. 14 bare copper wire (Item 4) over the concentric neutral at the end of the splice.

J. Connect one of the concentric neutrals from the jacketed cable to the eye near the end of the splice.

K. Install another two wraps of insulating putty tape (Item 1) over the concentric neutral wires and the first two layers of insulating putty tape.

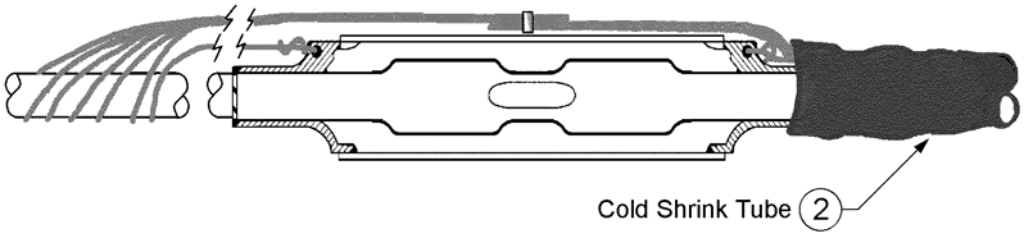

Figure 3.

L. Move the cold shrink tube (Item 2) up into position so that it covers the insulating putty tape (Item 1) and the cable jacket.

M. Remove the core of the cold shrink tube by pulling while unwinding in a counter-clockwise direction.

N. Twist each set concentric neutrals together to form a round stranded conductor and connect together at the center of the splice with a copper crimpit (Item 3).

Material List

Item	Quantity	Description	Stock No.
1	1	TAPE, Putty, Insulating, 1-1/2"	736750E
2	1	TUBE, Cold Shrink, 2" x 6"	012687
3	as req'd	CONNECTOR, Copper, #2 to #2	677375E
4	1'	WIRE, Bare Copper, #14	610218E

INTERCEPTING EXISTING UNDERGROUND SERVICE

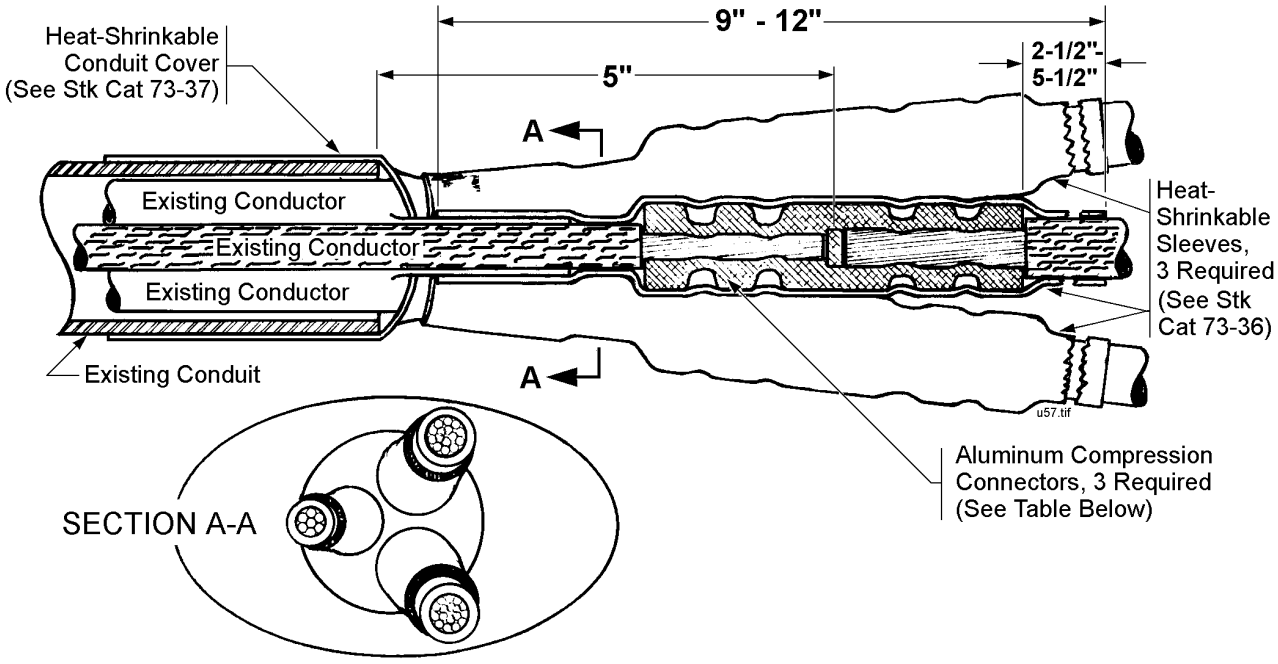

Cut-Away View of Neutral Conductor Splice
(other conductors spliced similarly)

Connector List

Splice Type	Color Code	Conductor Size AWG	Conductor Size kcmil	Tool Y35 Die	Tool Y35 Crimps Per End	Tool MD6 Die	Tool MD6 Crimps Per End	Stock No.	Manufacturer's Catalog No.* (Burndy)
Straight	Gray-Orange	2/0	#4	U249	2	W-K840	7	–	YSD26R2W
Straight	Gray-Red	2/0	#1-2	U249	2	W-K840	7	–	YSD26R2R
Straight	Gray-Yellow	2/0	1/0	U249	2	W-K840	7	–	YSD26R25R
Straight	Gray-Gray	2/0	2/0	U249	2	W-K840	7	–	YSD26R26R
Straight	Pink-Red	4/0	#1-2	U249	2	W-K840	7	–	YSD28R2R
Straight	Pink-Yellow	4/0	1/0	U249	2	W-K840	7	–	YSD28R25R
Straight	Pink-Gray	4/0	2/0	U249	2	W-K840	7	–	YSD28R26R
Straight	Pink-Black	4/0	3/0	U249	2	W-K840	7	–	YSD28R27R
Straight	Pink-Pink	4/0	4/0	U249	2	W-K840	7	–	YSD28R28R
Straight	–	350	350	U299	5	–	–	650609	YS31AY
Tap	–	2/0	#6	U-D3	1	MD6	4	–	YPC27AU4
Tap	–	4/0	#6	U-D3	1	MD6	4	–	YPC28U4
Tap	–	2/0	4/0	U-N	3	–	–	–	YPC33R28R

* For contractor's use only.

ORIGINATOR	STANDARDS COORDINATOR	STANDARDS SUPERVISOR	UNIT DIRECTOR
Jim S. Horn	Charles L. Shaffer	John C. Skinner	Betty Robin

600 AMPERE PRIMARY EQUIPMENT TERMINATION

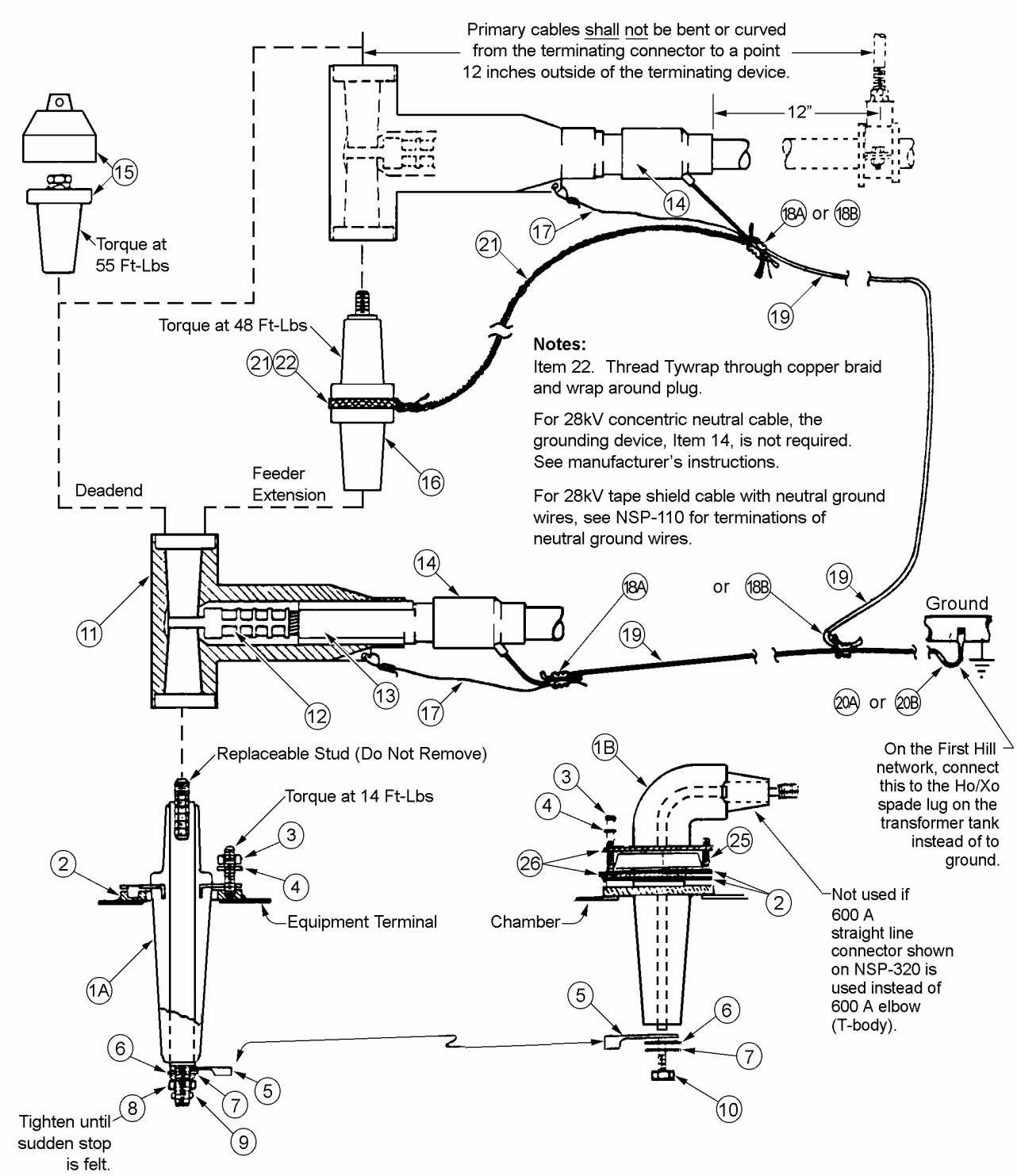

STANDARDS COORDINATOR	STANDARDS SUPERVISOR	UNIT DIRECTOR
John Shipek	John Barnett	Richard Kent

Material List

Item	Quantity	Description	Stock No.	Matl. Std.
1A	3	Bushing, 600 ampere, bolted	686387	6862.10
1B ***	3	Bushing, 600 ampere, bolted, 90 degree	687009	6863.5
2 ***	3 (6)	Bushing, Gasket	686386	6862.5
3	18	Nut, 3/8″ x 16 cad plated	782984E	7829.9
4	18	Washer, Lock, 3/8″	788123E	7880.2
5	3	Connector, ring, compression, #2	677188	none
6	3	Washer, Stainless Steel Flat, 5/8″	788031	7820.0
7	3	Washer, Belleville, 5/8″	788300	7820.0
8	3	Nut, 5/8″ x 11, aluminum	783560	none
9	3	Nut, Jam, 5/8″ x 11, brass	783311E	none
10	3	Bolt, aluminum, 5/8-11 x 1″	781819	none
11	3 or 6 *	Elbow, BLR, 600 ampere, 125 kV BIL	686350	6863.15
12	3	Compression Connector, aluminum	See Table 1	6863.10
13	3	Cable Adapter	See Table 1	6863.15
14	3	Grounding Device	686512	none
15	3	Plug and Cap, basic insulating	686356	6863.17
16	3 *	Connector Plug	686353	6863.17
17	20´	Wire, #14, soft round bare copper	610218E	6102.2
18A	3	Connector Pressure Tap	677326E	6773.5
18B	3	Connector Pressure Tap	677325E	6773.5
19	30	Wire, #2, bare copper stranded	610434	6103.9
20A	1	Connector for aluminum ground bus	651255	6774.9
20B	1	Connector for copper ground bus	677071E	6770.7
21	15 *	Wire, tinned, copper braid	618614	none
22	3 *	Strap, adjustable tie	735811E	7358.1
23	3 *	Bushing Extension (not shown)	686380	6863.17
24	1 **	Plate, Termination Adapter (not shown)	686205	6862.3
25 ***	18	Stud, Full Thread 3/8″-16 x 2-3/8″	786600	none
26 ***	6	Adapter, Gasket, Ring	686280	6862.8

* Items 16, 21, and 22 are required for bushing extension item 23, required for additional feeder extensions with three additional item 11.

** Use Item 24 when replacing three-phase potheads.

*** 90 degree Bushing requires 2 gasket adapter rings, two gaskets and 3/8″-16 X 2-3/8″ studs for mounting. A stud made from 5/8″-11 Al. bolts is needed for bushing inside terminal chamber to replace contact spade stud with flat sides.

Table I

			item 12	item 13	item 14
15 kV Cable Copper Tape	**Cable Stock No.**	**OD Over Insulation, in.**	**Compression Connector**	**Cable Adapter**	**Grounding Device**
#1 CR	613523	0.725 - 0.835	686375	686310	686512
2/0 CCR	613520	0.775 - 0.885	686377	686314	686512
3/0 CR	613526	0.825 - 0.935	686378	686315	686512
350 CCR	613530	0.980 - 1.115	686366	686361	686512
500 CCR	613532	1.040 - 1.175	686362	686364	686512
500 CCR EPR *	010128	1.125 - 1.185	686362	686364	686512
750 CCR	613534	1.285 - 1.395	686349	686348	686512
1000 CR EPR triplex flat strap	623670	1.515 - 1.575	010136	686372	686512
* Controlled diameter cable for use in 3-1/2″ clay tile and other limited diameter ducts.					
28 kV Cable Copper Tape	**Cable Stock No.**	**OD Over Insulation, in.**	**Compression Connector**	**Cable Adapter**	**Grounding Device**
#1 CR	613540	0 .875 - 0.985	686375	686370	686512
350 CCR	613543	1.160 - 1.305	686366	686365	686512
28 kV Cable Flat Strap	**Cable Stock No.**	**OD Over Insulation, in.**	**Compression Connector**	**Cable Adapter**	**Grounding Device**
350 Al CCR	012099	1.215 - 1.275	686366	686365	686512
500 CCR	012100	1.335 - 1.395	686362	686345	686512
750 CCR	012101	1.520 - 1.580	686349	686348	686512
1000 CCR	012102	1.670 - 1.730	686398	686372	686512
28 kV Cable Drain Wire	**Cable Stock No.**	**OD Over Insulation, in.**	**Compression Connector**	**Cable Adapter**	**Grounding Device**
350 Al CCR	613613	1.226 - 1.286	686366	686365	686512
500 CCR	613615	1.290 - 1.390	686362	686345	686512
750 CCR	613618	1.490 - 1.585	686349	686348	686512
1000 CCR	613619	1.665 - 1.740	686398	686372	686512
28 kV Cable Concentric Neutral	**Cable Stock No.**	**OD Over Insulation, in.**	**Compression Connector**	**Cable Adapter**	**Grounding Device**
#1 CR Al	–	0.880 - 0.980	686375	686370	not required
1/0 Solid Al	602025	0.915 - 0.975	686375	686370	not required
350 CCR Al	–	1.160 - 1.305	686366	686365	not required

CR = Concentric Round
CCR = Compact Concentric Round

1. Lubricate parts slightly with silicon grease provided in kit. **No substitutions.**
2. Torque connector plugs, Item 16, from 44 to 51 ft-lb using Elastimold spanner wrench, #600 SW, Stock Number 686358.
3. Torque insulating or dead-end plugs to between 50 to 60 ft-lbs using 1″ socket.
4. Connect Item 20A or 20B permanently to vault ground bus.
5. When grounding device has #2 lead, use Item 18A connector. When grounding device has #6 lead, use Item 18B connector. Compress with MD-6 tool and W-C die.

SEPARABLE CONNECTOR (ELBOW), 200 A, LOADBREAK

1. Scope

This construction guideline identifies the material and tools required to install a 200 A, loadbreak, separable connector (elbow) on the end of a piece of primary cable.

Loadbreak elbows (with both phase-to-ground and phase-to-phase voltage ratings) have a white band with a centered black strip (see figure 4.1) secured to the cable entrance portion of the connector. Deadbreak elbows have no such special banding.

The material list includes all the parts necessary to complete an installation. Optional connector accessories and replacement parts are also identified. The material list has been organized to be cable specific.

Paper-insulated-lead-covered (PILC) cable and sector cable are outside the scope of this guideline.

Cable preparation work procedures and connector installation procedures are outside the scope of this guideline.

For cable technical data, refer to E6-1.0/NGE-70.

For general cable preparation procedures, refer to U5-2.81/NSP-290.

For cutback lengths and connector assembly and installation procedures, refer to the specific instructions that were provided with the connector.

For connector continuous, fault closing, and short-time current ratings and overload capability, refer to IEEE 386.

Loadbreak elbows are a subcategory of separable connectors, which is a subcategory of dead front cable accessories.

STANDARDS COORDINATOR	STANDARDS SUPERVISOR	UNIT DIRECTOR
John Shipek	John Barnett	Richard Kent

2. Application

A separable connector (elbow) is a fully insulated and shielded system for terminating and electrically connecting an insulated power cable to electrical apparatus, other power cables, or both, so designed that the electrical connection can be readily established or broken by engaging or separating the connector at the operating interface.

The separable connectors described in this construction guideline are intended for use on the following three-phase, 60 Hz systems:

- 26.4 kV, 4-wire, solidly-grounded, wye-connected
- 5 kV and below

Because of high fault duty, connectors rated 200 A continuous are not appropriate for network systems. Network systems should be constructed with connectors rated 600 A (or 900 A) continuous.

Connector is equipped with a capacitive test point.

This guideline may be used by engineers to design connector systems and create bills of material or by field crews when performing actual installations.

Only qualified electrical workers shall install and operate separable connector systems.

3. Separable Connector Technical Description:

voltage class	25 kV
common name	200 amp loadbreak elbow
Seattle City Light Material Standard	6864.05
manufacturer(s)	various
maximum voltage rating (ph-g)	15.2 kV RMS
maximum voltage rating (ph-g/ph-ph)	15.2/26.3 kV RMS
BIL	125 kV crest
continuous current rating	200 A RMS
short-time current rating	10 kA RMS, symmetrical
IEEE 386 interface	Figure 7

4. General Examples

Example 4.1: 200 A loadbreak elbow installed on tape shielded type cable. Note, for this type of cable, a jacket seal and a metallic shield adapter kit is required.

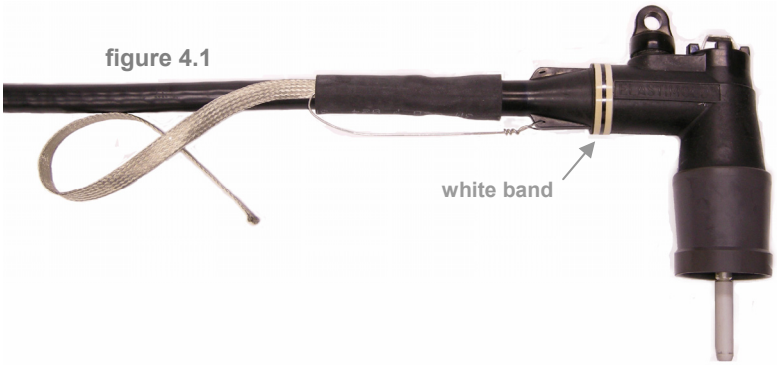

figure 4.1

Example 4.2: 200 A loadbreak elbow installed on bare, round wire, concentric neutral cable. Note, for this type of cable, neither a jacket seal or a metallic shield adapter kit is required.

figure 4.2

Example 4.3: 200 A loadbreak elbow installed on jacketed, round wire, concentric neutral cable. Note, for this type of cable, a jacket seal is required, but a metallic shield adapter kit is not.

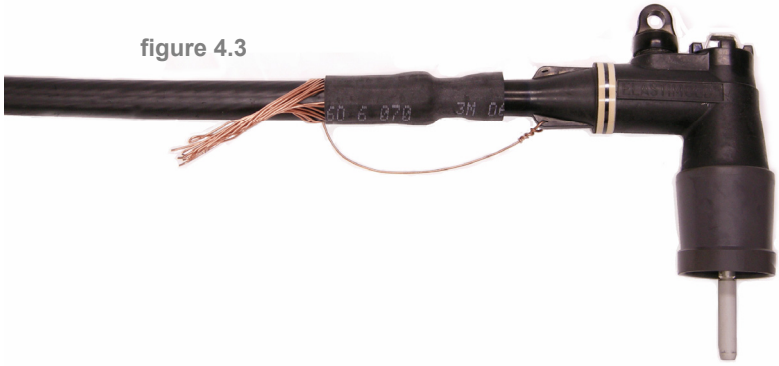

figure 4.3

5. Material List

Table 5.1

Stock Number	▼ Rated Circuit Voltage, kV	Type	Size, AWG/ kcmil	Shape	Shield Type	Required Elbow Kit Stock No.	Required Additional Parts Stock No.	Replacement Compression Connector Stock No.	Table 5.1 Notes
1	2	3	4	5	6	7	8	9	10
613212	5	1/C	#6	compressed	tape				
613222	5	1/C	350	compressed	tape				
601025	5	1/C	500	class B	DW				
613522	15	3/C	#1	compressed	tape				
613523	15	3/C	#1	compressed	tape				
613520	15	3/C	2/0	compressed	tape				
613521	15	3/C	3/0	compressed	tape	*blank indicates*			
613526	15	3/C	3/0	compressed	tape	*not a stock item or not available*			
613530	15	3/C	350	compact	tape	*from any source*			
613531	15	3/C	500	sector	tape				f
010128	15	3/C	500	compact	tape				
613532	15	3/C	500	compact	tape				
623640	15	1/C	500	compact	tape				
012735	15	3-1/C	500	compressed	FS				
613533	15	3/C	750	sector	tape				f
613534	15	3/C	750	compact	tape				
623670	15	3-1/C	1000	compressed	FS				
623650	27	3-1/C+2N	#8	compressed	tape	686442	012662	686424	a b
602027	28	1/C	#1	class B	RW/CN				
613540	28	3/C+3G	#1	compressed	Tape	686445	012662	686417	b
602025	28	1/C+1N	1/0	solid	RW/CN	686445	NR	686417	e
012098	28	1/C+1N	1/0	solid	RW/CN	686445	012687	686417	d
602044	28	1/C	350	class B	RW/CN				
012099	28	1/C	350	compact	FS				
613613	28	1/C	350	compact	DW				
613543	28	3/C+3G	350	compact	tape				
012100	28	1/C	500	compact	FS				
613615	28	1/C	500	compact	DW				
613645	28	1/C	500	compressed	FS	*blank indicates*			
602119	28	1/C	750	compact	DW	*not a stock item or not available*			
613618	28	1/C	750	compact	DW	*from any source*			
974050	28	3/C	750	sector	tape				f
012101	28	1/C	750	compact	FS				
012102	28	1/C	1000	compact	FS				
613619	28	1/C	1000	compact	DW				
613655	28	1/C	1000	compressed	FS				
none	35	1/C	350	compressed	tape				
623660	35	1/C	750	compact	DW				
623655	35	1/C	1000	compact	tape				

NR = Not required

5. Material List, continued

Table 5.1 Notes:

Refer to Figures for information on what parts compose a Stock Number or kit.

Beginning in 1992, Cooper Power Systems loadbreak elbows were required by Seattle City Light to be specially marked with a blue-black-blue identification band. This requirement was dropped in 2007. Refer to Figure 5.1.

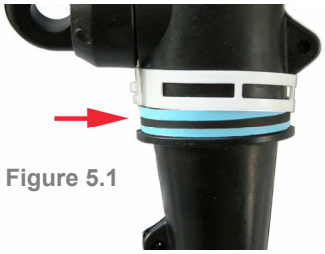

Figure 5.1

a. Elbow kit Stock Number 623442 does not include a compression connector. This extra part, Stock Number 686424, must be called out for separately.

b. Stock Number 012662 is a shield adapter kit that provides cable jacket-to-accessory sealing and grounding.

d. Stock Number 012687 is a sealing kit for jacketed, round wire concentric neutral cable.

e. A sealing/adapter kit is not required when installing an elbow on bare, round wire concentric neutral cable.

f. Separable connectors are not commercially available for sector cable. Connections must be hand taped.

Elbow kit (body, loadbreak probe, probe installation tool, and instruction sheet)

Stock No. **686442**

figure 5.2

Elbow kit (body, compression connector, loadbreak probe, probe installation tool, silicone lubricant, and instruction sheet)

Stock No. **686445**

figure 5.3

5. Material List, continued

Jacket sealing/shield adapter kit for tape shielded cable (cold shrink tube, mastic seal strips, 5/8-inch by 3/4-inch diameter constant force spring, preformed ground/bleeder wire, Scotch No. 13 semi-con tape, and instruction sheet)

Stock No. **012662**

figure 5.4

Jacket sealing kit for jacketed concentric neutral cable (cold shrink tube, mastic seal strips, and instruction sheet)

Stock No. **012687**

figure 5.5

Compression connector for #8 AWG stranded copper conductor, Kerite

Stock No. **686424**

figure 5.6

Compression connector for 1/0 AWG solid aluminum conductor

Stock No. **686417**

figure 5.7

6. Connector Accessories (Optional)

Elbow mud cover

Stock No. **686467**

figure 6

7. Replacement Parts

Contact probe for RTE, Cooper Power Systems, General Electric, and Elastimold elbows (installation tool and instructions)

Stock No. **686423**

figure 7

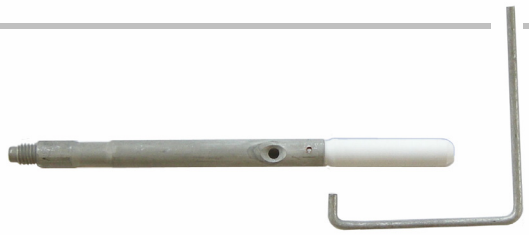

8. Tools

Information relating to tool type, die number, and number of crimps is provided with the connector.

9. References

386-2006; "Standard for Separable Insulated Connector Systems for Power Distribution Systems Above 600 V"; IEEE; 2006

6864.05; "Connector (Elbow) Separable, Insulated, Loadbreak, 200-Ampere"; *Material Standards*; SCL

B100-02024; *Components Master Catalog, 5 kV-35 kV Electrical Distribution Systems, Specifiers Guide*; Cooper Power Systems

E6-1.0/NGE-70; "Properties of Medium Voltage Cables"; *Construction Guidelines*; SCL

PG-CA-0506; *Cable Accessories for 5 kV-35 kV Distribution Systems, Product Selection Guide*; Elastimold

Shipek, John; SCL Standards Engineer, subject matter expert and originator of U5-15.05 (john.shipek@seattle.gov)

U5-2.81/NSP-290; "Primary Cable Preparation, General"; *Construction Guidelines*; SCL

SEPARABLE CONNECTOR (ELBOW), 200 A, DEADBREAK

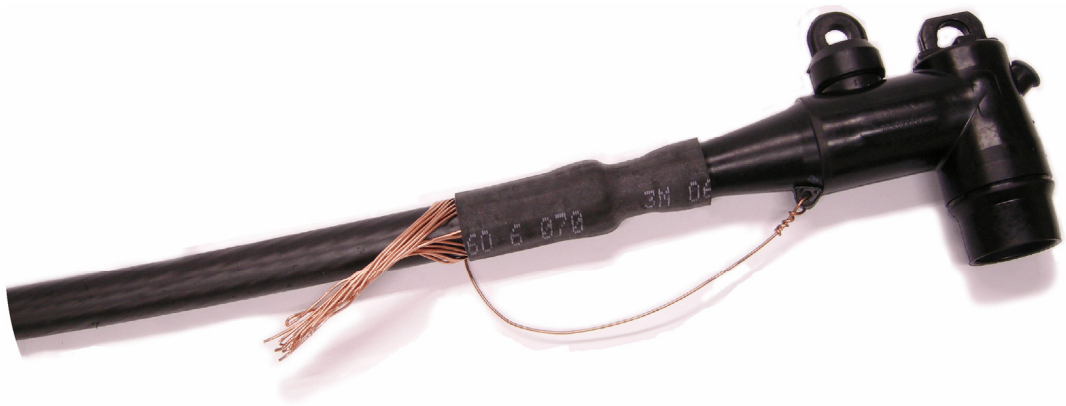

1. Scope

This construction guideline identifies the material and tools required to install a 200 A, deadbreak, separable connector (elbow) on the end of a piece of primary cable.

The material list includes all the parts necessary to complete an installation. Optional connector accessories and replacement parts are also identified. The material list has been organized to be cable specific.

Paper-insulated-lead-covered (PILC) cable and sector cable are outside the scope of this guideline.

Cable preparation work procedures and connector installation procedures are outside the scope of this guideline.

For cable technical data, refer to E6-1.0/NGE-70.

For general cable preparation procedures, refer to U5-2.81/NSP-290.

For cutback lengths and connector assembly and installation procedures, refer to the specific instructions that were provided with the connector.

For connector continuous, fault closing, and short-time current ratings and overload capability, refer to IEEE 386.

Deadbreak elbows are a subcategory of separable connectors, which is a subcategory of dead front cable accessories.

2. Application

A separable connector (elbow) is a fully insulated and shielded system for terminating and electrically connecting an insulated power cable to electrical apparatus, other power cables, or both, so designed that the electrical connection can be readily established or broken by engaging or separating the connector at the operating interface.

The separable connectors described in this construction guideline are intended for use on the following three-phase, 60 Hz system: 26.4 kV, 4-wire, solidly-grounded, wye-connected.

Because of high fault duty, connectors rated 200 A continuous are not appropriate for network systems. Network systems should be constructed with connectors rated 600 A (or 900 A) continuous.

Connector is equipped with a capacitive test point.

This guideline may be used by engineers to design connector systems and create bills of material or by field crews when performing actual installations.

Only qualified electrical workers shall install and operate separable connector systems.

STANDARDS COORDINATOR	STANDARDS SUPERVISOR	UNIT DIRECTOR
John Shipek	John Barnett	Richard Kent

3. General Examples

Example 3.1: 200 A deadbreak elbow installed on tape shielded type cable. Note, for this type of cable, a jacket seal and a metallic shield adapter kit is required.

figure 3.1

Example 3.2: 200 A deadbreak elbow installed on bare, round wire, concentric neutral cable. Note, for this type of cable, neither a jacket seal or a metallic shield adapter kit is required.

figure 3.2

Example 3.3: 200 A deadbreak elbow installed on jacketed, round wire, concentric neutral cable. Note, for this type of cable, a jacket seal is required, but a metallic shield adapter kit is not.

figure 3.3

4. Separable Connector Technical Description:

voltage class	25 kV
common name	200 amp deadbreak elbow
Seattle City Light Material Standard	6864.15
manufacturer(s)	various
maximum voltage rating (ph-g)	15.2 kV RMS
BIL	125 kV crest
continuous current rating	200 A RMS
short-time current rating	10 kA RMS, symmetrical
IEEE 386 interface	Figure 4

5. Material List

Table 5.1

Table 5.1 lists the parts necessary to install a 200 A, deadbreak, separable connector (elbow) on cable not assigned a Stock Number.

Cable						Required	Required	Replacement	
Stock Number	▼ **Rated Curcuit Voltage, kV**	**Type**	**Size, AWG**	**Shape**	**Shield Type**	**Elbow Kit Stock No.**	**Additional Parts Stock No.**	**Compression Connector Stock No.**	**Table 5.1 Notes**
1	2	3	4	5	6	7	8	9	10
none	**5**	1/C	**#2**	na	na	686412	NR	686421	**a**
none	**5**	1/C	**1/0**	na	na	686413	NR	686417	**b**
none	**15**	1/C	**1/0**	na	na	686414	NR	686417	**c**

na = not available NR = not required

Table 5.1 Notes:

a. Little technical information is known about this cable. It was installed in the Seattle neighborhoods of Laurelhurst, Hillcrest, and/or Edge-O-Town. This elbow was determined to work. Refer to Material Standard 6864.15. Cable is claimed to have XLP insulation with an outside diameter of 0.540 inch.

b. Little technical information is known about this cable. It was installed in the Seattle neighborhoods of Laurelhurst, Hillcrest, and/or Edge-O-Town. This elbow was determined to work. Refer to Material Standard 6864.15. Cable is claimed to have XLP insulation with an outside diameter of 0.585 inch.

c. Little technical information is known about this cable. It was installed in the Seattle neighborhoods of Laurelhurst, Hillcrest, and/or Edge-O-Town. This elbow was determined to work. Refer to Material Standard 6864.15. Cable is claimed to have XLP insulation with an outside diameter of 0.765 inch.

Table 5.2 Notes (see next page for table) **:**

Refer to Figures for information on what parts compose a Stock Number or kit.

a. Elbow kit Stock Number 623440 does not include a compression connector of the correct size. This extra part, Stock Number 686424, must be called out for separately.

b. Stock Number 012662 is a shield adapter kit that provides cable jacket-to-accessory sealing and grounding.

d. Stock Number 012687 is a sealing kit for jacketed, round wire concentric neutral cable.

e. A sealing/adapter kit is not required when installing an elbow on bare, round wire concentric neutral cable.

f. Separable connectors are not commercially available for sector cable. Connections must be hand taped.

5. Material List, continued

Table 5.2

Stock Number	▼ Rated Circuit Voltage, kV	Type	Size, AWG/ kcmil	Shape	Shield Type	Required Elbow Kit Stock No.	Required Additional Parts Stock No.	Replacement Compression Connector Stock No.	Table 5.2 Notes
1	2	3	4	5	6	7	8	9	10
613212	5	1/C	#6	compressed	tape				
613222	5	1/C	350	compressed	tape				
601025	5	1/C	500	class B	DW				
613522	15	3/C	#1	compressed	tape				
613523	15	3/C	#1	compressed	tape				
613520	15	3/C	2/0	compressed	tape				
613521	15	3/C	3/0	compressed	tape	*blank indicates*			
613526	15	3/C	3/0	compressed	tape	*not a stock item or not available*			
613530	15	3/C	350	compact	tape	*from any source*			
613531	15	3/C	500	sector	tape				f
010128	15	3/C	500	compact	tape				
613532	15	3/C	500	compact	tape				
623640	15	1/C	500	compact	tape				
012735	15	3-1/C	500	compressed	FS				
613533	15	3/C	750	sector	tape				f
613534	15	3/C	750	compact	tape				
623670	15	3-1/C	1000	compressed	FS				
623650	27	3-1/C+2N	#8	compressed	tape	686440	012662	686424	a b
602027	28	1/C	#1	class B	RW/CN	686416	NR	686417	e
613540	28	3/C+3G	#1	compressed	Tape	686416	012662	686417	b
602025	28	1/C+1N	1/0	solid	RW/CN	686416	NR	686417	e
012098	28	1/C+1N	1/0	solid	RW/CN	686416	012687	686417	d
602044	28	1/C	350	class B	RW/CN				
012099	28	1/C	350	compact	FS				
613613	28	1/C	350	compact	DW				
613543	28	3/C+3G	350	compact	tape				
012100	28	1/C	500	compact	FS				
613615	28	1/C	500	compact	DW				
613645	28	1/C	500	compressed	FS	*blank indicates*			
602119	28	1/C	750	compact	DW	*not a stock item or not available*			
613618	28	1/C	750	compact	DW	*from any source*			
974050	28	3/C	750	sector	tape				f
012101	28	1/C	750	compact	FS				
012102	28	1/C	1000	compact	FS				
613619	28	1/C	1000	compact	DW				
613655	28	1/C	1000	compressed	FS				
none	35	1/C	350	compressed	tape				
623660	35	1/C	750	compact	DW				
623655	35	1/C	1000	compact	tape				

NR = Not required

5. Material List, continued

Elbow kit (body, compression connector for 1/0 AWG, probe contact, probe installation tool, silicone lubricant, hold down bail assembly, and instruction sheet)

Stock No. **686440**

figure 5.1

Elbow kit (body, compression connector, probe contact, probe installation tool, silicone lubricant, hold down bail assembly, and instruction sheet)

Stock No. **686416**

figure 5.2

Jacket sealing/shield adapter kit for tape shielded cable (cold shrink tube, mastic seal strips, 5/8-inch by 3/4-inch diameter constant force spring, preformed ground/bleeder wire, Scotch No. 13 semi-con tape, and instruction sheet)

Stock No. **012662**

figure 5.3

Jacket sealing kit for jacketed concentric neutral cable (cold shrink tube, mastic seal strips, and instruction sheet)

Stock No. **012687**

figure 5.4

5. Material List, continued

Compression connector for #8 AWG stranded copper conductor, Kerite

Stock No. **686424**

figure 5.6

Compression connector for 1/0 AWG solid aluminum conductor

Stock No. **686417**

figure 5.7

6. Connector Accessories (Optional)

Elbow mud cover

Stock No. **686467**

figure 6

7. Replacement Parts

Probe contact. This probe contact may be used in either Cooper Power Systems or Thomas & Betts (Elastimold) elbows.

Stock No. **686426**

figure 7.1

Hold down bail assembly, spring loaded, for Cooper Power Systems elbow. This assembly does not work with Thomas & Betts (Elastimold) elbows.

Stock No. **012435**

figure 7.2

Hold down bail assembly, spring loaded, for Thomas & Betts (Elastimold) elbow. This assembly does not work with Cooper Power Systems elbows.

Stock No. **012587**

figure 7.3

8. Tools

Information relating to tool type, die number, and number of crimps is provided with the connector.

9. References

386-2006; "Standard for Separable Insulated Connector Systems for Power Distribution Systems Above 600 V"; IEEE; 2006

6864.15; "Connector (Elbow) Separable, Insulated, Deadbreak, 200-Ampere"; *Material Standards*; SCL

B100-02024; *Components Master Catalog, 5 kV-35 kV Electrical Distribution Systems, Specifiers Guide*; Cooper Power Systems

E6-1.0/NGE-70; "Properties of Medium Voltage Cables"; *Construction Guidelines*; SCL

PG-CA-0506; *Cable Accessories for 5 kV-35 kV Distribution Systems, Product Selection Guide*; Elastimold

Shipek, John; SCL Standards Engineer, subject matter expert and originator of U5-16.05 (john.shipek@seattle.gov)

U5-2.81/NSP-290; "Primary Cable Preparation, General"; *Construction Guidelines*; SCL

SEPARABLE CONNECTOR (T-BODY), 125 kV BIL, DEADBREAK

1. Scope

This construction guideline identifies the material required to install a 600 A (or 900 A), 125 kV BIL, deadbreak, separable connector (T-body) on the end of a piece of primary cable.

The material list includes all the parts necessary to complete an installation. Optional connector accessories and replacement parts are also identified. The material list has been organized to be cable specific.

600 A assemblies use all-aluminum compression connectors. 900 A assemblies require all-copper compression connectors.

The material needed to trifurcate 3/C type cable and seal the exposed tape shield from the trifurcation point to the T-body metallic shield adapter/jacket sealing kit is outside the scope of this guideline. Refer to NSP-110 for this information.

Paper-insulated-lead-covered (PILC) cable and sector cable are outside the scope of this guideline.

Cable preparation work procedures and connector installation procedures are outside the scope of this guideline.

For cable technical data, refer to E6-1.0/NGE-70.

For general cable preparation procedures, refer to U5-2.81/NSP-290.

For cutback lengths and connector assembly and installation procedures, refer to the specific instructions that were provided with the connector.

For connector continuous, fault closing, and short-time current ratings and overload capability, refer to IEEE 386.

Deadbreak connectors are a subcategory of separable connectors, which is a subcategory of dead front cable accessories.

2. Application

A separable connector (T-body) is a fully insulated and shielded system for terminating and electrically connecting an insulated power cable to electrical apparatus, other power cables, or both, so designed that the electrical connection can be readily established or broken by engaging or separating the connector at the operating interface.

The separable connectors described in this construction guideline are intended for use on the following three-phase, 60 Hz systems:

- 13.8 kV, 3-wire, delta, where load consists of network type transformers with delta-connected primary and grounded wye-connected secondary
- 26.4 kV, 4-wire, solidly-grounded, wye-connected

STANDARDS COORDINATOR	STANDARDS SUPERVISOR	UNIT DIRECTOR
John Shipek	John Barnett	Richard Kent

2. Application, continued

The Seattle neighborhood of First Hill is a network constructed with a mix of 125 kV BIL and 150 kV BIL material and equipment. New installations should incorporate 125 kV BIL connectors, where possible.

Basic T-body is not equipped with a capacitive test point. Test points are provided by utilizing insulated plugs with test point caps, Stock Number 686356.

This guideline may be used by engineers to design connector systems and create bills of material or by field crews when performing actual installations.

Only qualified electrical workers shall install and operate separable connector systems.

3. Separable Connector Technical Description

voltage class	25 kV
common names	
	T-Body
	600 amp elbow
	hammerhead
	BLR
SCL Material Standard	6863.15
manufacturers	various
maximum voltage rating (ph-g)	
delta systems	8.3 kV RMS
grounded wye systems	15.2 kV RMS
BIL	125 kV crest
continuous current rating	
with all-aluminum compression connector	600 A RMS
with all-copper compression connector	900 A RMS
short-time current rating	25 kA RMS, symmetrical
IEEE 386 interface	Figure 11

4. General Examples

Example 4.1: T-body installed on one phase of a 3/C, tape shielded type cable. Note: for this type of cable, a jacket seal/metallic metallic shield adapter kit and an 8 inch length of heat shrinkable tubing, Stock Number 737455, is required to seal the elbow, the adapter kit leads, and the tubing installed over the jacketless cable. The cold shrink tube supplied with the seal kit is too short in this application and is not used.

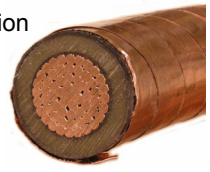

figure 4.1

4. General Examples

Example 4.2: T-body installed on bare, round wire, concentric neutral cable. Note: for this type of cable, a jacket seal/metallic shield adapter kit is required.

figure 4.2

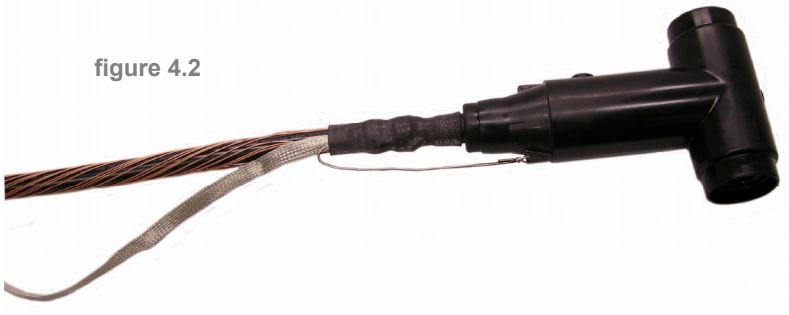

Example 4.3: T-body installed on jacketed, round wire, concentric neutral cable. Note: for this type of cable, a jacket seal/metallic shield adapter kit is required.

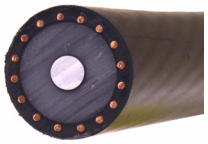

figure 4.3

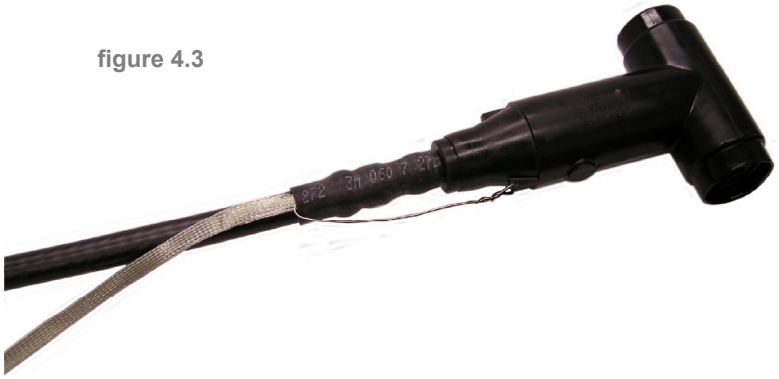

Example 4.4: T-body installed on flat strap shielded type cable. Note: for this type of cable, a jacket seal/metallic shield adapter kit is required.

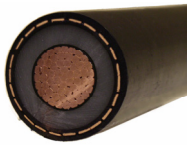

figure 4.4

Example 4.5: T-body installed on drain wire shielded type cable. Note: for this type of cable, a jacket seal/metallic shield adapter kit is required. Drain wire shielded type cable is no longer purchased. Example is provided for comparison only.

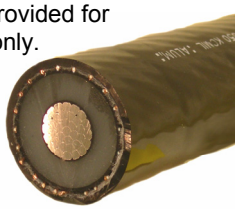

figure 4.5

5. Material List, Table 5.1

Stock Number	Rated Circuit Voltage, kV	Type	Size, AWG/ kcmil	Shape	Shield Type	required T-Body (only) Stock No.	required Cable Adapter Stock No.	required Additional Part Stock No.	required - select one 600 A Comp. Conn. Stock No.	900 A Comp. Conn. Stock No.	Table 5.1 Notes
1	2	3	4	5	6	7	8	9	10	11	12
613212	5	1/C	#6	compressed	tape	na	na	na	na	na	c
613222	5	1/C	350	compressed	tape	686350	na	686512	686366	686916	a
601025	5	1/C	500	class B	DW	686350	686361	686512	010135	686918	a
613522	15	3/C	#1	compressed	tape	686350	686310	012662	686375	686913	a d
613523	15	3/C	#1	compressed	tape	686350	686310	012662	686375	686913	a d
613520	15	3/C	2/0	compressed	tape	686350	686315	012662	686377	na	a d
613521	15	3/C	3/0	compressed	tape	686350	686315	012662	686378	686914	a d
613526	15	3/C	3/0	compressed	tape	686350	686315	012662	686378	686914	a d
613530	15	3/C	350	compact	tape	686350	686361	686512	686366	686916	a d
613531	15	3/C	500	sector	tape	na	na	na	na	na	b
010128	15	3/C	500	compact	tape	686350	686365	686512	686362	686917	a d
613532	15	3/C	500	compact	tape	686350	686365	686512	686362	686917	a d
623640	15	1/C	500	compact	tape	686350	686365	686512	686362	686917	a
012735	15	3-1/C	500	compressed	FS	686350		686512	010135	686918	a
613533	15	3/C	750	sector	tape	na	na	na	na	na	b
613534	15	3/C	750	compact	tape	686350	686348	686512	686349	686919	a d
623670	15	3-1/C	1000	compressed	FS	686350	686372	686512	686398	686920	a
623650	27	3-1/C+2N	#8	compressed	tape	na	na	na	na	na	c
602027	28	1/C	#1	class B	RW/CN	686350	686370	012662	686375	686913	a
613540	28	3/C+3G	#1	compressed	Tape	686350	686370	012662	686375	686913	a d
602025	28	1/C+1N	1/0	solid	RW/CN	686350	686370	012662	687375	686913	a
012098	28	1/C+1N	1/0	solid	RW/CN	686350	686370	012662	686375	686913	a
602044	28	1/C	350	class B	RW/CN	686350	686352	686512	686351	na	a
012099	28	1/C	350	compact	FS	686350	686365	686512	686366	686916	a
613613	28	1/C	350	compact	DW	686350	686365	686512	686366	686916	a
613543	28	3/C+3G	350	compact	tape	686350	686365	686512	686366	686916	a d
012100	28	1/C	500	compact	FS	686350	686352	686512	686362	686917	a
613615	28	1/C	500	compact	DW	686350	686352	686512	686362	686917	a
613645	28	1/C	500	compressed	FS	686350	686352	686512	686362	686917	a
602119	28	1/C	750	compact	DW	686350	686348	686512	686349	686919	a
613618	28	1/C	750	compact	DW	686350	686348	686512	686349	686919	a
974050	28	3/C	750	sector	tape	na	na	na	na	na	b
012101	28	1/C	750	compact	FS	686350	686348	686512	686349	686919	a
012102	28	1/C	1000	compact	FS	686350	010137	686512	686398	686920	a
613619	28	1/C	1000	compact	DW	686350	010137	686512	686398	686920	a
613655	28	1/C	1000	compressed	FS	686350	010137	686512	010136	012128	a
none	35	1/C	350	compressed	tape	686350	na	686512	686351	na	a
623660	35	1/C	750	compact	DW	686350	na	686512	686349	686919	a
623655	35	1/C	1000	compact	tape	686350	na	686512	686398	686920	a

5. Material List, continued

Table 5.1 Legend:

na Not a stock item or not available from any source

Table 5.1 Notes:

For 600 A assemblies, select all-aluminum compression connector from column 10. For 900 A assemblies, select all-copper compression connector from column 11.

If a cable adapter requires excessive force to install, halt the procedure and obtain a better fitting adapter. Contact Standards if an error in Table 5.1 is discovered. Cable adapters should be neither loose fitting nor excessively snug.

a. Required additional part consists of a jacket seal/metallic shield adapter kit that provides cable jacket-to-accessory sealing and grounding.

b. Separable connectors are not commercially available for sector cable. Connections must be hand taped.

c. Cable adapters are not commercially available for conductor smaller than #1 AWG.

d. The material needed to trifurcate 3/C type cable and seal the exposed tape shield from the trifurcation point to the T-body metallic shield adapter/jacket sealing kit is outside the scope of this guideline. Refer to NSP-110 for this information. An 8 inch length of heat shrinkable tubing, Stock Number 737455 is required to seal the tubing over the jacketless cable. The cold shrink tube supplied with the seal kit is too short in this application and not used.

The following figures are provided for general identification.

T-Body, 125 kV BIL (body, instructions)

Stock No. **686350**

figure 5.1

Cable adapter, 350 kcmil, 125 kV BIL

Stock No. **686361**

figure 5.2

5. Material List, continued

Jacket sealing/shield adapter kit standard fault duty (cold shrink tube, mastic seal strips, 5/8-inch by 3/4-inch diameter constant force spring, preformed ground/bleeder wire, Scotch No. 13 semi-con tape, and instruction sheet).

Stock No. **012662**

figure 5.3

Jacket sealing/shield adapter kit high fault duty (cold shrink tube, mastic seal strips, 3/4-inch by 1-1/2-inch diameter constant force spring, U-shaped (double tail) braid, Scotch No. 13 semi-con tape, and instruction sheet).

Stock No. **686512**

figure 5.4

Compression connector, all-aluminum, for 350 kcmil compressed

Stock No. **686351**

figure 5.5

Compression connector, all-copper, for 500 kcmil compact

Stock No. **686917**

figure 5.6

Heat shrinkable tubing, heavy wall, sealent coated, minimum expanded ID 2 inches

Stock No. **737455**

figure 5.7

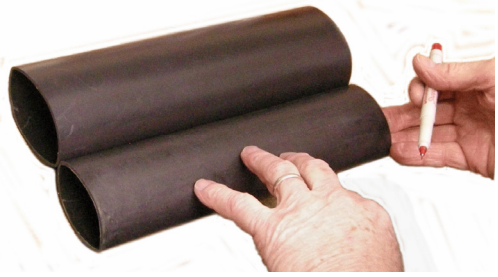

6. Connector Accessories (Optional)

Refer to Material 6863.17 for a complete list of J-boxes, T-connectors, standoff plugs, caps, bushing wells, parking stands, inserts, feed-thru bushings, and test probes that may be used with the 600 A version of this separable connector.

Refer to Material 6863.37 for a complete list of accessories that may be used with the 900 A version of this separable connector.

Insulated plug with test point cap

Stock No. **686356**

figure 6

7. Replacement Parts

Stock Number	Description, in.
686514	Constant force spring, 5/8 x 0.75 OD relaxed
686516	Constant force spring, 5/8 x 1.00 OD relaxed
012127	Constant force spring, 5/8 x 1.50 OD relaxed

8. Tools

Information relating to tool type, die number, and number of crimps is provided with the connector.

9. References

386-2006; “Standard for Separable Insulated Connector Systems for Power Distribution Systems Above 600 V”; IEEE

6863.15; “Separable Connector, Deadbreak, Dielectric Components, 125 kV BIL”; *Material Standards*; SCL

6863.17; “Accessories, Separable Connector, 600 A, 125 kV BIL, Deadbreak”; *Material Standards*; SCL

6863.37; “Accessories, Separable Connector, 900 A, 125 kV BIL, Deadbreak”; *Material Standards*; SCL

B100-02024; *Components Master Catalog, 5 kV-35 kV Electrical Distribution Systems, Specifiers Guide*; Cooper Power Systems

E6-1.0/NGE-70; “Properties of Medium Voltage Cables”; *Construction Guidelines*; SCL

NSP-110; “Trifurcation of Three Conductor Polyethylene Cable, 13 & 28 kV With and Without Neutral/Ground Wires”; *Construction Guidelines*; SCL

PG-CA-0506; *Cable Accessories for 5 kV-35 kV Distribution Systems, Product Selection Guide*; Elastimold

Richards Product Catalog; Richards Manufacturing Company

Shipek, John; SCL Standards Engineer, subject matter expert and originator of U5-17.05 (john.shipek@seattle.gov)

U5-2.81/NSP-290; “Primary Cable Preparation, General”; *Construction Guidelines*; SCL

SEPARABLE CONNECTOR (T-BODY), 150 kV BIL, DEADBREAK

1. Scope

This construction guideline identifies the material required to install a 600 A (or 900 A), 150 kV BIL, deadbreak, separable connector (T-body) on the end of a piece of primary cable.

The material list includes all the parts necessary to complete an installation. Optional connector accessories and replacement parts are also identified. The material list has been organized to be cable specific.

600 A assemblies use all-aluminum compression connectors. 900 A assemblies require all-copper compression connectors.

The material needed to trifurcate 3/C type cable and seal the exposed tape shield from the trifurcation point to the T-body metallic shield adapter/jacket sealing kit is outside the scope of this guideline. Refer to NSP-110 for this information.

Paper-insulated-lead-covered (PILC) cable and sector cable are outside the scope of this guideline.

Cable preparation work procedures and connector installation procedures are outside the scope of this guideline.

For cable technical data, refer to E6-1.0/NGE-70.

For general cable preparation procedures, refer to U5-2.81/NSP-290.

For cutback lengths and connector assembly and installation procedures, refer to the specific instructions that were provided with the connector.

For connector continuous, fault closing, and short-time current ratings and overload capability, refer to IEEE 386.

Deadbreak connectors are a subcategory of separable connectors, which is a subcategory of dead front cable accessories.

2. Application

A separable connector (T-body) is a fully insulated and shielded system for terminating and electrically connecting an insulated power cable to electrical apparatus, other power cables, or both, so designed that the electrical connection can be readily established or broken by engaging or separating the connector at the operating interface.

The separable connectors described in this construction guideline may be used on the following three-phase, 60 Hz systems:

- 13.8 kV, 3-wire, delta, where load consists of network type transformers with delta-connected primary and grounded wye-connected secondary
- 26.4 kV, 4-wire, solidly-grounded, wye-connected

2. Application, continued

The Seattle neighborhood of First Hill is a network constructed with a mix of 125 kV BIL and 150 kV BIL material and equipment. New installations should incorporate 125 kV BIL connectors, where possible.

Refer to Construction Guideline U5-17.05/NSP-304 for the preferred separable connector system rated 125 kV BIL.

Basic T-body is not equipped with a capacitive test point. Test points are provided by utilizing insulated plugs with test point caps, Stock Number 687270.

This guideline may be used by engineers to design connector systems and create bills of material or by field crews when performing actual installations.

Only qualified electrical workers shall install and operate separable connector systems.

3. Separable Connector Technical Description

voltage class	35 kV
common names	
	T-Body
	600 amp elbow
	hammerhead
	BLR
SCL Material Standard	6863.25
manufacturers	various
maximum voltage rating (ph-g)	21.1 kV RMS, grounded WYE systems
BIL	150 kV crest
continuous current rating	
with all-aluminum compression connector	600 A RMS
with all-copper compression connector	900 A RMS
short-time current rating	25 kA RMS, symmetrical
IEEE 386 interface	Figure 13

4. General Examples

Example 4.1: T-body installed on one phase of a 3/C, tape shielded type cable. Note: for this type of cable, a jacket seal/metallic metallic shield adapter kit and an 8 inch length of heat shrinkable tubing, Stock Number 737455, is required to seal the elbow, the adapter kit leads, and the tubing installed over the jacketless cable. The cold shrink tube supplied with the seal kit is too short in this application and is not used.

figure 4.1

4. General Examples

Example 4.2: T-body installed on bare, round wire, concentric neutral cable. Note: for this type of cable, a jacket seal/metallic shield adapter kit is required.

figure 4.2

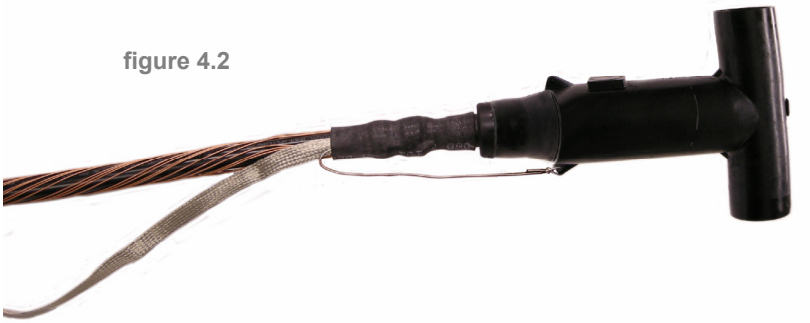

Example 4.3: T-body installed on jacketed, round wire, concentric neutral cable. Note: for this type of cable, a jacket seal/metallic shield adapter kit is required.

figure 4.3

Example 4.4: T-body installed on flat strap shielded type cable. Note: for this type of cable, a jacket seal/metallic shield adapter kit is required.

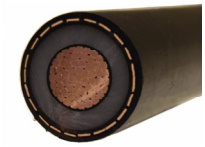

figure 4.4

Example 4.5: T-body installed on drain wire shielded type cable. Note: for this type of cable, a jacket seal/metallic shield adapter kit is required. Drain wire shielded type cable is no longer purchased. Example is provided for comparison only.

figure 4.5

5. Material List, Table 5.1

Stock Number	Rated Circuit Voltage, kV	Type	Size, AWG/ kcmil	Shape	Shield Type	required T-Body (only) Stock No.	required Cable Adapter Stock No.	required Additional Part Stock No.	required - select one 600 A Comp. Conn. Stock No.	900 A Comp. Conn. Stock No.	Table 5.1 Notes
1	2	3	4	5	6	7	8	9	10	11	12
613212	5	1/C	#6	compressed	tape						c
613222	5	1/C	350	compressed	tape						
601025	5	1/C	500	class B	DW						
613522	15	3/C	#1	compressed	tape						
613523	15	3/C	#1	compressed	tape						
613520	15	3/C	2/0	compressed	tape						
613521	15	3/C	3/0	compressed	tape						
613526	15	3/C	3/0	compressed	tape		*blank indicates*				
613530	15	3/C	350	compact	tape		*not a stock item or not available*				
613531	15	3/C	500	sector	tape		*from any source*				b
010128	15	3/C	500	compact	tape						
613532	15	3/C	500	compact	tape						
623640	15	1/C	500	compact	tape						
012735	15	3-1/C	500	compressed	FS						
613533	15	3/C	750	sector	tape						b
613534	15	3/C	750	compact	tape						
623670	15	3-1/C	1000	compressed	FS						
623650	27	3-1/C+2N	#8	compressed	tape						c
602027	28	1/C	#1	class B	RW/CN	687060	687019	012662	686375	686913	a
613540	28	3/C+3G	#1	compressed	Tape	687060	687019	012662	686375	686913	a d
602025	28	1/C+1N	1/0	solid	RW/CN	687060	687019	012662	687375	686913	a
012098	28	1/C+1N	1/0	solid	RW/CN	687060	687019	012662	686375	686913	a
602044	28	1/C	350	class B	RW/CN	687060	687020	686512	686351	na	a
012099	28	1/C	350	compact	FS	687060	687020	686512	686366	686916	a
613613	28	1/C	350	compact	DW	687060	687020	686512	686366	686916	a
613543	28	3/C+3G	350	compact	tape	687060	687020	686512	686366	686916	a d
012100	28	1/C	500	compact	FS	687060	687025	686512	686362	686917	a
613615	28	1/C	500	compact	DW	687060	687025	686512	686362	686917	a
613645	28	1/C	500	compressed	FS	687060	687025	686512	686362	686917	a
602119	28	1/C	750	compact	DW	687060	687028	686512	686349	686919	a
613618	28	1/C	750	compact	DW	687060	687028	686512	686349	686919	a
974050	28	3/C	750	sector	tape	na	na	na	na	na	b
012101	28	1/C	750	compact	FS	687060	687035	686512	686349	686919	a
012102	28	1/C	1000	compact	FS	687060	687035	686512	686398	686920	a
613619	28	1/C	1000	compact	DW	687060	687035	686512	686398	686920	a
613655	28	1/C	1000	compressed	FS	687060	687035	686512	010136	012128	a
none	35	1/C	350	compressed	tape	687060	na	686512	686351	na	a
623660	35	1/C	750	compact	DW	687060	687030	686512	686349	686919	a
623655	35	1/C	1000	compact	tape	687060	na	686512	686398	686920	a

5. Material List, continued

Table 5.1 Legend:

na Not a stock item or not available from any source

Table 5.1 Notes:

For 600 A assemblies, select all-aluminum compression connector from column 10. For 900 A assemblies, select all-copper compression connector from column 11.

If a cable adapter requires excessive force to install, halt the procedure and obtain a better fitting adapter. Contact Standards if an error in Table 5.1 is discovered. Cable adapters should be neither loose fitting nor excessively snug.

a. Required additional part consists of a jacket seal/metallic shield adapter kit that provides cable jacket-to-accessory sealing and grounding.

b. Separable connectors are not commercially available for sector cable. Connections must be hand taped.

c. Cable adapters are not commercially available for conductor smaller than #1 AWG.

d. The material needed to trifurcate 3/C type cable and seal the exposed tape shield from the trifurcation point to the T-body metallic shield adapter/jacket sealing kit is outside the scope of this guideline. Refer to NSP-110 for this information. An 8 inch length of heat shrinkable tubing, Stock Number 737455 is required to seal the tubing over the jacketless cable. The cold shrink tube supplied with the seal kit is too short in this application and not used.

The following figures are provided for general identification.

T-Body, 150 kV BIL (body, instructions)

Stock No. **687060**

figure 5.1

Cable adapter, 750 kcmil, 150 kV BIL

Stock No. **687028**

figure 5.2

5. Material List, continued

Jacket sealing/shield adapter kit standard fault duty (cold shrink tube, mastic seal strips, 5/8-inch by 3/4-inch diameter constant force spring, preformed ground/bleeder wire, Scotch No. 13 semi-con tape, and instruction sheet).

Stock No. **012662**

figure 5.3

Jacket sealing/shield adapter kit high fault duty (cold shrink tube, mastic seal strips, 3/4-inch by 1-1/2-inch diameter constant force spring, U-shaped (double tail) braid, Scotch No. 13 semi-con tape, and instruction sheet).

Stock No. **686512**

figure 5.4

Compression connector, all-aluminum, for 350 kcmil compressed

Stock No. **686351**

figure 5.5

Compression connector, all-copper, for 500 kcmil compact

Stock No. **686917**

figure 5.6

Heat shrinkable tubing, heavy wall, sealent coated, minimum expanded ID 2 inches

Stock No. **737455**

figure 5.7

6. Connector Accessories (Optional)

Refer to Material 6863.27 for a complete list of connecting plugs, insulating plugs, and caps that may be used with this separable connector.

Insulated plug with test point cap

Stock No. **687270**

figure 6

7. Replacement Parts

Stock Number	Description, in.
686514	Constant force spring, 5/8 x 0.75 OD relaxed
686516	Constant force spring, 5/8 x 1.00 OD relaxed
012127	Constant force spring, 5/8 x 1.50 OD relaxed

8. Tools

Information relating to tool type, die number, and number of crimps is provided with the connector.

9. References

386-2006; “Standard for Separable Insulated Connector Systems for Power Distribution Systems Above 600 V”; IEEE

6863.25; “Separable Connector, Deadbreak, Dielectric Components, 150 kV BIL”; *Material Standards*; SCL

6863.27; “Accessories, Separable Connector, 600 A, 150 kV BIL, Deadbreak”; *Material Standards*; SCL

B100-02024; *Components Master Catalog, 5 kV-35 kV Electrical Distribution Systems, Specifiers Guide*; Cooper Power Systems

E6-1.0/NGE-70; “Properties of Medium Voltage Cables”; *Construction Guidelines*; SCL

NSP-110; “Trifurcation of Three Conductor Polyethylene Cable, 13 & 28 kV With and Without Neutral/Ground Wires”; *Construction Guidelines*; SCL

PG-CA-0506; *Cable Accessories for 5 kV-35 kV Distribution Systems, Product Selection Guide*; Elastimold

Richards Product Catalog; Richards Manufacturing Company

Shipek, John; SCL Standards Engineer, subject matter expert and originator of U5-17.10/NSP-305 (john.shipek@seattle.gov)

U5-2.81/NSP-290; “Primary Cable Preparation, General”; *Construction Guidelines*; SCL

U5-17.05/NSP-304; “Separable Connector (T-Body), 125 kV BIL, Deadbreak”; *Construction Guidelines*; SCL

TERMINATION, 200 kV BIL, COLD SHRINK

1. Scope

This construction guideline identifies the material required to install a 200 kV BIL, Class 1, cold shrink termination on the end of a piece of primary cable.

The material list includes all the parts necessary to complete an installation. The material list has been organized to be cable specific.

The material needed to trifurcate 3/C type cable and seal the exposed tape shield from the trifurcation point to the T-body metallic shield adapter/jacket sealing kit is outside the scope of this guideline. Refer to NSP-110 for this information.

Paper-insulated-lead-covered (PILC) cable and sector cable are outside the scope of this guideline.

For cable technical data, refer to E6-1.0/NGE-70.

For general cable preparation procedures, refer to U5-2.81/NSP-290.

For cutback lengths and termination installation procedures, refer to the specific instructions that were provided with the item.

For termination test and classification information, refer to IEEE 48.

Cold shrink terminations are a subcategory of live front cable accessories.

2. Application

Class 1, high-voltage cable terminations provide electric stress control for the cable insulation shield terminus, complete external leakage insulation between the cable conductor(s) and ground, and a seal to the end of the cable against the entrance of the external environment. Product may be installed indoors or outdoors on cable systems rated 5 kV to 35 kV.

A cable termination by itself cannot be assigned a design or nominal current or ampacity rating since this parameter is completely dependent upon the type and material of the cable conductor, the thickness and type of cable insulation, and the anticipated maximum ambient temperature of the medium surrounding the cable termination.

This guideline may be used by engineers to create bills of material or by field crews when performing actual installations.

3. Cable Termination Technical Description

nominal insulation class (ph-ph)	35 kV RMS
common names	cable termination
	terminator
SCL Material Standard	6865.1
technology	cold shrink
manufacturer	3M
BIL	200 kV crest
continuous current rating	dependent on the type of cable and ambient conditions
IEEE 48 termination class	1A

standards coordinator	standards supervisor	unit director
John Shipek	John Shipek	Pamela S. Johnson

4. General Example

Termination installed on tape shielded type cable.

figure 4

5. Material List

Table 5.1 Legend:

na Not a stock item or not available from any source

Table 5.1 Notes:

Except where noted, kits contain material for one cable end.

a. Termination kit Stock Number 686532 contains a silicone rubber termination, two sealing mastic strips, and an instruction sheet.

b. Termination kits Stock Numbers 012125, 012126, 686531, and 686534 contain a silicone rubber termination, a high-ampacity ground braid, a constant force spring, two sealing mastic strips, and an instruction sheet.

c. Termination kit Stock, Number 012125, contains material for ***one*** cable end. Termination kit, Stock Number 686534, is the exact same as 012125, except it contains material for ***three*** cable ends.

The following figures are provided for general identification.

Termination kit, cold shrink, for jacketed or bare concentric neutral cable (silicone rubber termination, two sealing mastic strips, and an instruction sheet).

Stock No. **686532**

figure 5.1

Termination kit, cold shrink, for tape, drain wire, or flat strap shielded cable (silicone rubber termination, a high-ampacity ground braid, a constant force spring, two sealing mastic strips, and an instruction sheet).

Stock No. **012125**

figure 5.2

Compression connector, pigtail, for 750 kcmil compact conductor

Stock No. **686075**

figure 5.3

5. Material List, Table 5.1, continued

Stock Number	Rated Circuit Voltage, kV	Type	Size, AWG/ kcmil	Shape	Shield Type	required Termination Kit Stock No.	required Pigtail Connector Stock No.	Table 5.1 Notes
1	2	3	4	5	6	7	8	9
613212	5	1/C	#6	compressed	tape	na	na	
613222	5	1/C	350	compressed	tape	686531	650578	b
601025	5	1/C	500	class B	DW	na	650579	
613522	15	3/C	#1	compressed	tape	na	na	
613523	15	3/C	#1	compressed	tape	na	na	
613520	15	3/C	2/0	compressed	tape	na	na	
613521	15	3/C	3/0	compressed	tape	na	na	
613526	15	3/C	3/0	compressed	tape	na	na	
613530	15	3/C	350	compact	tape	na	na	
613531	15	3/C	500	sector	tape	na	na	
010128	15	3/C	500	compact	tape	na	na	
613532	15	3/C	500	compact	tape	na	na	
623640	15	1/C	500	compact	tape	012125	650579	b c
012735	15	3-1/C	500	compressed	FS	012125	650579	b c
613533	15	3/C	750	sector	tape	na	na	
613534	15	3/C	750	compact	tape	na	na	
623670	15	3-1/C	1000	compressed	FS	012125	010320	b c
623650	27	3-1/C+2N	#8	compressed	tape	686531	686076	b
602027	28	1/C	#1	class B	RW/CN	686532	686056	a
613540	28	3/C+3G	#1	compressed	Tape	na	na	
602025	28	1/C+1N	1/0	solid	RW/CN	686532	686056	a
012098	28	1/C+1N	1/0	solid	RW/CN	686532	686056	a
602044	28	1/C	350	class B	RW/CN	686532	650578	a
012099	28	1/C	350	compact	FS	012125	650578	b c
613613	28	1/C	350	compact	DW	012125	650578	b c
613543	28	3/C+3G	350	compact	tape	na	na	
012100	28	1/C	500	compact	FS	012125	650579	b c
613615	28	1/C	500	compact	DW	012125	650579	b c
613645	28	1/C	500	compressed	FS	012125	650579	b c
602119	28	1/C	750	compact	DW	012125	686075	b c
613618	28	1/C	750	compact	DW	012125	686075	b c
974050	28	3/C	750	sector	tape	na	na	
012101	28	1/C	750	compact	FS	012125	686075	b c
012102	28	1/C	1000	compact	FS	012126	010320	b
613619	28	1/C	1000	compact	DW	012126	010320	b
613655	28	1/C	1000	compressed	FS	012126	010320	b
none	35	1/C	350	compressed	tape	na	686078	
623660	35	1/C	750	compact	DW	012126	010320	b
623655	35	1/C	1000	compact	tape	012126	010320	b

6. Tools

Information relating to tool type, die number, and number of crimps is provided with the connector.

7. References

48-1996; "Standard Test Procedures and Requirement for Alternating-Current Cable Terminations 2.5 kV through 765 kV"; IEEE

6772.00; "Connectors, Compression, Pigtail Adapter"; *Material Standards*; SCL

6865.10; "Terminators – High Voltage Cable"; *Material Standards*; SCL

E6-1.0/NGE-70; "Properties of Medium Voltage Cables"; *Construction Guidelines*; SCL

NSP-110; "Trifurcation of Three Conductor Polyethylene Cable, 13 and 28 kV With and Without Neutral/Ground Wires"; *Network Construction Guidelines*; SCL

"QT-III Cold Shrink Silicon Rubber Termination (with High Ampacity Ground Connection) Instruction Sheet, 78-8119-6020-8 (B) 1997"; 3M; 1997

"QT-III Cold Shrink Silicon Rubber Termination (with High Ampacity Ground Connection) Instruction Sheet, 78-8119-6022-4 (B) 1997; 3M; 1997

"QT-III Cold Shrink Silicon Rubber Termination (with High Ampacity Ground Connection) Instruction Sheet, 78-8119-6027-3 (B) 1997"; 3M; 1997

"QT-III Cold Shrink Silicon Rubber Termination (with High-K Stress Relief), Instruction Sheet, 78-8119-6024-0 2004"; 3M; 2004

Shipek, John; SCL Standards Engineer, subject matter expert and originator of U5-26.20/NSP-285 (john.shipek @seattle.gov)

U5-2.81/NSP-290; "Primary Cable Preparation, General"; *Construction Guidelines*; SCL

dummy tab front - U7 - U13

dummy tab back - U7 - U13

CONDUIT RISERS ON POLES

1. General Requirements

All conduits on poles shall be installed in a manner meeting the following requirements:

1.1. Minimum interference with pole and crossarm maintenance.

1.2. Maximum safety for lineworkers.

1.3 .Minimum interference with other utilities on the same pole.

2. Installation

Conduits on poles shall be installed as follows:

2.1. A single conduit smaller than 2 with conductors of less than 750 volts potential may be placed directly on the pole in the crotch of the crossarm (Fig. 2.1)

2.2. A single conduit 2 and larger, or one with conductors of 750 volts or more, shall be spaced out from the pole face 4-1/2 and offset to give 1 clear space between the conduit and the center line of the pole lead. (Fig. 2.2)

2.3. When two conduits are installed they shall be spaced out 4-1/2 from the face of the pole and separated 2 , providing a clear space 1 on each side of the center line of the pole lead. (Fig. 2.3)

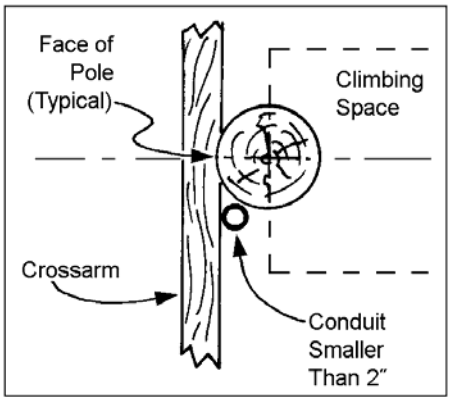

Figure 2.1

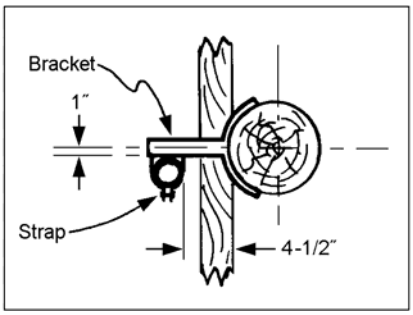

Figure 2.2

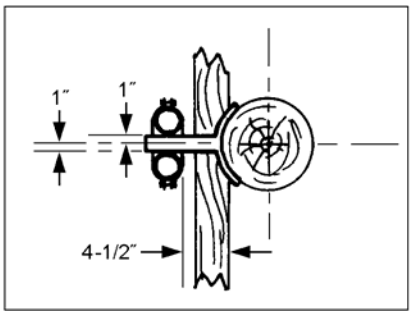

Figure 2.3

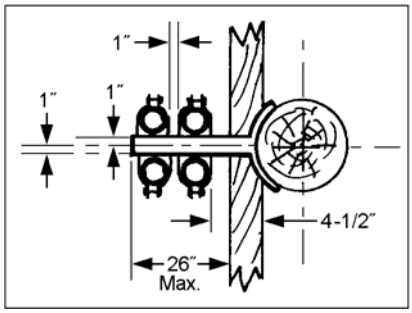

Figure 2.4

2.4. It is preferable to limit the number of conduits to two on a pole, but if more than two are required, they shall be installed as in Fig. 2.4. If two voltages are involved, the higher voltage shall be placed next to the pole.

2.5. The conduit shall have a minimum of one support in each length of conduit.

2.6. On poles with existing conduits, new conduits shall be installed in accordance with this specification. If it is practical, improve the existing conduit installations by moving the pole or conduits.

2.7. Where a telephone company terminal box interferes with conduit installation, Distribution Design will make arrangements for its relocation.

2.8. For grounding details, see SCL Construction Guideline U7-10.9/NDK-120.

2.9. Maximum bracket length shall be 26 inches. The number and size of conduits on a pole is strictly limited to that which can be properly mounted with a 26-inch bracket.

STANDARDS COORDINATOR	STANDARDS SUPERVISOR	UNIT DIRECTOR
Charles L. Shaffer	John Schimmer	Hardin Jay

3. Material Requirements

The following material requirements apply to all conduit riser installations:

3.1. All conduit risers shall be Schedule 80 PVC or Rigid Steel conduit for the first 8-10 feet above the ground line, and shall be Schedule 40 PVC rigid plastic conduit above 8-10 feet. See Construction Guidelines U7-10.1/ NDK-80 and U7-10.2/NDK-90 for steel conduit installation.

3.2. Conduit spaced out from the pole shall be mounted using the following brackets and straps.

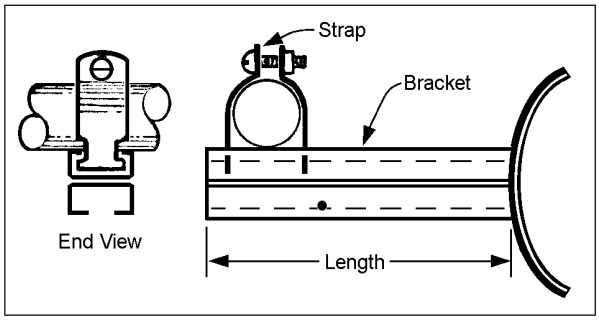

Figure 3.1

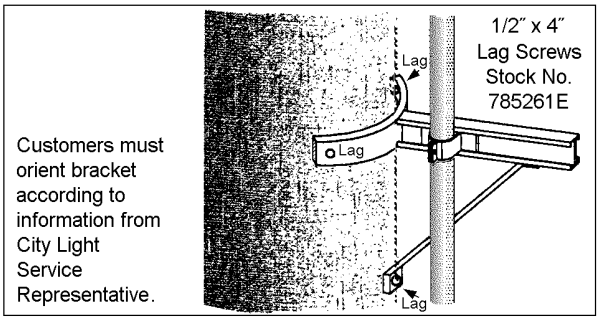

Figure 3.2

Rigid Plastic Conduit PVC

Conduit Size, Inches	Schedule 40 Stock No.	Schedule 80 Stock No.	Adapter Coupling Plastic to Metal	Strap
3/4	734526	–	734540	–
1	734527	–	734541	689760E
1-1/4	734528	–	734542	689761E
1-1/2	734529	738740	734543	689762E
2	734530	738741	734544	689764E
2-1/2	734531	738742	734545	689766E
3	734532	738743	734537	689768E
3-1/2	734533	738744	734538	689770E
4	734523	738745	734539	689772E
5	734524	**DO NOT USE**	734536	689774E

4. Installation of Conduit Support Bracket, with or without a Brace

Install bracket brace for use at top of first 10 ft. length of rigid steel or schedule 80 PVC conduit.

Conduit Support Bracket

	Stock No.	
Length, Inches	**Pole Riser, With Brace**	**Pole Riser, Without Brace**
10-1/2	686792E	686784E
12-1/2	686794E	686786E
18	686796E	686790E
26	012330	–

Reference: SCL Material Standard 6867.5

SEATTLE CITY LIGHT

CONSTRUCTION GUIDELINE

STANDARD NUMBER: **U7-10.1/NDK-80**
PAGE: 1 of 1
SUPERSEDING: August 18, 2006
EFFECTIVE DATE: October 27, 2010

CONDUIT RISER - 600 VOLTS POLE BASE DETAIL

PVC schedule 80 conduit bend is allowed only if there are no more than 225 degrees in bends in the conduit run between access points and if the conduit run does not exceed 150 feet in length.

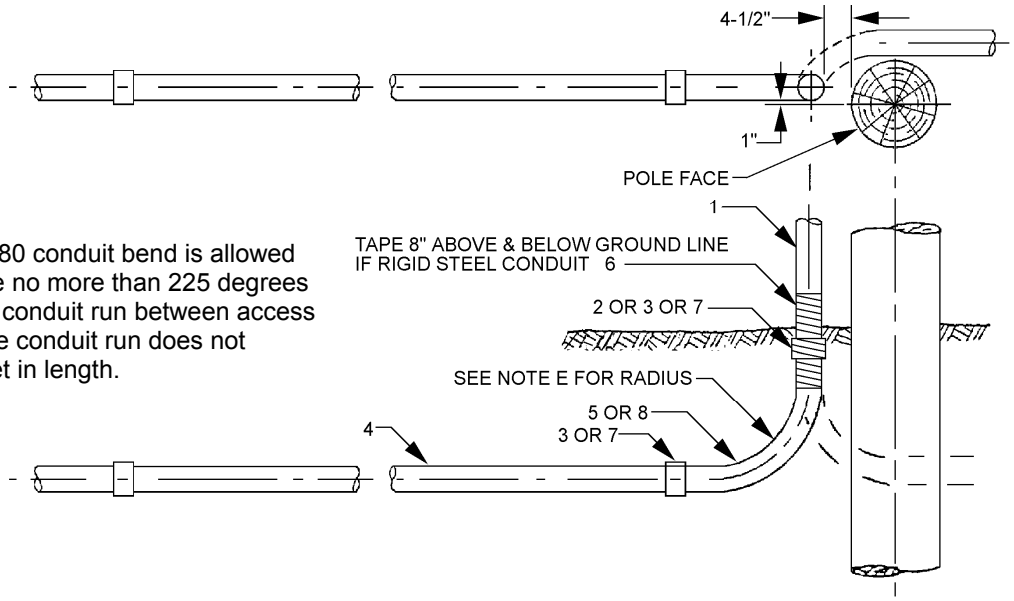

Item	Quantity	Description	Stock No.
1	As required	CONDUIT, Rigid Steel or	734740 thru 734747
		CONDUIT, PVC, Schedule 80	738740 thru 738745
2	As required	COUPLING, Rigid Steel conduit	731095 thru 731102
3	As required	ADAPTER, PVC to Steel	734536 thru 734539 & 734543 thru 734545
4	As required	CONDUIT, PVC Schedule 40	734529 thru 734533 & 734524 and 734523
5	1	ELBOW, Rigid Steel Conduit	734808 thru 734810 & 734820 thru 734824
6	As required	TAPE, Pipe Wrap, vinyl	736730
7	As required	COUPLING, PVC conduit, Schedule 40/80	734516 thru 734522
8	1	ELBOW, PVC schedule 80 Conduit	not in stock

Notes:

A. Before excavation is made at base of pole, the pole shall be temporarily guyed.

B. See Construction Standard U7-10/NDK-70 for conduit riser details.

C. See Construction Standard U7-10.9/NDK-120 for grounding detail, steel conduit only.

D. For pole designation or location of conduit on pole, call Seattle City Light:
north of Denny Way: (206) 615-0600
south of Denny Way: (206) 386-4200

E. Conduit bend radius shall be: 24″ for conduit sizes 2-1/2″ or smaller.
36″ for conduit sizes 3″ or larger.

F. Do not use 5″ Schedule 80 PVC conduit or elbow.

G. After installation, backfill and firmly compact around the pole, bend and riser in accordance with 2005 City of Seattle Standard Specification 2-09.3(1) E.

standards coordinator	standards manager	unit director
Curtis Lu	John Shipek	Pamela S. Johnson

PRIMARY CONDUIT RISER POLE BASE DETAIL

Steel Elbow

Notes for Steel Elbow Installations Only:

See page 2 for Schedule 80 PVC Elbow

A. First ten feet only of conduit up the pole shall be rigid steel unless otherwise specified by Seattle City Light engineer.

B. Tape conduit 8″ above to 8″ below ground line (steel conduit only).

C. Before excavating at pole base, the pole shall be temporarily guyed.

D. See Construction Guideline U7-10/NDK-70 for conduit riser details.

E. See Construction Guideline U7-10.9/NDK-120 for grounding detail, steel conduit only.

F. Do not use 5″ Schedule 80 conduit.

G. For pole designation or location of conduit on pole, call Seattle City Light:
north of Denny Way: (206) 615-0600
south of Denny Way: (206) 386-4200

H. After installation, backfill and firmly compact around the pole, bend and riser in accordance with 2005 City of Seattle Standard Specification 2-09.3 (1) E.

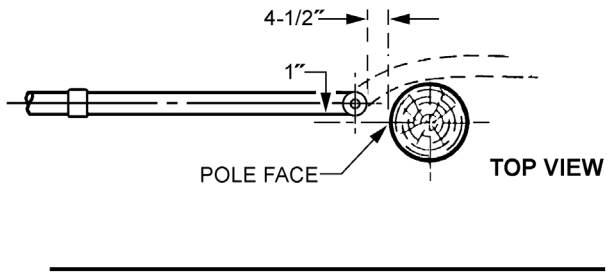

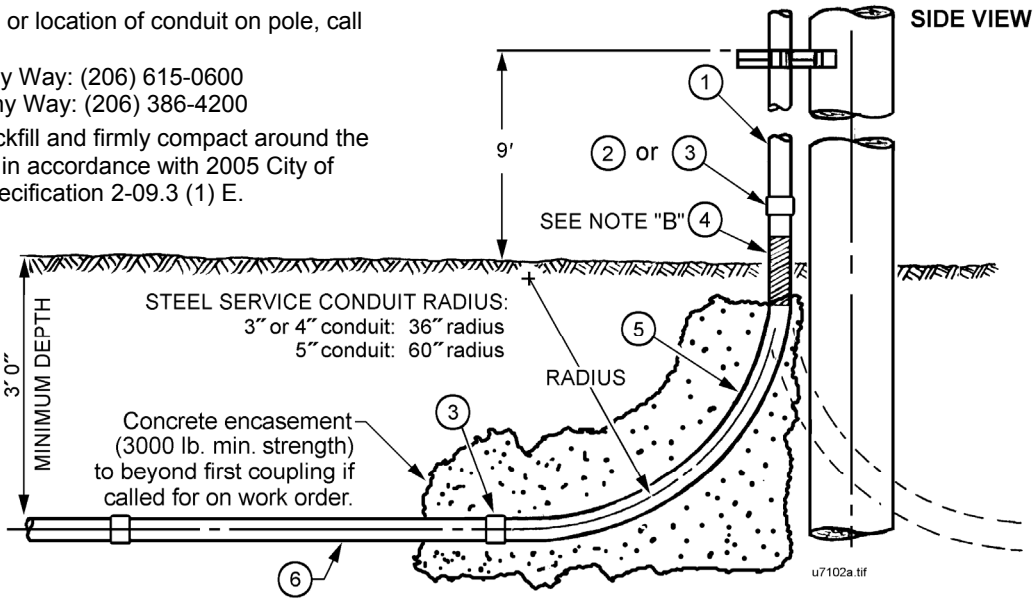

Material List – Steel Elbow

Item	Quantity	Description	Stock Number 3-inch	4-inch	5-inch
1	as required	CONDUIT, Rigid Steel	734743	734745	734747
		or CONDUIT, PVC Schedule 80	738743	738745	–
2	as required	COUPLING, Rigid Steel Conduit	731098	731100	731102
3	as required	CONDUIT ADAPTER, PVC to Steel	734537	734539	734536
4	as required	TAPE, Pipe Wrap, PVC, 2″ X 10 mil	736730	736730	736730
5	as required	ELBOW, Rigid Steel	734822	734824	734826
6	as required	CONDUIT, PVC Schedule 40	734532	734523	734524

STANDARDS COORDINATOR	STANDARDS SUPERVISOR	UNIT DIRECTOR
Chris Detter	John Barnett	John Nierenberg

Schedule 80 PVC Elbow

Notes for Schedule 80 PVC Elbow Installations Only:

See page 1 for Steel Elbow

A. Only first ten feet of conduit up the pole shall be rigid steel unless otherwise specified by Seattle City Light engineer.

B. Before excavating at pole base, the pole shall be temporarily guyed.

C. See Construction Guideline U7-10/NDK-70 for conduit riser details.

D. Do not use 5″ Schedule 80 conduit or elbow.

E. For pole designation or location of conduit on pole, call Seattle City Light:

north of Denny Way: (206) 615-0600

south of Denny Way: (206) 386-4200

F. After installation, backfill and firmly compact around the pole, bend and riser in accordance with 2005 City of Seattle Standard Specification 2-09.3 (1) E.

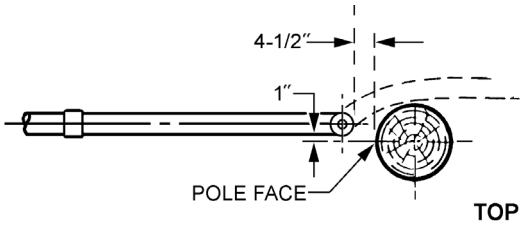

TOP VIEW

SIDE VIEW

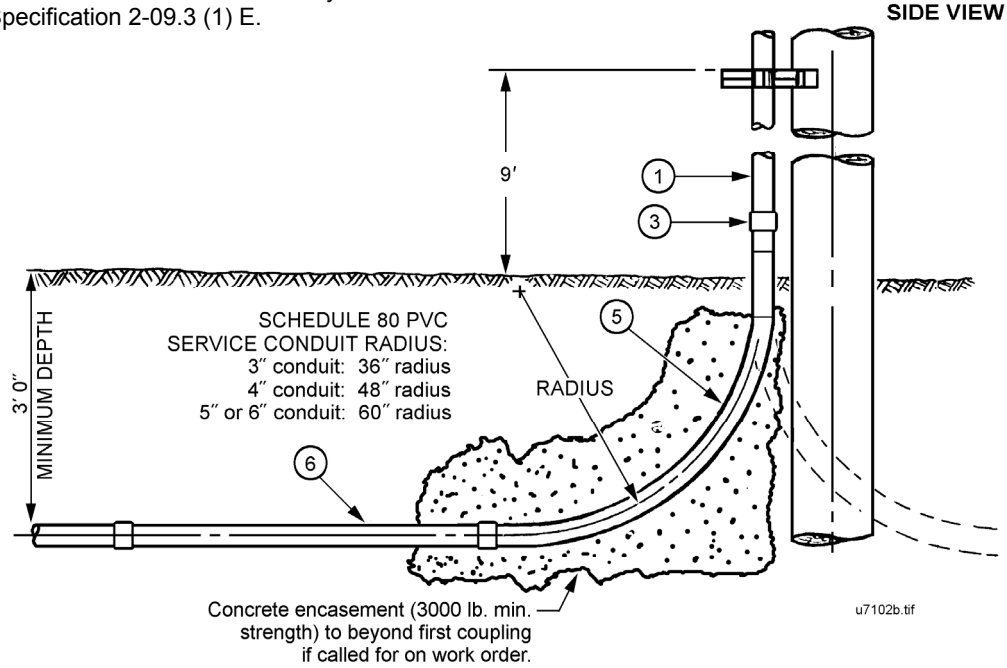

Material List – Schedule 80 PVC Elbow

Item	Quantity	Description	Stock No. 3-inch	Stock No. 4-inch
1	as required	CONDUIT, Rigid Steel	734743	734745
		or CONDUIT, PVC Schedule 80	738743	738745
3	as required	COUPLING, Adapter, PVC to Steel	734537	734539
5	as required	ELBOW, PVC, Schedule 80	non-stock	non-stock
6	as required	CONDUIT, PVC Schedule 40	734532	734523

CABLE IDENTIFICATION

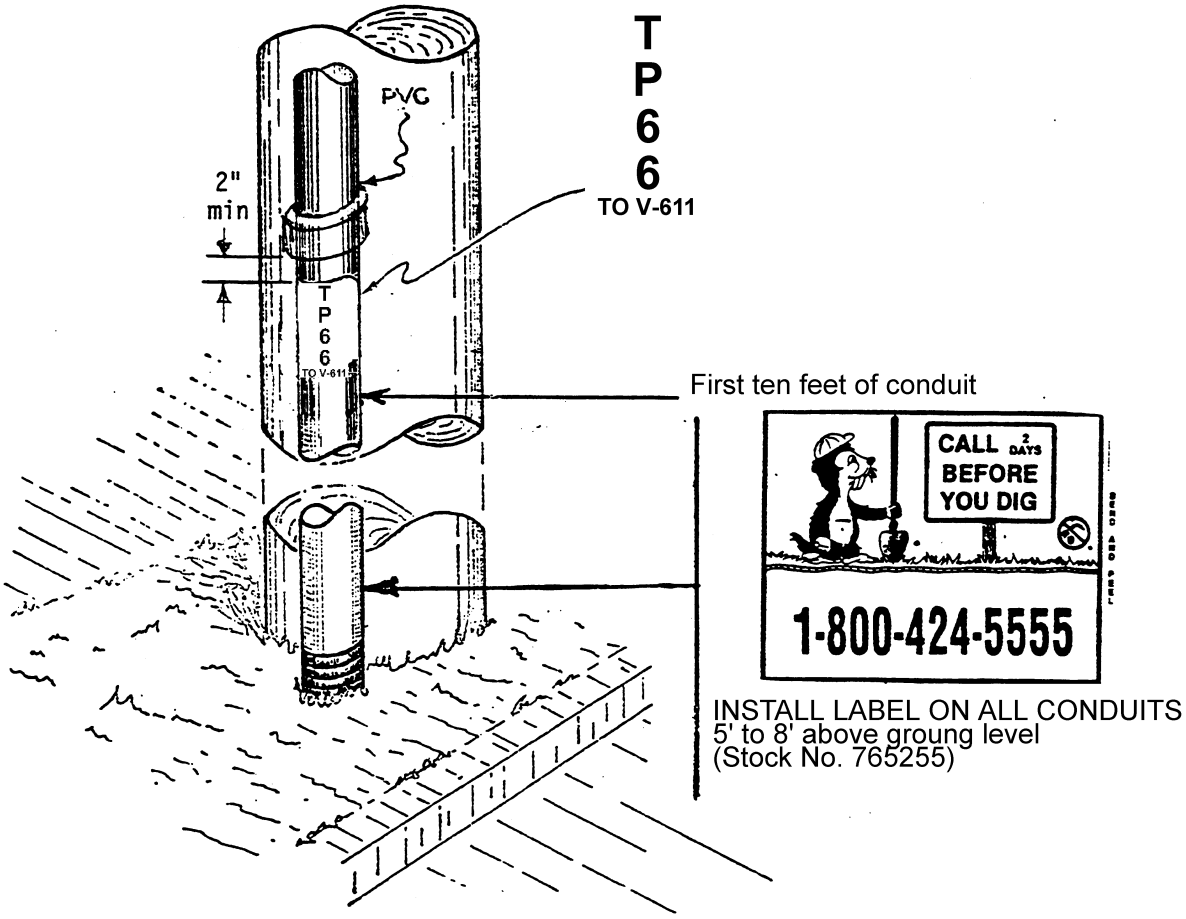

1. Each conduit shall be identified to indicate the following:
   A. Terminal Pole Number.
   B. Cable Destination (service address)
      (handhole or vault number)
      (If cable dips underground directly to another terminal pole, then “26 kV DIP” should be indicated).
   C. Feeder or cable number.
2. Use reflective silver on black adhesive back lettering. Use 1-5/8” high letters & numerals for terminal pole number. Use 3/4” high letters & numerals for cable destination and feeder or cable number.
3. Machines for making the adhesive labels are located at North Service Center, South Service Center and the Transformer Shop.
4. Clean surface of conduit with rag and Citra-Safe cleaner (Stock No. 726156).
5. Face tag away from pole and apply with caution to avoid bubbling.

ORIGINATOR	STANDARDS COORDINATOR	STANDARDS SUPERVISOR	UNIT DIRECTOR
Jim S. Horn	Charles L. Shaffer	John C. Skinner	Betty Robin

GROUNDING CONDUIT RISERS ON POLES

Steel or Schedule 80 PVC Elbow and Steel Conduit, First 10 Feet

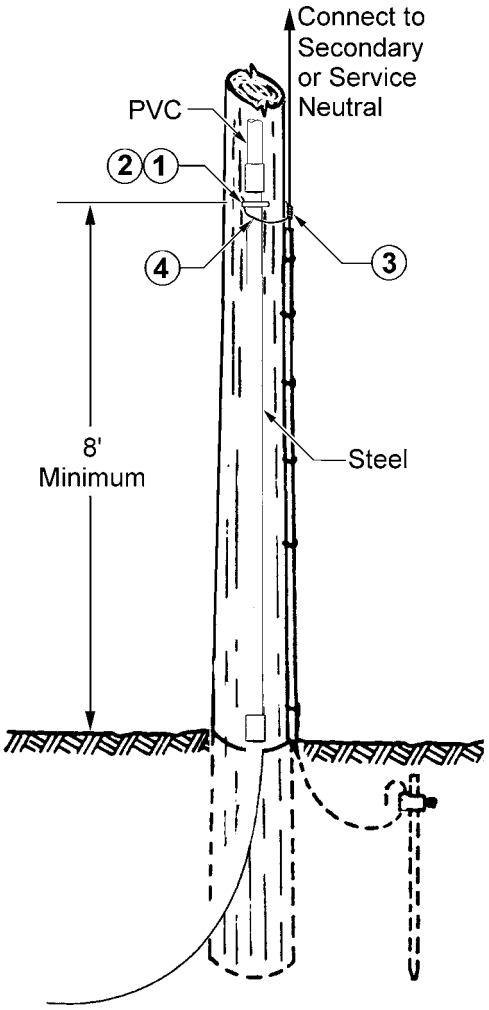

Steel Conduit Notes:

- **A.** Rigid steel conduit shall be grounded just below the top coupling, approximately 8´ to 10´ above ground, as shown.
- **B.** When more than one rigid steel conduit is installed on a pole, one conduit shall be grounded as shown. The conduit supports and straps shall serve as a bonding device between the steel conduits.
- **C.** Connect conduit and pole ground to secondary or service neutral.
- **D.** For standard pole grounding, see Construction Guideline D16-2.
- **E.** See U7-10.2/NDK-90 for primary conduit riser pole base detail.
- **F.** See U7-10/NDK-70 for conduit risers on poles.
- **G.** All equipment grounds shall be #4 copper, polyethylene insulated.
- **H.** This grounding is required per NESC Rule 360C. See also NESC Rules 361 and 362.

Material List

Item	Quantity	Description	Stock No.	Material Standard
1	1	CONNECTOR, Conduit Grounding	676317	6763.1
2	1	CLAMP, Hose, stainless steel	676315E	6763.1
3	1	CONNECTOR, Split Bolt, #4 to #4	668864E	6688.7
4	3 ft.	WIRE, #4 bare Cu., SD	610208	6102.2

STANDARDS COORDINATOR	STANDARDS SUPERVISOR	UNIT DIRECTOR
Charles L. Shaffer	John C. Rimmer	Hardie Jay

Steel Elbow and Non-Metalic Conduit, First 10 Feet

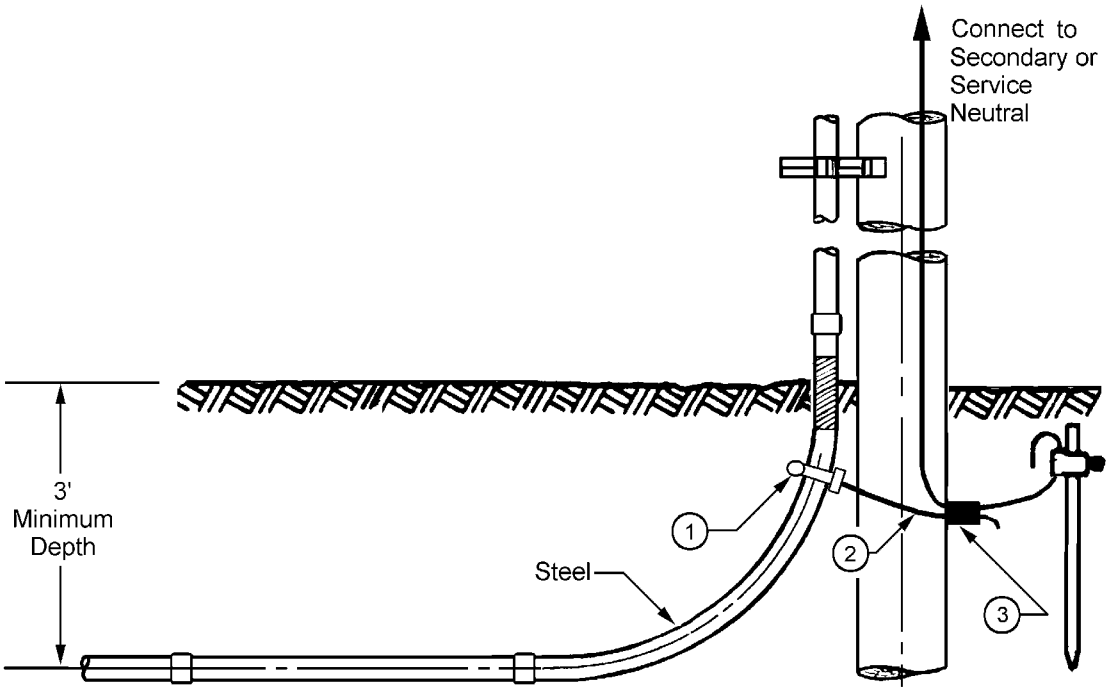

Steel Elbow and Non-Metalic Conduit Notes:

A. Rigid steel conduit elbow shall be grounded below ground, as shown, and connect to secondary or service neutral.

B. When multiple conduits are installed on the pole, all metallic conduit shall be grounded.

C. For standard pole grounding, see Construction Guideline D16-2.

D. All equipment grounds shall be #4 copper.

E. See U7-10.2/NDK-90 for primary conduit riser pole base detail.

F. See U7-10/NDK-70 for conduit risers on poles.

G. All equipment grounds shall be #4 copper, polyethylene insulated.

Material List

Item	Quantity	Description		Stock No.	Material Standard
1	As Required	CLAMP, Conduit Grounding	3″	676285	6762.7
			4″	676286	
			5″	676287	
2	As Required	WIRE, #4 Bare Cu, SD		610208	6102.2
3	As Required	CONNECTOR, Compression, “C”, #4 to #4		677323E	6773.5

577 VAULT TRANSFORMER AND JUNCTION BOX INSTALLATION, GROUNDING AND CONNECTIONS

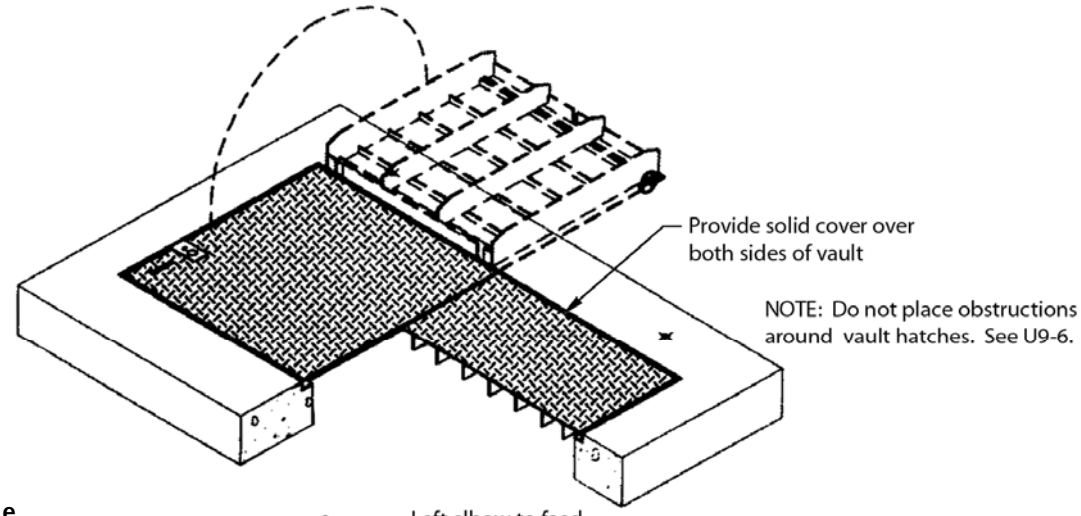

Primary Cable Racking

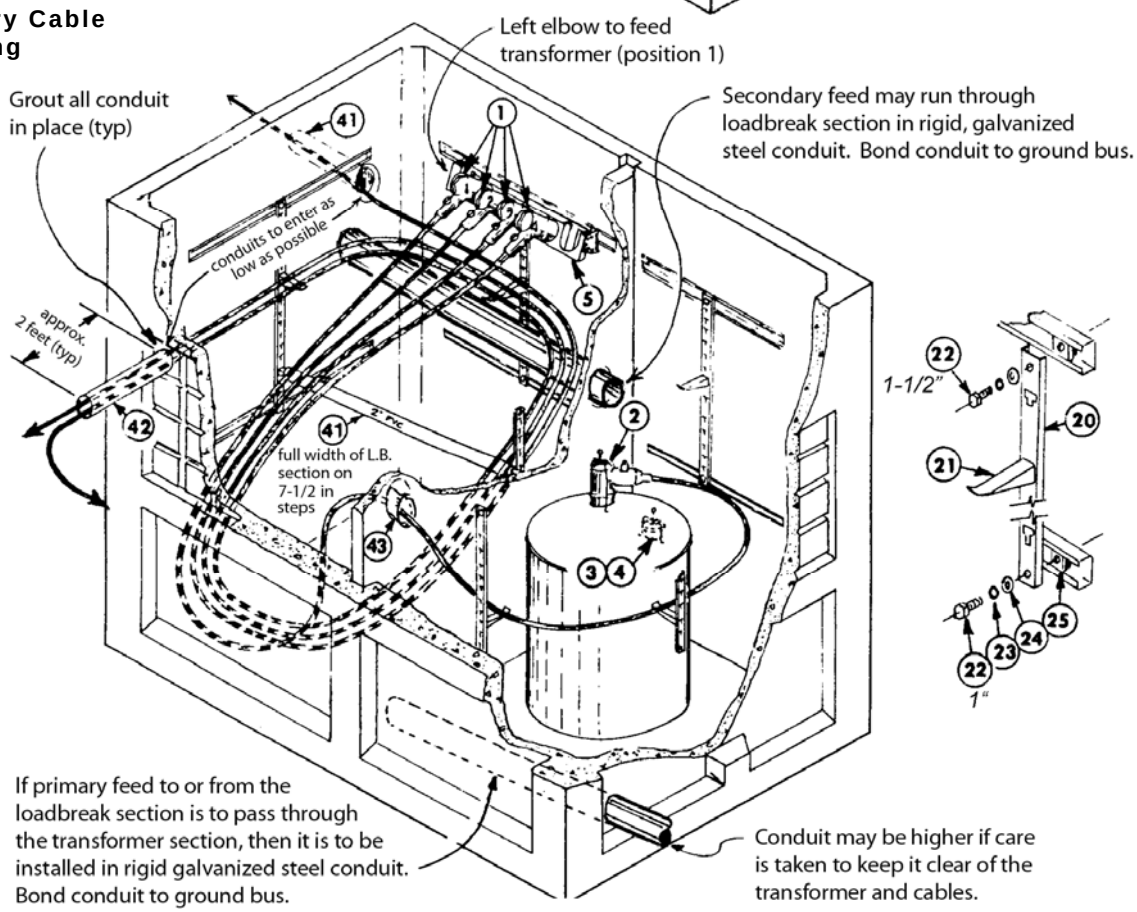

standards coordinator	standards manager	unit director
Curtis Lu	John Shipek	Pam S. Johnson

Grounding

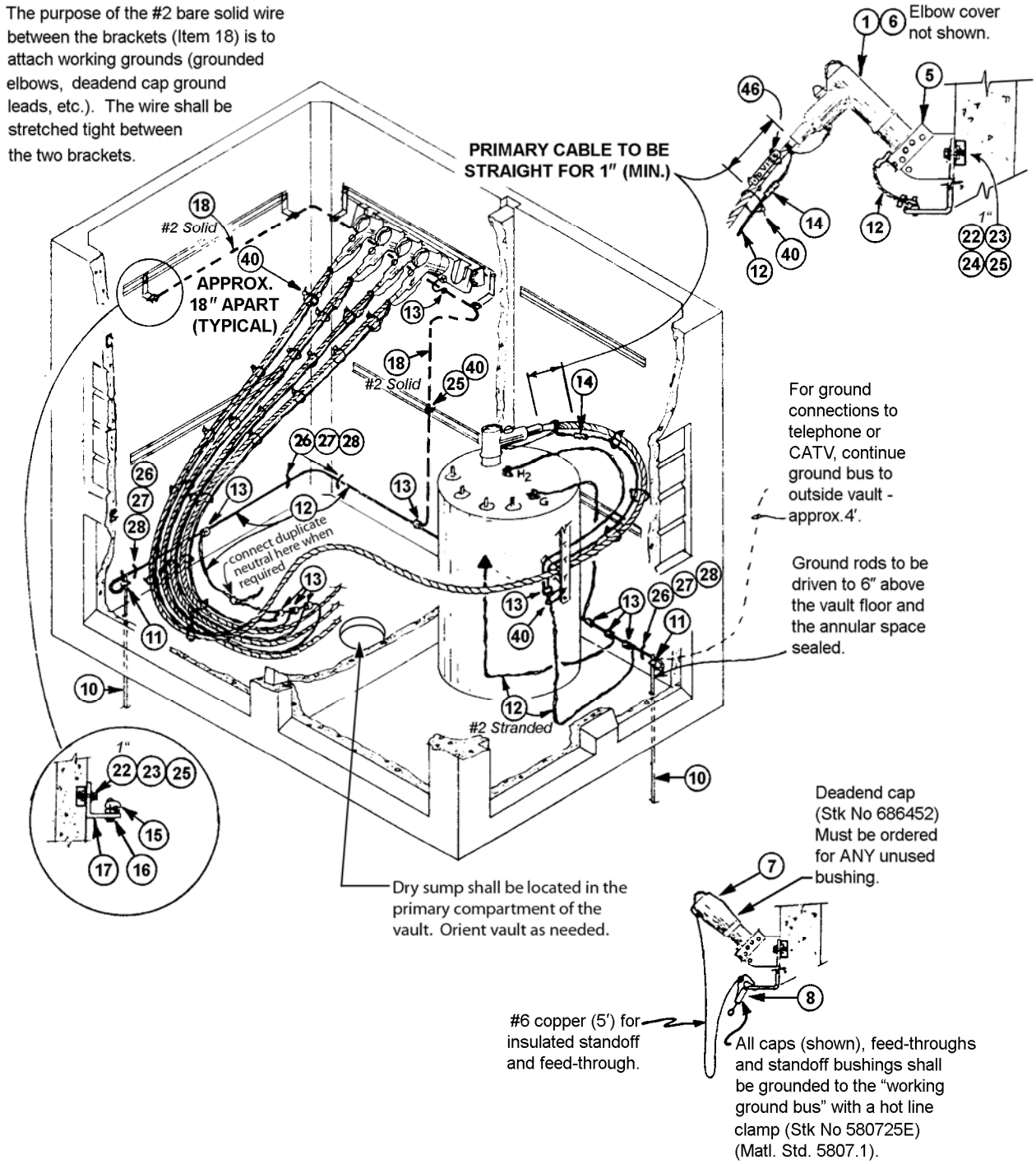
The purpose of the #2 bare solid wire between the brackets (Item 18) is to attach working grounds (grounded elbows, deadend cap ground leads, etc.). The wire shall be stretched tight between the two brackets.
Elbow cover not shown.
PRIMARY CABLE TO BE STRAIGHT FOR 1″ (MIN.)
#2 Solid
APPROX. 18″ APART (TYPICAL)
#2 Solid
connect duplicate neutral here when required
#2 Stranded
For ground connections to telephone or CATV, continue ground bus to outside vault - approx.4′.
Ground rods to be driven to 6″ above the vault floor and the annular space sealed.
Dry sump shall be located in the primary compartment of the vault. Orient vault as needed.
Deadend cap (Stk No 686452) Must be ordered for ANY unused bushing.
#6 copper (5′) for insulated standoff and feed-through.
All caps (shown), feed-throughs and standoff bushings shall be grounded to the "working ground bus" with a hot line clamp (Stk No 580725E) (Matl. Std. 5807.1).

Secondary Cable Racking and Connections

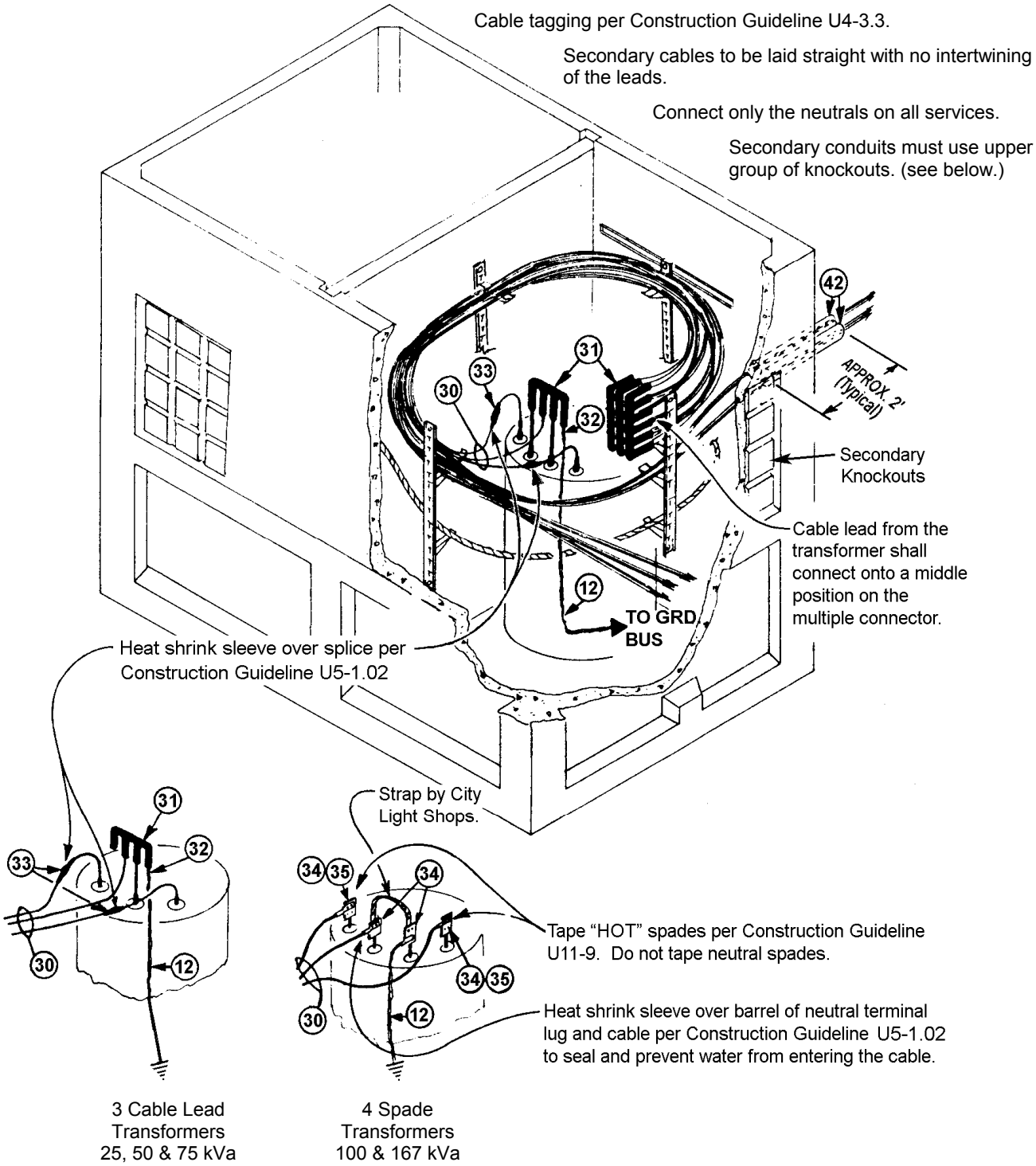

3 Cable Lead Transformers 25, 50 & 75 kVa

4 Spade Transformers 100 & 167 kVa

Material List

Item	Quantity	Description		Stock No.
1	3 or 4	ELBOW, Load Break, 15.2/26.3 kV		686445
2	1	ELBOW, Dead Break, 15.2 kV to ground		686416
3	0 or 1	RECEPTACLE, Dead End Cap, for 2 bushing transformers		686411
4	0 or 1	BAIL, Hold Down for dead end caps		686563
5	1	JUNCTION BOX, Load Break	3 Position	686454
			4 Position	686455
6	3 or 4	COVER, Load Break Elbow, 1 per elbow		686467
7	As required	CAP, Insulating Dead End		686452
8	As required	CLAMP, Hot Line Tap		580725E
10	2	ROD, Ground, 5/8″ x 8′ copper clad		564238E
11	2	CLAMP, Ground Rod, medium duty, 5/8″ to #2		564012E
12	70′ (estimate)	WIRE, #2 Bare, stranded copper, soft drawn		610434
13	9 (estimate)	CONNECTOR, Parallel #2 - #2 crimpet		677326E
14	4 or 5	SPLICE, Straight, copper, #2 - #2, 1 per elbow		677357E
15	4	CONNECTOR, Grounding, cable To flat, #4 - #2/0		676674
16	4	WASHER, Cut, bronze, 3/8″		788024E
17	4	BRACKET, Ground Support, Unistrut		686466
18	12′	WIRE, #2 Bare, solid copper HD		610006
20	7	RACK, 30″ - 18 Hole, galvanized		721666E
21	3 (estimate)	HOOKS, Cable Rack, galvanized steel	4″	7206.2
	7 (estimate)		7-1/2″	7206.2
	–		14″	7206.2
22	13 (estimate)	BOLT, Machine, zinc plated	1/2″ x 1″	784825E
	7 (estimate)	BOLT, Machine, zinc plated	1/2″ x 1-1/2″	784827E
23	20 (estimate)	LOCK WASHER, galvanized	1/2″	584255E
24	13 (estimate)	FLAT WASHER, galvanized	1/2″	585025E
25	20 (estimate)	NUT, Unistrut, P4010	1/2″	723607E
26	4 (estimate)	CABLE TIE, plastic, 0.184″ x 7″		735805E
27	4 (estimate)	MOUNTING BASE, for cable tie, 1/2″		735852
28	4 (estimate)	ANCHOR, Stud Bolt, 1/4″ x 1-3/4″		780091E
30	36′ (estimate)	CABLE, 600 Volt, copper XLP	4/0 For 25 kVA transformers	613735
			4/0 For 50 kVA transformers	613735
			500 for 75 kVA transformers	613740
			500 for 100 kVA transformers	613740
31	3 or 4	CONNECTOR, Multiple, 4 through 8 positions, including connectors, sleeves and covers, as specified, refer to Construction Guideline U5-1.10		-
32	1	CONNECTOR, Lug #2, Cu for transformer ground		012729
33	2 or 0	SPLICE, Straight, copper	2/0 - 2/0	677360
			4/0 - 4/0	677362
			500 - 500	677367
34	0 or 3	TERMINAL, Compression Lug, copper	500 kcmil	677091
	0 or 1		#2 (transformer ground)	677071
35	0 or 8	Nuts, Bolts, Washers and Tape (refer to Construction Guideline U11-9)		–
40	35 (estimate)	TIE STRAP, plastic	7″	735806
	5 (estimate)		14″	735811
41	10′ (estimate)	CONDUIT, PVC, Schedule 40, 2″		734530
42	10′ (estimate)	CONDUIT, PVC, Schedule 40, 3″		734532
43	1	CABLE PROTECTOR, nylon		731801E
46	3 or 4	TAG, Cable Identification		735800E

THREE PHASE LOADBREAK VAULT, 612 AND LARGER

Vault Access: The adjustable top with two galvanized plate doors must provide 34″ x 73-1/2″ clear opening without the use of a center support. Bottom of doors shall provide a flat non-skid working surface. Door construction shall be non-skid. Unistrut inside the four sides of the rectangular risers shall be placed within 2″ maximum of the inside corners. The risers (see right) are used to adjust both hatches to the same height.

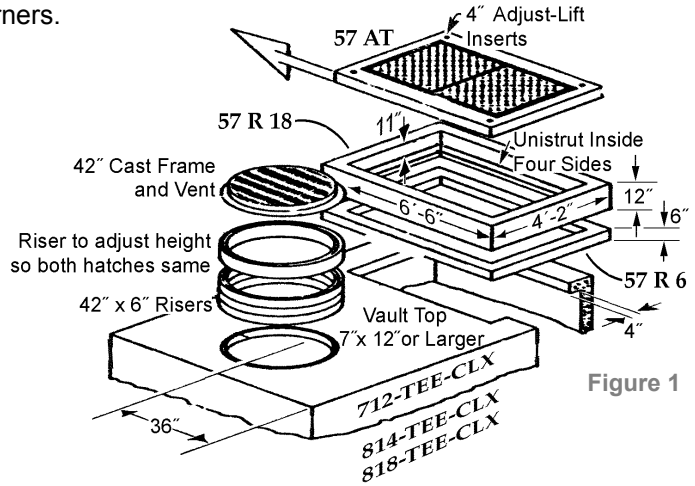

Figure 1

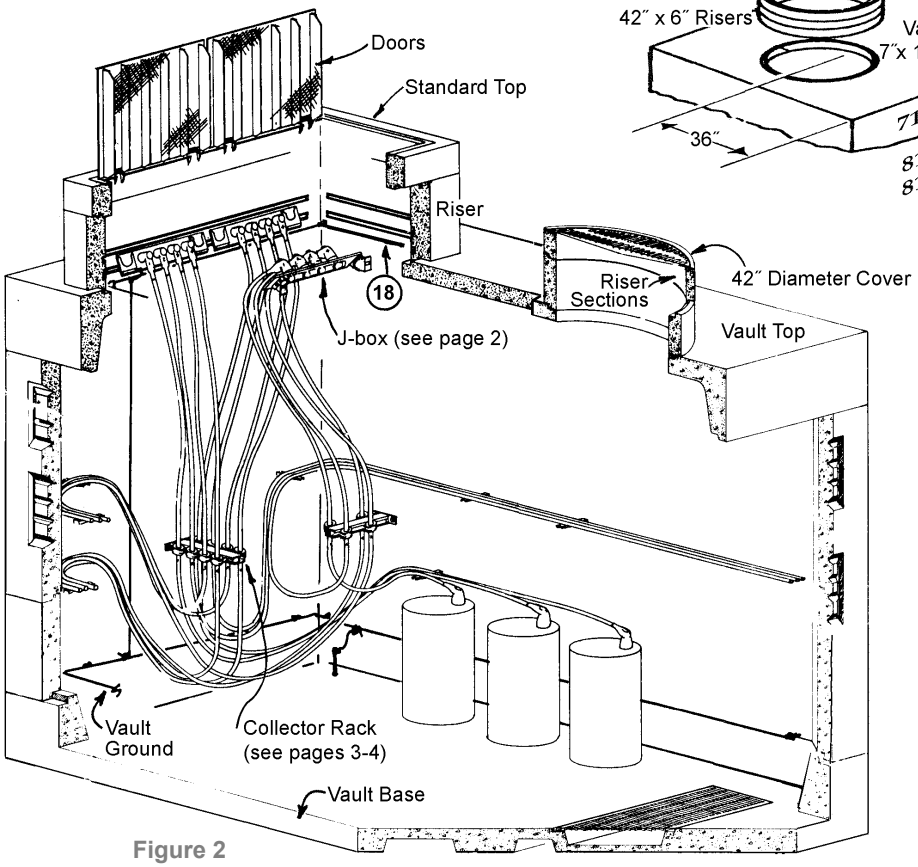

Figure 2
Three Phase Load Break

Caution: High voltage may exist on secondary bushings. Connect center-point ground on lighter and connect teaser to lighter before energizing primaries.

Note: Do not place obstructions around vault hatches. See U9-6.

Related Standards:

U2-11	Install ducts	U4-3	Arrange, protect and support cables
U2-15.1	Install 687 vault and larger	U9-6	Clearance around hatch
U2-12.1	Install sump discharge	U9-7.5	Transformer installation & grounding, 120/240 volt
U10-6	Install vault lighting and sump pump	U9-7.7	Transformer installation & grounding, 120/208 volt

STANDARDS COORDINATOR	STANDARDS SUPERVISOR	UNIT DIRECTOR

J-Box Grounding and Primary Neutral Details

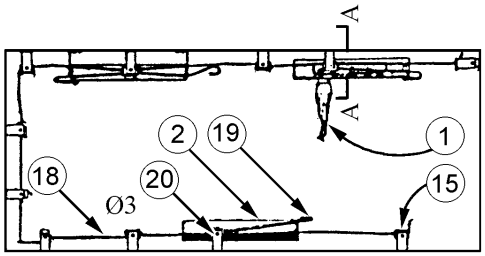

Looking Up

Set opposing J-Boxes toward end of riser away from middle J-box to allow clearances for parking stands.

Figure 3 – Riser with Junction Boxes

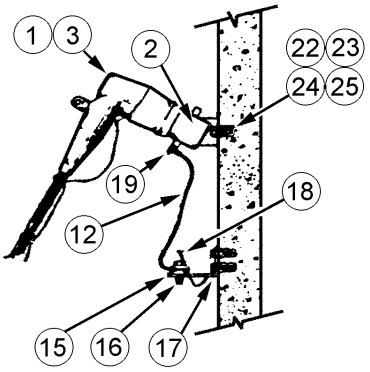

Figure 4 – Section A-A

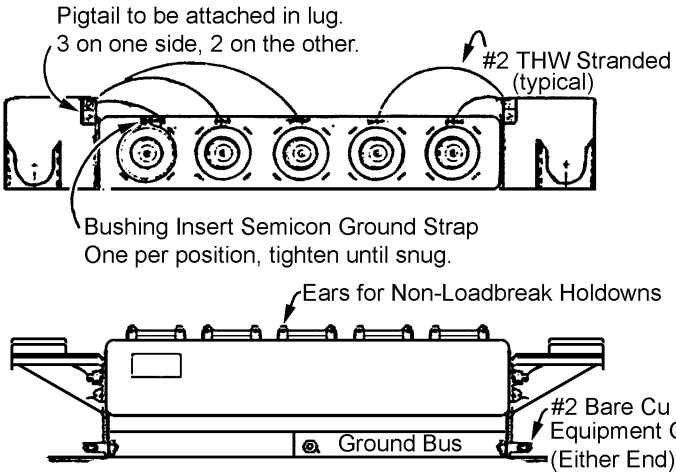

Bushing inserts must be ordered separately.

This J-Box to be installed in 57R18 riser only.

Figure 5 – 5-Way J-Box, Stock No. 686555

Notes:

1. The J-boxes shall be located Ø1, Ø2, Ø3 in clockwise rotation.
2. The positions on the J-boxes shall be 1, 2, 3, 4; left to right when facing the J-box.
3. The #2 bare solid wire for attaching working grounds shall be as tight as possible.

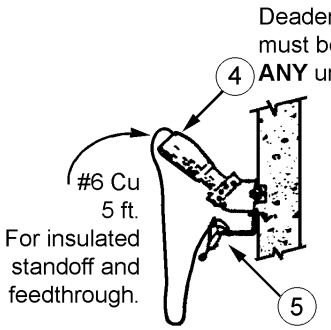

All caps (shown), feedthroughs and standoff bushings shall be grounded to the "working ground bus" with a hot line clamp (Stock No. 580725E).

Figure 6 – Deadend Cap

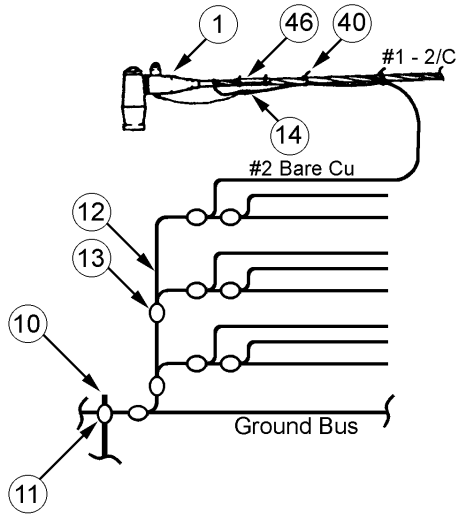

Figure 7 – Neutral Ties from Elbows to Ground Bus

Cable Support Assembly Details

Notes:

1. Bracket (Item 28) to be mounted at 30 inches above vault floor and 2 feet from the corner of the vault.
2. Neutrals return to ground as shown in Figure 11, below.

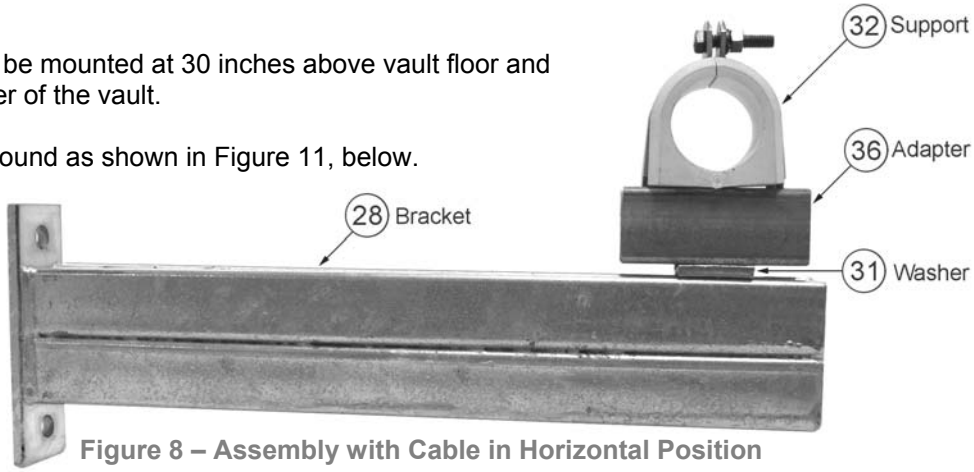

Figure 8 – Assembly with Cable in Horizontal Position

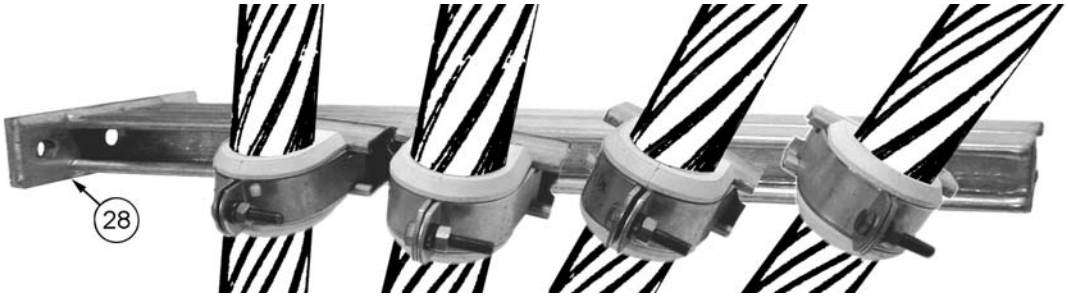

Figure 9 – Assembly with Cable in Vertical Position

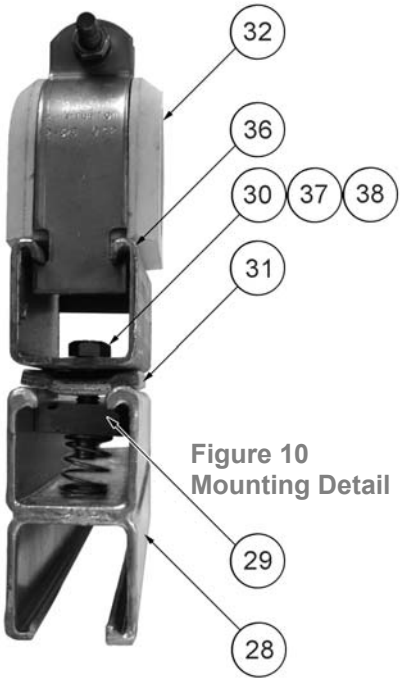

Figure 10
Mounting Detail

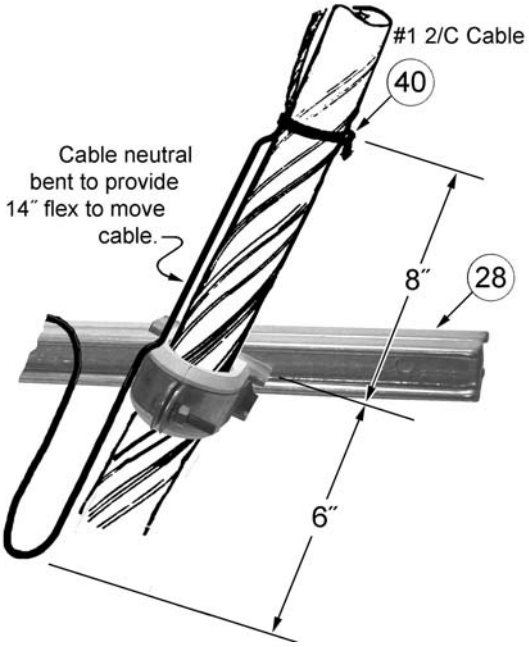

Figure 11 – Neutral Path to Ground

Alternate Method for Cable Support

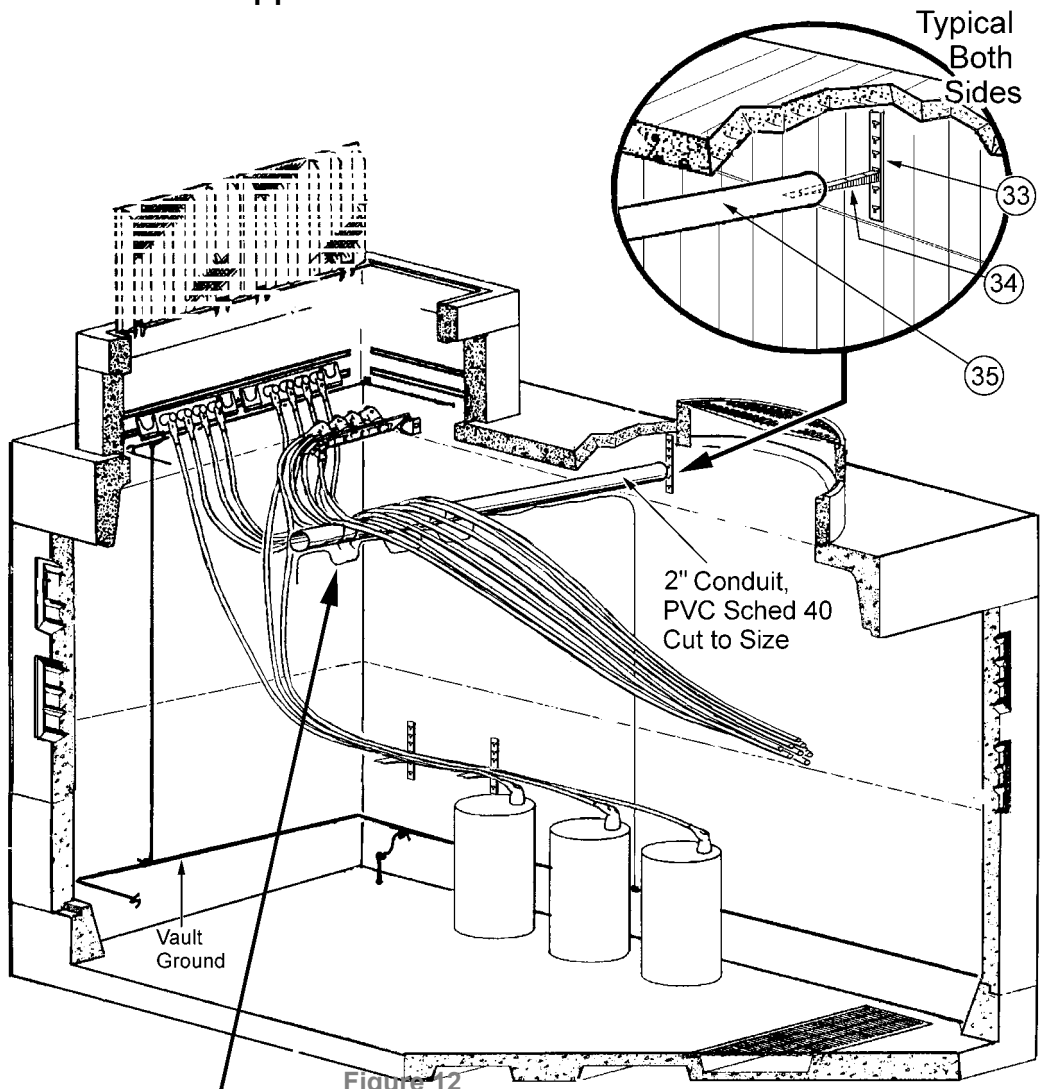

Figure 12

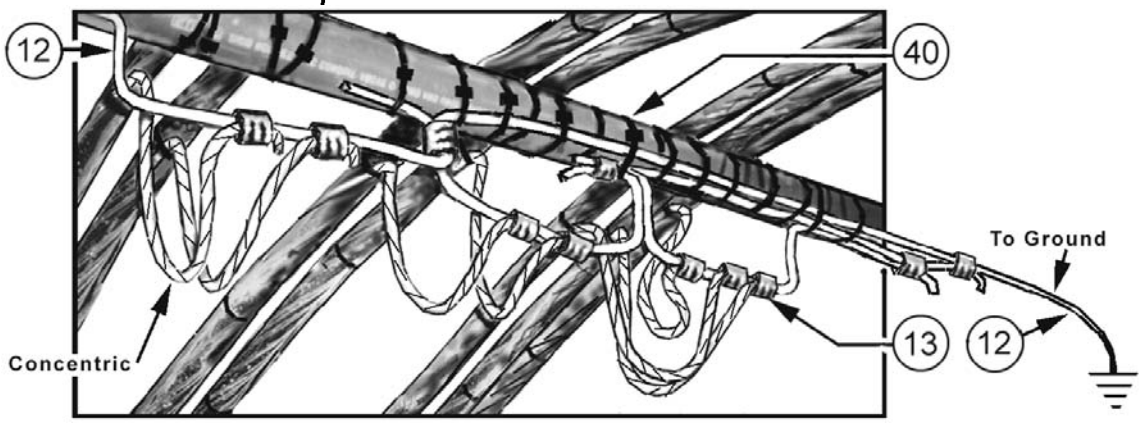

Figure 13

Material List

Item	Quantity	Description		Stock No.
Primary				
1	9, 12, 15	ELBOW, LOADBREAK, 15.2/26.3 kV		686445
2	3	JUNCTION BOX, LOADBREAK,	3 position	686454
			4 position	686455
			5 position	686555 ▲
3	9, 12, 15	COVER, loadbreak elbow (1 per elbow)		686467
4	As required	CAP, Insulating, deadend		686452
5	As required	CLAMP, hot line tap		580725E
6	As required ▲	BUSHING INSERT (not included with 5-position J-box, Item 2)		686449
Grounding				
12	120 ft. (estimate)	WIRE, #2 bare stranded copper soft drawn		610434
13	18 (estimate)	CONNECTOR, parallel #2-#2 crimpet		677326E
14	9, 12, 15	SPLICE, straight, copper, #2-#2 (1 per elbow)		677357E
15	8	CONNECTOR, grounding, cable to flat, #4-#2/0		676674
16	11	WASHER, cut, bronze, 3/8 in.		788024E
17	11	BRACKET, ground support, Unistrut		686466
18	28 ft. (estimate)	WIRE, #2 care solid copper hard drawn		610006
19	3	TERMINAL LUG, compression #2		677071E
20	3	CONNECTOR, grounding, two cables to flat		676694
Racking and Mounting				
22	20 (estimate)	BOLT, machine, cd plated 1/2 in. x 1 in.		784825E
	2 (estimate)	BOLT, machine, cd plated 1/2 in. x 11/2 in.		784827E
23	20 (estimate)	WASHER, lock, 1/2 in. galvanized		584255E
24	20 (estimate)	WASHER, flat, 1/2 in. galvanized		585025E
25	4	ANCHOR, light duty, 1/2 in. -13		780078E
28	2	BRACKET, 18 in.		678005
29	9 or 12	NUT, 3/8 in., with long spring for 1-5/8 in. x 1-5/8 in. strut channel		723609
30	9 or 12	CAP SCREW, steel, hex head, zinc-plated, 3/8 in. x 1-1/2 in.		784767E
31	9 or 12	WASHER, flat, square, with tabs, and 9/16 in. hole		720658
32	9 or 12	THERMOPLASTIC CABLE SUPPORT, for 28 kV, 1/0, 2/C bare		011961
35	10 ft.	CONDUIT, PVC Schedule 40, 2 in.		734530
36	9 or 12	ADAPTER BRACKET, 4 in.		012465
37	9 or 12	WASHER, steel, round, zinc-plated, 3/8 in.		788044E
38	9 or 12	WASHER, steel, lock, split, zinc-plated, 3/8 in.		010468
Miscellaneous				
40	65 (estimate)	TIE STRAP, 7 in., plastic		735805E
	5 (estimate)	TIE STRAP, 14 in., plastic		735811E
46	9, 12, 15	TAG, cable identification		735800E
10	2	ROD, ground 5/8 in. x 8 ft., copper clad		564238E
11	2	CLAMP, ground rod, 5/8 in. to #2 copper		564012E

▲ 5-position J-box (686555) requires bushing insert (686449).

577 VAULT WITH THREE LOADBREAK JUNCTION BOXES INSTALLATION, GROUNDIING AND CONNECTIONS

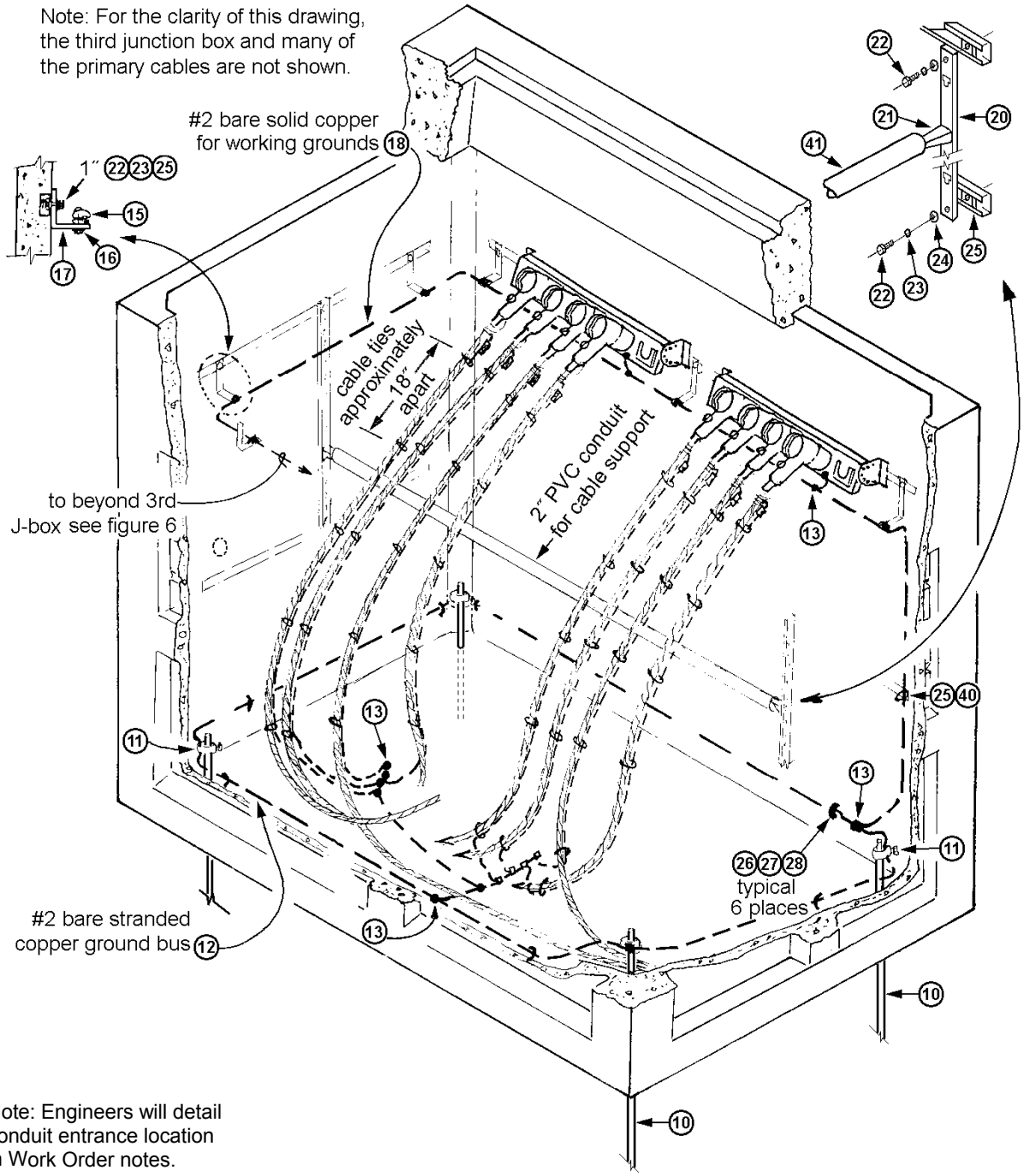

Note: Engineers will detail conduit entrance location in Work Order notes.

Figure 1. Junction Box Installation

standards coordinator	standards supervisor	unit director
Patti Berg	John Shipek	Pam S. Johnson

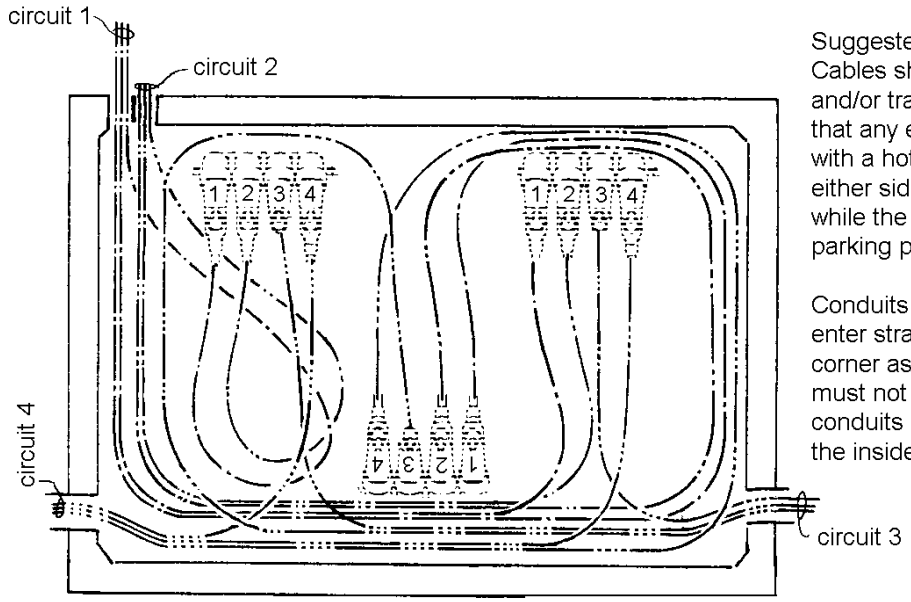

Suggested Cable Training: Cables shall be racked, routed and/or trained in such a manner that any elbow may be removed with a hot-stick and placed on either side with a feed-through while the feed-through is on the parking position of the J-box.

Conduits entering the vault should enter straight and as close to a corner as possible. The conduit must not interfer with any other conduits or any of the channels on the inside walls of the vault.

Figure 2. Cable Training and Conduit Entrance

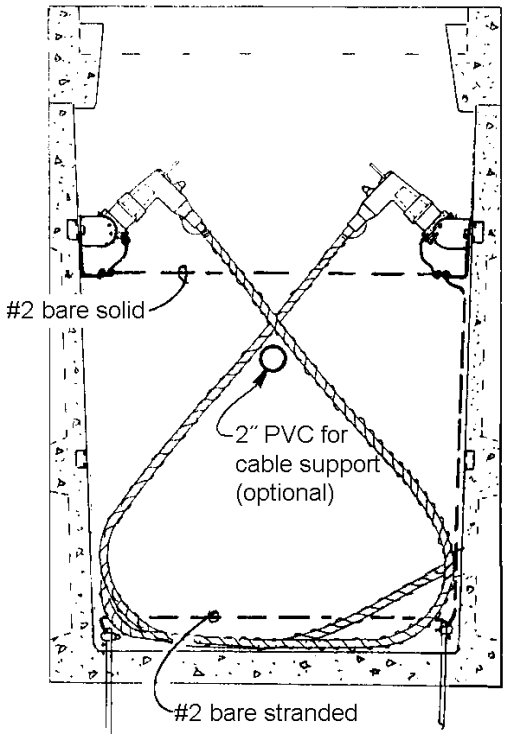

Figure 3. Cable Support

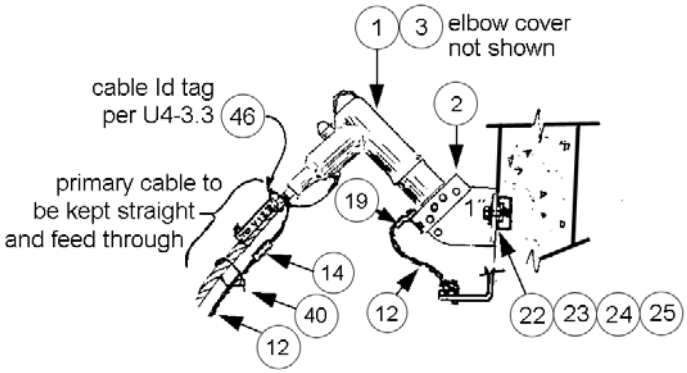

Figure 4. Elbow

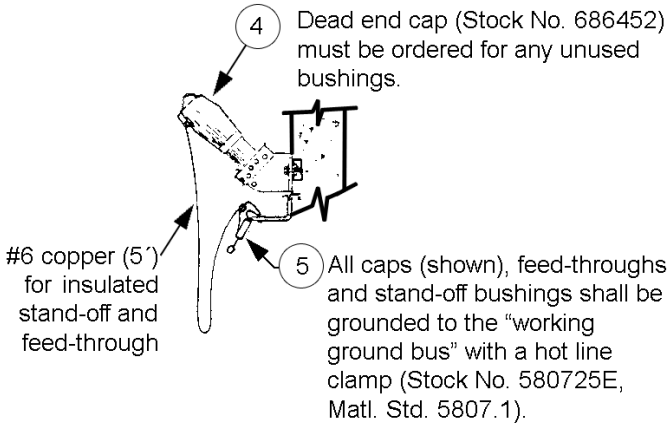

Figure 5. Dead End Cap

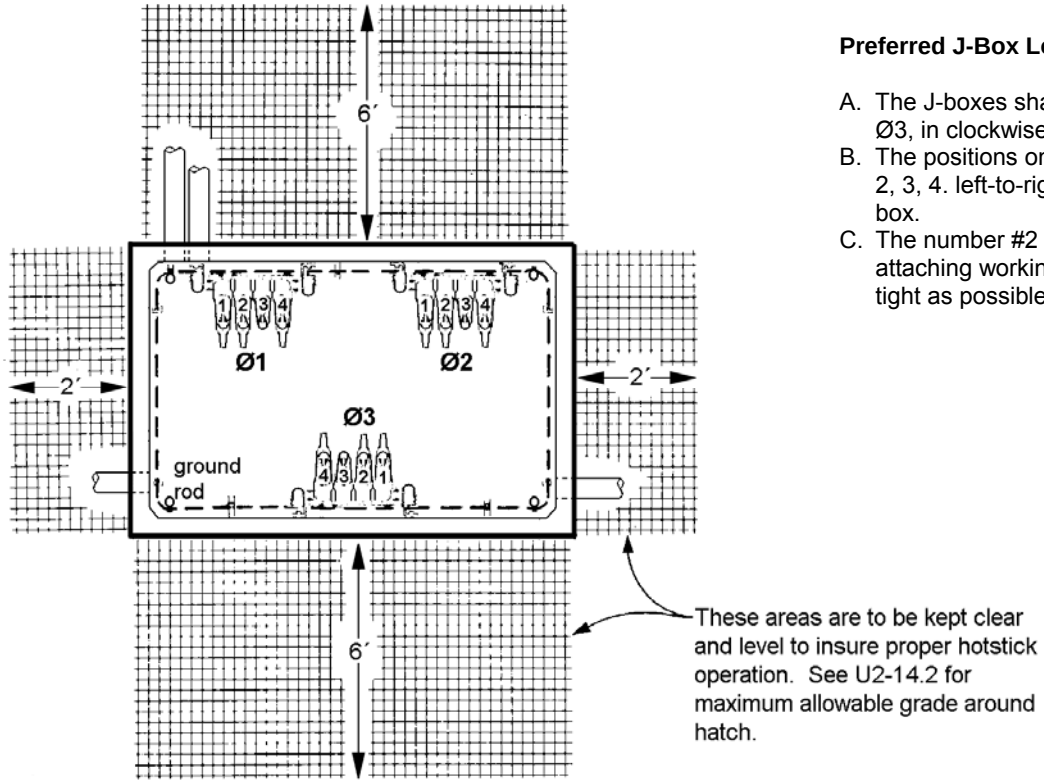

Preferred J-Box Locations

A. The J-boxes shall be located Ø1, Ø2, Ø3, in clockwise rotation.
B. The positions on the J-boxes shall be 1, 2, 3, 4. left-to-right when facing the J-box.
C. The number #2 bare solid wire for attaching working grounds shall be as tight as possible.

Figure 6. J-Box Locations and Operating Clearances

When using either of the J-box location alternatives below, particular attention must be given to where the cables (conduits) enter the vault and to proper cable training.

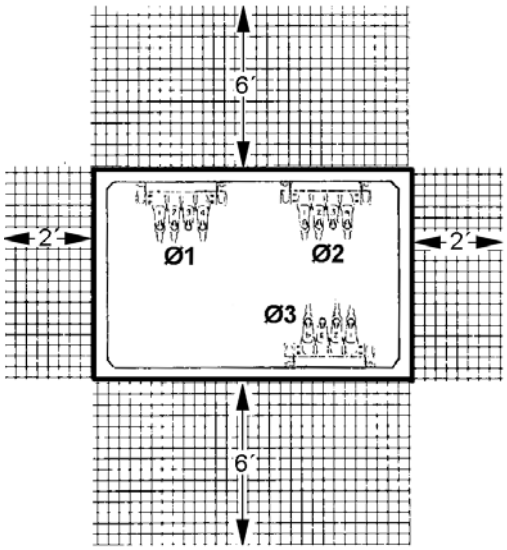

Figure 7. First Alternate J-Box Locations

Figure 8 alternative is to be used only when obstructions prevent the use of options. This option is never to be used for 5-way J-boxes.

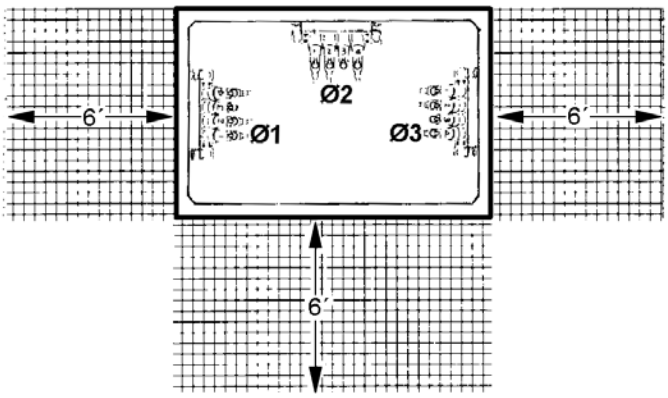

Figure 8. Second Alternate J-Box Locations

Material List

Item	Description		Quantity	Stock Number	Material Standard
Primary					
1	ELBOW, Load Break, 15.2/26.3 kV		9 or 12	686445	6864.05
2	JUNCTION BOX, Load Break	3 position	3	686454	6864.07
		4 position		686455	6864.07
		5 position* (see item 6)		686555	6864.07
3	COVER, Load Break Elbow, 1 per elbow		9 or 12	686467	none
4	CAP, Insulating Dead End		as required	686452	6864.07
5	CLAMP, Hot Line Tap		as required	580725E	5807.1
6	BUSHING INSERT, not included with 5-position J-box		as required*	686449	6864.07
Grounding					
10	GROUND ROD, Copper Clad, 5/8″ x 8′		4	564238E	5642.1
11	CLAMP, Ground Rod, medium duty, 5/8″ to #2		4	564012E	5640.3
12	WIRE, #2 Bare Stranded, copper, soft drawn		200′ (estimate)	610434	6103.9
13	CONNECTOR, Compression Tap, parallel #2 - #2 (crimpet)		18 (estimate)	677326E	6773.5
14	SPLICE, Straight, copper, #2 - #2, 1 per elbow		9 or 12	677357E	6773.8
15	CONNECTOR, Grounding, cable to flat, #4 - #2/0		9	676674	6766.1
16	WASHER, Cut, bronze, 3/8″		9	788024E	7880.2
17	BRACKET, Ground Support, Unistrut		9	686466	none
18	WIRE, #2 Bare Solid, copper, hard drawn		20′	610006	6100.1
19	TERMINAL LUG, Compression #2		3	677071E	6770.7
Racking and Mounting					
20	RACK, 18 Hole, galvanized, 30″		2 (estimate)	721666E	7216.7
21	HOOKS, Cable Rack, galvanized steel	4″	as required	720625E	7206.2
		7-1/2″	as required	720626E	7206.2
		14″	2 (estimate)	720631E	7206.2
22	BOLT, Machine, zinc plated	1/2″ x 1″	17 (estimate)	784825E	7847.1
		1/2″ x 1-1/2″	7 (estimate)	784827E	7847.1
23	WASHER, Lock, galvanized, 1/2″		19 (estimate)	584255E	5842.1
24	WASHER, Flat, galvanized, 1/2″		17 (estimate)	585025E	5847.1
25	NUT, Unistrut, 1/2″ P4010		20 (estimate)	723607E	none
26	CABLE TIE, plastic, 0.184″ x 7″		6 (estimate)	735805E	7358.1
27	MOUNTING BASE, for cable tie, 1/2″		6 (estimate)	735852	none
28	ANCHOR, Stud Bolt, 1/4″ x 1-3/4″		6 (estimate)	780091E	7800.9
Miscellaneous					
40	CABLE TIE, plastic	0.184″ x 7″	65 (estimate)	735805E	7358.1
		14″	5 (estimate)	735811E	7358.1
41	CONDUIT, PVC, Schedule, 40, 2″		7′ (estimate)	734530	7015.05
42	CONDUIT, PVC, Schedule, 40, 4″		as required	734523	7015.05
43	CABLE PROTECTOR, nylon		as required	731801E	7318.1
46	TAG, Cable Identification		9 or 12	735800E	7318.1

GROUNDING AND CONNECTION DIAGRAM, SINGLE PHASE 26 KV DISTRIBUTION TRANSFORMER

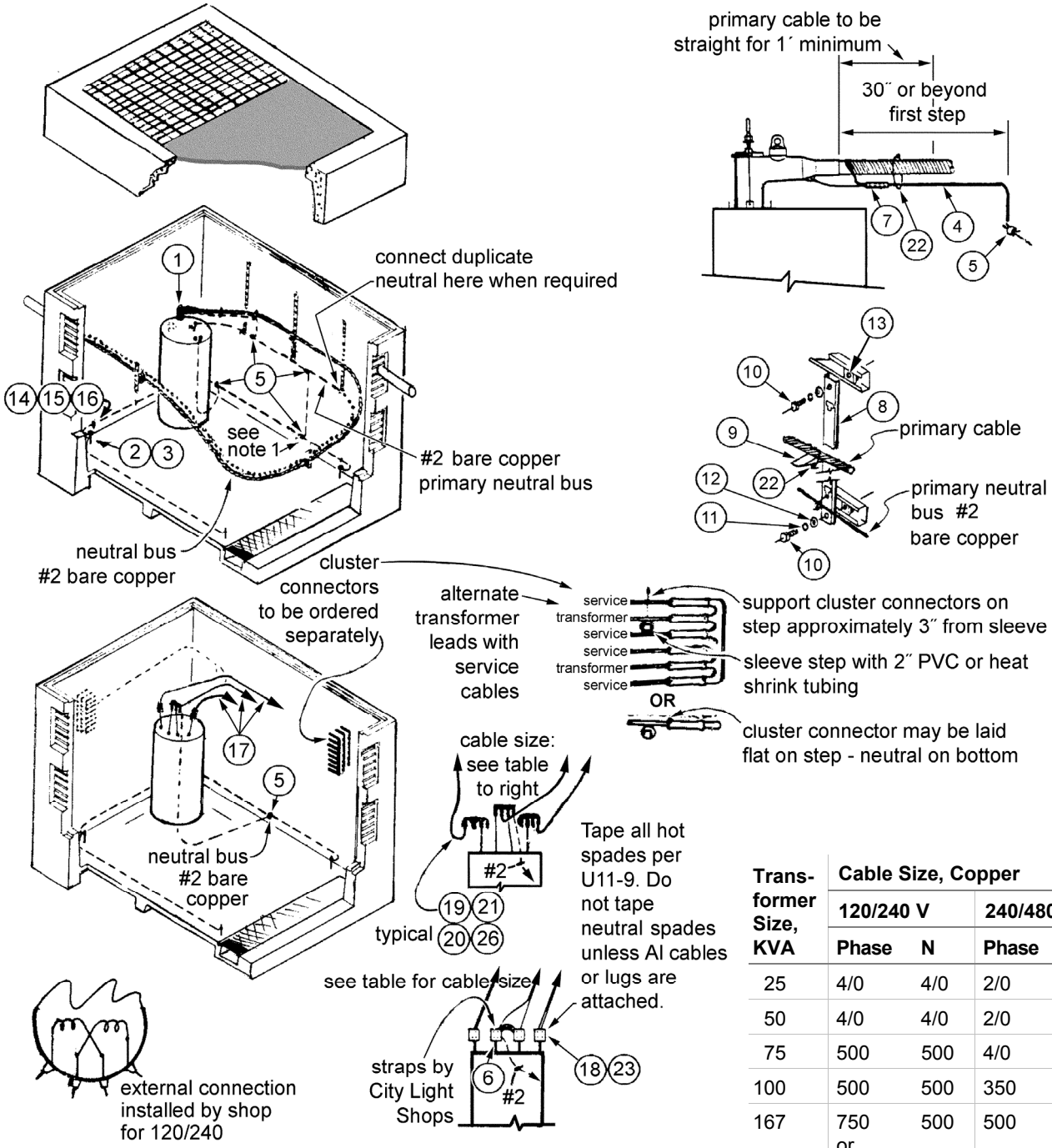

Trans-former Size, KVA	Cable Size, Copper			
	120/240 V		240/480 V	
	Phase	N	Phase	N
25	4/0	4/0	2/0	2/0
50	4/0	4/0	2/0	2/0
75	500	500	4/0	4/0
100	500	500	350	350
167	750 or 2-500s	500	500	500

STANDARDS COORDINATOR	STANDARDS SUPERVISOR	UNIT DIRECTOR
Rick Rice	John Barnett	Richard Kent

Material List

Item	Description		Quantity	Stock Number	Material Standard
1	ELBOW, Dead Break, 15.2 kV to ground		1	686416	6864.05
2	ROD, Ground, copper clad, 5/8″x8′		4	564238E	5642.1
3	CLAMP, Ground Rod, to #2 copper, 5/8″		4	564012E	5640.3
4	WIRE, #2 Bare Stranded, copper		100′	610434	6103.9
5	TAP, #2 to #2 Crimpet, copper		6	677326E	6773.5
6	LUG, #2 Compression, copper, 1/2″ stud		1	677071E	6770.7
7	SPLICE, Compression, straight, copper		1	677357E	6773.8
8	RACK, 18 Hole, galvanized, 30″		6 (estimate)	721666E	7216.7
9	HOOK, Cable Rack, galvanized steel	4″	6 (estimate)	720625E	7206.2
		14″	2 (estimate)	720631E	7206.2
10	BOLT, Zinc Plated	1/2″ x 1″	6 (estimate)	784825E	7847.1
		1/2″ x 1-1/2″	6 (estimate)	784827E	7847.1
11	LOCK WASHER, galvanized, 1/2″		12 (estimate)	584255E	5842.1
12	FLAT WASHER, galvanized, 1/2″		12 (estimate)	585025E	5847.1
13	NUT, Unistrut, P4010, 1/2″		12 (estimate)	723607E	–
14	CABLE TIE, plastic, 0.184″ x 7″		5 (estimate)	735805E	7358.1
15	MOUNTING BASE, for cable tie, 1/2″		5 (estimate)	735852	–
16	ANCHOR, Stud Bolt, 1/4″ x 1-3/4″		5 (estimate)	780091E	7800.9
17	CABLE, 600 Volt, XLP, copper	4/0	50′	613735	6010.0
		500	50′	613740	6010.0
		750	50′	613743	6010.0
18	COMPRESSION LUG, copper	4/0	3	677081E	6770.7
		500	3	677091E	6770.7
		750	3	677100	6770.7
19	CONNECTOR, 4 position, 1000 A		3	678707	6780.0
20	TERMINAL LUG, Cluster Connector, #2 copper, transformer ground		1	012729	6786.00
21	SLEEVE, Insulating		8	678620E	6786.2
22	TIE STRAP, plastic	7″	4 (estimate)	735805E	7358.1
		14″	16 (estimate)	735811E	7358.1
23	Nuts, Bolts, Washers, Tape (refer to Construction Guideline U11-9)			–	–
26	Terminal Lug, Al-Cu	2/0	3	678687E	6786.00
		4/0	3	678689E	6786.00
		350	3	678699E	6786.00
		500	3	678700E	6786.00

Notes:

1. Attach copper ground bus to vault wall 6″ above floor using cable ties, cable tie mounting base and anchor bolts, Material List Item No. 14, 15 and 16.

2. If J-Boxes, switches or other primary (equipment is installed in the same vault, connect primary neutrals to the primary neutral bus. Equipment grounds may be attached to the ground bus.)

3. Primary cable is to route so that it is racked on at least two walls.

4. Generally, secondary is racked above the primary.

5. Install HIGH VOLTAGE sign (Stock No. 765181) on all above grade installations.

6. When specified, install sump pump and/or vault lights per Guideline U10-6.

7. All secondary leads to be laid straight on steps (hooks) with no intertwining of the leads.

8. Cable tagging per U4-3.3.

9. To avoid induced currents and heating of the steps and racks, **DO NOT** lay separate phase conductors on separate steps.

10. Connect only the neutrals on all idle services.

11. Generally, up to 4 sets of service cables may be connected directly on the transformer spades or cluster connectors if:
    - 11.1 Service cables to be connected on cluster connectors are no larger than 500 kcmil.
    - 11.2 Service cables to be connected on the transformer spades are no larger than 750 kcmil.

12. Cluster connectors shown on the vault wall **are to be ordered separately** with the following considerations:
    - 12.1 Residential, light industrial or light commercial type;
      - Available in 3, 4, 6 or 8 position with streetlight tap (Stock No. 678800, 678707, 678713 and 678715).
      - Maximum cable size is 500 kcmil per position since the cluster connector requires 7/8″ bolt spacing, hook type lugs (Stock No. 678687E through 678700E).
      - Each cluster connector weighs approximately 4-1/2 pounds.
    - 12.2 Heavy Duty Type;
      - Available in 4, 6 and 8 position (Stock No. 678760 through 678763).
      - Maximum cable size is 1000 kcmil per position. These connectors require 1-3/4″ bolt spacing lugs (Stock No. 651255 through 651272 for Aluminum and 677065E through 677100 for copper).
      - **Each** heavy duty cluster connector weighs approximately 16 pounds.

13. In lieu of ground rods, 50 feet of No. 2 bare stranded copper wire, per rod, may be laid in the bottom of the trench in opposite directions. The wire shall be a minimum of 6″ away from other cables, conduits or concrete encasements.

TRANSFORMER INSTALLATION, GROUNDING AND CONNECTIONS 120/240V AND 240/480V, 3∅-4W

Figure 1

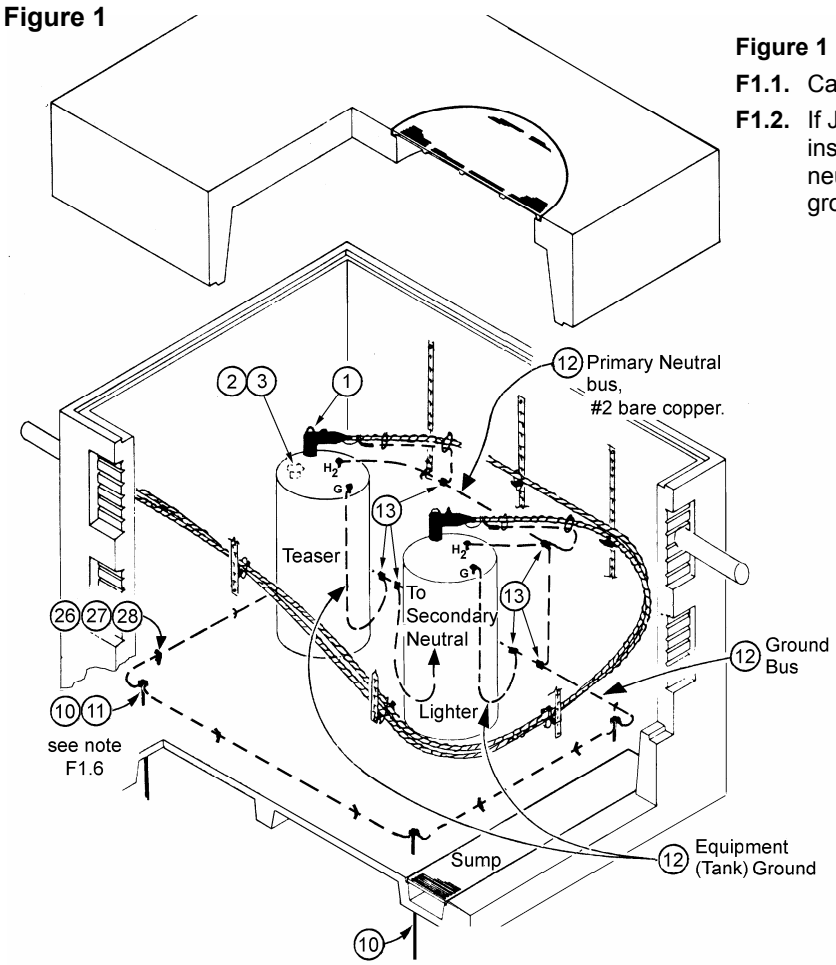

Figure 1 Notes:

F1.1. Cable tagging per U4-3.3

F1.2. If J-Boxes, switches or other primary equipment is installed in the same vault, connect the primary neutrals to the primary neutral bus. (Equipment grounds may be attached to the ground bus.)

F1.3. Primary cable to route so that it is racked on **at least** 2 walls.

F1.4. Generally, secondary is racked above primary.

F1.5. Install **high voltage** sign (765181) and lock (URD-SNM-1) on all above grade installations.

F1.6. In lieu of ground rods, 50 feet of #2 bare stranded copper wire, per rod, may be laid in the bottom of the trench in opposite directions. The wire shall be a minimum of 6 inches away from other cables, conduits or concrete encasements.

CAUTION: HIGH VOLTAGE MAY EXIST ON SECONDARY BUSHINGS. CONNECT CENTER-POINT GROUND ON LIGHTER AND CONNECT TEASER TO LIGHTER BEFORE ENERGIZING PRIMARIES.

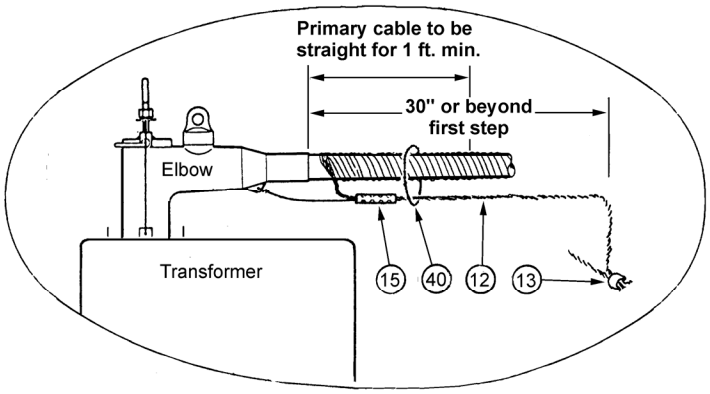

Elbow Detail

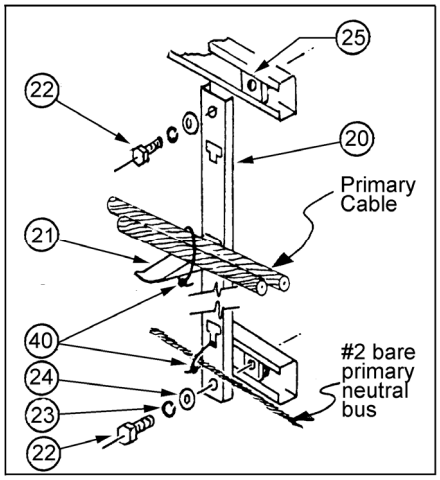

Racking Detail

STANDARDS COORDINATOR	STANDARDS SUPERVISOR	UNIT DIRECTOR
Rick Rice	John Barnett	Richard Kent

Figure 2

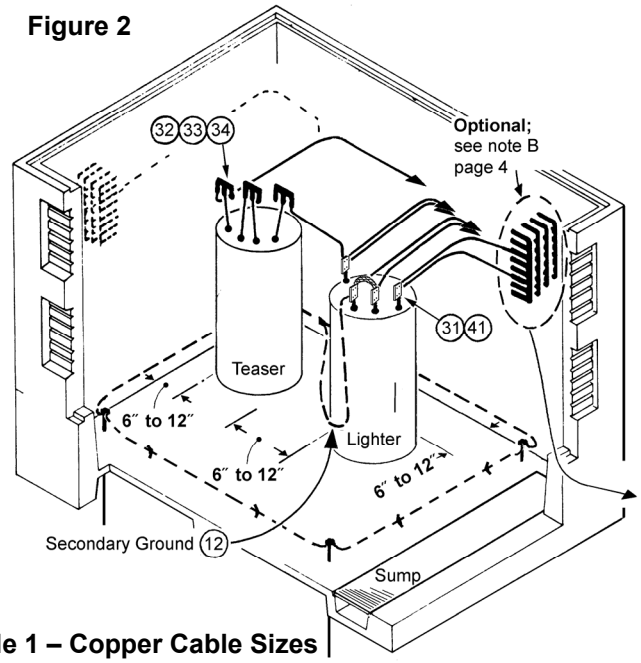

Figure 2 Notes

F2.1. Cable tagging per U4-3.3.

F2.2. When specified, install cable limiters per DU11-4.

F2.3. When specified, install sump pump and/or vault light per U10-6.

F2.4. All secondary leads to be laid straight on steps (hooks) with no intertwining of the leads.

F2.5. To avoid induced currents and heating of the steps and racks, **do not** lay separate phase conductors on separate steps.

F2.6. Connect only the neutrals on all idle services.

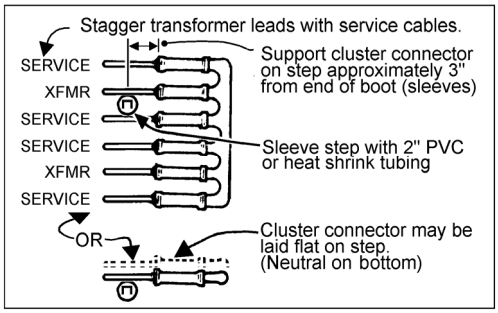

Table 1 – Copper Cable Sizes

KVA	ØA	ØB	ØC	N
	120/240V 3Ø			
25-25	4/0	4/0	4/0	4/0
50-25	4/0	4/0	4/0	4/0
50-50	4/0	4/0	4/0	4/0
75-25	500	500	4/0	500
75-50	500	500	4/0	500
75-75	500	500	500	500
100-25	500	500	4/0	500
100-50	500	500	4/0	500
100-75	500	500	500	500
100-100	500	500	500	500
167-25	750	750	4/0	500
167-50	750	750	4/0	500
167-75	750	750	500	500
167-100	750	750	500	500
167-167	750	750	750	500
	240/480V 3Ø			
25-25	2/0	2/0	2/0	2/0
50-25	2/0	2/0	2/0	2/0
50-50	2/0	2/0	2/0	2/0
75-25	4/0	4/0	2/0	4/0
75-50	4/0	4/0	2/0	4/0
75-75	4/0	4/0	4/0	4/0
100-25	350	350	2/0	350
100-50	350	350	2/0	350
100-75	350	350	4/0	350
100-100	350	350	350	350
167-25	500	500	2/0	500
167-50	500	500	2/0	500
167-75	500	500	4/0	500
167-100	500	500	350	500
167-167	500	500	500	500

Note: 2-500 may be substituted for 750.

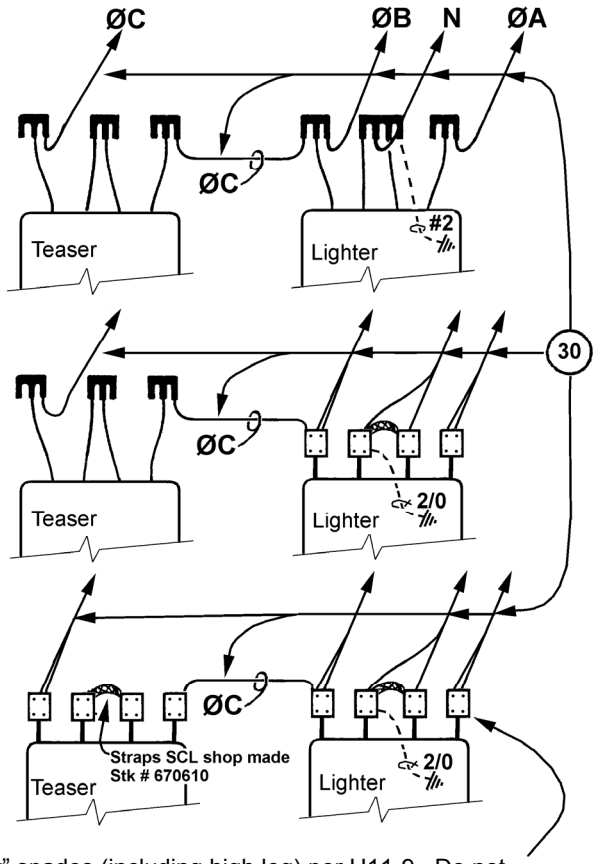

Tape all "hot" spades (including high leg) per U11-9. Do not tape neutral spades unless aluminum cables or lugs are attached.

Figure 3

Table 2 – Material List

Item	Quantity	Description			Stock No.	Matl. Std.
Primary						
1	2	ELBOW, deadbreak, 15.2 kV to ground			686416	6864.15
2	0, 1 or 2	CAP, insulating, deadend (for 2 bushing transformers)			686411	none
3	0, 1 or 2	BAIL, hold down, 1 for each elbow and each dead end cap			686563	none
Grounding						
10	4	GROUND ROD, copper clad, 5/8″ x 8'			564238E	5642.1
11	4	GROUND ROD CLAMP, 5/8″ to #2			564012E	5640.3
12	100 ft.	WIRE, bare, stranded, copper #2			610434	6103.9
13	2	CONNECTOR, parallel, crimpet, #2 to #2			677326E	6773.5
14	see Table 3	TERMINAL, compression, copper lug, #2			677071E	6770.7
15	2	SPLICE, copper, straight, #2 to #2			677357E	6773.8
Racking and Mounting						
20	6 estimated	RACK, 18 hole, galvanized, 30″			721666E	7216.7
21	6 estimated	HOOK, cable rack, galvanized steel		4″	720625E	7206.2
	8 estimated			7-1/2″	720626E	7206.2
	2 estimated			14″	720631E	7206.2
22	6 estimated	MACHINE BOLT, zinc plated1/2″ x 1″		1/2″ x 1″	784825E	7847.1
				1/2″ x 1-1/2″	784827E	7847.1
23	12 estimated	LOCK WASHER, galvanized, 1/2″			584255E	5842.1
24	12 estimated	FLAT WASHER, galvanized, 1/2″			585025E	5847.1
25	12 estimated	UNISTRUT NUT, P 4010, 1/2″			723607E	none
26	10 estimated	PIPE STRAP, 1 hole, galvanized, 1/4″			713440E	7134.5
27*	10 estimated	ANCHOR, light duty, 1/4″ - 20			780074E	7800.7
28**	10 estimated	SCREW, slotted, round-head, brass		1/4″-20 x 3/4″	785827E	none
Secondary						
30	see Table 3	CABLE, 600 V, XLP, copper		2/0	613733	6010.0
				4/0	613735	6010.0
				350	613738	6010.0
				500	613740	6010.0
				750	613743	6010.0
31	see Table 3	TERMINAL, compression, copper lug	2/0 transformer ground		012729	6786.00
			4/0		677081E	6770.7
			350		677087E	6770.7
			500		677091E	6770.7
			750		677100	6770.7
32	see Table 3	CONNECTOR, multiple cluster		3 position	678800	6780.0
				4 position	678707	6780.0
33	see Table 3	TERMINAL, lug for multiple connectors	#2 Cu		678692E	6786.00
			2/0 Cu		678687E	6786.00
			4/0 Cu		678689E	6786.00
			300 to 350 Cu stranded compact		678699E	6786.00
			400 to 500 Cu stranded compact		678700E	6786.00
34	see Table 3	INSULATING SLEEVE			678620E	6786.2
Miscellaneous						
40	4 estimated	TIE STRAP, plastic		7″	735805E	7358.1
	16 estimated			14″	735811E	7358.1
41		Nuts, bolts, washers and tape per Guideline U11-9			–	–

* Item 27: Not needed for vaults furnished with inserts cast in the walls or for 814 and larger vaults.
** Item 28: Use 1/2″ if 814 or 818 precast vault.

General Notes

A. Generally, up to 4 sets of service cables may be connected directly on the transformer spades or cluster connectors if:
- A1. Service cables to be connected on cluster connectors are no larger than 500 kcmil.
- A2. Service cables to be connected on the transformer spades are no larger than 750 kcmil.

B. Cluster connectors shown on the vault walls are to be ordered separately with the following considerations:
- B1. Residential, light industrial or light commercial type.
  - B1.1. Available in 3, 4, 6 and 8 position with streetlight tap (Stock Nos. 678800, 678707, 678713, and 678715).
  - B1.2. Maximum cable size is 500 kcmil per position since the cluster connector requires 7/8 inch bolt spacing, hook type lugs (Stock Nos. 678687E thru 678700E).
  - B1.3. Each cluster connector weighs approximately 4-1/2 pounds.
- B2. Heavy duty type
  - B2.1. Available in 4, 6 & 8 position (Stock Nos. 678760 thru 678763).
  - B2.2. Maximum cable size is 1000 kcmil per position. These connectors require 1-3/4 inch bolt spacing lugs (Stock Nos. 651255 thru 651272 for aluminum and 677065E thru 677100 for copper).
  - B2.3. Each heavy duty cluster connector weighs approximately 16 pounds.

C. The decision on whether to use 500 or 750 kcmil cable will depend upon:
- C1. Number and **size** of service cables.
- C2. Heavy duty vs. "lighter" duty cluster connectors.
- C3. Number of positions available on transformer spades with or without stacking type lugs.
- C4. Hand vs. motor driven compression tools (motor driven press is required for lugs above 500 kcmil.)

D. In lieu of ground rods, 50 feet of #2 bare stranded copper wire, per rod, may be laid in the bottom of the trench in opposite directions. The wire shall be a minimum of 6 inches away from other cables, conduits or concrete encasements.

Table 3 – Estimated Material Quantities

Estimated quantities are given as the minimum number required. The numbers following in parentheses indicate estimated additional quantities required to run to cluster connectors on vault walls, as 5(40). Assumes transformer with cable leads come with terminal lugs for cluster connectors.

Transformer Bank Size	Item 30 Cable, 1/C, 600V, XLP, Cu					Items 14 & 31 Terminal Lug, Cu, Compression						Item 32 Connector, Multiple Cluster		Item 33 Terminal Lug, Al/Cu for Cluster Connector					Item 34 Sleeves Insulating for Cluster Connector					
120/240	**2/0**	**4/0**	**350**	**500**	**750**	**#2**	**2/0**	**4/0**	**350**	**500**	**750**	**3PSN**	**4PSN**	**#2***	**2/0**	**4/0**	**350**	**500**	**CAP**	**#2**	**2/0**	**4/0**	**350**	**500**
25&25	–	5(40)	–	–	–	–	–	–	–	–	–	5	1	1	–	6	–	–	4	1	–	6	–	–
50&25	–	5(40)	–	–	–	–	–	–	–	–	–	5	1	1	–	6	–	–	4	1	–	6	–	–
50&50	–	5(40)	–	–	–	–	–	–	–	–	–	5	1	1	–	6	–	–	4	1	–	6	–	–
75&25	–	5(10)	–	0(30)	–	–	–	–	–	–	–	5	1	1	–	3	–	3	4	1	–	3	–	3
75&50	–	5(10)	–	0(30)	–	–	–	–	–	–	–	5	1	1	–	3	–	3	4	1	–	3	–	3
75&75	–	–	–	5(40)	–	–	–	–	–	–	–	5	1	1	–	–	–	6	4	1	–	–	–	6
100&25	–	5(10)	–	0(30)	–	–	1	1(0)	–	3	–	3	–	–	–	2	–	–	3	–	–	2	–	–
100&50	–	5(10)	–	0(30)	–	–	1	1(0)	–	3	–	3	–	–	–	2	–	–	3	–	–	2	–	–
100&75	–	–	–	5(40)	–	–	1	0	–	1(3)	–	3	–	–	–	–	–	2	3	–	–	–	–	2
100&100	–	–	–	5(40)	–	–	1	–	–	2(4)	0	–	–	–	–	–	–	–	–	–	–	–	–	–
167&25	–	5(10)	–	0(10)	0(20)	–	1	1(0)	0	0(1)	0(2)	3	–	–	–	2	–	–	–	–	–	2	–	–
167&50	–	5(10)	–	0(10)	0(20)	–	1	1(0)	0	0(1)	0(2)	3	–	–	–	2	–	–	–	–	–	5	–	–
167&75	–	–	–	5(20)	0(20)	–	1	–	–	2(1)	0(2)	3	–	–	–	–	–	–	–	–	–	–	–	5
167&100	–	–	–	5(20)	0(20)	–	1	–	–	2(1)	0(2)	–	–	–	–	–	–	–	–	–	–	–	–	–
167&167	–	–	–	0(10)	0(40)	–	1	–	–	0(1)	2(5)	–	–	–	–	–	–	–	–	–	–	–	–	–
240/480	**2/0**	**4/0**	**350**	**500**	**750**	**#2**	**2/0**	**4/0**	**350**	**500**	**750**	**3PSN**	**4PSN**	**#2***	**2/0**	**4/0**	**350**	**500**	**CAP**	**#2**	**2/0**	**4/0**	**350**	**500**
25&25	5(40)	–	–	–	–	–	–	–	–	–	–	5	1	1	6	–	–	–	4	1	6	–	–	–
50&25	5(40)	–	–	–	–	–	–	–	–	–	–	5	1	1	6	–	–	–	4	1	6	–	–	–
50&50	5(40)	–	–	–	–	–	–	–	–	–	–	5	1	1	6	–	–	–	4	1	6	–	–	–
75&25	5(10)	5(30)	–	–	–	–	–	–	–	–	–	5	1	1	3	3	–	–	4	1	3	3	–	–
75&50	5(10)	5(30)	–	–	–	–	–	–	–	–	–	5	1	1	3	3	–	–	4	1	3	3	–	–
75&75	–	5(40)	–	–	–	–	–	–	–	–	–	5	1	1	–	6	–	–	4	1	–	6	–	–
100&25	5(10)	–	0(30)	–	–	–	2	–	0(3)	–	–	3	–	–	2	–	–	–	3	–	2	–	–	–
100&50	5(10)	–	0(30)	–	–	–	2	–	0(3)	–	–	3	–	–	2	–	–	–	3	–	2	–	–	–
100&75	–	5(10)	0(30)	–	–	–	1	1	0(3)	–	–	3	–	–	–	2	–	–	3	–	–	2	–	–
100&100	–	–	5(40)	–	–	–	1	–	2(4)	–	–	–	–	–	–	–	–	–	–	–	–	–	–	–
167&25	5(10)	–	–	0(30)	–	–	2	–	–	(3)	–	3	–	–	2	–	–	–	3	–	2	–	–	–
167&50	5(10)	–	–	0(30)	–	–	2	–	–	(3)	–	3	–	–	2	–	–	–	3	–	2	–	–	–
167&75	–	5(10)	–	0(30)	–	–	1	1	–	(3)	–	3	–	–	–	2	–	–	3	–	–	2	–	–
167&100	–	–	5(10)	0(30)	–	–	1	–	2(1)	(3)	–	–	–	–	–	–	–	–	–	–	–	–	–	–
167&167	–	–	–	5(40)	–	–	1	–	–	2(4)	–	–	–	–	–	–	–	–	–	–	–	–	–	–

*Long barrel for transformer ground

TRANSFORMER INSTALLATION, GROUNDING AND CONNECTIONS 208Y/120, 240Y/138, 480Y/277 VOLTS, 3∅-4W SUBTRACTIVE POLARITY

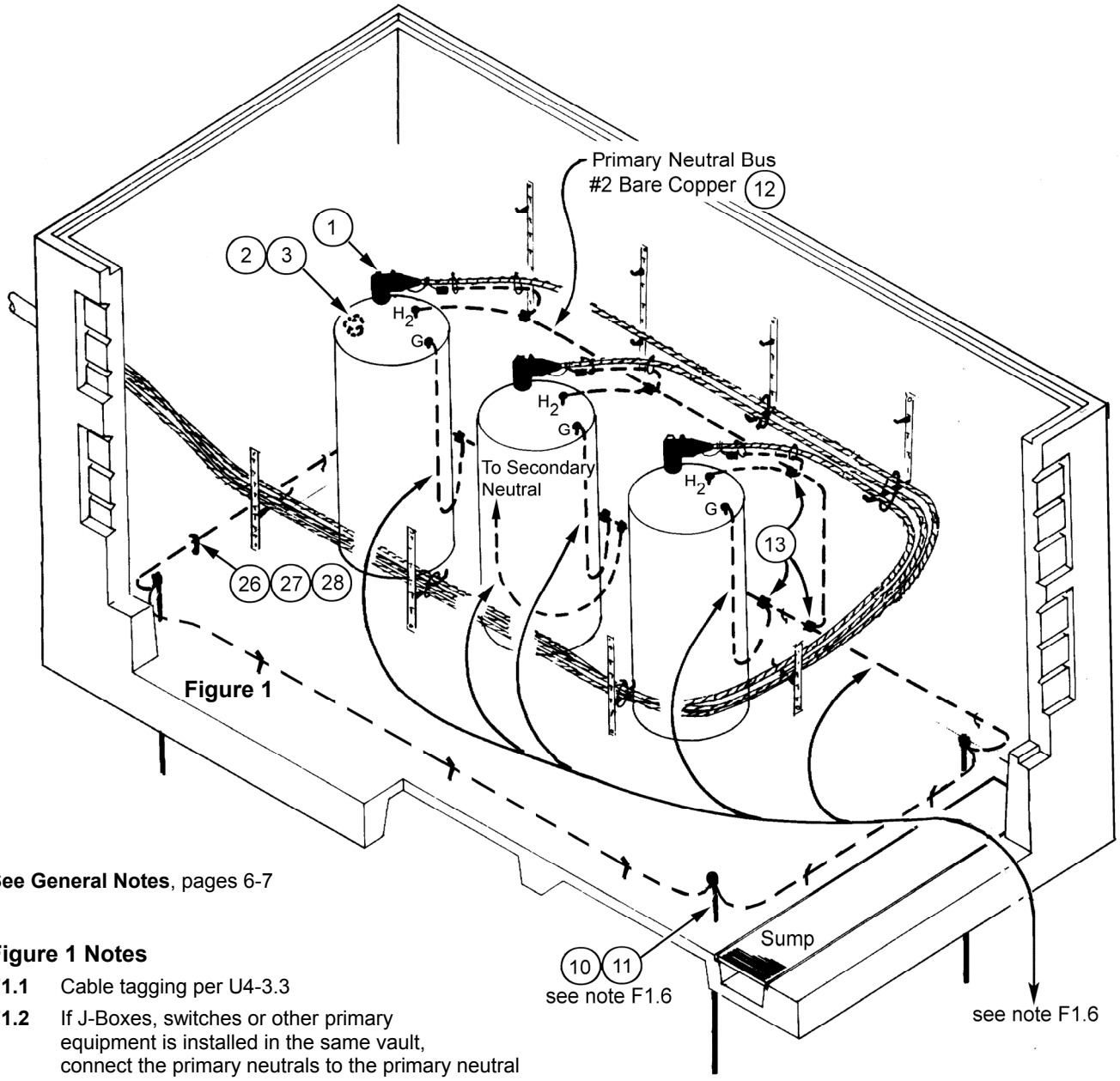

Figure 1

See General Notes, pages 6-7

Figure 1 Notes

F1.1 Cable tagging per U4-3.3

F1.2 If J-Boxes, switches or other primary equipment is installed in the same vault, connect the primary neutrals to the primary neutral bus. (Equipment grounds may be attached to the ground bus.)

F1.3 Primary cable to route so that it is racked on at least 2 walls.

F1.4 Generally, secondary is racked above primary.

F1.5 Install high voltage sign (Stock No. 765181) and lock (URD-SNM-1) on all above grade installations.

F1.6 Ground bus, equipment ground, and secondary neutral ground are #2 bare, 7 strand, soft drawn copper; all transformer sizes, item 12 on Table 2, Material List.

STANDARDS COORDINATOR	STANDARDS SUPERVISOR	UNIT DIRECTOR
Jon Hickman	John Barnett	John Neirenberg

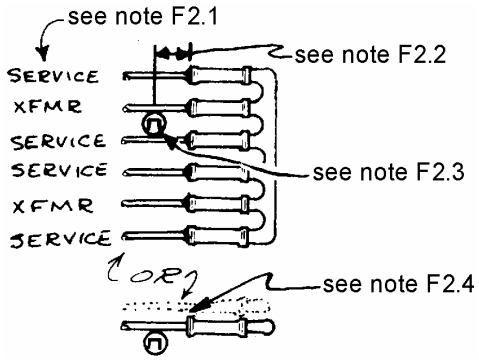

Figure 2

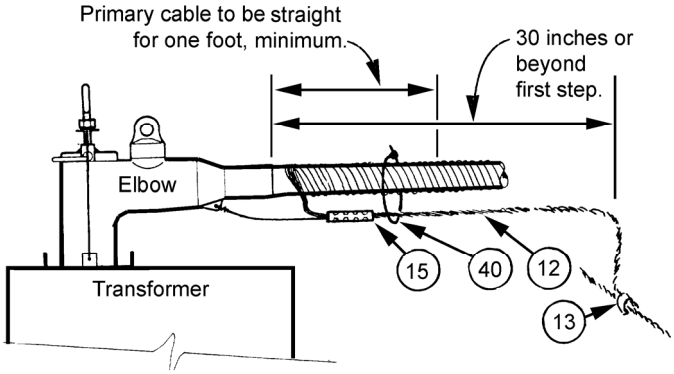

Figure 3

Figure 2 Notes

F2.1 Stagger transformer leads with service cables.

F2.2 Support cluster connector on step approximately 3″ from end of boot (sleeve).

F2.3 Sleeve step with 2″ PVC or heat shrink tubing.

F2.4 Cluster connector may be laid flat on step (neutral on bottom).

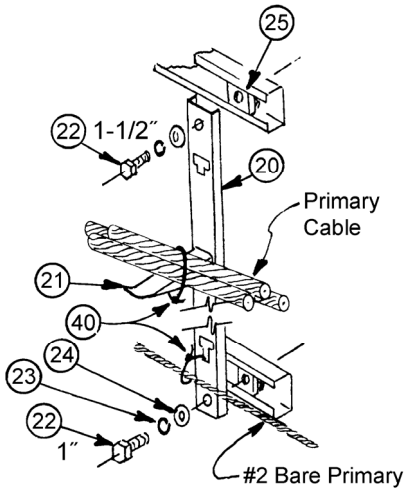

Figure 4

Figure 5 Notes – Transformers with Cable Leads

F5.1 Cable tagging per U4-3.3.

F5.2 When specified, install cable limiters per DU11-4.

F5.3 When specified, install sump pump and/or vault light per U10-6.

F5.4 All secondary leads to be laid straight on steps (hooks) with no intertwining of the leads.

F5.5 To avoid induced currents and heating of the steps and racks, **do not** lay separate phase conductors on separate steps.

F5.6 Connect only the neutrals on all idle services.

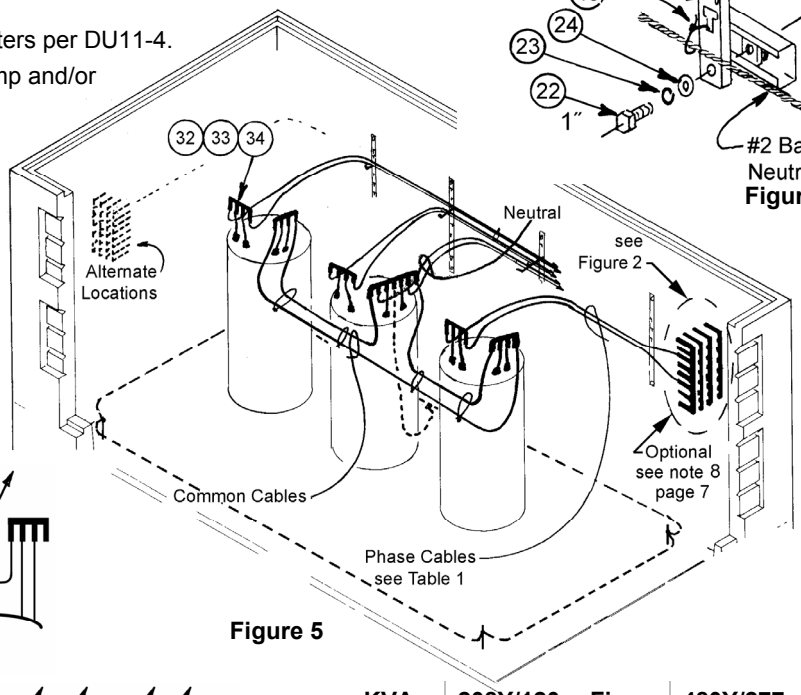

Figure 5

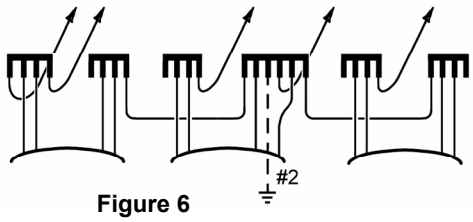

Figure 6

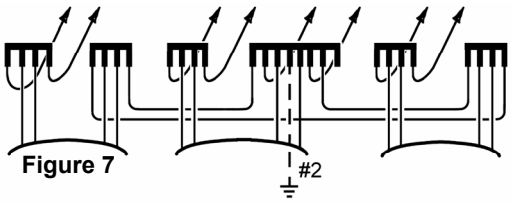

Figure 7

KVA	208Y/120	Figure	480Y/277	Figure
3-25	1-4/0	6	1-2/0	6
3-50	1-500	6	1-4/0	6
3-75	2-350	7	1-4/0	6

Table 1 – Copper Cable Sizes – Transformers with Spades

KVA	Phase and Common	Neutral	Figure
208Y/120 & 240Y/138			
3-100	2-500	1-500	9
3-167*	2-750	2-500	9
3-167*	3-500		10
480Y/277			
3-100	1-500	1-500	8
3-167*	2-350	2-350	9

* See note 8, page 6

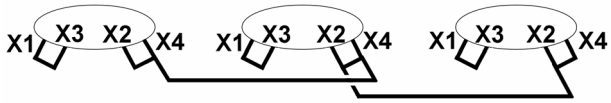

Figure 8

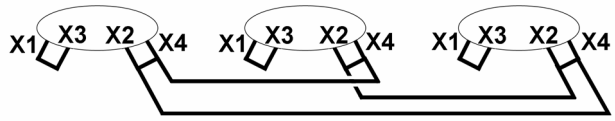

Figure 9

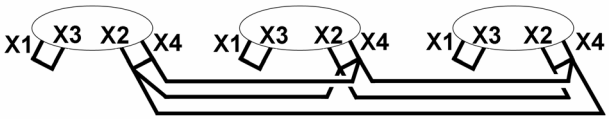

Figure 10

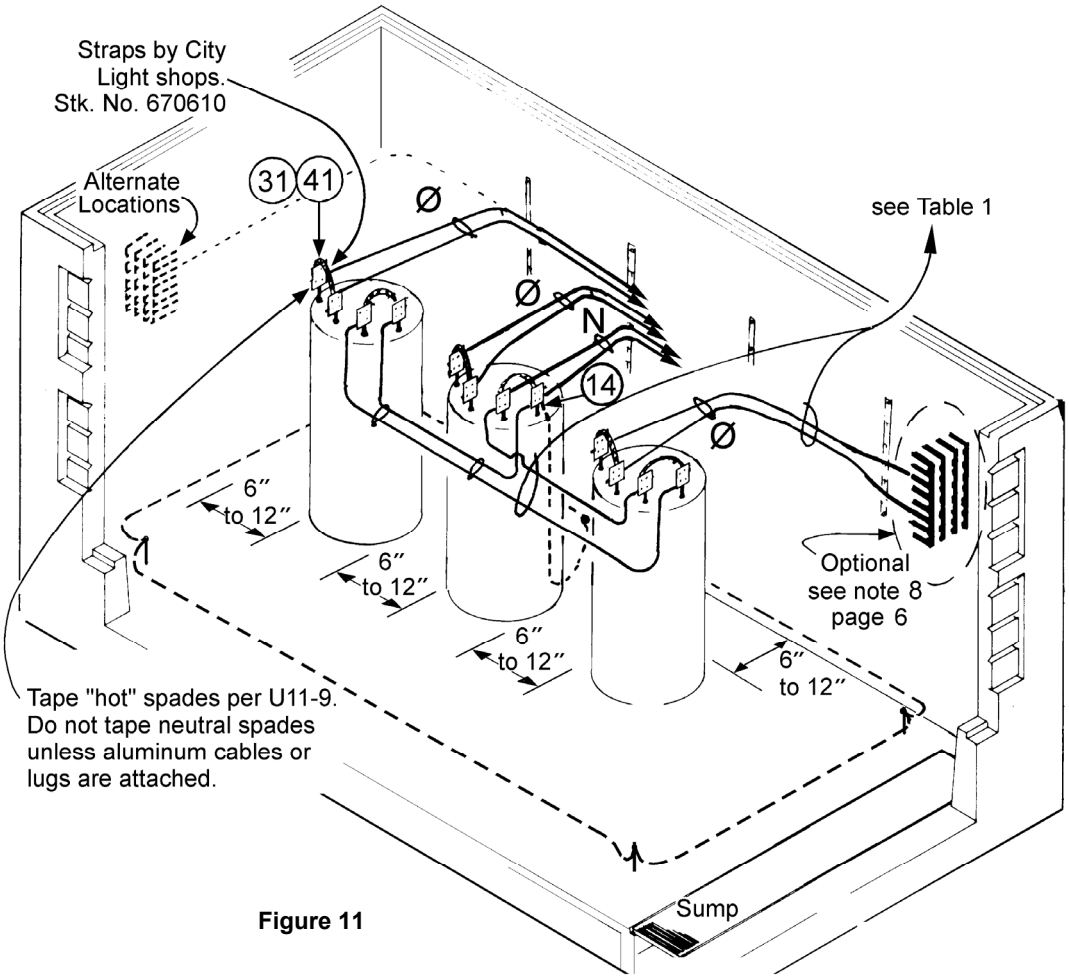

Figure 11

Table 2 – Material List (notes next page)

Item	Quantity	Description		Stock No.	Matl. Std.
1	3	ELBOW, Deadbreak, 15.2 kV to ground		686416	6864.0
2	0, 1, 2 or 3	CAP, Insulating, Deadend (for 2 bushing transformers)		686411	–
3	as required	BAIL, Hold Down, 1 for each elbow & each dead end cap		012587	–
10	2	GROUND ROD, copper clad, 5/8″ x 8′		564238E	5642.1
11	2	GROUND ROD CLAMP, 5/8″ to #2		564012E	5640.3
12	90 ft.	WIRE, Bare, stranded, copper #2		610434	6103.9
13	8	CONNECTOR, Parallel, crimpet, #2 to #2		677326E	6773.5
14	see page 5	TERMINAL, Compression, copper lug	#2	677071E	6770.7
			2/0	677077E	6770.7
15	3	SPLICE, straight, copper, #2 to #2		677357E	6773.8
20	8 estimated	RACK, 18 hole, galvanized, 30″		721666E	7216.7
21	8 estimated	HOOK, Cable Rack, galvanized steel	4″	720625E	7206.2
			7-1/2″	720626E	7206.2
			14″	720631E	7206.2
22	8 estimated	MACHINE BOLT, zinc plated, 1/2″ x 1″	1/2″ x 1″	784825E	7847.1
	8 estimated		1/2″ x 1-1/2″	784827E	7847.1
23	16 estimated	LOCK WASHER, galvanized, 1/2″		584255E	5842.1
24	16 estimated	FLAT WASHER, galvanized, 1/2″		585025E	5847.1
25	16 estimated	UNISTRUT NUT, P 4010, 1/2″		723607E	–
26	6 estimated	PIPE STRAP, 1 Hole, galvanized, 1/4″		713440E	7134.5
27	6 estimated	ANCHOR, light duty, 1/4″ - 20 (see note T2.1, page 5)		780074E	7800.7
28	6 estimated	SCREW, Slotted, round-head, brass (see note T2.2, p5)	1/4″-20 x 3/4″	785827E	–
		SCREW, Cap, silicon bronze, hex head (see note T2.2, p5)	1/2″-13 x 1″	784585E	7845.1
30	see page 5	CABLE, 600 V, XLP, copper	2/0	613733	6010.0
			4/0	613735	6010.0
			350	613738	6010.0
			500	613740	6010.0
			750	613743	6010.0
31	see page 5	TERMINAL, Compression, copper lug	350	677087E	6770.7
			500	677091E	6770.7
			750	677100	6770.7
32	see page 5	CONNECTOR, Multiple Cluster	3 position	678800	6780.0
			4 position	678707	6780.0
			6 position	678713	6780.0
			8 position	678715	6780.0
33	see page 5	TERMINAL, Lug, extra long barrel	#2 Cu, for grounding only	012729	6786.0
		TERMINAL, Lug for multiple connectors	#2 Cu	678687E	6786.0
			2/0 Cu	678687E	6786.0
			4/0 Cu	678689E	6786.0
			300 to 350 Cu stranded compact	678699E	6786.0
			400 to 500 Cu stranded compact	678700E	6786.0
34	see page 5	INSULATING SLEEVE		678620E	6786.2
		SLEEVE PLUG		678618E	6786.2
35	1	SPLICE, Compression, (see note T2.3, page 5), #2 to #2		677357E	6773.8
36	1 roll	SEALANT, Electrical, 3-3/4″, (see note T2.3, page 5)		736470E	7364.7
37	1 roll	TAPE, Electrical, plastic, 3/4″,(see note T2.3, page 5)		736655E	7366.5
40	6 estimated	TIE STRAP, plastic	7″	735805E	7358.1

	20 estimated	14″	735811E	7358.1
41	Nuts, bolts, washers and tape per Guideline U11-9		–	–

Table 2 Notes

T2.1 Item 27: Not needed for vaults furnished with inserts cast in the walls or for 814 and 818 precast vaults.
T2.2 Item 28: Use 1/2″ if 814 or 818 precast vault.
T2.3 Items 32, 33 and 34: Use only with transformers with cable leads (25 to 75 kVA).

Table 3 – Material Quantity Estimates – Transformers with Cable Leads and Spade Lugs

KVA	Voltage	Wire, ft. §					Cluster				Terminals ▲					Sleeves	Plugs	Copper Comp Lugs				
		2/0	4/0	350	500	750	3P	4P	6P	8P	#2*	2/0	4/0	350	500			#2	2/0	350	500	750
Cable Leads																						
3-25	**208Y/120**	–	10	–	–	–	–	5	1	–	1	–	4	–	–	26	5	–	–	–	–	–
	408Y/277	10	–	–	–	–		5	1	–	1	4		–	–	26	5	–	–	–	–	–
	240Y/138	–	10	–	–	–	–	5	1	–	1	–	4	–	–	30	6	–	–	–	–	–
3-50	**208Y/120**	–	–	–	10	–	–	5	1	–	1	–	–	–	4	26	5	–	–	–	–	–
	408Y/277	–	10	–	–	–	–	5	1	–	1	–	4	–	–	26	5	–	–	–	–	–
	240Y/138	–	–	–	10	–	–	5	1	–	1	–	–	–	4	30	6	–	–	–	–	–
3-75	**208Y/120**	–	–	20	–	–	–	5	–	1	1	–	–	6	–	28	1	–	–	–	–	–
	408Y/277	–	10	–	–	–	–	5	1	–	1	–	4	–	–	26	5	–	–	–	–	–
	240Y/138	–	–	20	–	–	–	5	–	1	1	–	–	6	–	32	3	–	–	–	–	–
Spades																						
3-100	**208Y/120**	–	–	–	20	–	–	–	–	–	–	–	–	–	–	–	–	1	–	–	6	–
	408Y/277	–	–	–	10	–	–	–	–	–	–	–	–	–	–	–	–	1	–	–	4	–
	240Y/138	–	–	–	20	–	–	–	–	1	–	–	–	–	4	–	–	1	–	–	4	–
3-167	**208Y/120**	–	–	–	30€	20€	–	–	–	–	–	–	–	–	–	–	–	1	–	–	10€	6€
	408Y/277	–	–	20	–	–	–	–	–	–	–	–	–	–	–	–	–	1	–	6	–	–
	240Y/138	–	–	–	20	–	–	–	–	1	–	–	–	–	4	–	–	1	–	–	4	–

§ Does not include cable between transformers and service or collector buss/clusters.
▲ Transformers with cable leads come with lugs.
* Extra long barrel terminal lug Stock No. 012729.
€ Option 2-750 is preferred, 3-500 is an option.

Figures 12, 13, and 14: 240Y/138 Volt Connection and Cable

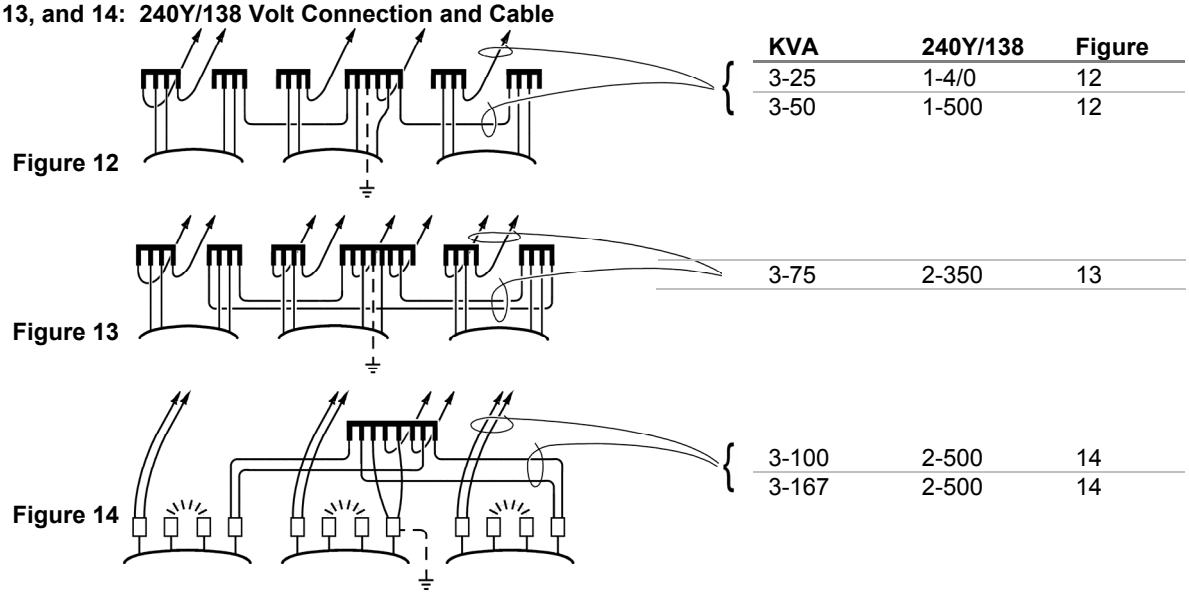

KVA	240Y/138	Figure
3-25	1-4/0	12
3-50	1-500	12
3-75	2-350	13
3-100	2-500	14
3-167	2-500	14

General Notes

1. Cable tagging per U4-3.3

2. If J-Boxes, switches or other primary equipment is installed in the same vault, connect the primary neutrals to the primary neutral bus. (Equipment grounds may be attached to the ground bus.)

3. Primary cable to route so that it is racked on at least 2 walls.

4. Generally, secondary is racked above primary.

5. Install high voltage sign (Stock No. 765181) and lock (URD-SNM-1) on all above grade installations.

6. Generally, up to 4 sets of service cables may be connected directly on the transformer spades or cluster connectors providing:

6.1 Service cables are no larger than 500 kcmil if to be connected on residential/light commercial-industrial type cluster connectors.

6.2 Service cables are no larger than 750 kcmil if to be connected on the transformer spades or to heavy duty type cluster connectors.

7. Cluster connectors shown on the vault walls are optional depending upon the number and size of customer service cables per phase. They must be ordered in addition to the items shown above. The following considerations apply:

7.1 Residential, light industrial or light commercial type.

- Maximum cable size is 500 kcmil per position since the cluster connector requires 7/8-inch bolt spacing, hook type lugs (Stock Nos. 678687E through 678700E).
- Available in 3, 4, 6 and 8 position with streetlight tap (Stock Nos. 678800, 678707, 678713 and 678715).
- Each cluster connector weighs approximately 4-1/2 pounds.

7.2 Heavy duty type

- Maximum cable size is 1000 kcmil per position. These connectors require 1-3/4 inch bolt spacing lugs (Stock Nos. 651255 through 651272 for aluminum and 677065E through 677100 for copper).
- Available in 4, 6 and 8 position (Stock Nos. 678760 through 678763).
- Each heavy duty cluster connector weighs approximately 16 pounds.

8. The decision on whether to use 500 or 750 kcmil cable will depend upon:

8.1 Number and size of service cables.

8.2 Heavy duty vs. "lighter" duty cluster connectors.

8.3 Number of positions available on transformer spades with or without stacking type lugs.

8.4 Hand vs. motor driven compression tools (motor driven press is required for lugs above 500 kcmil.)

9. The materials shown here are based on the use of 138/277 volt transformers (with the two secondary windings connected in series) for 480Y/277 volt services rather than 277 volt transformers.

10. See U11-9 for materials and waterproofing for transformers with spade type secondary terminals (100 kVA and larger).

11. In lieu of ground rods, 50 feet of #2 bare stranded copper wire, per rod, may be laid in the bottom of the trench in opposite directions. The wire shall be a minimum of 6 inches away from other cables, conduits or concrete encasements.

PADMOUNT PRIMARY METERING CABINET INSTALLATION

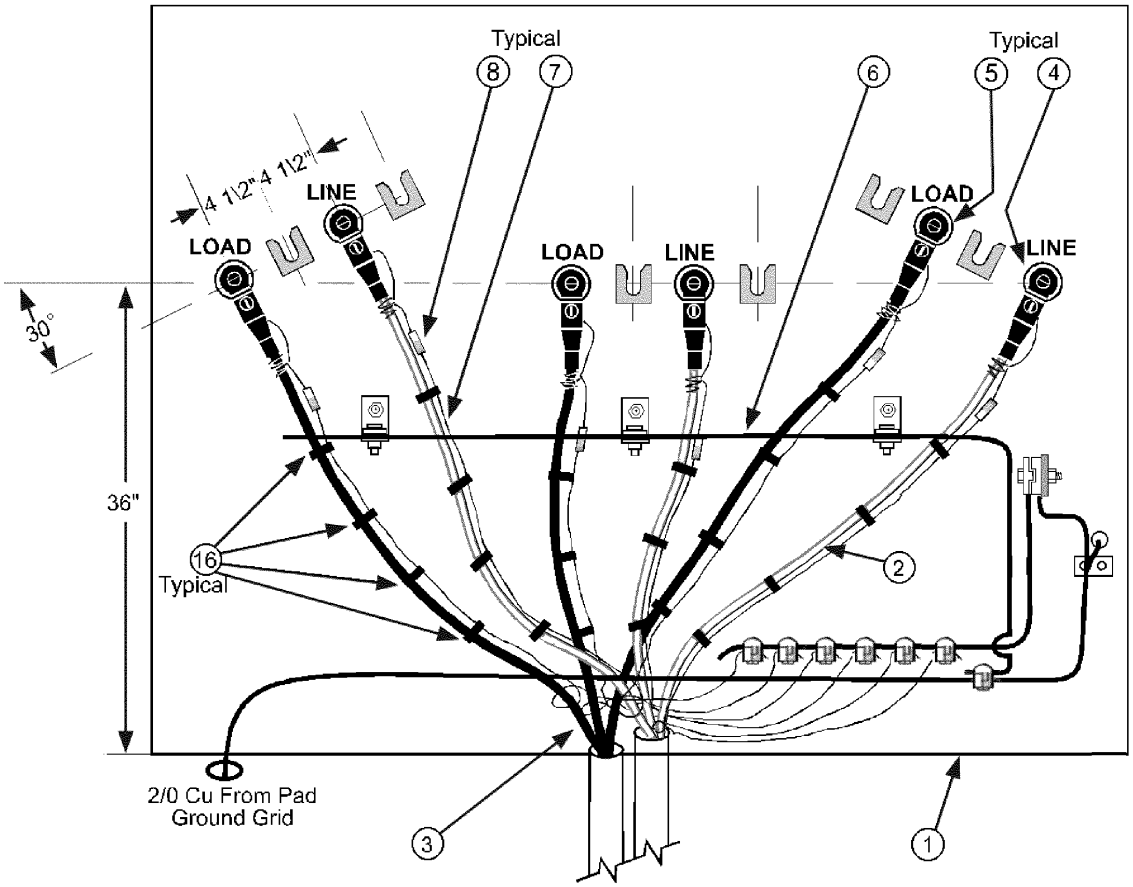

u982a.tif

MATERIAL LIST 1

Item	Quantity	Description	Stock No.
1	1	PADMOUNT METERING CABINET, 26 kV	682893
2	as req'd	CABLE, 1/0 Sol. Al., 28 kV	602025
3	as req'd	CABLE, 28 kV	—
4	3	ELBOW KIT, 1/0 Sol., 25 kV	686445
5	3	ELBOW KIT, 25 kV, cable size to be determined by engineer	—
6	6'	WIRE, #2 Cu. Sol. HD, bare	610006
7	36'	WIRE, #2 Cu. Str. SD, bare	610434
8	6	CONNECTOR, Cu. #2 -#2, 1 per elbow	677357E
16	30 est.	TIE STRAP, 7", Plastic	735805E
17	6	HOLDER, Switch Tag	581799
18	1 TU	ADHESIVE, Tube	722022
19	6	CARD, LB. Elbow Recording	686465E
20	6	TAG, Cable Identification	735800E
21	1	PAD, Concrete, customer provided, per C. L. Guideline U10-5.2.1	—
23	8	SCREW, Cap, Hex Head, 1/2" x 1-1/2", Cad. plated	784827E

ORIGINATOR	STANDARDS COORDINATOR	STANDARDS SUPERVISOR	UNIT DIRECTOR
Jim S. Horn	Charles L. Shaffer	[illegible]	[illegible]

CONSTRUCTION GUIDELINE

INSTALLATION STEPS:

A. Bolt primary metering cabinet down to the pad.
B. Punch a hole in the firewall for the ground bushing. Install the ground bushing.
C. Connect grounds.
D. Install ground bus for attaching working grounds (Item 6).
E. Connect primary cable neutrals.
F. Install elbow connectors.
G. Coordinate with meter shop for installation of PT's & CT's.
H. See C. L. Construction Guideline U10-5.2.1 for concrete pad and ground grid details.

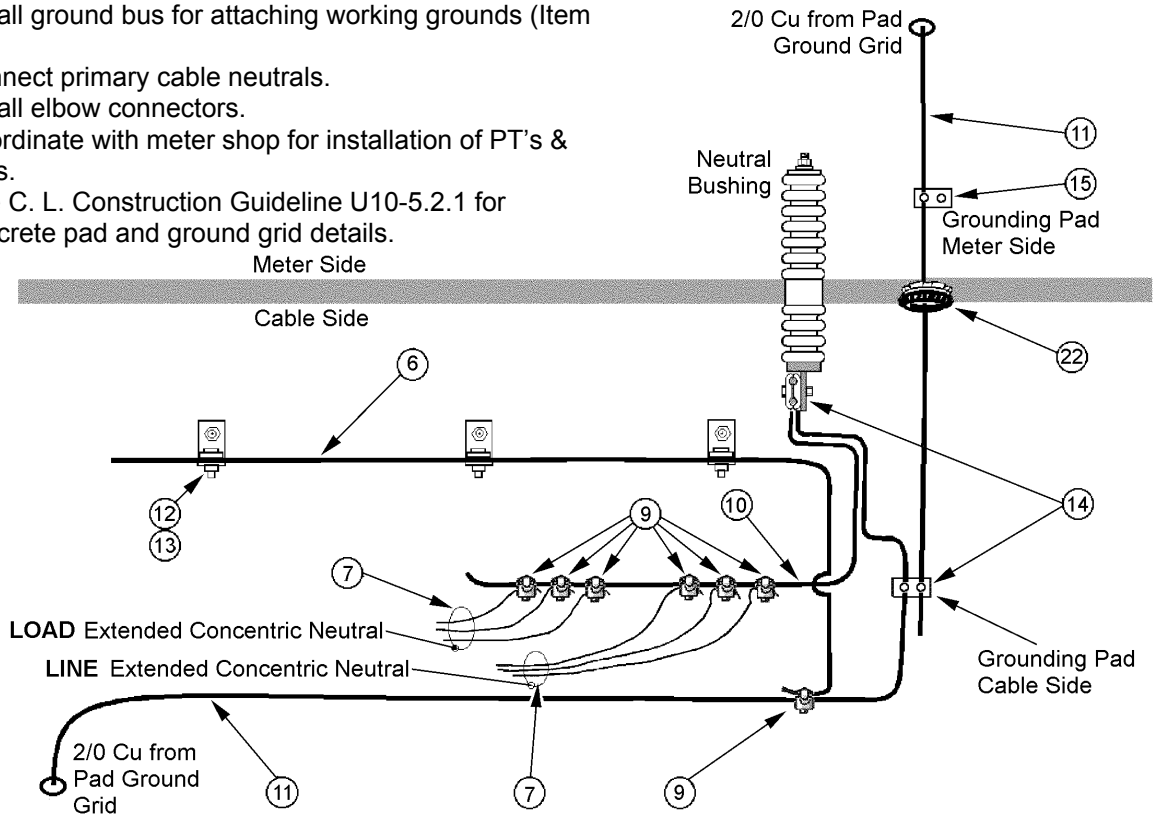

u982b.tif

MATERIAL LIST 2

Item	Quantity	Description	Stock No.
6	6'	WIRE, #2 Cu. Sol. HD, bare	610006
7	36'	WIRE, #2 Cu. Str. SD, bare	610434
9	6	CONNECTOR, Cu. #2 - 2/0	669379E
10	6'	WIRE, 2/0 Cu. Str., bare.	610425
11	as req'd	WIRE, 2/0 Cu. Str., bare.	customer provided
12	3	CONNECTOR, 1 Cu. Cable to flat, #4 - 2/0	676674
12A	3	WASHER, Cut, Bronze, 3/8"	788024E
13	3	BRACKET, ground , Unistrut	686466
13A	3	BOLT, Machine, 1/2" x 1", Cad. plated	784825E
13B	3	WASHER, Flat, 1/2" Galv.	585025E
13C	3	WASHER, Lock, 1/2" Galv.	—
14	1	CONNECTOR, Cu., 2 Cable to flat, 2/0 - 250	676695
15	2	CONNECTOR, Cu., 1 Cable to flat, 2/0 - 250	676675
21	1	PAD, Concrete, customer provided, per C. L. Std. U10-5.2.1	—
22	1	BUSHING, Insulated, Male Type with Locknut, 3/4"	731592

TRANSFORMER PAD, COMMERCIAL AND INDUSTRIAL UNDERGROUND FROM OVERHEAD

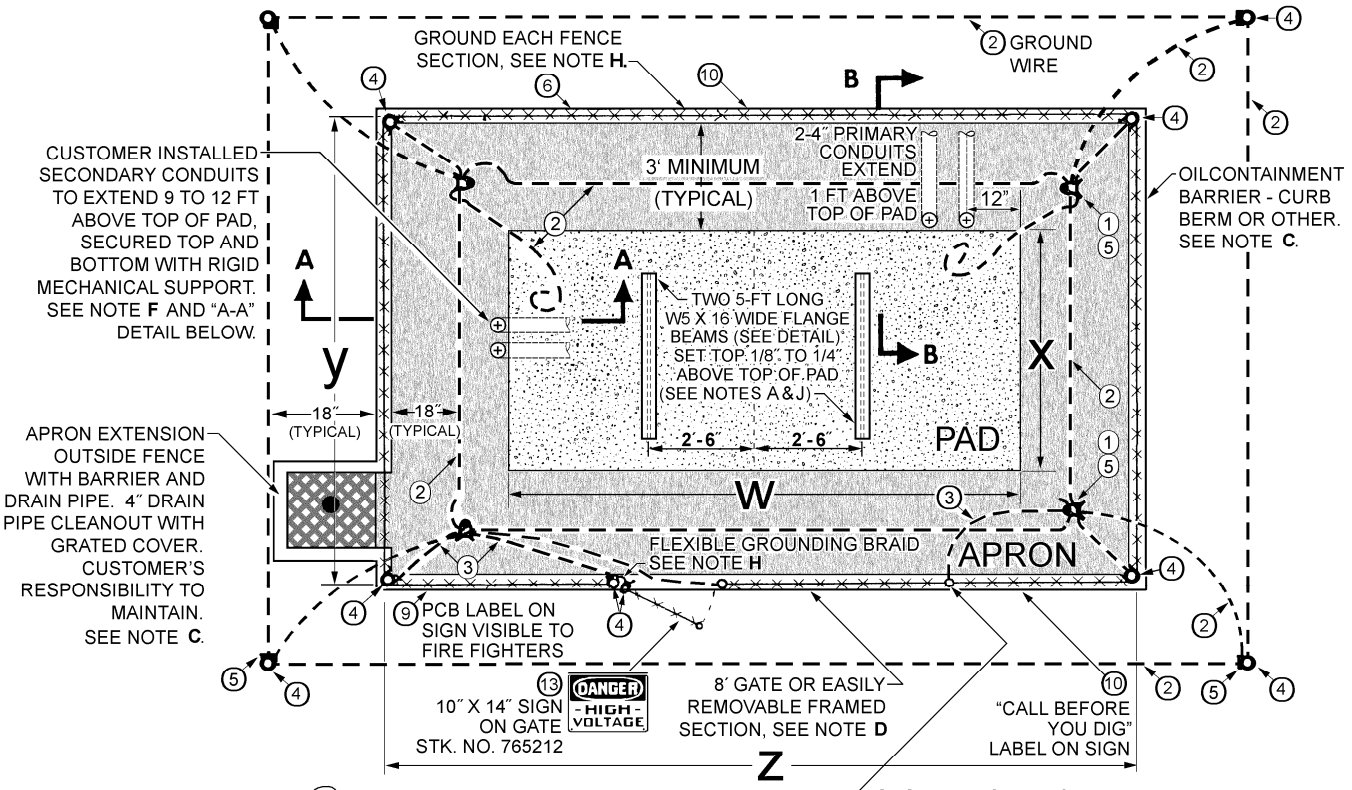

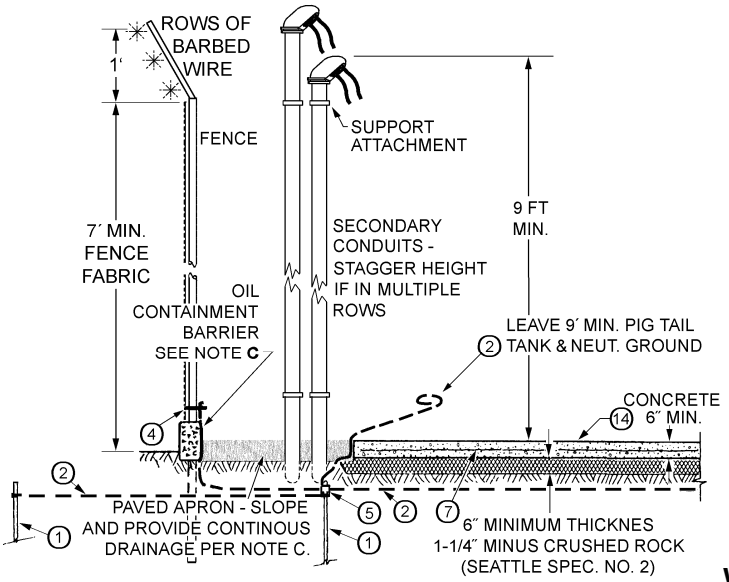

SECTION "A – A"

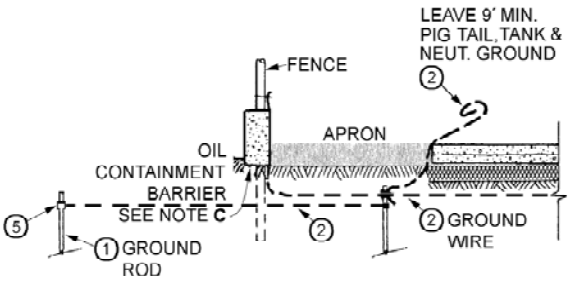

SECTION "B – B"

U1012.tif

w = _____ **x =** _____

y = _____ **z =** _____

Pad and Apron Dimensions for _____
(site location)

standards coordinator	standards supervisor	unit director
Curtis Lu	John Shipek	Pamela S. Johnson

Notes:

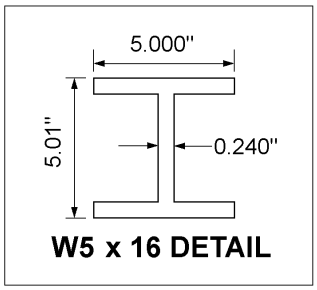

A. **Concrete Transformer Pad.** The concrete pad shall be located so that the closest edge of the pad will be 10-foot minimum from combustible buildings and all exterior doors and windows, and 3-foot minimum from non-combustible buildings. See guideline U10-2.

Reinforcing Bars shall be placed within the concrete pad in an 18-inch maximum grid approximately 3 inches above the bottom of the concrete slab (18″ O.C.E.W.). The pad shall be a minimum of 6 inches thick.

The pad shall be poured on a 6-inch bed of crushed rock, minimum.

The pad shall be poured around two 5-foot long **Steel Beams** (W5 x 16). The tops of the beams shall be set at 1/8″ to 1/4″ above the top of the pad. See the drawing on page 1 and the above W5 x 16 beam detail.

B. **Paved Apron.** The concrete transformer pad shall be surrounded by a paved apron that it will be impervious to spilled oil. The apron will extend a minimum of 3 feet from the pad edge. See the section below on fencing the apron and pad.

Gravel on bare soil for the apron area is not sufficient to meet the intent of the appropriate oil spill regulations (see below) unless soils data is provided by and stamped by a professional engineer registered in the State of Washington that certifies that the soil is sufficiently impervious to prevent the escape of oil from the containment system before cleanup occurs.

C. **Oil Containment System.** The concrete transformer pad; the paved apron; the surrounding curb, dyke, berm or other appropriate barrier; and any oil/water collection and separation system shall, together, constitute an oil containment system. The intent of the oil containment system shall be to contain all spilled oil and oil-contaminated rainwater prior to cleanup. Since this containment system is subject to rain and snow accumulation, provision is required for handling water runoff.

The oil containment system shall conform to the current requirements of the Clean Water Act, Title 40 of the Code of Federal Regulations, Part 112 (see 40 CFR 112.7(c)) as amended. For convenience, pertinent language from 40 CFR 112.7(c), current as of July 17, 2002, is quoted in part, as follows, or review the EPA web site http://www.epa.gov/oilspill/spcc.htm.

> … The entire containment system ... must be capable of containing oil ... so that any discharge ... will not escape ... before cleanup occurs. At a minimum, you must use one of the following prevention systems or its equivalent:
>
> - Dikes, berms, or retaining walls sufficiently impervious to contain oil;
> - Curbing;
> - Culverting, gutters, or other drainage systems;
> - Weirs, booms, or other barriers;
> - Spill diversion ponds;
> - Retention ponds; …

The criteria for regulation under 40 CFR 112 takes into consideration the potential for oil spill discharge into navigable waters. In the SCL service area, discharge to navigable waters would typically be of concern if there is potential discharge to storm drain systems.

Responsibility for Design, Construction, Operations and Maintenance. Design, construction, operation and maintenance of oil containment systems shall be the responsibility of the property owner including appropriate provisions for oil and water run-off and separation of oil from water and periodic collection and proper disposal of oil and oil-contaminated water.

Spill Prevention, Control and Countermeasure (SPCC) Plans. For Seattle City Light-owned transformers located on private property, preparation of SPCC plans in conformance with 40 CFR 112 shall be the responsibility of the property owner.

D. **Fence.** The pad and apron shall be enclosed by a fence of Cyclone quality or equal. The fence fabric shall be a minimum of 7-foot high (NESC required) to be topped by another foot of barbed wire. The fence line shall be set at a minimum of 3 feet from the pad edge. The fence shall be placed along and outside the oil-stop barrier such as a curb of concrete or asphalt (See Oil Containment System, above).

Gate. The fence shall contain a 3-foot, 6-inch gate. The gate shall have provision for a padlock.

Eight-Foot Opening. In addition to the main gate, the fence shall include another gate or easily removable **and** framed section to be 8 feet wide.

Grounding Fence and Gate. Each section of fence wire fabric shall be grounded with No. 8 or larger copper to fence post ground wire. Grounding is to include the gate and removable sections. Reference NESC Rule 92E4.

E. The primary **Terminal Pole** shall be designated by City Light.

F. **Secondary Circuit and Conductors**. If conduit is installed instead of bus duct by the customer, the customer shall furnish and install the phase and neutral conductors of sufficient length to connect to the transformer terminals with a maximum of 6 conductors per phase and neutral and a maximum size of 750 kcmil.

Conduit for secondary shall extend 9 to 12 feet above the pad (9 feet minimum) and shall be secured top and bottom with rigid mechanical support. If the pad is adjacent to the service building, the secondary conduits may extend, above ground, from the building (inside the pad) before extending vertically to the proper height. If the secondary conduits are laid out in rows extending outward from the pad, the height of the tops (weatherhead) should be staggered in height with the back row higher than the front row (from the pad edge). The location of the customer-installed secondary conduit shall be determined by Seattle City Light.

G. **Secondary Bus Duct.** If bus duct is installed instead of conduit and cable by the customer, City Light shall furnish and install the phase and neutral conductors from the transformer to the bus duct. The customer shall provide approved compression type terminals on the bus duct. The number of terminals and size shall be determined by City Light. The bus duct shall extend approximately 18 inches beyond the fence. The bottom of the bus shall be 9 feet above the concrete pad.

H. **Grounding.** Eight ground rods shall be driven at the corners, 4 inside the fence and 4 outside the fence, using a driving head to prevent damage to the ground rod threads. See drawing on page 1 for details.

The resistance of the grounding system shall not exceed 25 ohms. Install additional ground rods or other grounding electrodes (with prior approval from SCL engineering) until resistance is below 25 ohms. Reference 2007 NESC Rule 96D.

The **Ground Wire** shall not be spliced.

Ground each fence post to a ground rod. Reference 2007 NESC Rule 92E5.

Ground each section of fence wire strand with No. 8 or larger copper to fence post. Grounding is to include the gate and removable sections with flexible braid as required. Reference NESC Rule 92E4.

If grounding is under concrete or asphalt, all connections shall be done by exothermic welding (Cadweld or better).

I. **Signs** City Light will install the following signs on the pad fence:

- **PCB content** label (one sign from item 9). Choose from one of four different pressure sensitive labels indicating PCB content ranges matching the PCB content of the energized transformer coolant. Note, the PCB label must show the same PCB levels as indicated on the transformer label. See the material list for content labels. Mount two appropriate labels on 7″ x 10″ fiberglass signs (item 11) and hang the signs on the pad fence with cable ties. Locate the signs where they will be visible to fire fighters.
- **"Call Before You Dig"** pressure sensitive label. Mount two labels on 7″ x 10″ fiberglass signs (item 11) and hang on the pad fence with cable ties. Where appropriate, one sign can face the street and other can face the customer's building.
- **"Danger High Voltage"** fiberglass sign, 7″ x 10″. Use for mounting the above labels – items 9 and 10.
- **"Danger High Voltage"**, 10″ x 14″, item 13. Mount this sign on the pad gate with cable ties.

Tie wraps shall be used to attach all of these above signs.

In addition to the above signs, a **"Danger High Voltage"**, pressure sensitive label (item 8) is to be mounted on the transformer.

J. All **Structural Steel** used in the installation shall be per ASTM A 36. Paint with one coat of Devoe Coatings Bar-Rust 235.

K. **Gravel and Crushed Rock** (Section "A-A") shall be per City of Seattle Standard Specifications Section 9-03.16 Mineral Aggregate Chart.

L. Material List

Item	Quantity	Description		Material Std.	Stock No.
1	8	GROUND ROD, 5/8″ X 8′, copper clad steel, sectional		5642.1	564238E
2	200′ (est.)	WIRE, 2/0 bare stranded copper, SD		6103.9	610425
3	10′ (est.)	WIRE, #2 bare stranded copper, SD		6103.9	610434
4	6 (est.)	CONNECTOR	#4 thru 2/0 to 1-1/4″ IPS	6762.7	676271
			#4 thru 2/0 to 1-1/2″ IPS	6762.7	676277
			#4 thru 2/0 to 2″ IPS	6762.7	676283
5	8	CONNECTOR, 2 cables (#4 thru 2/0) to 5/8″ rod		6762.7	676551
6	as req'd.	FENCE fabric, 7′, 9 gauge, with 3 strands of barbed wire on support pipe with 3″ spacing between strands, Cyclone or equal.		–	–
7	as req'd.	REINFORCING BAR, #5		–	–
8	1	LABEL, "Danger High Voltage", pressure sensitive, to be mounted on transformer.		–	765182
9	2	LABEL, pressure sensitive. Label states PCB content in energized transformer coolant. Mount labels on a 7″ x 10″ fiberglass sign (item 11) and hang on the pad fence with cable ties. Locate the signs (2) where visible to fire fighters. *PCB label must show the same PCB level as that on the transformer*:			
		transformer with PCB content of 500 ppm or greater (yellow)		–	765201
		transformer with PCB content from 50 to less than 500 ppm (white)		–	765208
		transformer with PCB content of 1 to less than 50 ppm (blue)		–	765206
		transformer with PCB content less than 1 ppm (green)		–	765211
10	2	LABEL, "Call Before You Dig." Mount labels on a 7″ x 10″ fiberglass sign (item 11) and hang on the pad fence with cable ties, one sign, facing street, one facing the customer's installation.		–	765255E
11	4	SIGN, "Danger High Voltage" fiberglass, 7″ x 10″. Use for mounting labels – items 9 and 10 above.		7651.10	765181
12	20	TIE, Cable, black, 7″		7358.1	735805E
13	1	SIGN, "Danger High Voltage", 10″ x 14.″ Mount sign on the pad gate with cable ties.		7652.0	765212
14	as req'd.	CONCRETE, Class B – 6-sack mix		City of Seattle Std. Specs. 6-02.3(2)A	–

PADMOUNT TRANSFORMER INSTALLATION, GROUNDING AND CONNECTIONS 240/120 V, 1Ø, 3W, 25 THROUGH 167 kVA

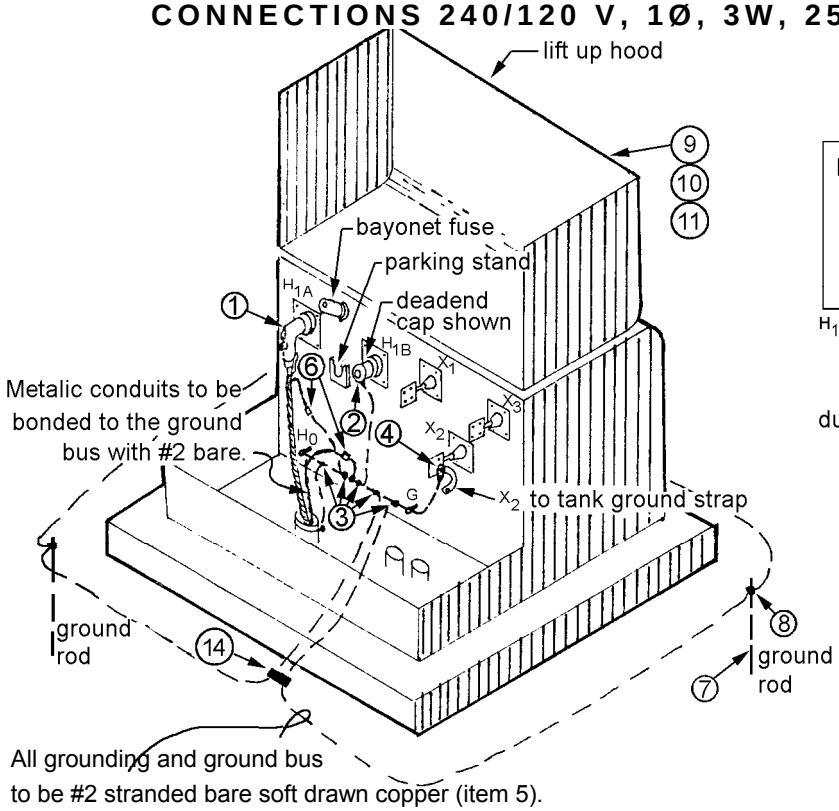

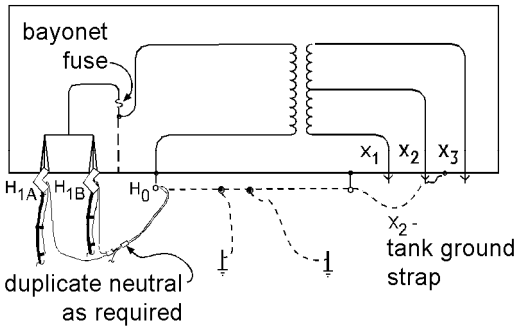

Connect neutrals together before connecting to H_O bushing and make only one connection from the neutrals to the H_O bushing.

Ground rods shall test to 25 ohms or less.

All grounding and ground bus to be #2 stranded bare soft drawn copper (item 5). Ground bus must form complete rectangle as shown. If grounding is under concrete or asphalt, all connections shall be done by exothermic welding (Cadweld or better).

The pad shall be located so that the closest edge of the pad will be 10´ minimum from combustible buildings and all exterior doors and windows, and 3´ minimum from non-combustible buildings.

Material List

Item	Quantity	Stock No.	Description	Matl. Std.
12	1	as required	TRANSFORMER, padmount, 1 Ø, kVA size as required	–
1	1 or 2*	686416	ELBOW, deadbreak, 15.2 kV L-G	6864.0
2	0 or 1*	686411	CAP, deadbreak, 15.2 kV L-G	none
3	6	677326E	CONNECTOR, crimpet, #2 to #2	6773.5
4	1	677071E	TERMINAL, compression Lug, #2	6770.7
5	10´ or 50´ *	610434	WIRE, #2, bare Cu, soft drawn	6103.9
6	1 or 2*	677357E	SPLICE, compression, #2 to #2	6773.8
7	0 or 2*	564238E	ROD, ground, 5/8˝ x 8´, Cu clad	5642.1
8	0 or 2*	564012E	CLAMP, ground rod, 5/8˝ to #2	5640.3
9	1	765181	SIGN, "Danger High Voltage"	7651.10
11	1	765255E	LABEL, "Call Before You Dig"	none
13	4 to 8	735805E	STRAP, plastic tie, 7˝	7358.1
14	1	669379E	TAP, two-bolt parallel, #2 to #2/0	6693.7

* Quantity will vary depending upon: 1) Radial or loop feed, and 2) Previous installation of ground rods and bus.

standards coordinator	*standards manager*	*unit director*
Curtis Lu	John Shipek	Pamela S. Johnson

PADMOUNT SWITCH INSTALLATION GUIDELINE

Covering PMH-9 Switches (pages 2 –4) and PMH-5 Switches (pages 5 –7)

A. Instructions

1. See U10-5.2 for pad construction and grounding. The pad is usually provided by the customer. Also shown are the required clearances around the switch.

2. Install switch per manufacturer's instructions.

3. Install cable terminations per manufacturer's instructions. Cold shrink terminations are preferred. Use "pig tail" connectors for cables. If pig tail is too small to fit into connector that comes on the switch, crimp on a copper straight connector to increase the diameter. Torque connector bolts to 50 ft./Lbs.

4. Make only one connection between the primary neutral and the grounding conductors.

5. When installing a PMH-5 switch and all cables are drain wire construction, connect drain wires together but do not ground.

6. See Class 68 of the Stock Catalog for "K" curve, "E" curve and full range "X" curve fuse options stocked.

7. See Class 20 of the Stock Catalog for Fault Fiter control module protection options stocked.

8. For PMH-12 installation, use the PMH-9 information here and adjust material quantities and grounding for one more 200 ampere fused compartment and one less 600 ampere switch compartment.

9. Use a 4/0 neutral in locations where the fault current is 20,000 amperes and above. Use a 2/0 neutral in locations where the fault current is below 20,000 amperes

10. Install three Stock No. 581799 switch tag holders on the inside of the doors on all 200 ampere switch ways. Install one switch tag holder on the inside of the doors on all 600 ampere switch ways. Use Stock No. 722022 adhesive.

11. Install a type SNM-1 padlock on each switch door and each switch operating handle compartment.

12. Install the switch number on the upper left corner of a switch door that can be seen from the street. Install compartment identifying letters on the outside of each switch compartment near the top of the door. Use yellow and black 2-7/8-inch reflective Mylar adhesive letters (shown in Class 76 of the Stock Catalog) for both of the above.

13. Install the following three signs on a switch door on the front and the black of the switch: (1) "Danger High Voltage", (2) "Call Before You Dig" and (3) "Certified NON-PCB". The "Certified NON-PCB" sign is necessary to assure the Seattle Fire Department that there is no PCB hazard (even though these switches contain no oil.)

standards coordinator	standards manager	unit director
John Shipek	John Shipek	Pamela S. Johnson

B. Material List, PMH-9

Item	Description		Quantity	Stock No.
1*or*	PADMOUNT SWITCH, 3 Ø switched compartment and 3-200 A 3 Ø fused compartments	PMH-9, 2-600 A	only 1 EA	250190
1A	*pick one out of two:*	PMH-12, 1-600 A	only 1 EA	250191
4	CABLE, 1/0, 28 kV, Al, concentric neutral		as required	602025
5	CONCENTRIC NEUTRAL from 1/0 solid 28 kV cable, 13 #14. (Typical each phase in compartments C&D.)		as required	–
6	CABLE, 28 kV feeder, 350, 500, 750, or 1000 kcmil		as required	–
7	FEEDER CABLE, drain wires or flat strap (Typical each phase in compartments A & B.)		as required	–
9	TERMINATOR, Cold Shrink, 25 kV, *pick one out of four:*	#1 to 350 kcmil, concentric neutral	6 EA	686532 *or*
		kit, 500 kcmil, drain wire	2 KT	686534 *or*
		350 to 500 kcmil, flat strap	6 EA	012125 *or*
		750 to 1000 kcmil, flat strap	6 EA	012126
10	CONNECTOR, Compression, pigtail, 1/0 solid		6 EA	686056
11	CONNECTOR, Compression, pigtail, *pick one out of four:*	350 kcmil	6 EA	650578 *or*
		500 kcmil	6 EA	650579 *or*
		750 kcmil compact	6 EA	686075 *or*
		1000 kcmil compact	6 EA	686078
12	CONNECTOR, cable to flat, S&C #4745, supplied with switch		12 EA	–
13	SURGE ARRESTER, 17 kV, base mounted		6 EA	680117
14	WASHER, Flat, stainless steel, supplied with arrester, 3/8″		6 EA	–
15	WASHER, Belleville, stainless steel, supplied with arrester, 3/8″		6 EA	–
16	NUT, stainless steel, supplied with arrester, 3/8″		6 EA	–
17	Connector, stud to cable, #6 to #2		6 EA	668872
18	FUSE, *pick one out of three*	type and size as required, see note 6, *or*	6 EA	–
		SMU-20, "E" curve or "K" curve, *or*	6 or 9 EA	–
		Current Limiting, full range, "X" curve	6 or 9 EA	–
19	FITTING, Upper End, S & C SMU-20, supplied with switch		6 or 9 EA	–
20	FITTING, Lower End, S & C SMU-20, supplied with switch		6 or 9 EA	–
21	SILENCER, S & C SMU-20, supplied with switch		6 or 9 EA	–
26	TERMINAL PAD - (phase connection)		3 or 6 EA	–
27	TERMINAL PAD - (phase connection) as installed at factory		6 or 9 EA	–
28	WIRE, 2/0, bare Cu, per U10-5.2 by customer		80 FT	–
29	GROUND RODS AND CLAMPS, per U10-5.2 supplied by customer		4 EA	–
30	WIRE, 600 volt, Cu, poly insulated, *pick one out of two:*	2/0	as required	613733 *or*
		4/0	as required	613735
31	WIRE, 2/0, bare Cu, soft drawn, stranded		6 FT	610425
32	WIRE, #2, bare Cu, soft drawn, stranded		50 FT	610434
33	CONNECTOR, Compression, oil-stop, 2/0 to 2/0		1 EA	677304
34	CONNECTOR, Compression, Cu, "C", #2 to #4		12 EA	677325E
35	CONNECTOR, Compression, Cu, "C", #2 to #2		10 EA	677326E
36	CONNECTOR, Compression, Cu, "C", 2/0-4/0 to #2		2 EA	677330E
37	CONNECTOR, Compression, Cu, "C", 2/0-4/0 to 2/0-4/0		3 EA	677332E
38	TERMINAL, Compression, Cu, paddle 2/0		2 EA	677077E
39	BOLT ASSEMBLY KIT, stainless steel, 1/2″ - 13 X 2″		2 EA	782040
40	SEALANT, Electrical		1 RL	736470E
41	TAPE, plastic, electrical		2 RL	736655E
42	PADLOCK, SNM-1		6 EA	–
43	LETTERS AND/OR NUMBERS, reflective, yellow on black, 2-7/8″		as required	76-16
44	TAG HOLDERS		8 EA	581799
46	SIGN, Danger High Voltage		2 EA	765181
47	SIGN, Certified NON-PCB		2 EA	765211
48	SIGN, Call Before You Dig		2 EA	765255E

C. Figure 1, Grounding PMH-9

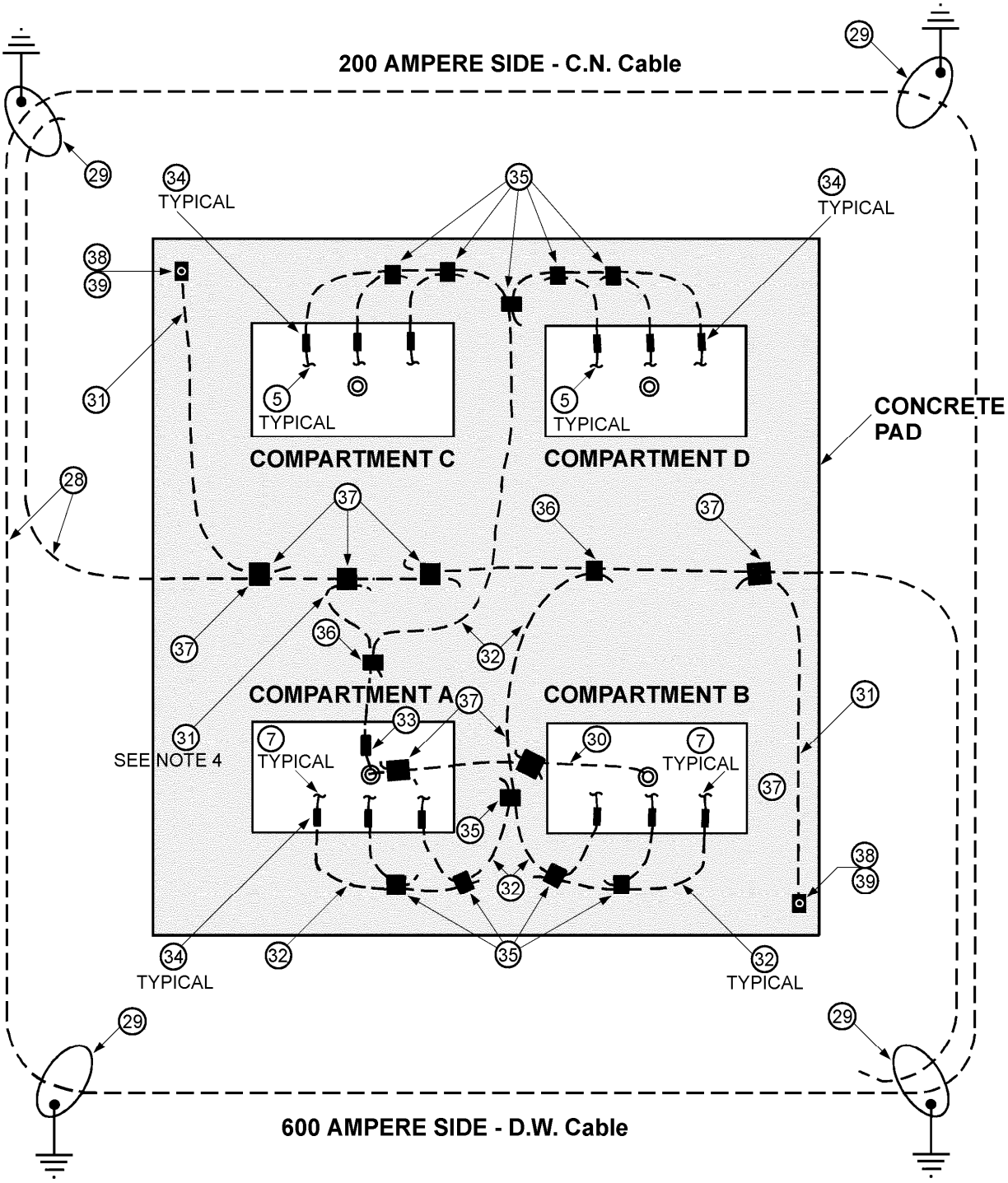

u10-5pg3.tif

D. Figure 2, Terminations and Arresters, PMH-9

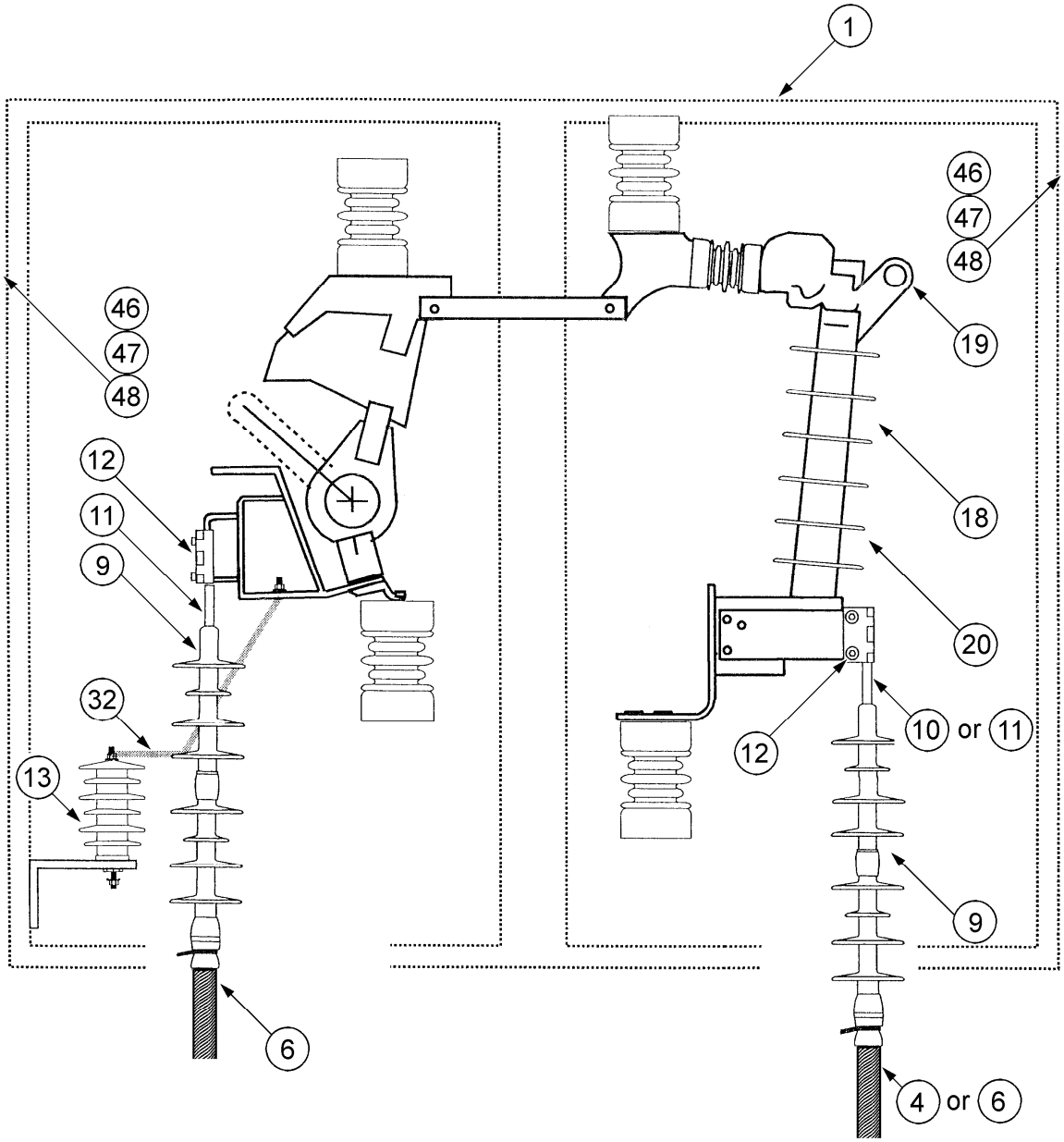

E. Material List, PMH-5

Item	Description		Quantity	Stock No.
3	PADMOUNT SWITCH, PMH-5, 1-600 A, 3 phase switched compartment and 1-200 A 3 phase fused		1 EA	250195
4	CABLE, 1/0, 28 kV, Al, concentric neutral		as required	602025
5	CONCENTRIC NEUTRAL from 1/0 solid 28 kV cable, 13 #14. (Typical each phase in compartments B.)		as required	–
6	CABLE, 28 kV feeder, 350, 500, 750, or 1000 kcmil		as required	–
7	FEEDER CABLE, drain wires or flat strap (Typical each phase in compartments A.)		as required	–
9	TERMINATOR, Cold Shrink, 25 kV, *pick one out of four:*	#1 to 350 kcmil, concentric neutral kit	3 EA	686532 *or*
		500 kcmil, drain wire	1 KT	686534 *or*
		350 to 500 kcmil, flat strap	3 EA	012125 *or*
		750 to 1000 kcmil, flat strap	3 EA	012126
10	CONNECTOR, Compression, pigtail, 1/0 solid		3 EA	686056
11	CONNECTOR, Compression, pigtail, *pick one out of four:*	350 kcmil	3 EA	650578 *or*
		500 kcmil	3 EA	650579 *or*
		750 kcmil compact	3 EA	686075 *or*
		1000 kcmil compact	3 EA	686078
12	CONNECTOR, cable to flat, S&C #4745, supplied with switch		6 EA	–
13	SURGE ARRESTER, 17 kV, base mounted		3 EA	680117
14	WASHER, Flat, stainless steel, supplied with arrester, 3/8″		3 EA	–
15	WASHER, Belleville, stainless steel, supplied with arrester, 3/8″		3 EA	–
16	NUT, stainless steel, supplied with arrester, 3/8″		3 EA	–
17	Connector, stud to cable, #6 to #2		3 EA	668872
22	FUSE, Interrupting Module, S&C “Fault Fitter”, see note 7		3 EA	259500
23	FUSE, Control Module, S&C “Fault Fitter”		3 EA	–
24	FITTING, Lower End, S & C SMU-20, supplied with switch		3 EA	–
25	FITTING, Upper End, S & C SMU-20, supplied with switch		3 EA	–
26	TERMINAL PAD - (phase connection)		3 EA	–
27	TERMINAL PAD - (phase connection) as installed at factory		3 EA	–
28	WIRE, 2/0, bare Cu, per U10-5.2 by customer		60 FT	–
29	GROUND RODS AND CLAMPS, per U10-5.2 supplied by customer		4 EA	–
30	WIRE, 600 volt, Cu, poly insulated, *pick one out of two:*	2/0	as required	613733 *or*
		4/0	as required	613735
31	WIRE, 2/0, bare Cu, soft drawn, stranded		6 FT	610425
32	WIRE, #2, bare Cu, soft drawn, stranded		30 FT	610434
33	CONNECTOR, Compression, oil-stop, 2/0 to 2/0		1 EA	677304
34	CONNECTOR, Compression, Cu, "C", #2 to #4		6 EA	677325E
35	CONNECTOR, Compression, Cu, "C", #2 to #2		13 EA	677326E
36	CONNECTOR, Compression, Cu, "C", 2/0-4/0 to #2		2 EA	677330E
37	CONNECTOR, Compression, Cu, "C", 2/0-4/0 to 2/0-4/0		3 EA	677332E
38	TERMINAL, Compression, Cu, paddle 2/0		2 EA	677077E
39	BOLT ASSEMBLY KIT, stainless steel, 1/2″ - 13 X 2″		2 EA	782040
40	SEALANT, Electrical		1 RL	736470E
41	TAPE, plastic, electrical		2 RL	736655E
42	PADLOCK, SNM-1		4 EA	–
43	LETTERS AND/OR NUMBERS, reflective, yellow on black, 2-7/8″		as required	76-16
44	TAG HOLDERS		8 EA	581799
46	SIGN, Danger High Voltage		2 EA	765181
47	SIGN, Certified NON-PCB		2 EA	765211
48	SIGN, Call Before You Dig		2 EA	765255E

F. Figure 3, Grounding, PMH-5

Fuse side shown with concentric neutral wires connected directly to system neutral. If drain wire cables are used on both sides, connect the drain wires together, but do not ground.

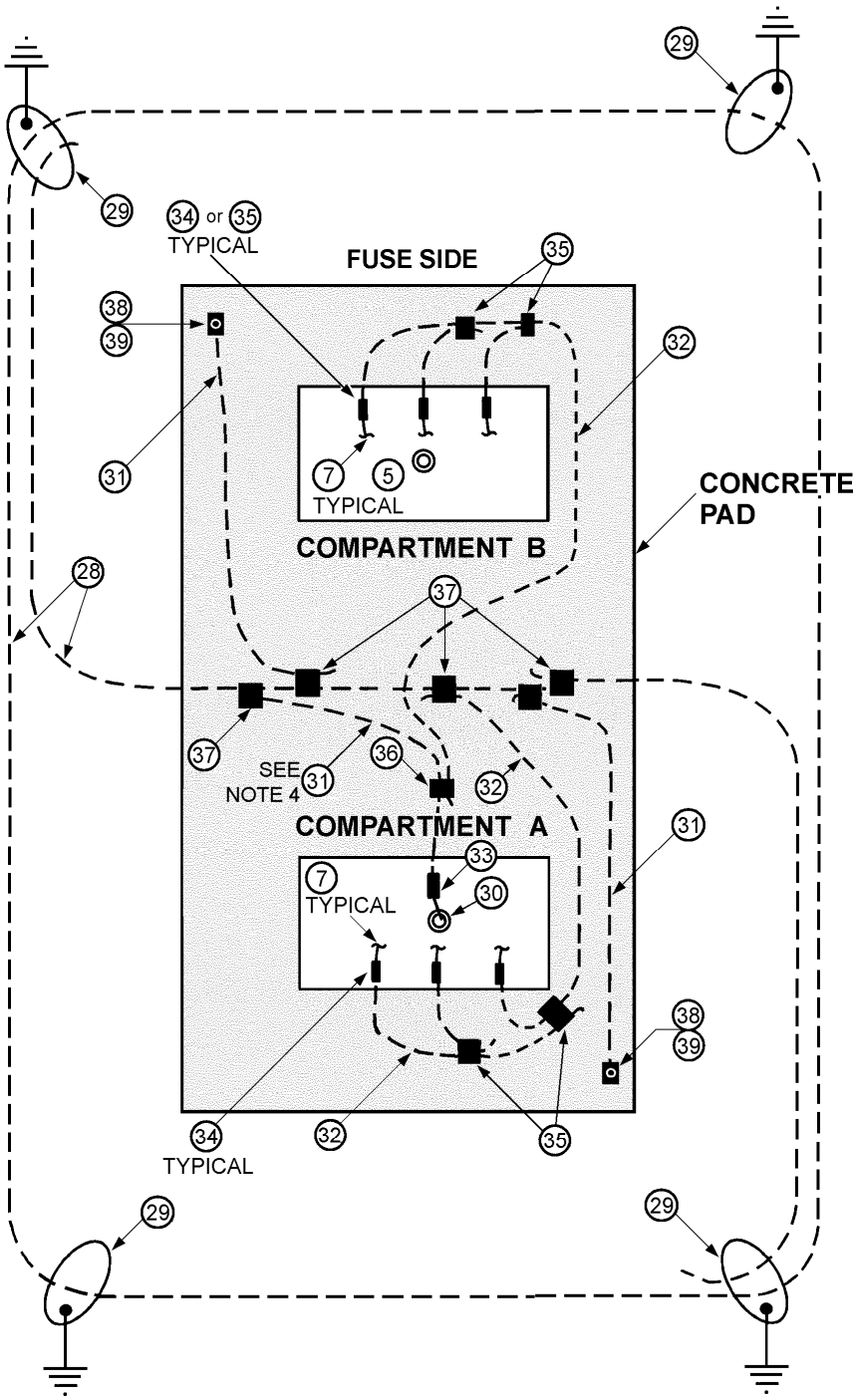

G. Figure 4, Terminators and Arresters, PMH-5 with "Fault Fiter"

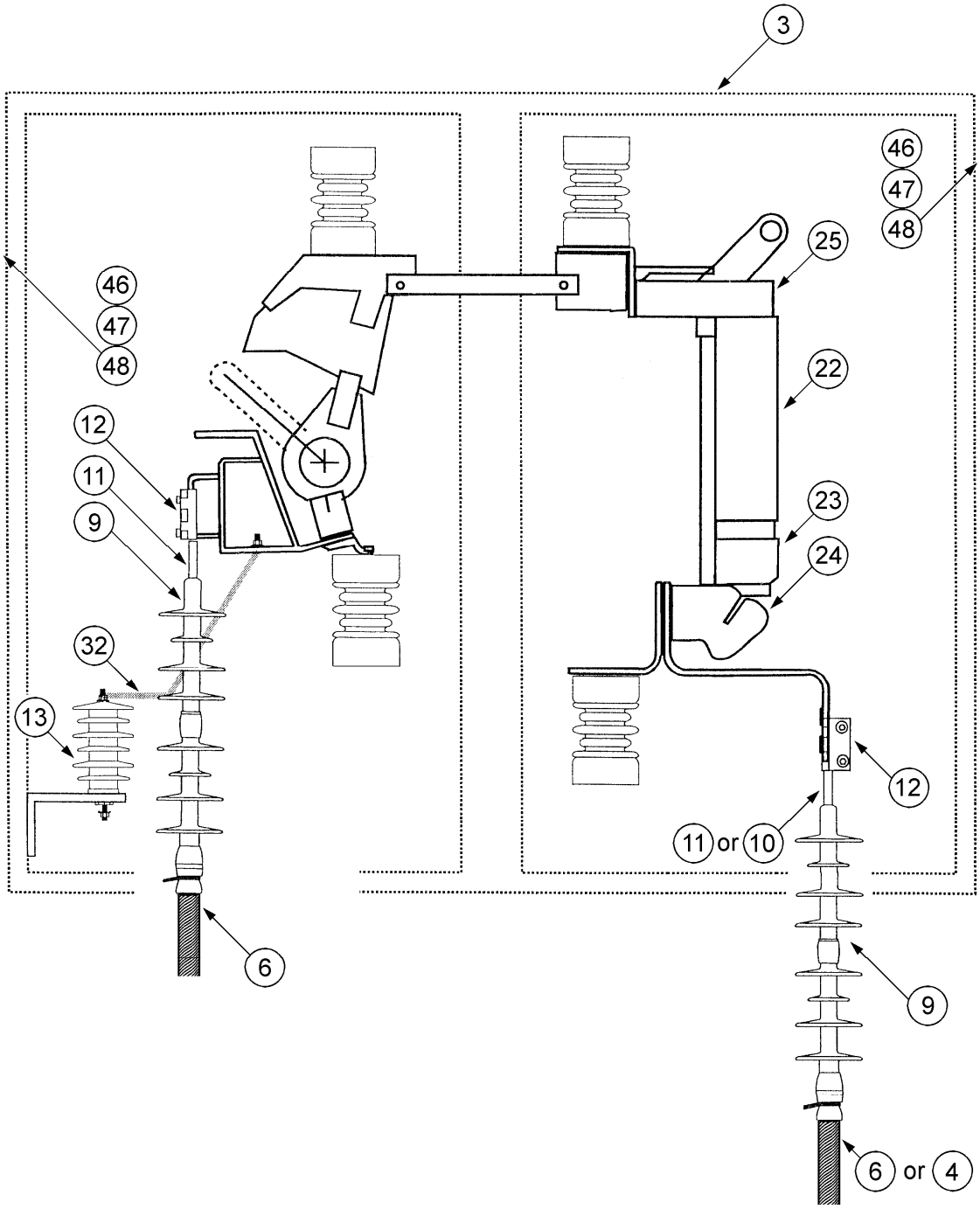

H. Figure 5, Alternative Position of Cable-Termination, Adapters for 65 X Fuse

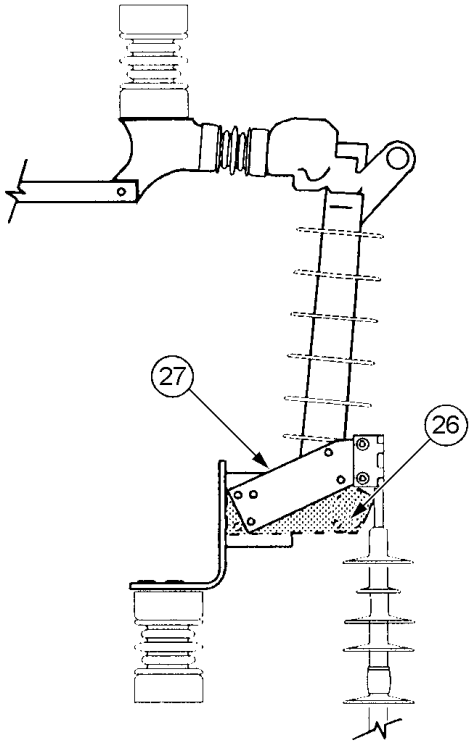

I. Figure 6, Insulating Neutral, Connection and Waterproofing Detail

Note: This procedure is necessary to keep water out of the insulated neutral conductors to help prevent neutral corrosion.

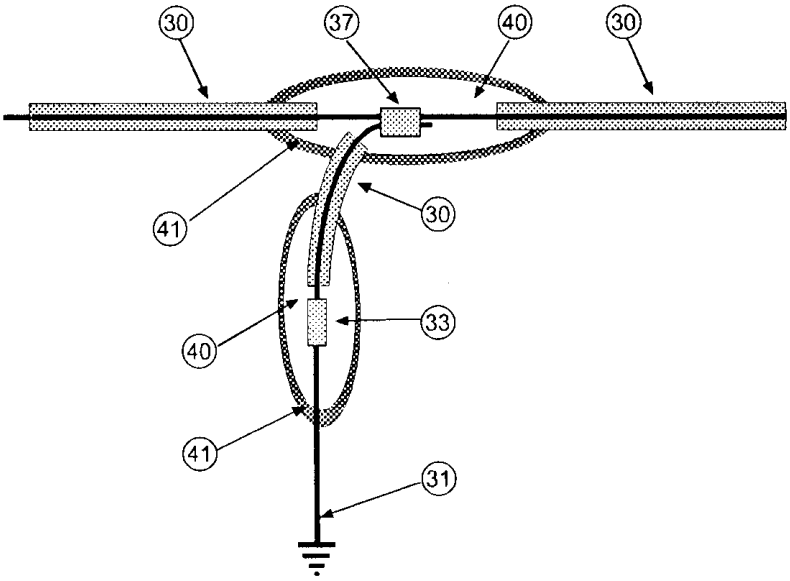

J. Figure 7, Arrester Ground Connection Detail

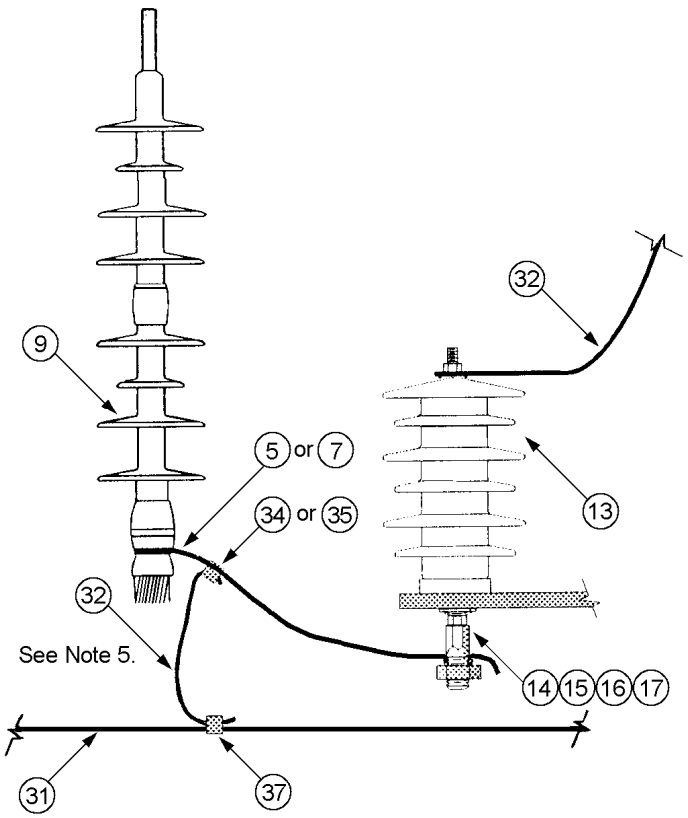

K. Figure 8, Arrester Ground Connection Hardware Detail

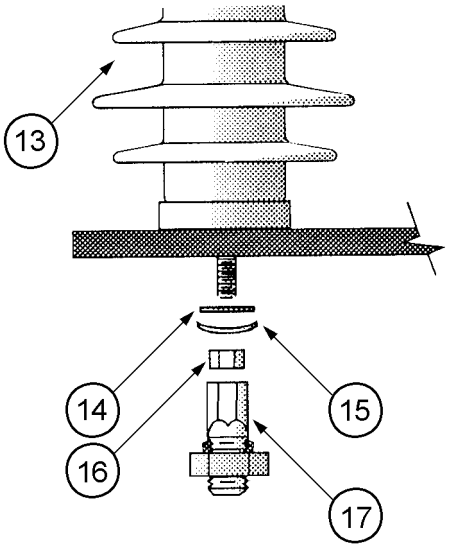

PAD CONSTRUCTION FOR PAD MOUNTED SWITCHGEAR

Minimum Clearances

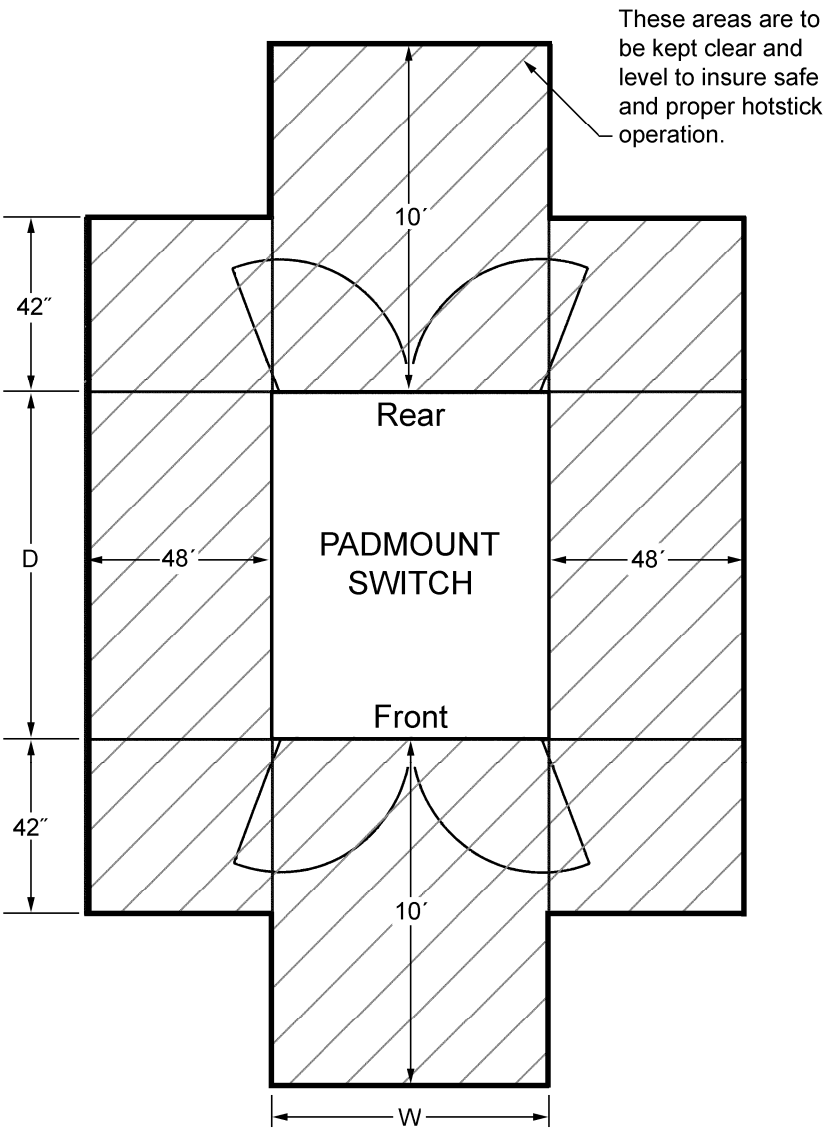

4˝ diameter steel pipe barrier posts or 8˝ curb to be specified as required.

Pad Dimensions:

PMH Switch Type	W, in.	D, in.
5	45	67
9, 10, 12	84	78-1/2

standards coordinator	*standards supervisor*	*unit director*
Curtis Lu	John Shipek	Pamela S. Johnson

Four Compartment

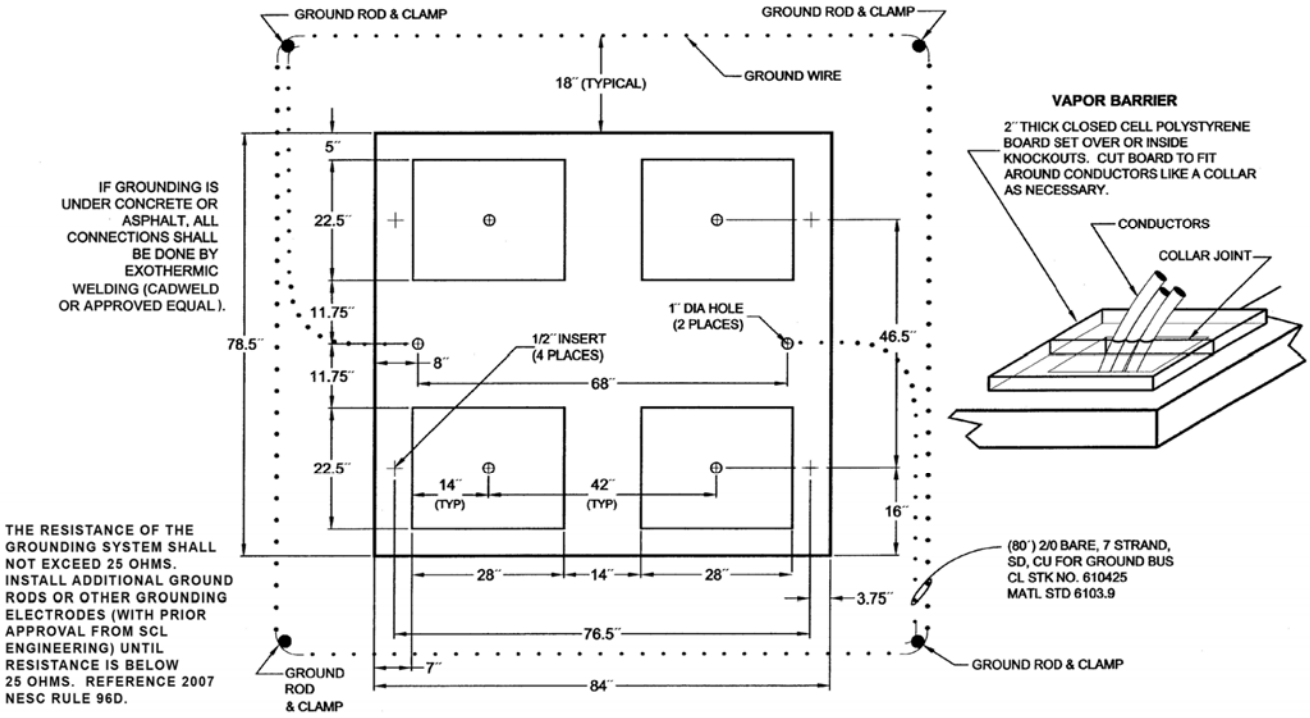

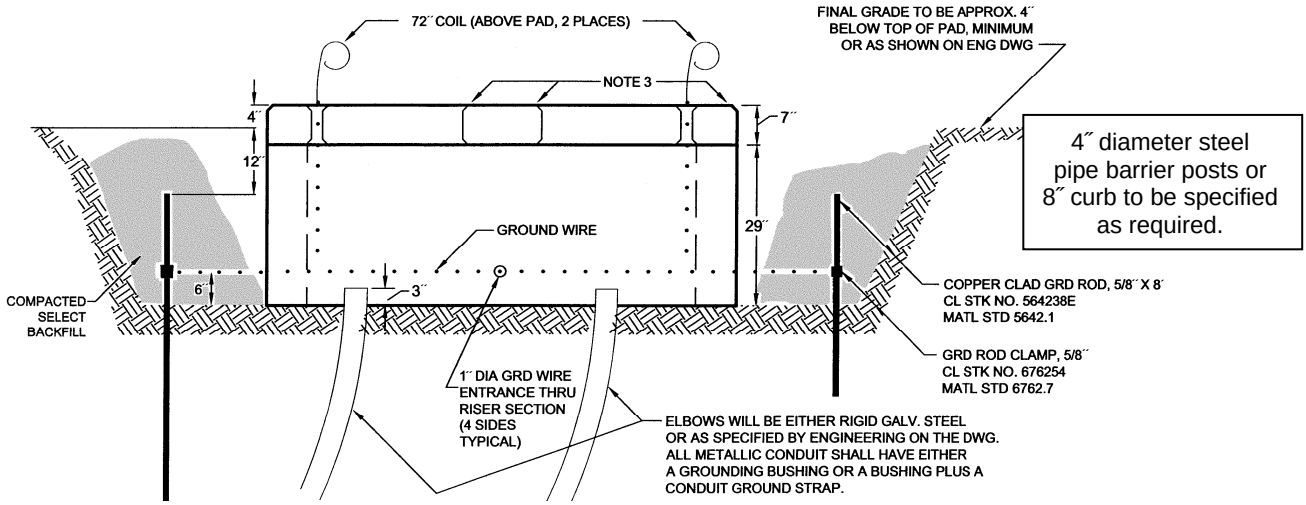

Four Compartment Notes

1. This pad assembly consists of a base and a 29″ riser. The base & riser may either be poured in place or prefabricated, and of either one or two piece construction.
2. See Seattle City Light drawing B-5704 for reinforcing and misc. construction details.
3. If poured in place, reinforcing bar must be in place and inspected by City Light before concrete pour.
4. Chamfer slab edge and cable openings one inch (1″) on all sides.
5. If used to service customer equipment, top of elbow must be below service entrance height at the customer equipment.
6. Install vapor barrier over or inside knockouts. Use 2″ closed cell polystyrene board. This is intended to be readily available material such as used in the least expensive ice chests. Cut board to fit around conductors like a collar as necessary.

Two Compartment

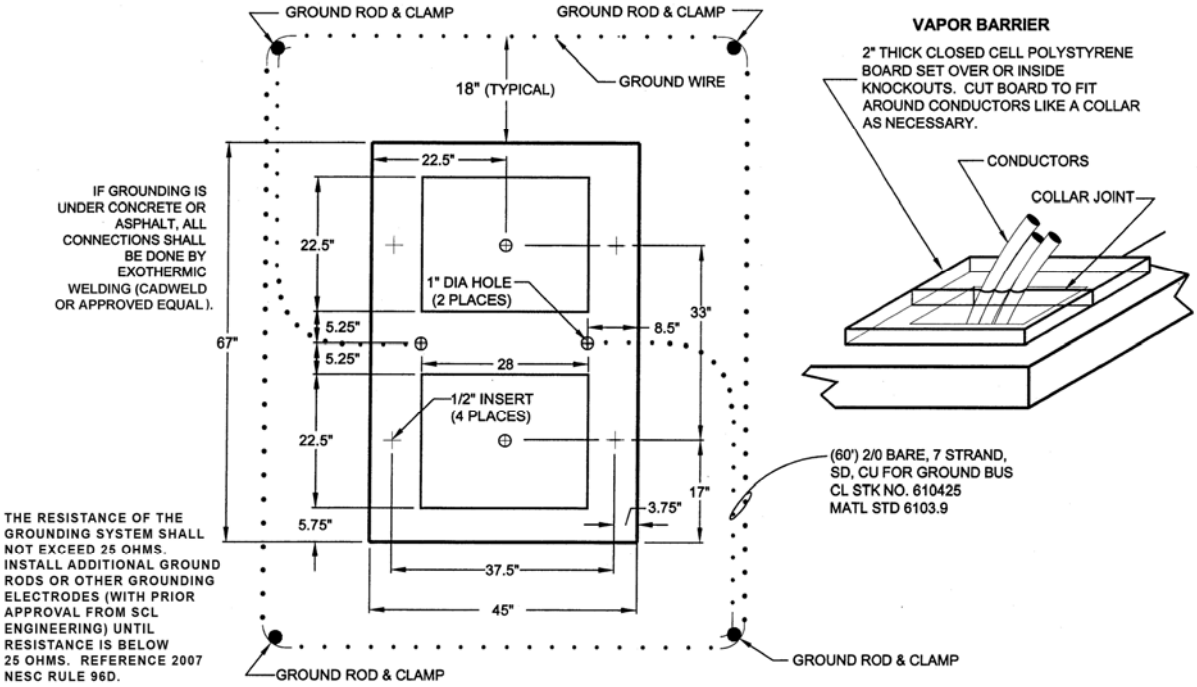

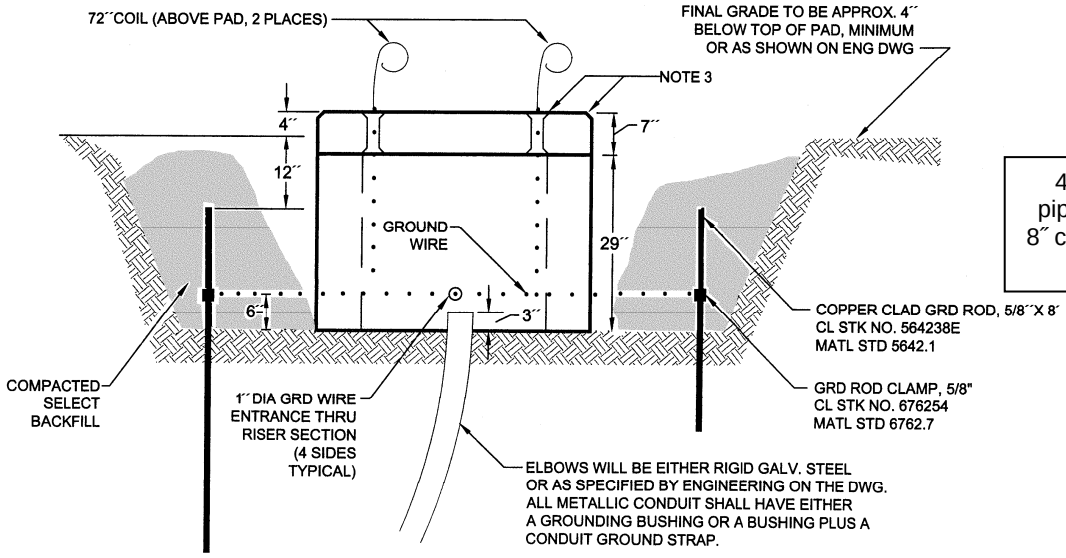

4´´ diameter steel pipe barrier posts or 8´´ curb to be specified as required.

Two Compartment Notes

1. This pad assembly consists of a base and a 29´´ riser. The base and riser may either be poured in place or prefabricated, and of either one or two piece construction.
2. See Seattle City Light drawing B-5704 for reinforcing and misc. construction details.
3. If poured in place, reinforcing bar must be in place and inspected by City Light before concrete pour.
4. Chamfer slab edge and cable openings one inch (1´´) on all sides.
5. If used to service customer equipment, top of elbow must be below service entrance height at the customer equipment.
6. Install vapor barrier over or inside knockouts. Use 2´´ closed cell polystyrene board. This is intended to be readily available material such as used in the least expensive ice chests. Cut board to fit around conductors like a collar as necessary.

PRIMARY METERING PAD
Pad Dimensions and Rebar Details

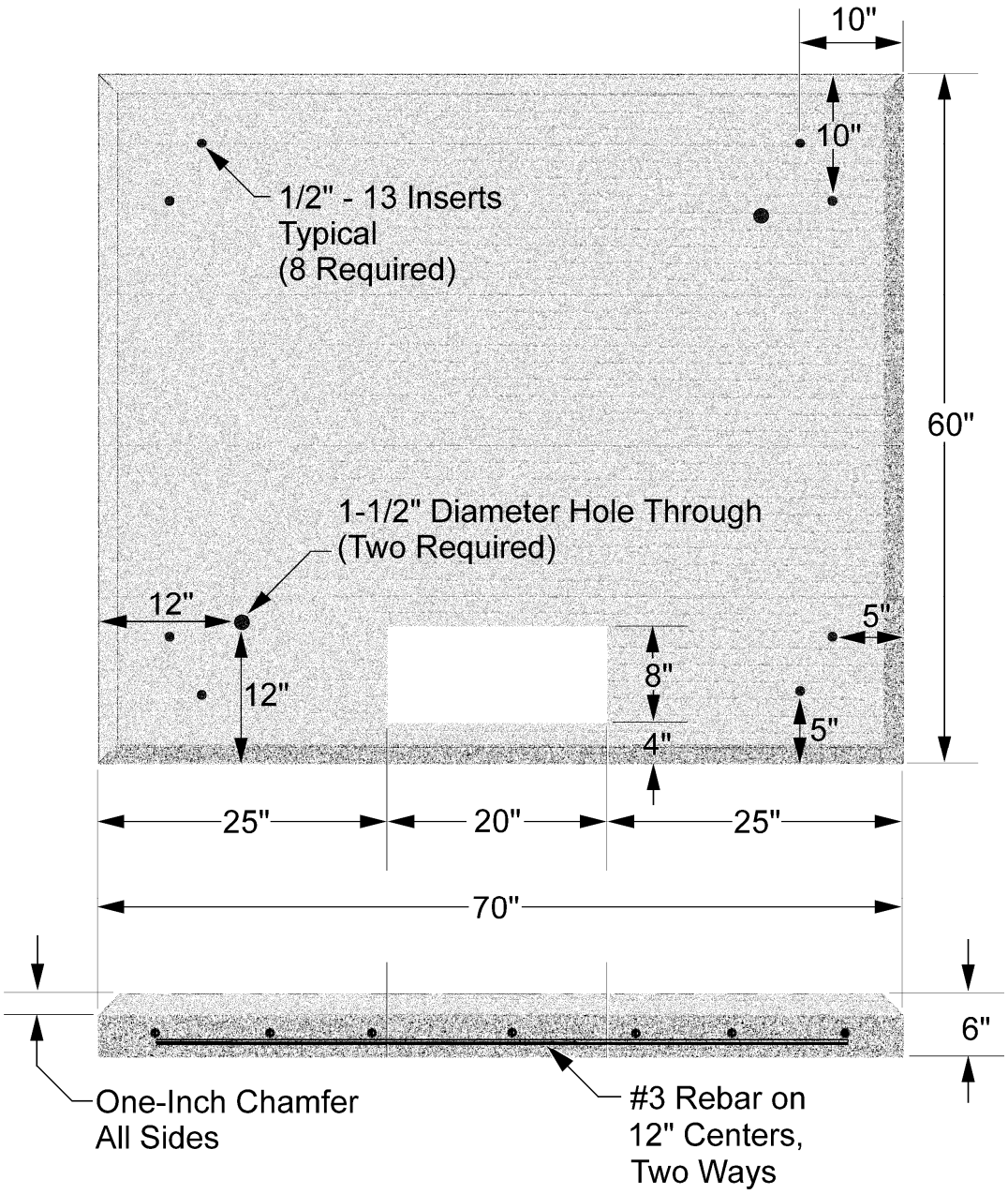

standards coordinator	standards supervisor	unit director
Curtis Lu	John Shipek	Pamela S. Johnson

PRIMARY METERING PAD
Ground and Conduit Details

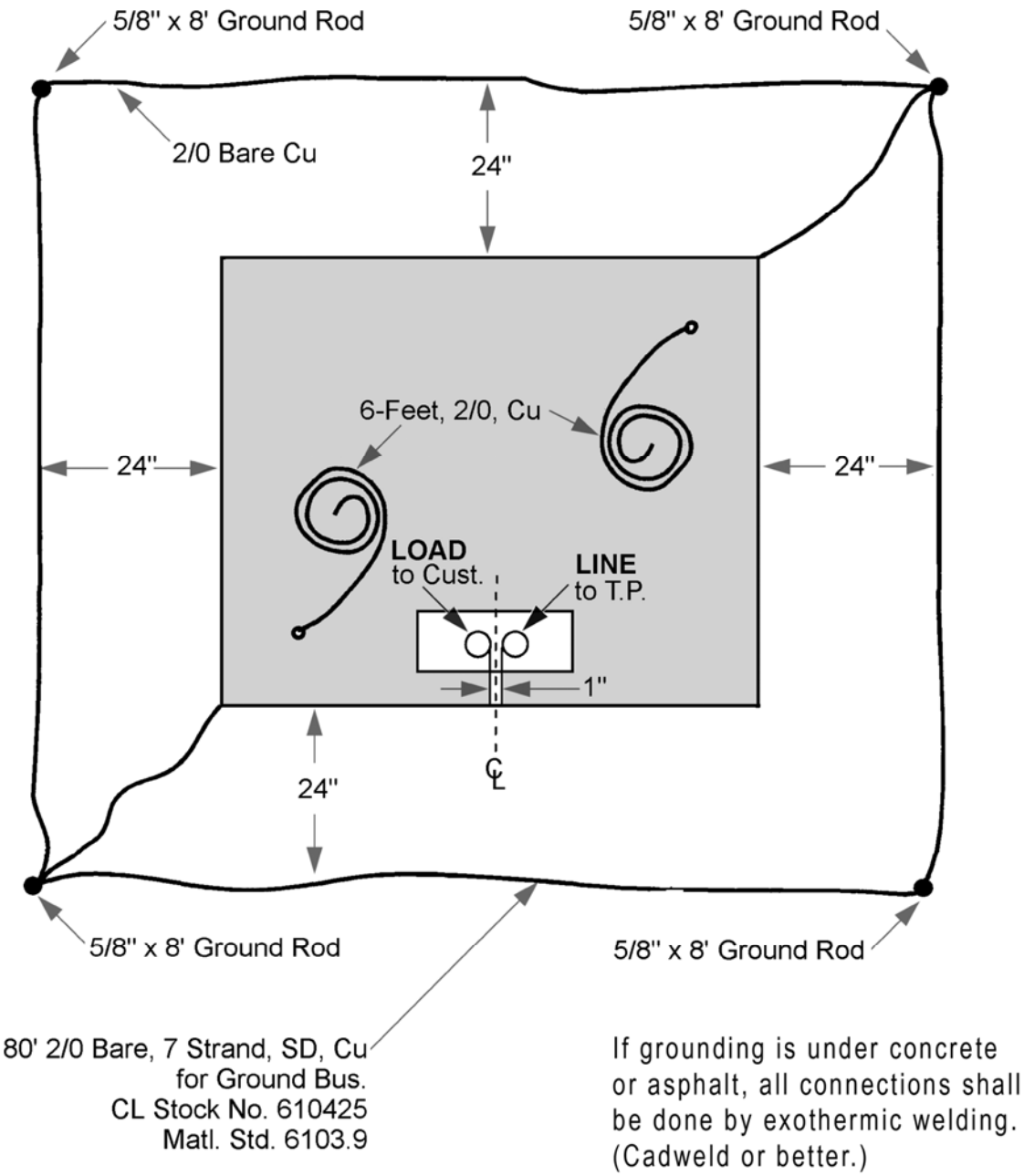

PAD PLAN VIEW

PRIMARY METERING PAD
Ground and Conduit Details

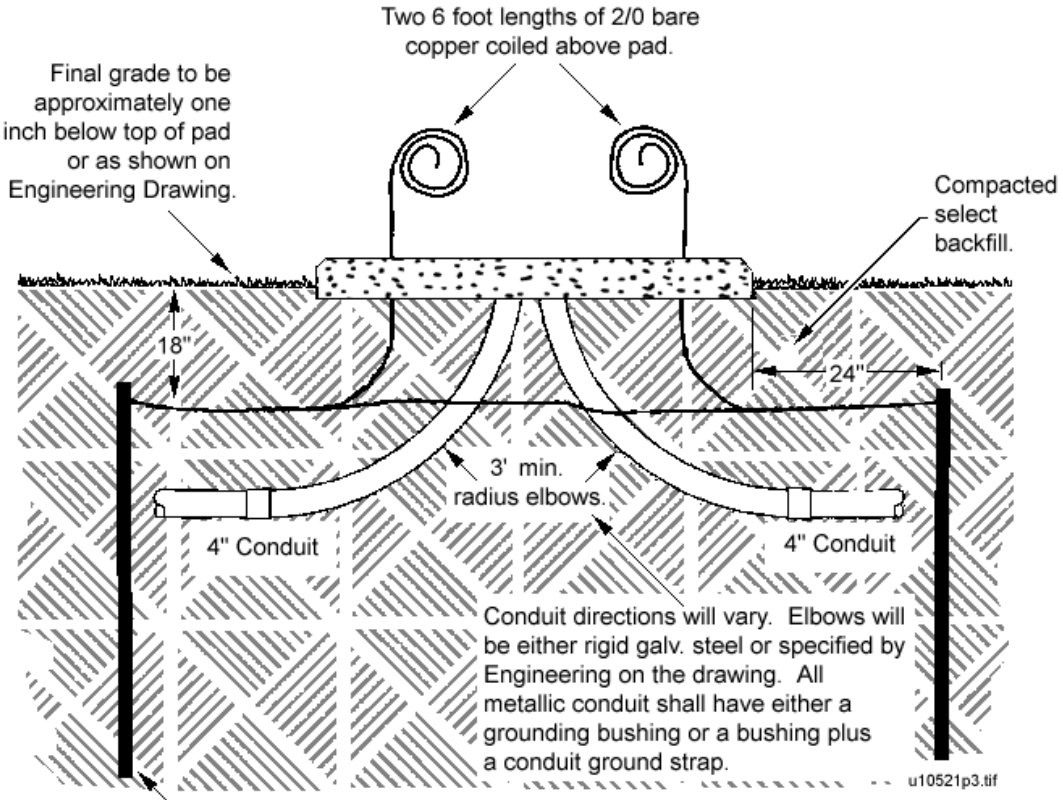

Copper clad ground rod, 5/8" x 8' C.L. Stock No. 564238E, Material Standard 5642.1. Ground rod clamp, 5/8" C.L. Stock No. 676254, Material Standard 6762.7.

The resistance of the grounding system shall not exceed 25 ohms. Install additional ground rods or other grounding electrodes (with prior approval from SCL engineering) until resistance is below 25 ohms. Reference 2007 NESC Rule 96D.

NETWORK TRANSFORMER ANCHOR BEAM FOR SEISMIC LOADING (EARTHQUAKE ANCHORS)

1. Anchor Beam, Normal Profile – Fabrication Details

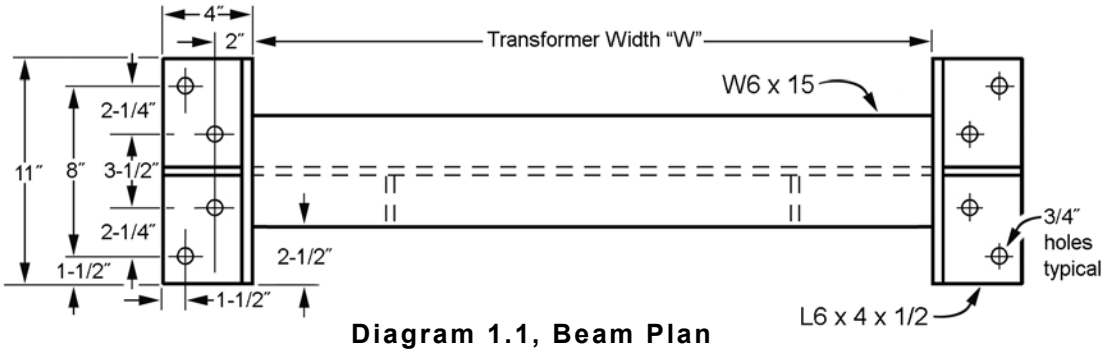

Diagram 1.1, Beam Plan

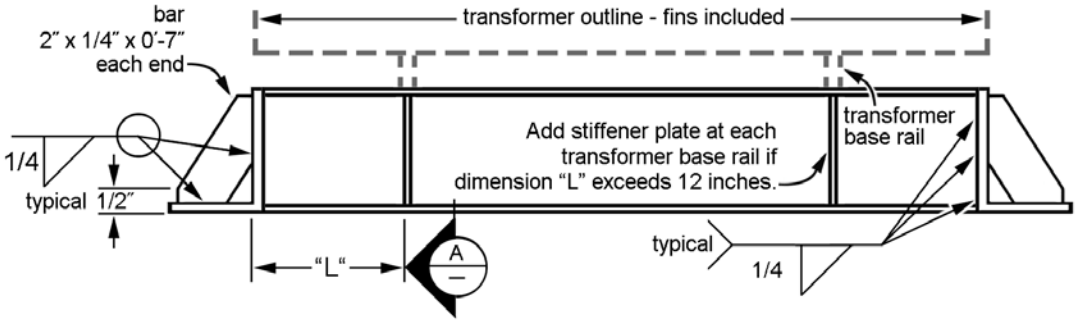

Diagram 1.2, Beam Elevation

Notes

1.1 Structural steel to be ASTM A-36.

1.2 Paint with one coat of Devoe Coatings Bar-Rust 235.

1.3 Dimensions W & L will be specified or field measured.

1.4 Two anchor beams are required per transformer.

1.5 Design data: f 'c = 3000 PSI minimum.
Allowable anchor load = 0.25 ultimate load.
33% allowable increase for seismic load.
Seismic design factors: Fh = 0.48Wt, Fv = (1+ 0.32) Wt,
Wt = Transformer weight.
Shear - tension interaction:

$$\frac{T}{T_A} + \frac{S}{S_A} < 1.0$$

T = applied tension, TA = allowable anchor tension.
S = applied shear, SA = allowable anchor shear.

1.6 See page 2 for installation details.

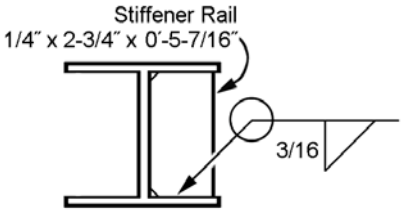

Diagram 1.3, Stiffener Detail A

1.7 See section 7 for weld specifications.

STANDARDS COORDINATOR	STANDARDS SUPERVISOR	UNIT DIRECTOR

2. Anchor Beam, Normal Profile – Installation Details

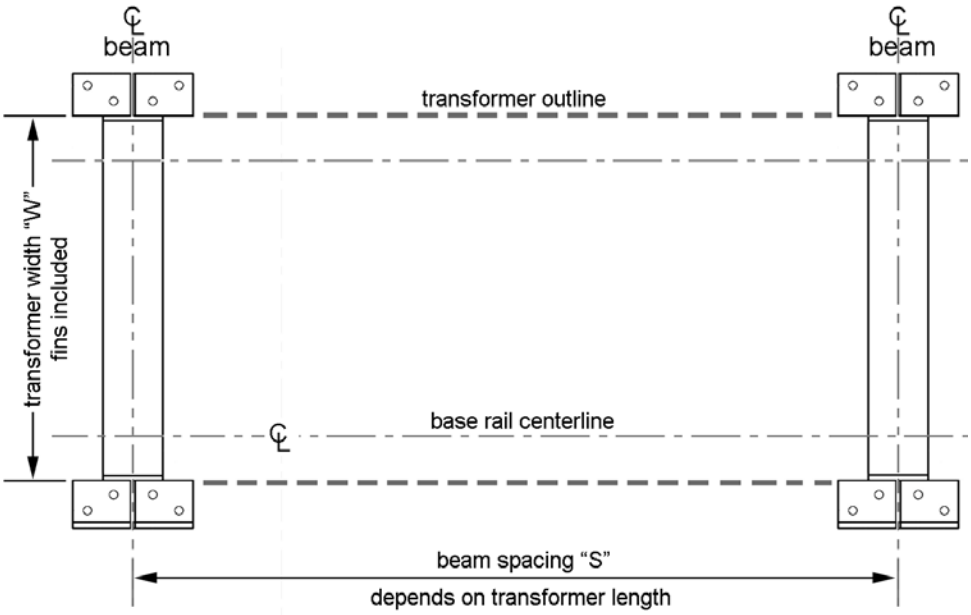

Diagram 2.1, Plan View

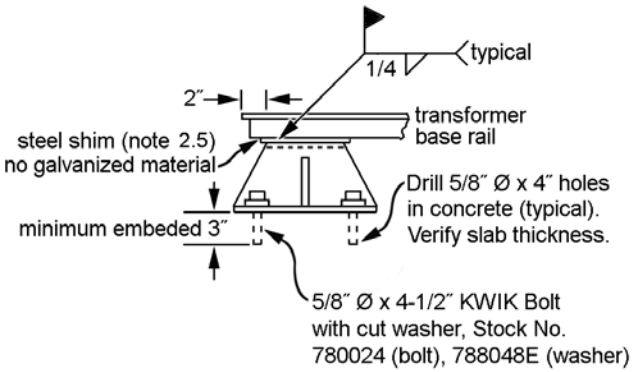

Diagram 2.2, Attachment

Notes

2.1 Locate transformer as shown on vault drawing.

2.2 Locate anchor beams so that the transformer base rails extend 2 inches beyond anchor beam flange on each end.

2.3 Drill four 5/8" ∅ x 4" holes in the floor for each anchor beam.

2.4 Install four 5/8" ∅ x 4-1/2" KWIK bolts for each anchor beam. Beams to be flat on floor. Set KWIK bolt.

2.5 Use 2" x 6" steel shims as required to set transformer rails level end to end and side to side (+ 1/16"). Do not use galvanized material.

2.6 Weld transformer rails to anchor beam on outside edges. Where shims are used, weld rail, shim and beam on outside edge.

2.7 See page 1 for fabrication details.

2.8 Reference drawing, B-3272

2.9 See section 7 for weld specification references.

3. Anchor Beam, Insert Placement

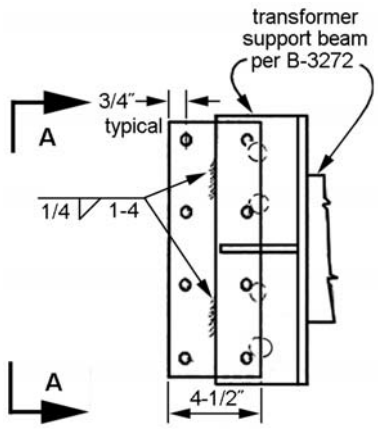

Diagram 3.1, Plan of Welded Anchorage Insert

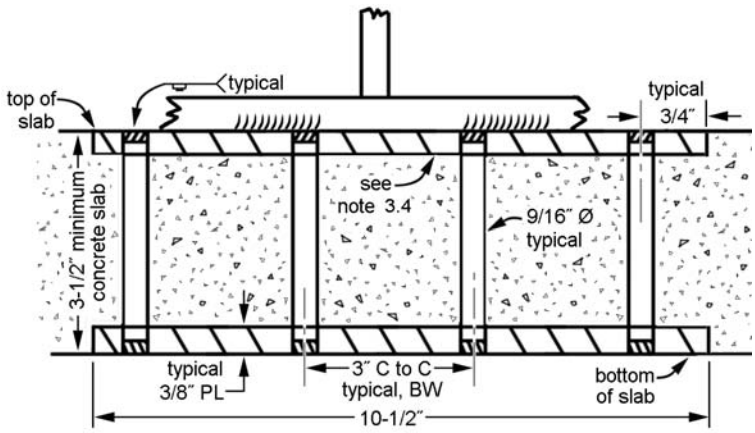

Diagram 3.2, Elevation A-A

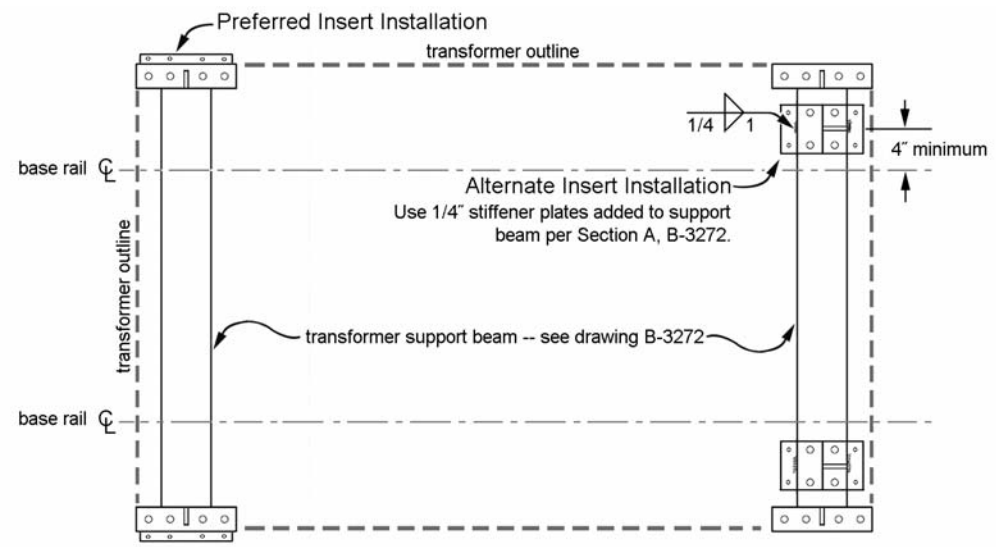

Diagram 3.3, Insert Placement

Notes

3.1 Verify type of slab construction, anchorage and conditions with engineer before installing inserts. Check insert and transformer support beam placement before slab pour.

3.2 Structural steel shall be ASTM A-36.

3.3 Welded insert to receive one shop coat of ATCO "Gilsonite asphalt paint, if conditions dictate. Touch up affected surfaces after welding.

3.4 Float concrete beneath insert plate.

3.5 Insert may be made from this drawing.

3.6 See section 7 for weld specification references.

3.7 Design data: f 'c = 3000 PSI minimum.
Allowable anchor load = 0.25 ultimate load.
33% allowable increase for seismic load.
Seismic design factors:
Fh = 0.48Wt, Fv = (1+ 0.32) Wt,
Wt = Transformer weight.
Shear - tension interaction:

$$\frac{T}{T_A} + \frac{S}{S_A} < 1.0$$

T = applied tension
TA = allowable anchor tension.
S = applied shear
SA = allowable anchor shear.

4. Anchor Beam, Low Profile – Fabrication Details

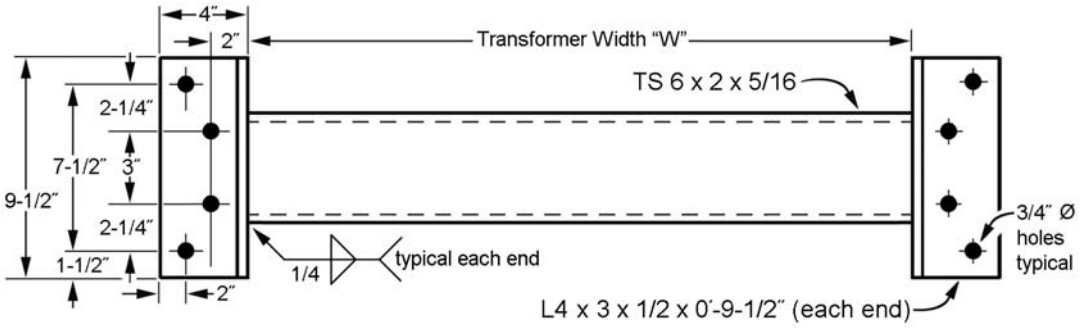

Diagram 4.1, Beam Plan

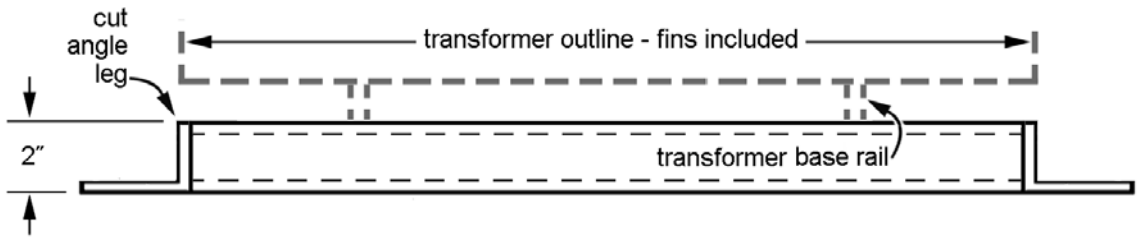

Diagram 4.2, Beam Elevation

Notes

4.1 Angles shall be ASTM A-36.

4.2 Tube section shall be ASTM A500, GR B.

4.3 Paint one coat primer.

4.4 Two anchor beams required per transformer.

4.5 Design data: f 'c = 3000 PSI minimum.
Allowable anchor load = 0.25 ultimate load.
33% allowable increase for seismic load.
Seismic design factors: Fh = 0.48Wt, Fv = (1+ 0.32) Wt,
Wt = Transformer weight.
Shear - tension interaction:

$$\frac{T}{T_A} + \frac{S}{S_A} < 1.0$$

T = applied tension, TA = allowable anchor tension.
S = applied shear, SA = allowable anchor shear.

4.6 See page 5 for installation details.

4.7 See section 7 for weld specification references.

5. Anchor Beam, Low Profile – Installation Details

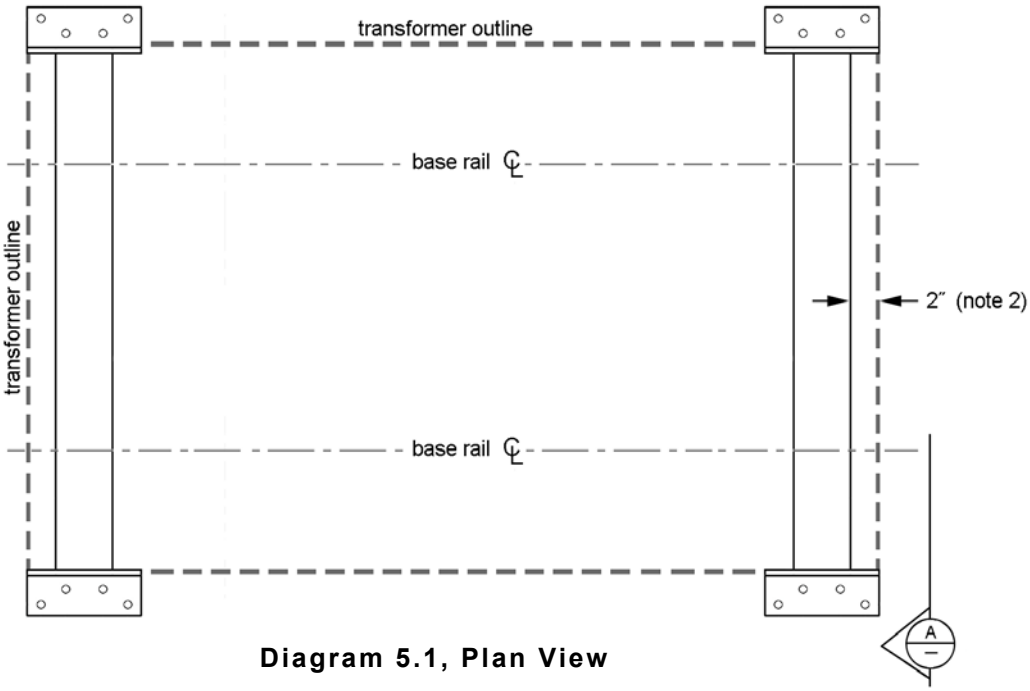

Diagram 5.1, Plan View

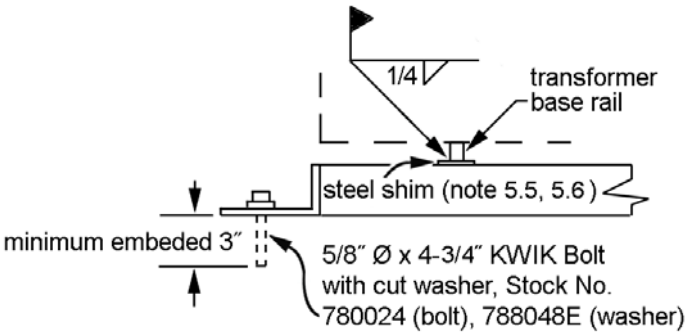

Diagram 5.2, Section A —

Notes

5.1 Locate transformer as shown on vault drawing.

5.2 Locate anchor beam such that the transformer base rails extend 2 inches beyond anchor beam on each end.

5.3 Drill four 5/8” Ø x 4” holes in concrete floor slab for each anchor beam.

5.4 Install four 5/8” Ø x 4 -1/2” - KWIK bolts for each anchor beam. Bolts shall be spaced a minimum of 3” apart.

5.5 Use 2” x 6” steel shims as required to level transformer within ± 1/16”.

5.6 Weld transformer rails to anchor beam on outside edges. Where shims are used, weld shim to anchor beam (weld all around) prior to setting transformer and weld transformer rail to shim.

5.7 Anchor beams are capable of supporting transformers rated to 2000 kVA, max. wt. 24,000 lbs. and maximum dimensions 70” W x 96” H x 145" L.

5.8 See page 4 for fabrication details.

5.9 See section 7 for weld specification references.

6. Anchor Beam, Alternate Insert Placement

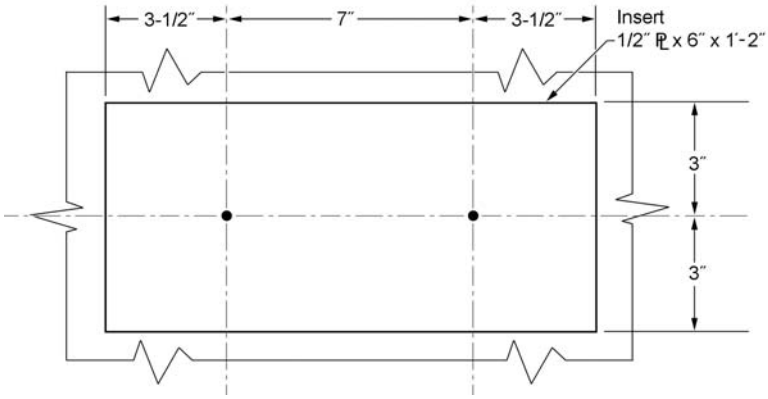

Diagram 6.1, Plan

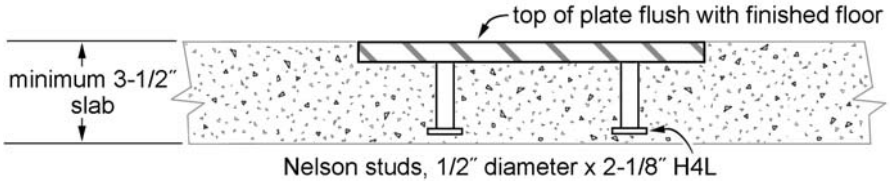

Diagram 6.2, Section

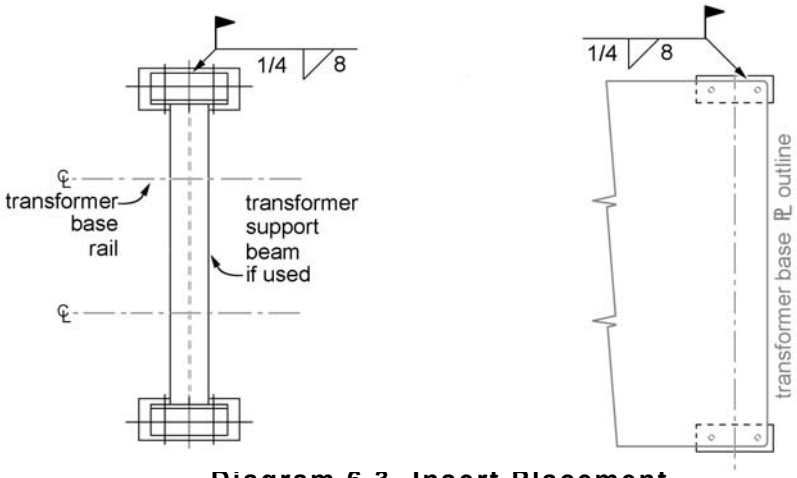

Diagram 6.3, Insert Placement

Notes

6.1 Notify engineer if floor slab is less than 3-1/2 inches thick. Verify location of inserts and transformer before slab pour.

6.2 Structural steel small conforms to ASTM A-36.

6.3 Top surface of insert plate shall receive one shop coat of primer. Touch up where required after welding.

6.4 Design Data: f_c' = 3000 PSI minimum; allowable anchor load = 0.25 breaking load; 33 percent allowable increase for seismic loads; seismic design factors, f_h = 0.48g, f_v = 0.32g

7. Weld Procedure Specifications: SCL-WPS009, SCL-WPS034, and SCL-WPS029

VIBRATION DAMPERS
NETWORK TYPE AND SINGLE PHASE TRANSFORMERS

NETWORK TYPE TRANSFORMERS

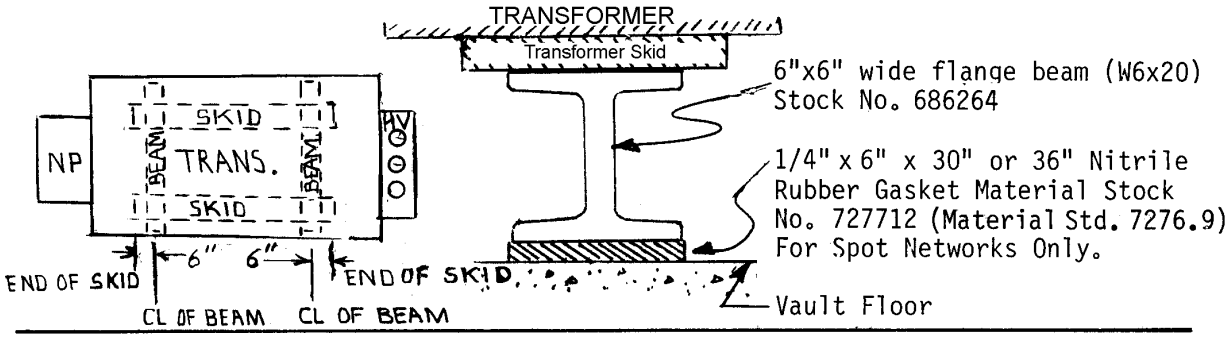

SINGLE PHASE TRANSFORMERS

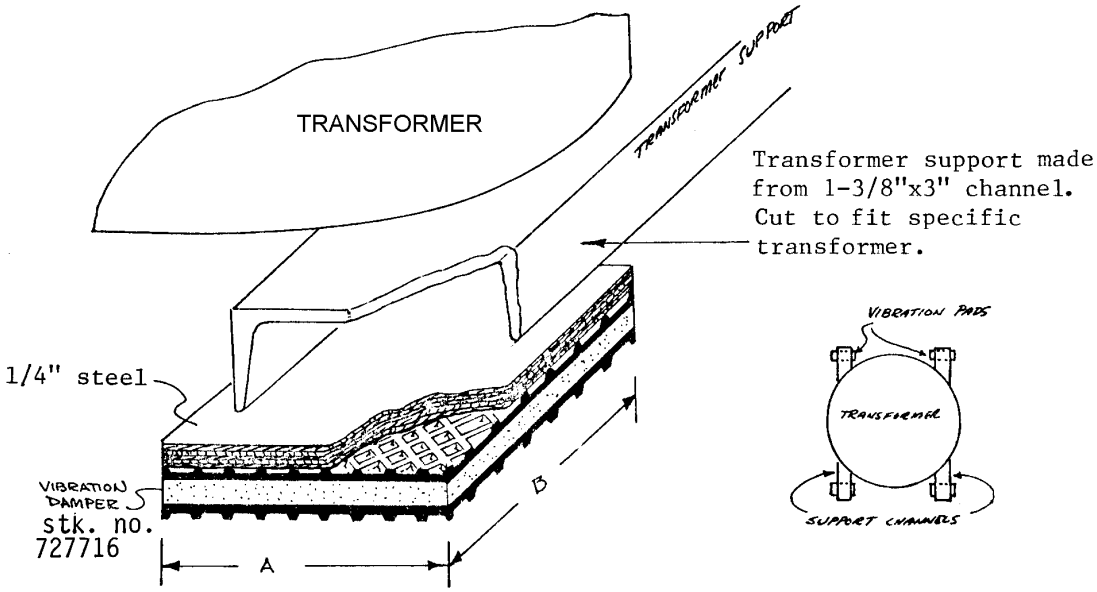

Transformer Weight	Dim. "A"	Dim. "B"
600 to 1000 lbs.	5"	2"
1000 to 1400 lbs.	5"	2-1/2"
1400 to 1800 lbs.	5"	3"
1800 to 2100 lbs.	5"	3-1/2"
2100 to 2400 lbs.	5"	4"

NOTES:
1. Suggested loading 50 to 60 PSI
2. Elasto-Rib Vibration Dampers, maximum loading = 60 PSI.

ORIGINATOR	STANDARDS COORDINATOR	STANDARDS SUPERVISOR	UNIT DIRECTOR
Jim S. Horn	Charles L. Shaffer	John Skinner	Betty Robin

LIGHTING AND SUMP PUMP INSTALLATION FOR SINGLE TRANSFORMER VAULTS

TYPICAL ON GRADE OR IN BUILDING VAULT

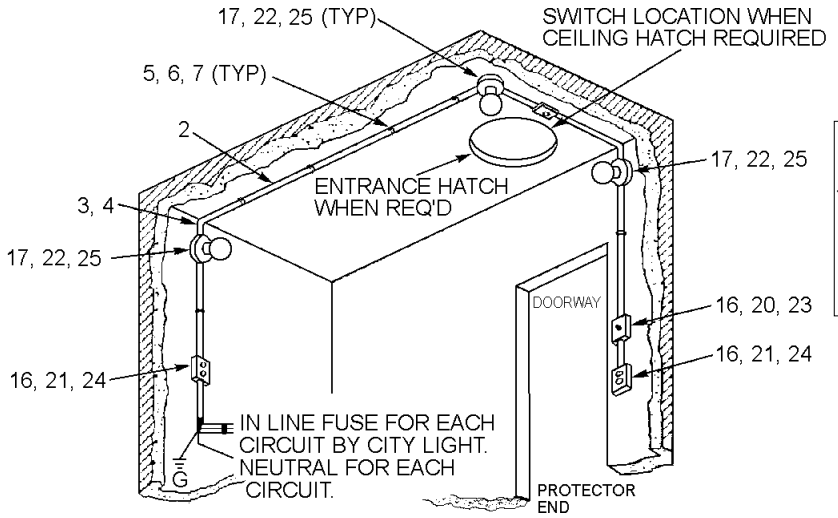

NOTE:
Use separate circuits for lights and for receptacles and for pump if needed.

TYPICAL BELOW GRADE VAULTS - NETWORK VAULTS ONLY

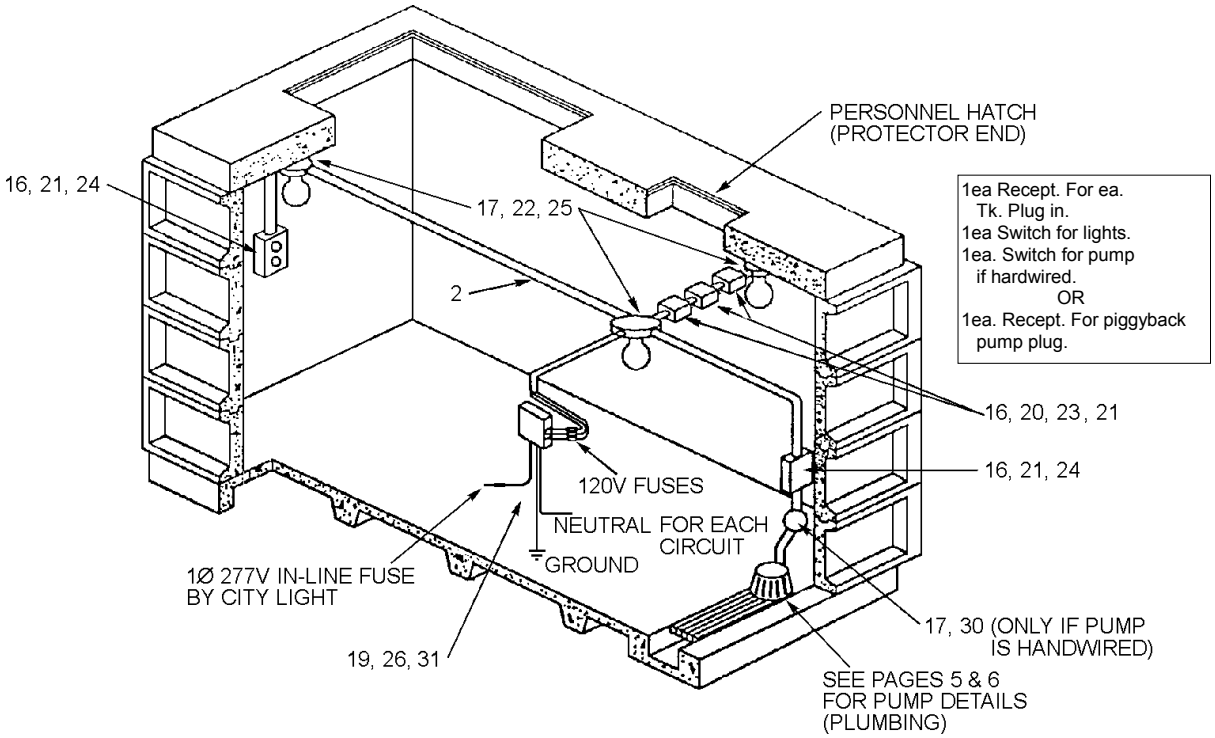

1ea Recept. For ea. Tk. Plug in.
1ea Switch for lights.
1ea. Switch for pump if hardwired.
OR
1ea. Recept. For piggyback pump plug.

ORIGINATOR	STANDARDS COORDINATOR	STANDARDS SUPERVISOR	UNIT DIRECTOR
Jim S. Horn	Charles L. Shaffer	John Skinner	Betty Robin

BILL OF MATERIALS - VAULT LIGHTING

	Quantity							
	Vault with Sump Pump and Lighting				Customer Furnished		Stock	Mat'l.
Item	687	612	814	818 ✣	Vault	Description	No.	Std.
1	See note 1 on page 4				-	TRANSFORMER, 277v - 120v	391285	–
2	20'	30'	35'	50'	20' - 50' -	CONDUIT,PVC, SCH 40, , 1/2" 3/4"	734525 734526	7345.2
3	2	2	2	3	2 -3 -	ELBOW, conduit, PVC, SCH 40, 1/2" 3/4"	734551 734671	7345.2
4	3	4	4	6	4 - 6 -	COUPLING, conduit, PVC, SCH 40, 1/2" 3/4'	734512 734513	7345.2
5	4	5	5	7	4 - 7 -	STRAP, pipe, one hole, 1/2" 3/4"	713442E 713443E	7134.5
6	8	14	16	18	8 - 18	ANCHOR, nail drive, 1/4" x 1"	780010E	–
7	4	6	8	10	4 - 7 -	SPACER, pipe strap, 1/2" 3/4"	713338 713452	7134.6
8	As required				20' - 40'	WIRE, #12, 1/C, THWN, Brown	612221	6122.3
9	As required				20' - 40'	WIRE, #12, 1/C, THWN, Purple	612229	6122.3
10	As required				20' - 45'	WIRE, #12, 1/C, THWN, Orange	612228	6122.3
11	As required				20' - 40'	WIRE, #12, 1/C, THWN, Blue	612225	6122.3
12	As required				20' - 45'	WIRE, #12, 1/C, THWN, Red	612224	6122.3
13	As required				20' - 45'	WIRE, #12, 1/C, THWN, Black	612220	6122.3
14	As required				20' - 40'	WIRE, #12, 1/C, THWN, Green	612226	6122.3
15A	As required				20' - 40'	WIRE, #12, 1/C, THWN, White	612222	6122.3
15B	As required				20' - 40'	WIRE, #12, 1/C, THWN, Gray	612223	6122.3
15C	As required				20' - 40'	WIRE, #12, 1/C, THWN, Gray w/ Tracer	612219	6122.3
16	4	4	4	4	- -	BOX, type FSC, 2" x 4", PVC, SCH 40, 1/2" 3/4"	734567 734571	–
17	3	3	3	4	3 -	BOX, outlet, bakelite, round, 1/2" 3/4"	734569 734572	–
18	5	5	5	5	-	TERMINAL, compression, 12-10, 1/2" stud	677189	–
19	6	6	6	6	-	BOOT, insul., for HEB fuse holder	682360	–
20	2	2	2	2	1	PLATE, wall, nylon, 1 gang / 1 switch	733421	–
21	2	2	2	2	2	PLATE, wall, nylon, 1 gang / duplex	733408	–
22	2	2	2	3	2 - 3	LAMPHOLDER, plastic, for 4" box	733116	–
23	2	2	2	2	1	SWITCH, toggle, flush, 120v - 277v "glow"	733376	7333.0
24	2	2	2	2	2	RECEPTACLE, duplex, parallel, w/ ground	733054	7330.0
25	2	2	2	3	2 -3	LAMP, 125 volt, 300 watt	730630	–
26	3	3	3	3	-	HOLDER, fuse, 600v, type HEB-AA	682346	–
27	1	1	1	1	-	FUSE, current limiting, 600V, 15 amp, KTK, for 0.4 HP pump #739291	683157	–
28	10	10	10	10	10	TWIST LOCK connector, red	677181	–
29	1	1	1	1	-	FUSE, current limiting, 600V, 10 amp, KTK, for 0.33 HP pump #739292	683156	–
30	1	1	1	1	-	COVER, round, bakelite	732214	–
31	1	1	1	1	-	FUSE, current limiting, 600V, 20 amp, KTK for 0.5 HP pump #739290	683158	–
32	1	1	1	1	1	OUTLET, GFCI, with cover	733061	–
33	12	12	12	13	4	ADAPTER, conduit, PVC, 1/2", MIPT x s	734920	7345.2
34	As required				-	ADAPTER, conduit, PVC, male IPS 3/4"	734914	7345.2
35	As required				-	REDUCER, conduit, PVC, 3/4" to 1/2"	734480	–

✣ A network transformer can be installed only in an 818 (8' X 18') or larger vault.

Notes for Single Transformer Vaults

1. All wiring and wiring devices shall comply with the City of Seattle Electrical Code Supplement and/or the NEC.
2. City Light shall supply the power. City Light shall furnish and install fuse holders and make connection to the power source.
3. Minimum vault lighting shall be 3 watts per square foot of vault floor space.
4. Three lamp holders shall be installed so all sides of the transformer are lighted.
5. There shall be two lamps on opposite ends of a vault , 8' x 14' or smaller.
6. Tumbler switches shall be installed near the door at approximately 40 inches above the floor or near the ceiling hatch.
7. Two duplex convenience outlets shall be installed on opposite ends of the vault on the vault walls.
8. Use pigtails on all wiring devices (sockets, outlets, etc.)
9. Install GFCI at the first outlet to protect network personnel.
10. **Disconnecting any neutral circuit with any of the circuits hot could cause the neutral to come hot.**
11. Wiring color codes:

    Three phase source with ground:

CONNECTED TO	COLOR	USE
Phase 1	Black	outlets
Phase 2	Red Orange	lights switched leg
Phase 3	Blue Purple	sump pump pump, manual switch
ground	Green	ground
neutral	White	neutral

    Single phase source:

    Connect all three fuses to 120 volt lead. Use three separate neutral wires (white, gray and gray with tracer) on each circuit.

12. Sump pump vent tube is part of the pump. The connection end of the power cord/vent tube is to point down at the outlet.
13. Use of mercury switches is permitted only if they are installed vertically.
14. Connect neutral and ground wires under SEPARATE connectors at the bus.
15. If the 120 volt power source is from a different vault, use control cable or #4 for long runs. Install network power system ground (250 kcmil Cu.) for personnel ground. Use #4 limiters (Stock No. 683163) for control wire at the source in the new vault.
16. For vaults with more than one transformer, refer to NTP-70 for additional information.

277 to 120 Auto Transformer and 1∅ Lighting Wiring Diagram

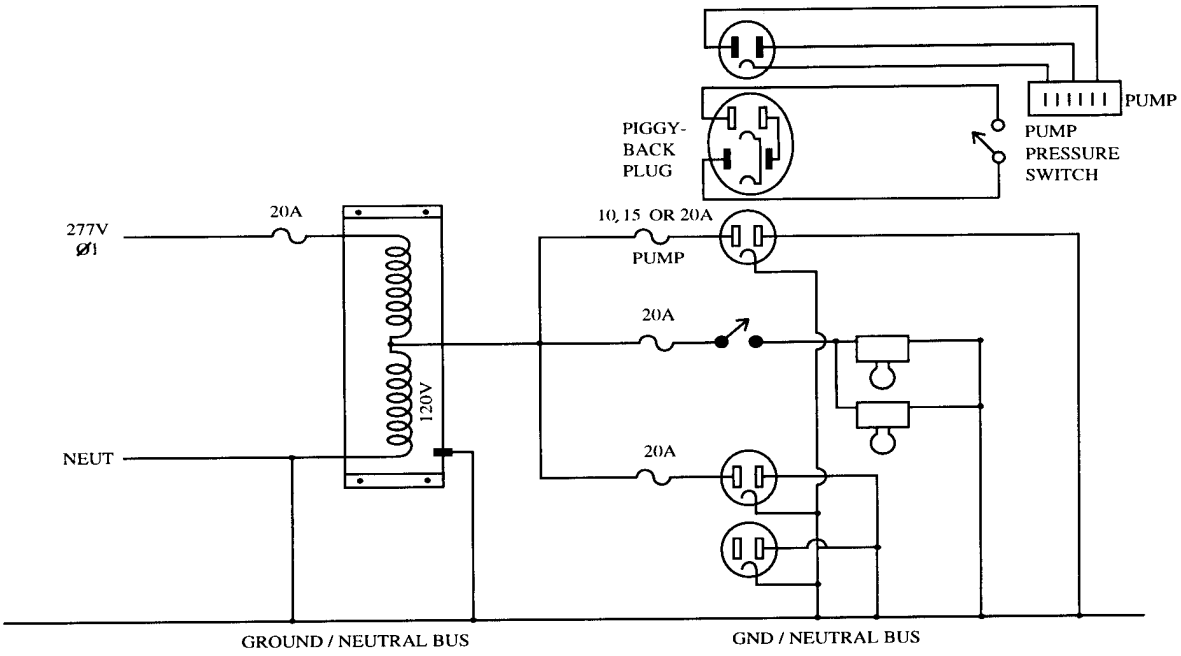

CITY LIGHT VAULT TYPICAL 3∅ WIRING DIAGRAM

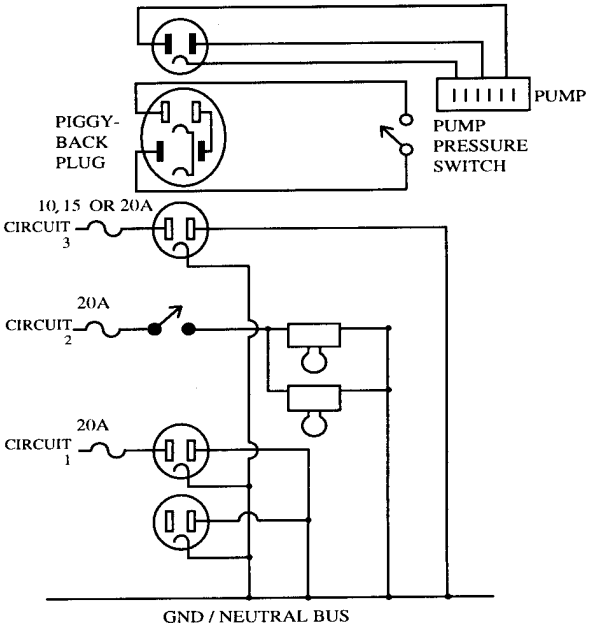

ALTERNATE PUMP HARD WIRE DIAGRAM

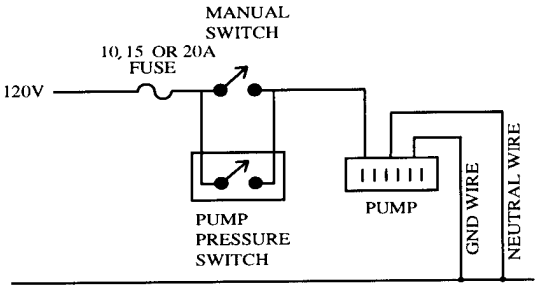

NOTES:

1. Transformer is used only when network voltage in vault is 277/480. Transformer is a dry type outdoor auto-transformer, 277 to 120 volt 60 cycle, 3 kVA, stock No. 391285. Use brown wire on phase 1, 277v to feed auto-transformer.
2. When autotransformer is used, connect all three fuses to 120 volt lead. Use three separate neutral wires (white, gray and gray with tracer) on each circuit. Fuse autotransformer input at 20 amps.
3. Spiral red tape on autotransformer primary neutral wire to ground bus.

2” DISCHARGE SUMP PUMP - PREFERRED INSTALLATION

(New or replacement - if sump opening will allow 2” pump)

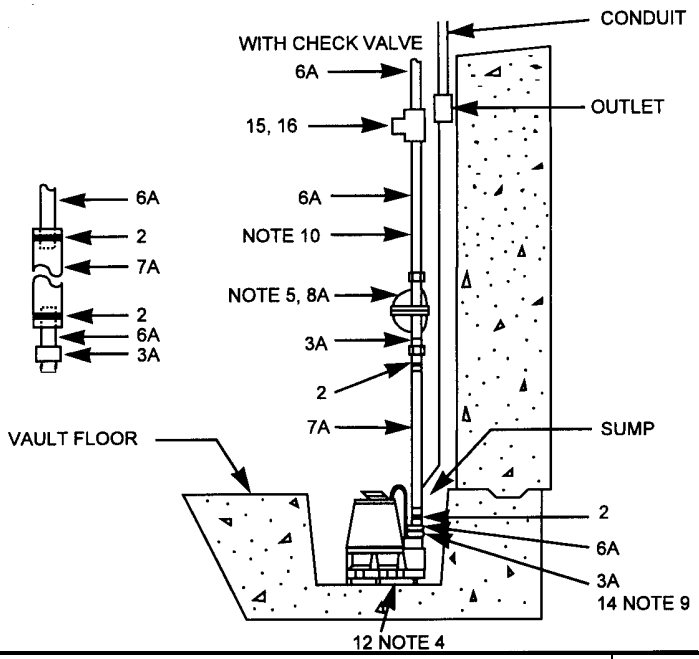

ITEM	QUANTITY	DESCRIPTION	STOCK NO.	MAT’L. STD.
1A	1	PUMP, SUMP, submersible, 1/2 HP, 2” discharge.	739290	7392.8
2	2	CLAMP, hose, stainless steel, 2-1/16” to 3””	739406	-
3A	2	ADAPTER, male, 2” PVC, DWV, MIPT x S	710112	7100.0
4A	as req’d	ELBOW, 90 degree, 2”, PVC, DWV	710116	7100.0
5A	as req’d	ELBOW, 45 degree, 2”, PVC, DWV	710114	7100.0
6A	as req’d	CONDUIT, 2” PVC, SCH 40	734530	7345.2
7A	3 FT	HOSE, vinyl, 2-1/2”	739408	-
8A	1	VALVE, CHECK, 2” PVC S x S	714077	-
9A	as req’d	COUPLING, 2” PVC, SCH 40	734517	7345.2
10A	as req’d	STRAP, pipe, one hole, 2”	713447	7134.5
11A	as req’d	SPACER, pipe strap, 2”	713456	7134.6
12	2	BRICK, concrete, 2” x 4” x 8”	720130	-
13A	as req’d	TEE, sanitary, 2”, PVC, DWV	710110	7100.0
14	1	BUSHING, flush reducer, 2” x 1-1/4”, PVC, S x S	710124	7100.0
15	1	TEE, cleanout, 2” PVC, DWV	710122	7100.0
16	1	PLUG, cleanout, 2”, PVC, DWV	710123	7100.0
17	*1	CONNECTOR, N/M Sheathed Cable *Use if pump is hard wired	731001	-

NOTES:

1. Use 20 ampere fuse (Stock No. 683158) for 1/2 HP 2” discharge pump, Stock No. 739290. If this pump will not fit into sump, see page 6 of this Construction Guideline.
2. New style pump #739290 will have separate cord for pump and for the automatic switch. The automatic switch will be field replaceable.
3. Sump gratings must be cut out for discharge and/or pump as necessary.
4. Place bricks under pump as required to raise to proper level.
5. Install check valve where discharge runs uphill or is longer than 25 feet. Install check valve if sump is small and if it refills from the discharge piping causing pump to recycle.
6. Install vault lighting and sump pumps in network area.
7. Pumps may be hard wired (plugs cut off) as required by installation.
8. If the piggy-back automatic plug is used, the outlet must be a separate circuit and located where it can be reached from the ladder.
9. In vaults with existing 1-1/4” discharge pipe and 2” sump pump, use item 14 and the 1-1/4” material listed on page 6 of this Construction Guideline.
10. Secure discharge pipe to wall with items 10A & 11A for 2” pipe as required.
11. Sump pumps should be placed so that, when they stop pumping on automatic, the floor is pumped clear.

1-1/4" DISCHARGE SUMP PUMP - ALTERNATE INSTALLATION
(For use on sumps with small openings)

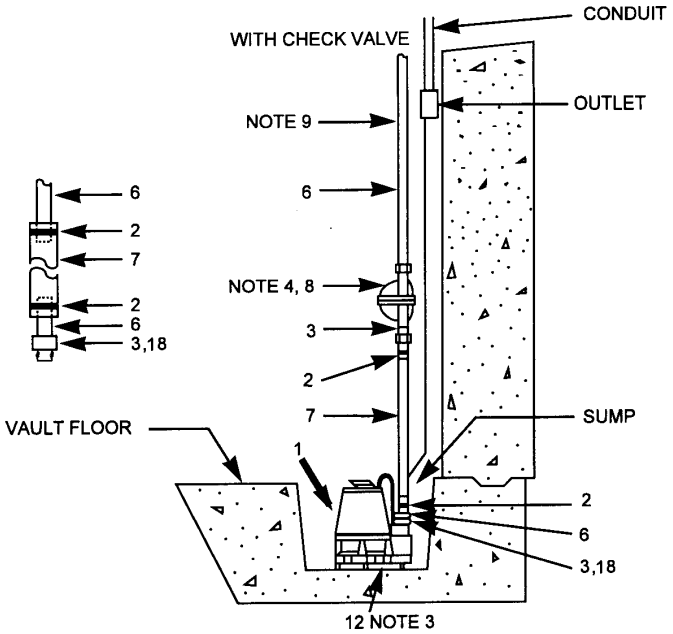

ITEM	QUANTITY	DESCRIPTION	STOCK NO.	MAT'L. STD.
1	1	PUMP, SUMP, submersible, 1/3 HP, 1-1/2" discharge	739292	7392.8
2	2	CLAMP, hose, stainless steel, 2-1/16" to 3"	739406	-
3	2	ADAPTER, male, 1-1/4", PVC, DWV, MIPT x s	710121	7100.0
4	as req'd	ELBOW, 90 degree, 1-1/4" PVC, DWV	710101	7100.0
5	as req'd	ELBOW, 45 degree, 1-1/4", PVC, DWV	710100	7100.0
6	as req'd	CONDUIT, 1-1/4", PVC, SCH 40	734528	7345.2
7	3 FT	HOSE, vinyl, 2"	739407	-
8	1	VALVE, CHECK, 1-1/4" PVC, S x S	714079	-
9	as req'd	COUPLING, 1-1/4" PVC, SCH 40	734515	7345.2
10	as req'd	STRAP, pipe, one hole, 1-1/4"	713445	7134.5
11	as req'd	SPACER, pipe strap, 1-1/4"	713454	7134.6
12	2	BRICK, concrete, 2" x 4" x 8"	720130	-
13	as req'd	TEE, sanitary,1-1/4", PVC, DWV	710118	7100.0
17	*1	CONNECTOR, N/M Sheathed Cable *Use if pump is hard wired	731001	-
18	1	ADAPTER, reducing, 1-1/2" to 1-1/4"	710129	7100.0

NOTES:

1. Use 10 ampere fuse (Stock No. 683156) for 1/3 HP 1-1/2" discharge pump, Stock No. 739292.
2. Sump gratings must be cut out for discharge and/or pump as necessary.
3. Place bricks under pump as required to raise to proper level.
4. Install check valve where discharge runs uphill or is longer than 25 feet. Install check valve if sump is small and if it refills from the discharge piping causing pump to recycle.
5. Install vault lighting and sump pumps in network area.
6. Pumps may be hard wired (plugs cut off) as required by installation.
7. If the piggy-back automatic plug is used, the outlet must be a separate circuit and located where it can be reached from the ladder.
8. Item 17 is used to hold cables in place just outside the junction box.
9. Secure discharge pipe to wall with items 10 & 11 for 1-1/4" pipe as required.
10. Sump pumps should be placed so that, when they stop pumping on automatic, the floor is pumped clear.

REQUIREMENTS FOR TRANSFORMER PADS AND EXTERNAL, BELOW-GRADE TRANSFORMER SERVICE VAULTS, LOOPED RADIAL SYSTEM

1. Scope

This Construction Guideline provides the requirements for Seattle City Light looped radial system's transformer pads and below-grade transformer service vaults. This Construction Guideline does not provide requirements for in-building vaults; please see SCL Construction Standards 0751.00 and 0751.60.

2. Requirements and Codes

All work, including shoring and bracing, shall be in compliance with the latest editions of the State of Washington Department of Labor and Industries Chapter 296-155 WAC "Safety Standards for Construction Work" and the Seattle Department of Transportation "Street and Sidewalk Pavement Openings and Restoration Rules." The below-grade vault location shall conform to the clearances shown in this Guideline. The vault size, ventilation, access, and grounding shall be approved by Seattle City Light. See Figures 9.1a, 9.1b, and 9.2.

3. General Requirements

See project specific construction package for:

- Below-grade vault, if required
- Transformer pad location, if required
- Guard Posts, if required

4. Primary Conduit

The customer shall furnish and install two conduits from the vault floor or wall to a point one conduit length up the utility pole per Construction Guideline U7-10.2. The conduit size and location shall be designated by City Light. Below-grade, the conduits must be separated from each other by a minimum of two inches of concrete.

5. Secondary with Conduit and Cable

The customer shall furnish and install conduit and phase and neutral conductors of sufficient length to connect to the transformer terminals. The conduit location shall be designated by City Light. If more than six conductors per phase and neutral are installed, the customer may be required to provide a suitable tap box or collector bus with compression-type connectors on the bus of the size, type and number designated by City Light.

6. Ground Rods

The customer shall furnish and install four 5/8 inch x 8 feet copperclad steel sectional ground rods in the corners of the vault or pad. The rods shall protrude approximately 6 inches above the finished floor. A driving head shall be used to prevent damage to the ground rod threads. The space between the rods and the floor shall be caulked and grouted to prevent the entrance of water.

Individual, stand alone ground rods shall have a resistance to ground not exceeding 25 ohms. If a single electrode resistance exceeds 25 ohms, a second ground rod shall be driven not less than six feet away and the second ground rod shall be connected in parallel.

In vaults where four parallel-connected ground rods do not achieve 25 ohms, additional grounding is required. Acceptable grounding can be achieved with one additional ground rod driven outside the vault, not less than six feet from all other ground electrodes. This ground rod shall be connected in parallel with the vault grounds with #2 bare stranded copper wire and extended ten feet into the vault for connection by Seattle City Light. The vault penetration shall be sealed against water entry.

Occasionally, due to poor ground conditions on very large transformers, multiple transformer installations, or high fault duties, the customer will be required to install more ground rods as designated by City Light.

If grounding is under concrete or asphalt, all connections shall be done by exothermic welding (Cadweld or better).

7. Below-Grade Transformer Service Vault Requirements

7.1 See Table 7 for minimum vault dimensions.

7.2 Minimum of one 42 inch round hatch with vented cover required.

standards coordinator	standards manager	unit director
John Shipek	John Shipek	Pamela S. Johnson

7. Below-Grade Transformer Vault Requirements, continued

7.3 All conduits shall enter no more than 18 inches from vault corner.

Table 7, Minimum Vault Dimensions

Transformer Bank Maximum Size	Interior Dimensions, ft Width	Length	Minimum Height
150 KVA	7	12	8
225 KVA	7	12	8
500 KVA	8	14	8

7.4 The customer shall furnish and install fire stop insulating material per NEC requirements for service conduits and service bus duct that are installed by the customer in the customer's building or service equipment.

7.5 It shall be the customer's responsibility to assure that water does not enter the building and does not enter service entrance equipment from City Light vaults.

7.6 Sump and Grate shall be located underneath the hatch, next to the nearest wall.

8. Protective Guard Posts (Bollards)

After the transformer has been set on the pad, install 4-inch diameter by 8-foot long rigid steel posts to protect the transformer from vehicles. Insert posts to a depth of 4 feet and fill with concrete.

Locate guard posts a minimum of 4 feet in front of transformer doors so that the doors will open 180 degrees.

Locate guard posts a minimum of 3 feet from the transformer on the other three sides of the pad.

See project specific construction package for:

- Guard post locations from non-door sides of transformer
- Guard post grounding

9. Figures, Clearances of Vaults and Padmounted Enclosures from Buildings

Figure 9.1a, Noncombustible Structures (Structures Designed to Resist Fire for Three Hours), plan view (for combustible structures, see figure 9.2)

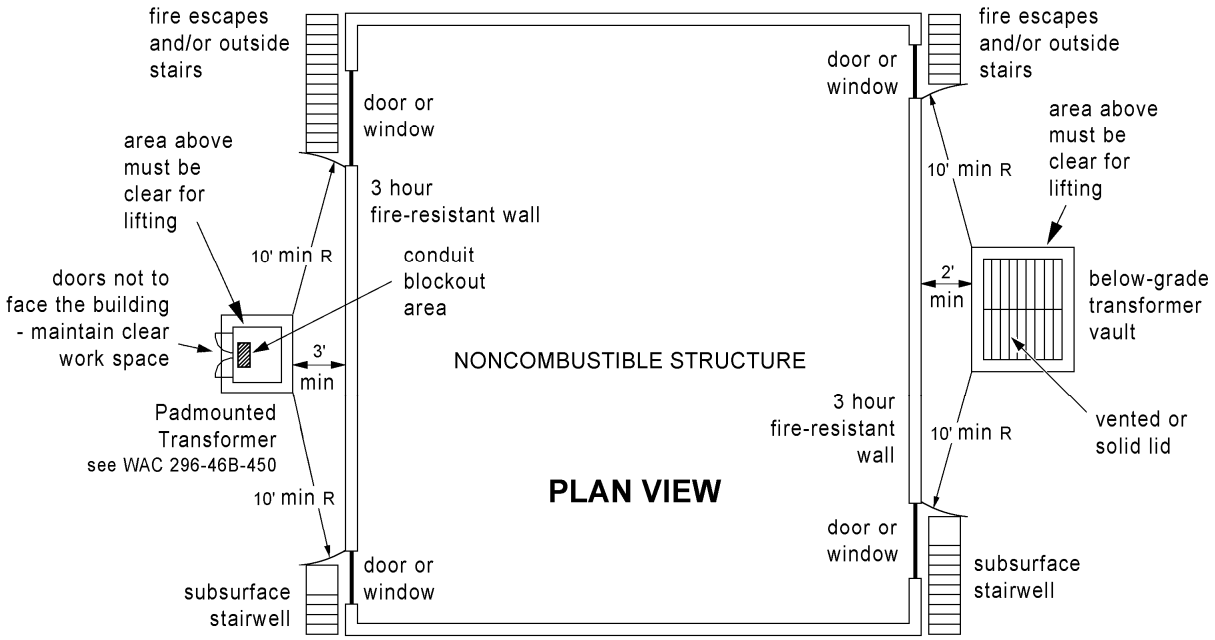

9. Figures, Clearances of Vaults and Padmounted Enclosures from Buildings, continued

Figure 9.1b, Noncombustible Structures (Structures Designed to Resist Fire for Three Hours), elevation view (for combustible structures, see figure 9.2)

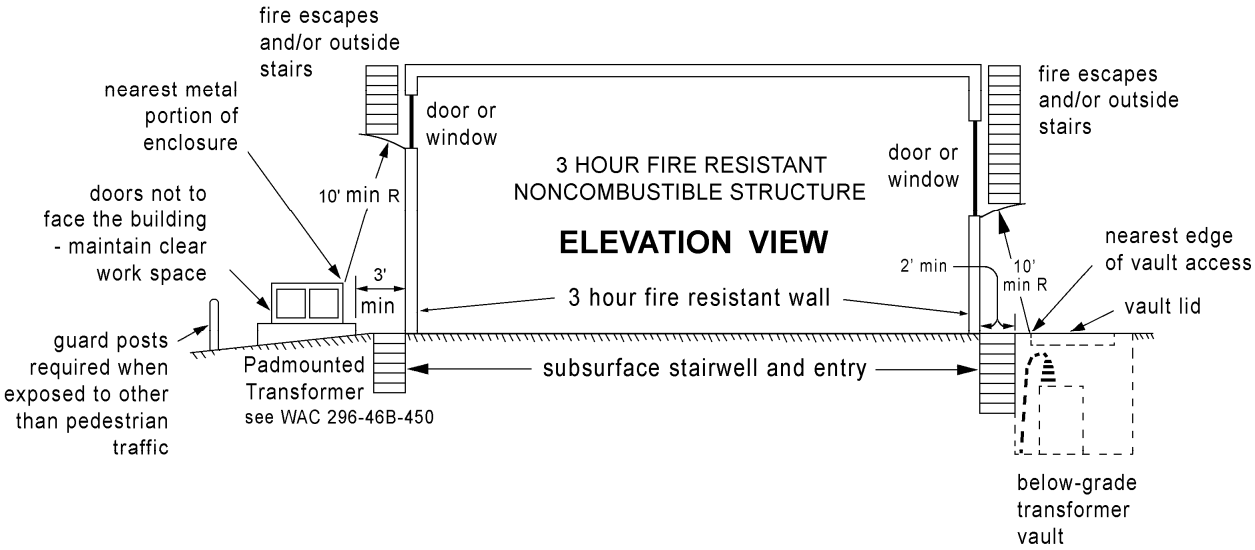

Figure 9.2, Combustible Structures, elevation view

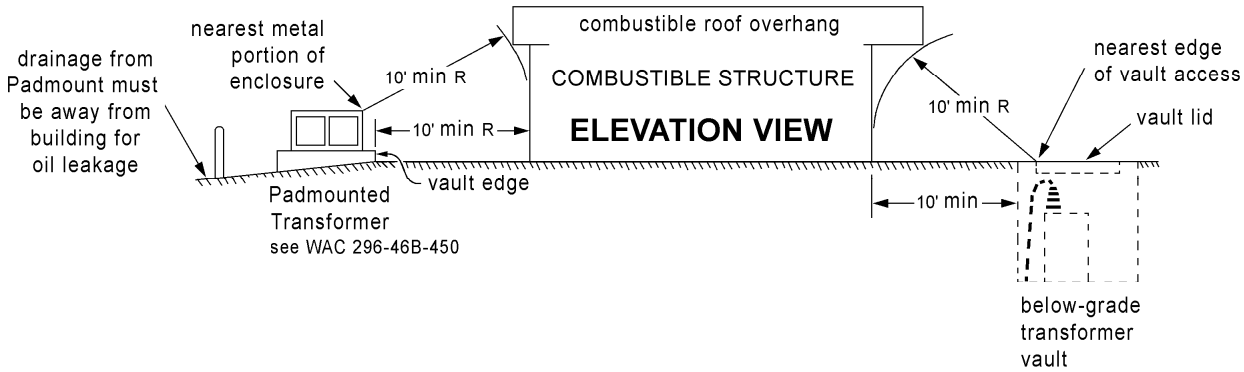

10. References

U10-2 (canceled); "Transformer Service Vaults and Padmounts, Customer's Responsibility, Outside Network Area;" Construction Standard; SCL

Seattle City Light

CONSTRUCTION GUIDELINE

COMMERCIAL SUBWAY TRANSFORMER 750 THROUGH 2500 KVA, STANDARD INSTALLATION

Figure 1 - Transformer Neutral and Ground Connection

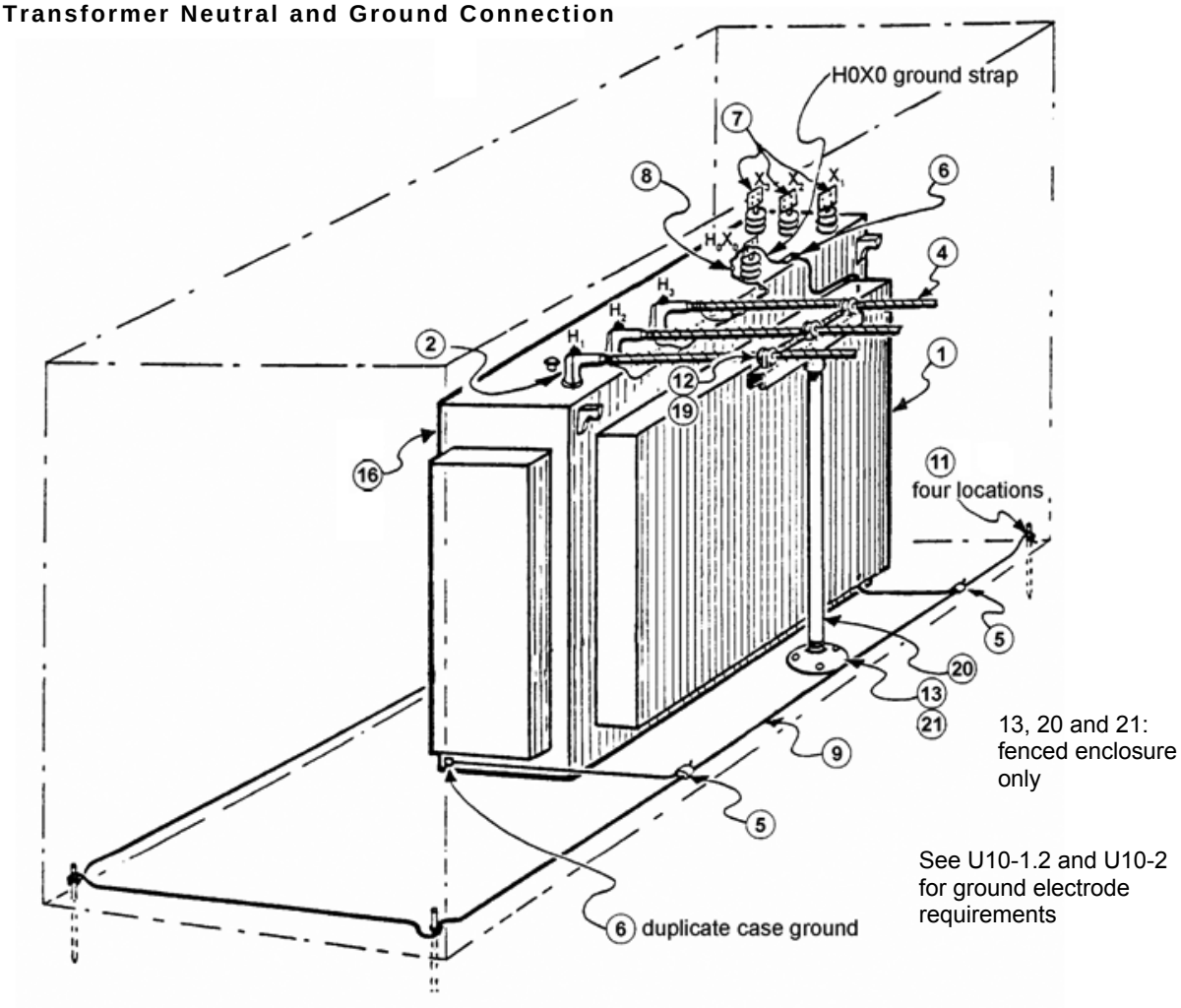

Table 1 - Copper Cable Sizes

208Y/120

KVA	Phase	Neutrals
750	3/750	2/750
1000	4/750	3/500
1500	–	–
2000	–	–
2500	–	–

480Y/277

KVA	Phase	Neutrals
750	2/500	500
1000	2/750	750
1500	3/500	2/500
2000	3/750	2/750
2500	4/750	3/750

Reference: U1-4.51, Transformer Secondary Lead Sizes for Underground Installations.

standards coordinator	standards supervisor	unit director
Chris Detter	John Shipek	Pamela S. Johnson

Figure 2 – Plan View, Transformer, Typical

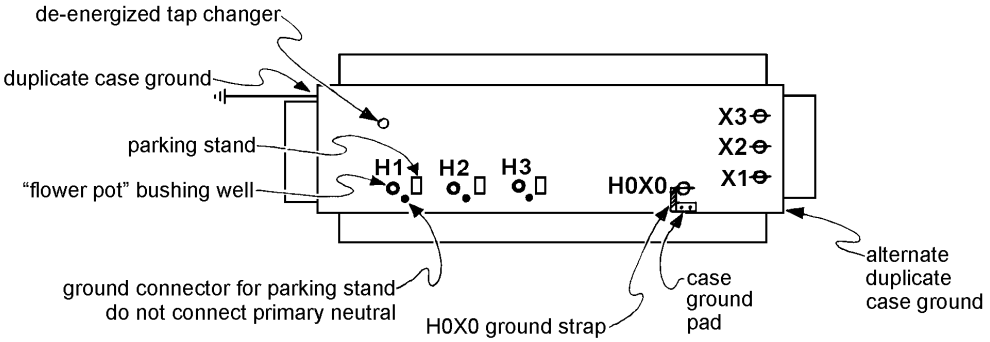

Figure 3 – Transformer Schematic, 480Y/277 or 208Y/120 Volts, Primary Taps Not Shown

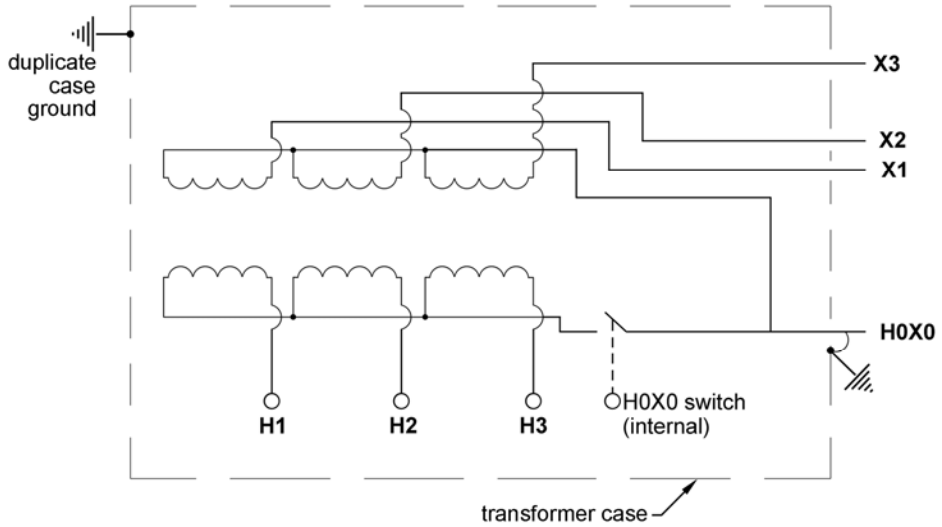

25,700 volts is a normal tap unless stated on Work Order

Notes:

1. Install transformer on pad or in vault.
2. Connect grounds including duplicate case ground.
3. Install cable support bracket when required. Primary cables are to be supported in a manner such that at least 12 of cable will remain in the same plane as the cable barrel of the Deadbreak Elbow. Twist together the primary neutrals, leaving sufficient slack to remove elbows, and connect to H_0X_0 bushing with 4/0 compression terminal (677081E)
4. Connect secondaries; see Table 1.
5. Install primary elbow connectors.
6. See Construction Guideline U10-2 for customer's responsibility.
7. See Construction Guideline U10-6 for vault lighting and receptacle when required.
8. See Construction Guideline U10-2.1 for in-building vault requirements.
9. See Construction Guideline U10-1.2 for fenced enclosure requirements.

Notes, continued:

10. See Construction Guideline U10-5.3/NTP-40 for seismic anchoring.

11. See Construction Guideline U12-3 for allowable service connections.

12. Apply “Danger High Voltage” and “Call Before You Dig” labels at eye level on transformer if above grade.

13. City Light will:

- Install a fiberglass "Danger High Voltage” sign on the pad fence.
- Apply the appropriate PCB labels on the transformer (See Item 16 in Table 2, below.)
- Install "Call Before You Dig” labels to two SCL Stock No. 765181 fiberglass "Danger High Voltage” signs. These two overlaid signs on the fence will be installed so as to be seen by approaching fire fighters.
- Tie wraps shall be used to attach hanging signs.

Table 2 - Material List

Item	Quantity	Description	Stock Number
1	1	TRANSFORMER, commercial subway, kVA size as required	as required
2	3	ELBOW, deadbreak, 15.2 kV L-G	686416
4	as required	CABLE, 1/0 Solid, Al, concentric neutral, 28 kV	602025
5	2	CONNECTOR, crimpet, 2/0-4/0 to 2/0-1/0	677331E
6	2	CONNECTOR, cable to flat, 2/0 solid to 250	676675
7	as required	CONNECTOR, cable to flat	
		500 kcmil Cu	677091E
		600 kcmil Cu	677096
		750 kcmil Cu	677100
		1000 kcmil Cu	677110
8	2	TERMINAL, compression lug, 4/0	677081E
9	50 ft	WIRE, 2/0, bare Cu, soft drawn	610425
11	4	CLAMP, cable to Rod, 5/8 to #4 Sol. - 2/0	676254
12	1	BRACKET, cable support for 28 kV, 1/0 solid, 2/C, bare	012466
13	4	ANCHOR, masonry, 3/8 -16 x 2-1/4	780103E
14	1	SIGN, "Danger High Voltage"	765182
15	3	SIGN, "Danger High Voltage", fiberglass	765181
16	2	PCB LABEL, for energized transformers. Choose the label that indicates the PCB level of the transformer coolant:	
		PCB content 500 ppm or greater, black on yellow	765201
		PCB content 50 to 499 ppm, black on white	765208
		PCB content 1 to 49 ppm, white on blue	765206
		PCB content less than 1 ppm, white on light green	765211
17	2	LABEL, "Call Before You Dig"	765255E
18	12	TIE, cable, black, 7	735805E
19	3	CABLE, support, thermoplastic, 28 kV, 1/0 solid, 2/C, bare	011961
20	as required	PIPE, galvanized, steel, 2	710369
21	1	FLANGE, floor, for galvanized steel pipe, 2	712109

TRANSFORMER AND NETWORK PROTECTOR SECONDARY BOLTING AND TAPING

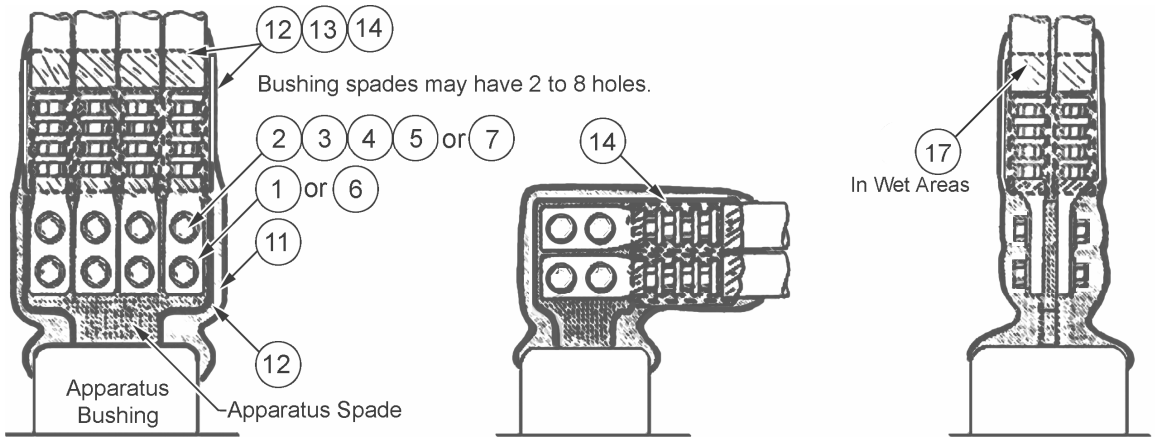

Front View for Network Protectors / Side View Transformer

Alternate Side View for Transformers

Side View for Network Protectors / End View for Transformers

Notes:

1. **Train the conductors** into the final locations, cut to length and install lugs. Be sure to use the correct size lugs and compression tool.
2. **On all joints** the mating surfaces must conform to each other. The shapes must be brought to flat with the use of a file to remove any burrs, deformations, irregularities or weld spatter.
3. **For copper to copper joints:** Use silicon-bronze bolts, nuts washers and lock washers (items 2 thru 6). Refer to Construction Guideline D14-4/NSV-20 and DU5-1/NSV-30.
4. **For copper to aluminum joints:** Use aluminum kits Stock No. 782050, 782051, and 782052. Refer to Material Standard 7820.0.
5. **For aluminum to aluminum joints:** Use aluminum kits Stock No. 782050, 782051, and 782052. Refer to Material Standard 7820.0.
6. **Taping in rain or drip:** Use item 17, network protector breakout boot, if available. The 5 steps which follow can be used if the boot is not available.
   - 6a. Thoroughly clean the surface over which the tapes are to be applied. Heat shrinks (6″) should be applied over connector barrel, heat shrinking until glue flows.
   - 6b. Apply one half lapped layer of plastic electrical tape, adhesive side exposed over all metallic parts (spade, terminal, exposed bare conductor). Do not apply over porcelain or epoxy portions of the bushing, nor over the heat shrinks.
   - 6c. Mold insulation and waterproofing compound around adhesive exposed tape, and over cable and bushing one inch to make a smooth surface for plastic taping and water sealing.
   - 6d. Apply two half-lap layers of plastic tape to cover the entire bolted connection and a portion of the bushing and the heat shrink as shown.
   - 6e. Cover plastic tape with friction tape and paint with insulating varnish.

STANDARDS COORDINATOR	STANDARDS SUPERVISOR	UNIT DIRECTOR
Rick Rice	John Barnett	Richard Kent

7. **Taping in dry vaults or out of the rain or drip:** Apply three layers of the varnish cambric over exposed conductor and overlapping bushing and cable insulation at least one inch. Pull down with 3/4″ plastic to conform then cover with friction tape (3/4″ and 2″ as necessary) one-half lapped. Paint with insulating varnish.

8. **Network Protector Grounding:** Bond the network protector grounding boss to the network transformer grounding boss using the wire sizes in NTP-80.

Material List: Quantities of items to be determined by the engineer and/or the installer.

Item	Description			Matl. Std.	Stock No.
1	TERMINAL, copper compression, use 1/2″ diameter bolts		2/0	6770.70	677077E
			3/0	6770.70	677079E
			4/0	6770.70	677081E
			250 kcmil	6770.70	677083E
			300 kcmil	6770.70	677085E
			350 kcmil	6770.70	677087E
			500 kcmil	6770.70	677091E
			600 kcmil	6770.70	677096
			750 kcmil	6770.70	677100
			1000 kcmil	6770.70	677110
2	CAP SCREW, silicon bronze, reg. hex. 1/2″ x 1-1/2″ NC			7845.1	784587E
3	NUT, silicon bronze reg. hex. 1/2″			7833.3	783325E
4	WASHER, flat, silicon bronze 1/2″			7880.2	788026E
5	WASHER, split lock, silicon bronze 1/2″			7880.2	788125E
6	TERMINAL, aluminum compression	2/0		6774.9	651257
		3/0		6774.9	651258
		4/0		6774.9	651265
		350 kcmil		6774.8	651268
		500 kcmil		6774.8	651270
		750 kcmil		6774.8	651272
		750 kcmil compressed		6774.8	651275*
7	ALUMINUM ASSEMBLY KITS: belleville washer, aluminum bolt, spring washer assembly		1-3/4″	7820.0	782050
			2-1/2″	7820.0	782051
			3-1/4″	7820.0	782052
8	VARNISHED CAMBRIC			–	735283E
9	TAPE, friction, 2″			7364.0	736415
11	TAPE, insulating and waterproofing “Aqua Seal”			7364.70	736470E
12	TAPE, electrical, low temperature			7366.5	736655E
13	TAPE, friction, 3/4″			7364.0	736400E
14	HEAT SHRINK TUBING			7374.5	737450E-604
15	OXIDE INHIBITING COMPOUND NO-OX-ID “A”			–	725696
16	VARNISH, insulating, clear, quart			–	725471
17	CABLE BOOT, network protector breakout, 4 legs			7374.5	012479

* For use with Excelloy 750 kcmil Al compressed round

BUS EXTENSIONS and CABLE TAP BOXES

1. BUS TAP INSTALLATIONS

The Bus Extensions with Service Tap is also referred to as the Bus Duct with Service Tap Bus Extensions installed outdoors shall be rain tight. The roof shall shed water and the base shall be drip tight. All equipment shall conform to all applicable requirements of UL and NEC.

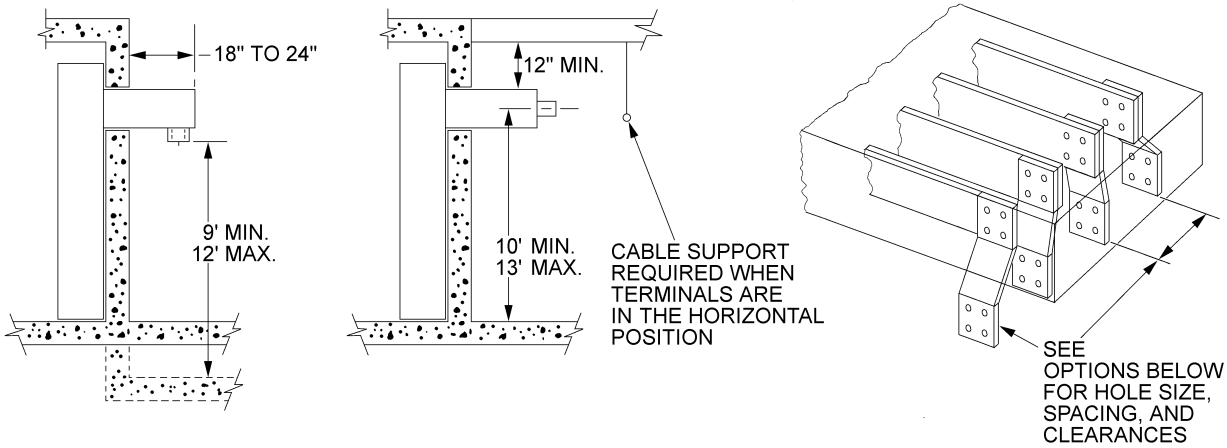

OPTION 1

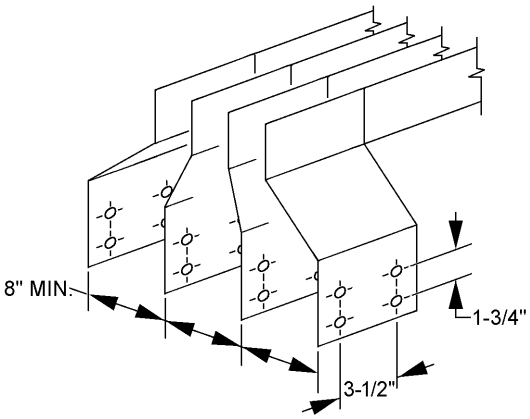

(a) 9/16" holes in copper bus.
(b) 11/16" holes in aluminum bus.

OPTION 2

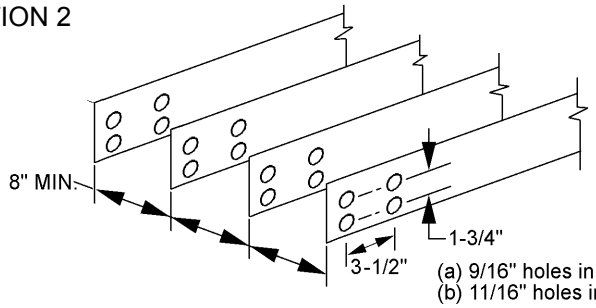

(a) 9/16" holes in copper bus.
(b) 11/16" holes in aluminum bus.

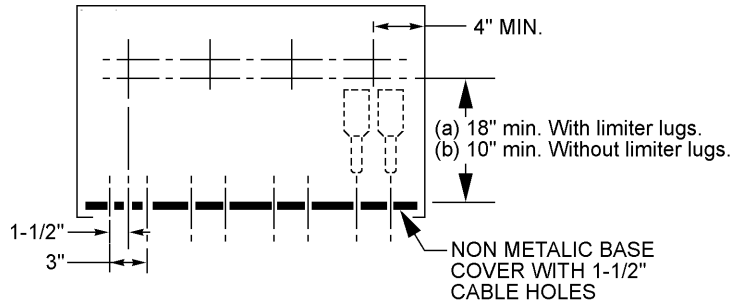

ORIGINATOR	STANDARDS COORDINATOR	STANDARDS SUPERVISOR	UNIT DIRECTOR
Jim S. Horn	Charles L. Shaffer	John Schimmer	Betty Robin

2. CABLE TAP INSTALLATIONS

The Cable Tap Bus Interface is also referred to as the Cable Tap Box or Collection Bus. Bus Interface installed outdoors shall be rain tight. The roof shall shed water and the base shall be drip tight. All equipment shall conform to the applicable requirements of UL and NEC. All support brackets, mounting brackets or hanger brackets shall be designed for the particular application.

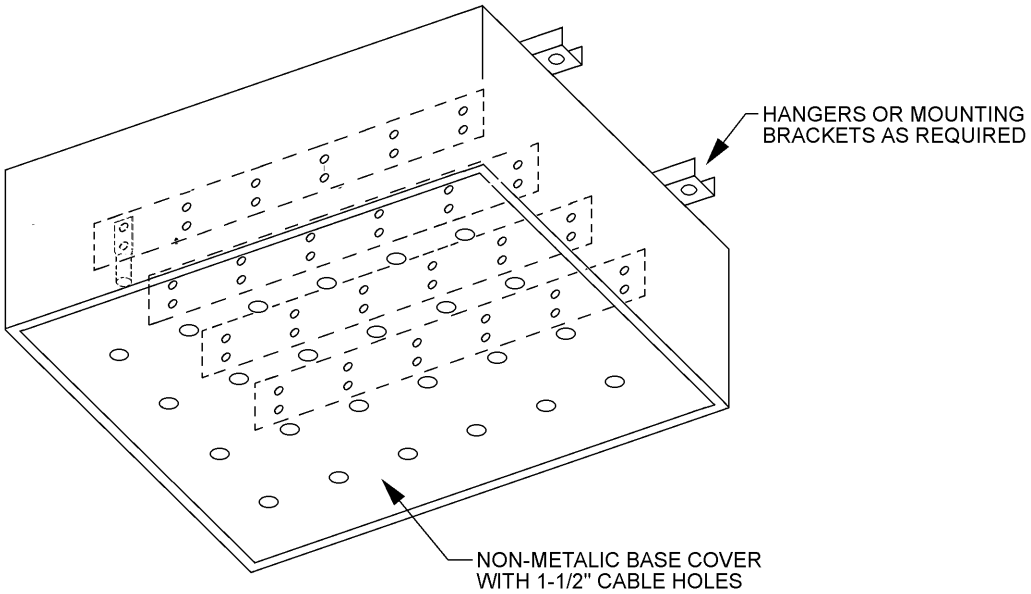

See option 2 for bolt size and spacing, bus bar spacing and clearance requirements.

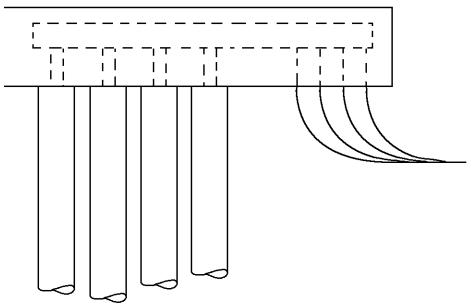

Tap box mounted on conduit.

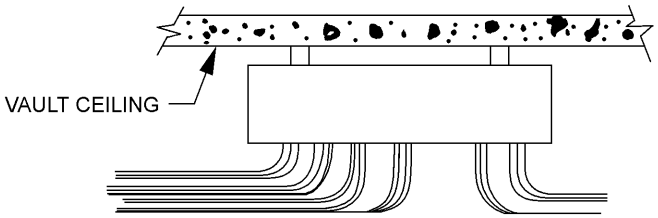

Tap box mounted on ceiling. For vault installations, the enclosure shall be hot dip galvanized steel. This installation is NOT acceptable for submersible or below ground installations.

METER LOCATION AND CONDUIT ENTRANCE DETAILS FOR SECONDARY UNDERGROUND RESIDENTIAL SERVICE, CLASS 320 MAXIMUM

1. **Scope:** This Guideline provides installation details for residential metering equipment that does not require current transformers. These requirements are not typically applied to temporary services.
2. **Underground service conductors** shall be in either Schedule 40 PVC conduit or galvanized rigid steel conduit as shown in the illustrations below. Direct buried conductors are not allowed. All Steel conduit and steel elbows shall be completely buried or concrete encased.
3. All **horizontal bends** shall be rigid steel.
4. The conduit bend under the meter base may be PVC Schedule 40 if the SCL Electric Service Representative determines that the SCL service lateral conductor will be fed *from* under the meter base, otherwise the bend shall be rigid galvanized steel.
5. See U7-10/NDK-70 and U7-10.1/NDK-80 for **pole riser** requirements.
6. **Manual bypass meter sockets** are encouraged but not required. If a manual bypass is installed, the bypass section shall be accessible to City Light.
7. **320 class meter sockets** may be used for services over 200 amperes and up to and including 400 amperes.
8. **Approved meter sockets** shall be installed on all residences in an accessible location either on an outside wall or on a free-standing pedestal, in accordance with the City Light publication *Requirements for Electrical Service Connection*.
9. For aid in determining the **proper type of meter socket and location**, contact your City Light Customer Service Representative at (206) 615-0600 north of Denny Way and (206) 386-4200 south of Denny Way.

Figure 1, Wall Mount

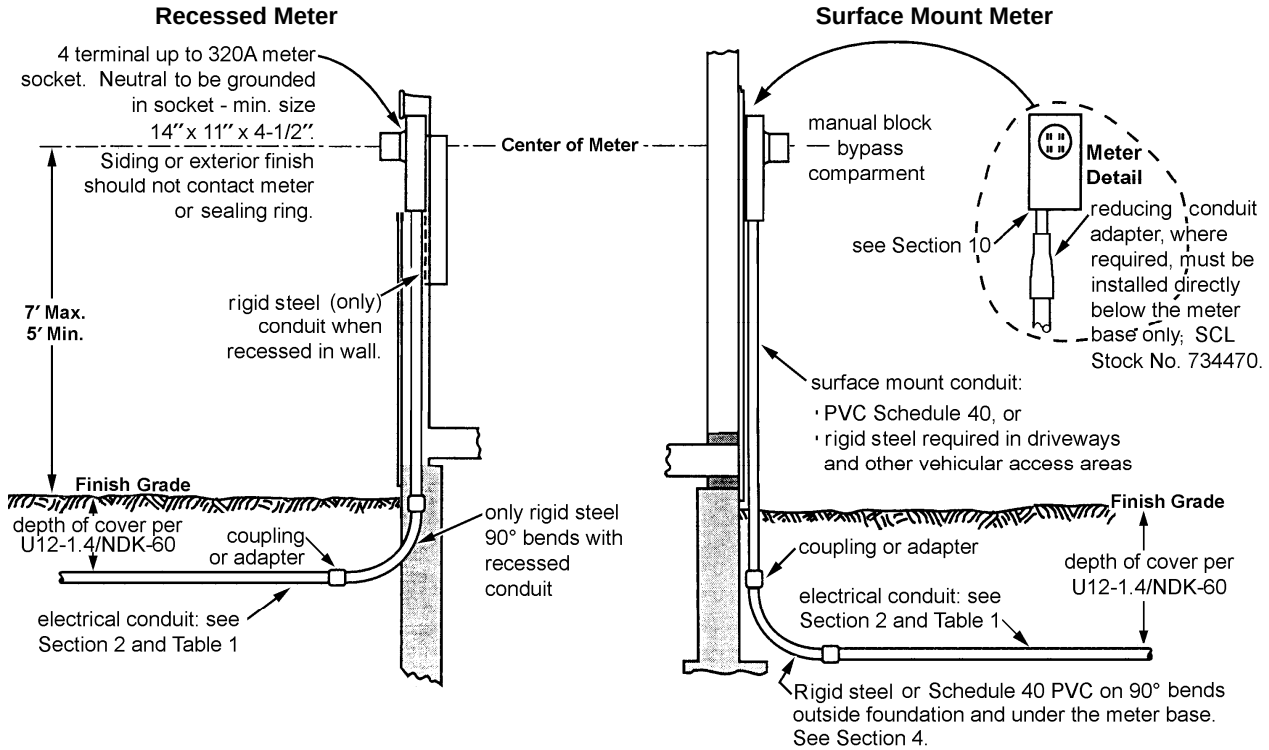

standards coordinator	standards supervisor	unit director
Chris Detter	John Shipek	Pamela S. Johnson

10. The **supply (line side) conductors** to the meter socket shall be connected to the top terminals, and the load conductors shall be connected to the bottom terminals. For 200 A class sockets, the supply (line side) conduit shall enter through the right or left knockout of the bottom of the meter socket. Load side wires shall enter through the side opposite to the line side and shall not block the path of line side conductors. For 320 A class sockets, the supply conduit may enter any knockout on the bottom of the meter socket.

11. The customer is responsible for ensuring against **entry of water** into buildings, into or through service equipment, or other locations where the entry of water could be considered a problem. See the Seattle City Light *Requirements for Electrical Service Connection* manual for details.

12. SCL Material Specifications

Conduit and Fittings	**Material Standard**
PVC Schedule 40	7015.05
zinc-coated steel	7050.05

13. Conduit Requirements: Conduit size shall be selected according to Table 13. Requirements are based on meeting *both* Condition #1 and Condition #2.

Table 13

Condition #1	Condition #2	Requirement
Conduit Run Length, ft	Number of Conduit Bends	Conduit Size, in
less than 150	less than 3	2-1/2 or 3
150 - 200	3	3
greater than 200	greater than 3	see note 13.3

Table 13 Notes:

13.1 All 3-inch conduit shall have 36-inch radius bends.

13.2 All 2-1/2-inch conduit shall have 24-inch radius bends.

13.3 Add pulling handhole to reduce length of conduit run to 200 feet or less, or reduce the number of conduit bends to three or less.

Figure 2, 200 A Single Phase Pedestal Mount

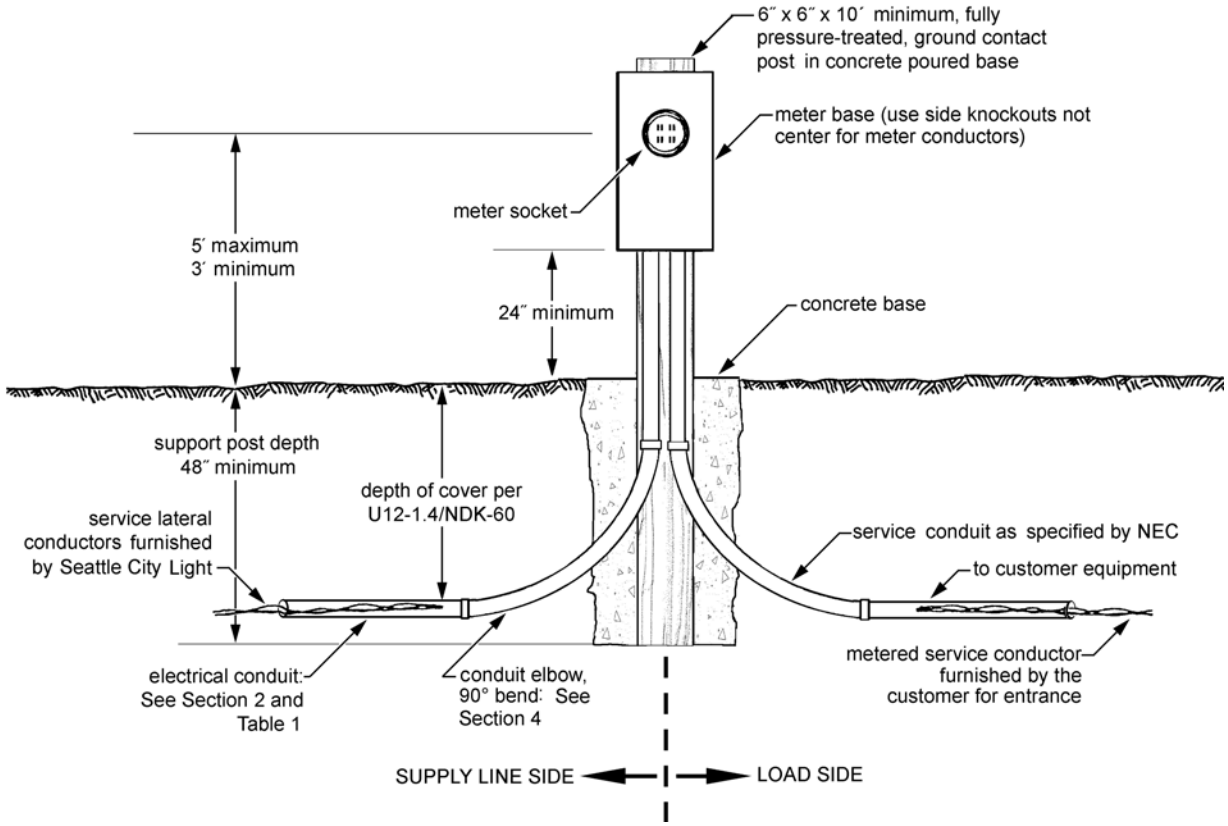

Figure 3, 320 A Single Phase Pedestal Mount

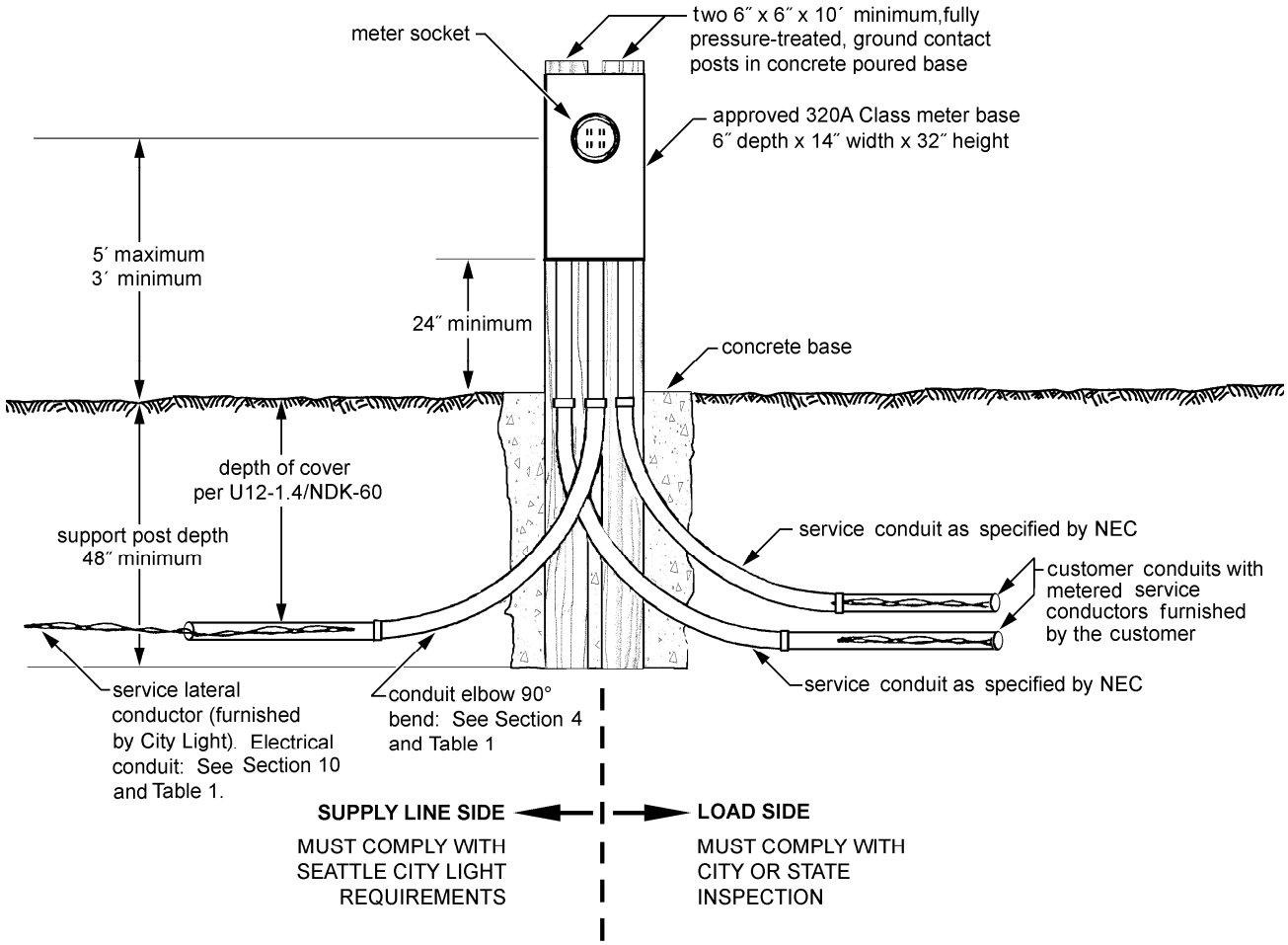

14. References:

7015.05, “Schedule 40 PVC Conduit and Fittings”; *Material Standard*; SCL

7050.05, “Zinc-Coated Steel Conduit and Fittings”; *Material Standard*; SCL

Detter, Chris; SCL Standards Engineer, subject matter expert and originator of U12-1.3/NMT-10 (chris.detter@seattle.gov)

“EUSERC Drawing 300”; Electric Utility Service Equipment Requirements Committee (EUSERC); 2007

Requirements for Electrical Service Connection; SCL; January 26, 2007

U7-10/NDK-70, “Conduit Risers on Poles”; *Construction Guideline*; SCL

U7-10.1/NDK-80, Conduit Riser – 600 Volts Pole Base Detail”; *Construction Guideline*; SCL

U12-1.4/NDK-60, “Installation Details for Underground Services Nonmetalic and Rigid Steel Conduit on Private Property”; *Construction Guideline*; SCL

U12-5/NMT-20, “Meter Socket Connections and Conductor Identification, 200 Ampere Maximum”; *Construction Guideline*; SCL

INSTALLATION DETAILS FOR UNDERGROUND SERVICES NONMETALLIC AND RIGID STEEL CONDUIT ON PRIVATE PROPERTY

A. General

1. No definite separation is required between power, telephone and CATV cables although 8” to 12” is advisable.
2. All direct burial cables*, nonmetallic and rigid steel conduit for lateral service to private property from the distribution trench shall be 36” minimum below final grade in the public right-of-way. All rules for material types, trench finish and backfill shall be as noted below.
3. The bottom of the trench shall be free of debris and fine graded by hand to remove sharp embedded rocks and loose stones over 1/2”, or the trench shall be over-excavated and the over-excavation replaced with bedding material to cover protruding rocks and stones by at least 2”. The bottom shall be graded even. Bedding shall be sand. Over conduit, place bedding material or a 2” layer of unsaturated excavated material selected to exclude all sharp rocks and stones over 1/2” size. Around all telephone and television cables, place bedding material or select excavation material. Backfill conforming to this may be placed directly over conduit and all cables.
4. The customer is responsible for ensuring against entry of water into buildings, into or through service equipment, or other locations where entry of water could be considered a problem. See the Seattle City Light “Requirements for Electrical Service Connection” manual for details.

B. Nonmetallic Conduit on Private Property

1. Minimum depth shall be 18” over nonmetallic conduit. (36” for high voltage conduit — above 600 volts)
2. Conduit shall be PVC schedule 40 or other nonmetallic conduit approved for direct burial.
3. Bending of PVC conduit with heat (e.g., heat blankets or hot boxes) is prohibited. See Construction Guideline U2-11 Note 8, or in the Network area, Network Construction Guideline NDK-10 Note 10.

C. Rigid Steel Conduit on Private Property

1. Minimum depth shall be 6” over rigid steel conduit. (36” for high voltage conduit — above 600 volts)
2. Conduit shall be rigid galvanized steel.
3. Minimum bend radius shall be 3 feet for 3-inch conduit, 4 feet for 4-inch conduit, and 5 feet for 5-inch conduit.

D. Direct Burial Cables on Private Property

Not allowed for new permanent construction.

Trenching Depths for Private Property

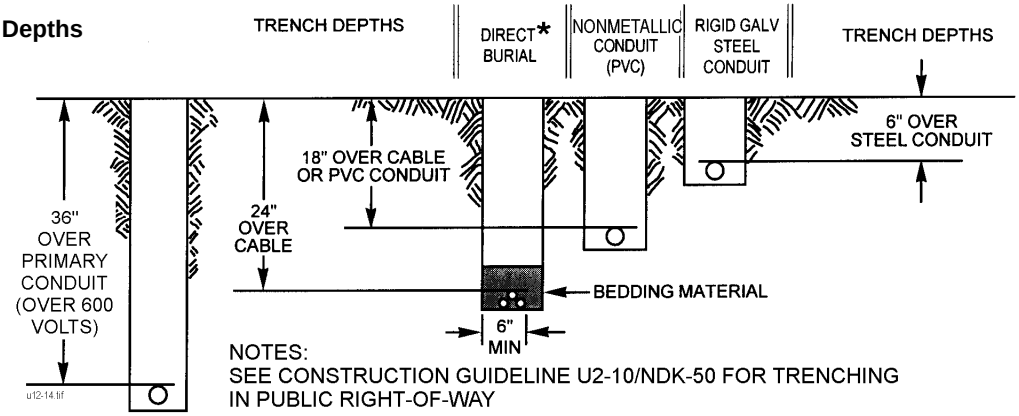

NOTES:
SEE CONSTRUCTION GUIDELINE U2-10/NDK-50 FOR TRENCHING IN PUBLIC RIGHT-OF-WAY

*NOT ALLOWED FOR PERMANENT CONSTRUCTION

standards coordinator	*standards manager*	*unit director*
Curtis Lu	John Shipek	Pam S. Johnson

SECONDARY SERVICE CONNECTION OUTSIDE NETWORK AREA

1. Scope

This guideline specifies Seattle City Light's options for new service connections to the most commonly requested types of service entrance. It includes connections for available 1-phase and 3-phase service voltages of less than 600 volts. Overhead (weatherhead-type) connections are not covered by this guideline. Primary-metered services are not covered by this guideline.

2. General Notes

2.1 Seattle City Light (SCL) provides, owns, and maintains all 26kV transformers.

2.2 SCL provides, owns, and maintains all utility wires and all SCL connectors.

2.3 The customer supplies National Electric Code (NEC) wires, bus bars, bus ways, and other bus enclosures.

2.4 The customer supplies conduits, vaults, handholes, and pads required for service.

2.5 The customer connects NEC wires to bus bars where required.

3. Secondary Service

3.1 Scope

Secondary services (less than 600 volts) are served from a SCL system transformer in the right-of-way or SCL easement. See SCL Construction Guideline U12-1.3 for single-phase residential services. Secondary services are subject to ampacity limits in SCL's *Requirements for Electrical Service Connection* (RESC). The customer provides and maintains NEC wire.

3.2 Current Transformer Enclosure and Terminal Can Enclosure

Figure 3.2, Current Transformer Enclosure/Terminal Can Enclosure

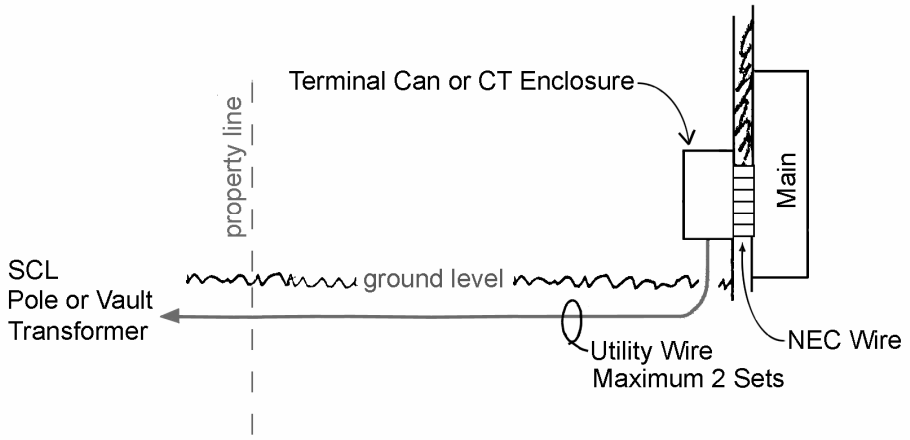

STANDARDS COORDINATOR	STANDARDS SUPERVISOR	UNIT DIRECTOR
Chris Detter	John Barnett	Richard Kent

3.2 Current Transformer Enclosure and Terminal Can Enclosure, continued

Table 3.2a, Terminal Can Size – Wall Mounted

		Maximum NEC Wires from Customer		
Size	**Maximum Number and Size of Connector**	**Number Sets**	**kcmil**	**Phase No.**
24″ x 32″ x 11″	1 set of 4-3 position Blackburn	2	250	3Ø
30″ x 36″ x 11″	1 set of 4-4 position Blackburn	3	350	3Ø
36″ x 36″ x 11″	1 set of 4-4 position Blackburn	3	350	3Ø
48″ x 48″ x 11″	1 set of 4-6 position Blackburn	5	500	3Ø

Table 3.2b, Current Transformer Enclosure

Size	Use
24″ x 48″ x 11″	1-phase service
36″ x 48″ x 11″	3-phase service

Notes 3.2

3.2.1. Customer provides and maintains terminal can/current transformer enclosure.

3.2.2. Customer provides wiring from terminal can/current transformer enclosure to meter. See RESC.

3.3 Multimeter Pack

Figure 3.3, Multimeter Pack

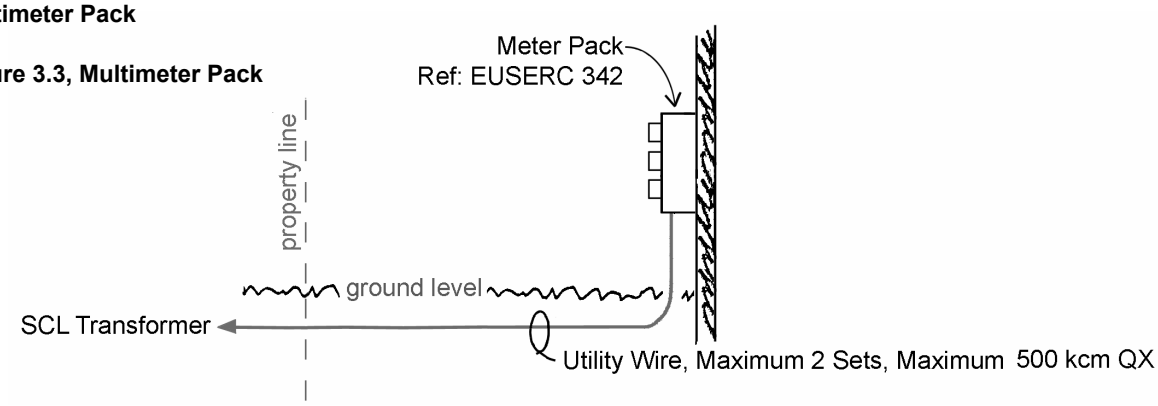

3.4 Handhole

Figure 3.4a, System Handhole

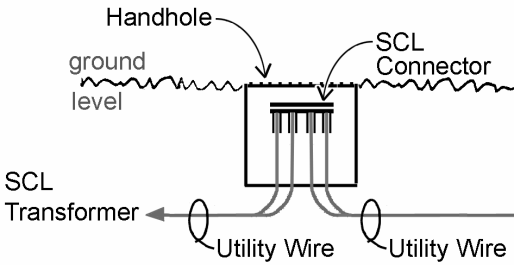

Figure 3.4b, Termination Handhole

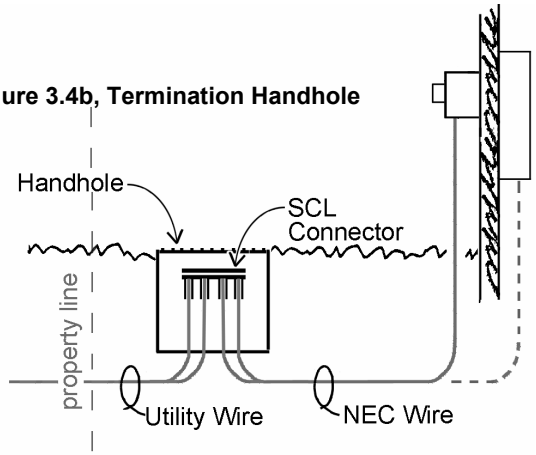

3.4 Handhole, continued

Note 3.4a, System Handhole

SCL provides handhole in right-of-way except for new multi-lot construction.

Note 3.4b, Termination Handhole

Customer provides handhole on private property.

Table 3.4, Handhole Connections

Size	Maximum Number and Size of Connector	Maximum NEC Wire from Customer		
		Number Sets	kcmil	Phase No.
17″ x 28″	1 set of 3-4 position Blackburn	3	350	1Ø
30″ x 30″	1 set of 3-6 position Blackburn	5	350	1Ø
233	1 set of 4-6 position Blackburn	5	350	3Ø
444	1 set of 4-8 position Blackburn	6	350	3Ø
644	1 set of 4-8 position Blackburn	6	500	3Ø
644	1 set of 4-6 position Homac	4	750	3Ø
577	1 set of 4-8 position Blackburn	6	500	3Ø
577	1 set of 4-8 position Homac	4	750	3Ø

3.5 Padmounted Bus Enclosure

Figure 3.5, Padmounted Bus Enclosure

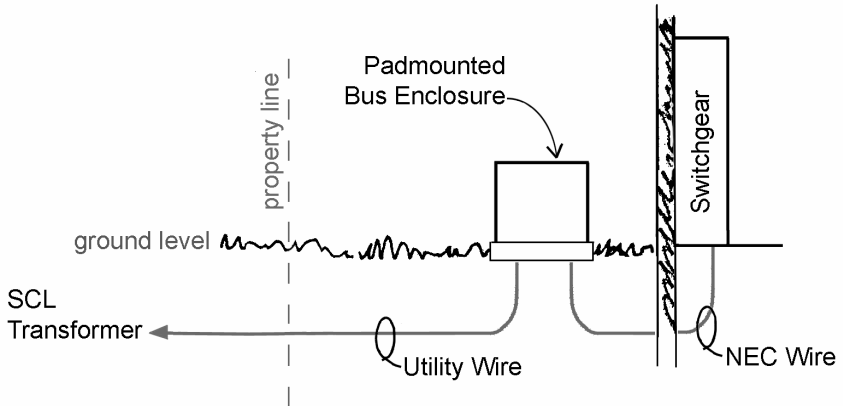

Notes 3.5

3.5.1. Padmounted bus enclosures are almost always associated with primary services.

3.5.2. Customer provides padmounted bus enclosure.

4. Primary Service Connections

4.1 Scope

Primary service refers to a service that requires a City Light transformer to be installed on private property. It is not to be confused with a primary-metered service where SCL terminates 26kV cables in the customer's switchgear.

4.2 Padmounted Transformer Service

Figure 4.2a, Padmounted Transformer – Customer Termination

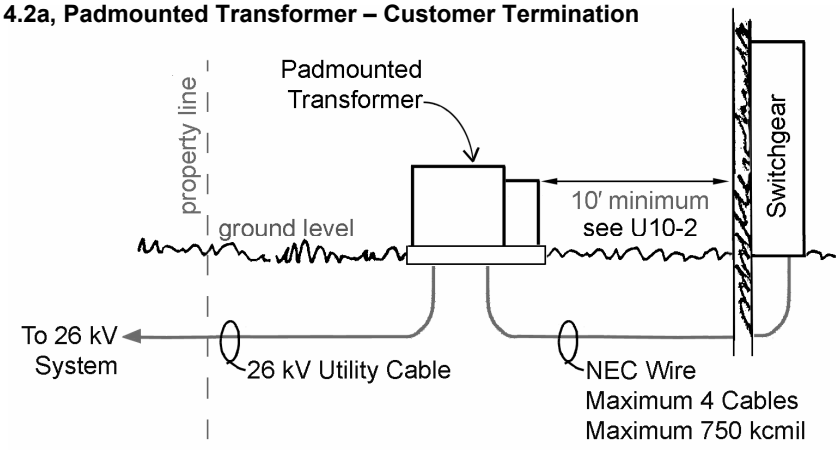

References 4.2a, SCL Construction Guidelines

U10-1.3 Transformer Pad Construction, Residential, 1 Phase, 25 kVA through 167 kVA

U10-1.5 Transformer Pad, Construction and Grounding,150 through 300 kVA, 3 Phase

U10-1.6 Transformer Pad, Construction and Grounding, 500 - 1,000 kVA, 3 Phase

U10-2 Transformer Vaults and Padmounts

Figure 4.2b, Padmounted Transformer – Service

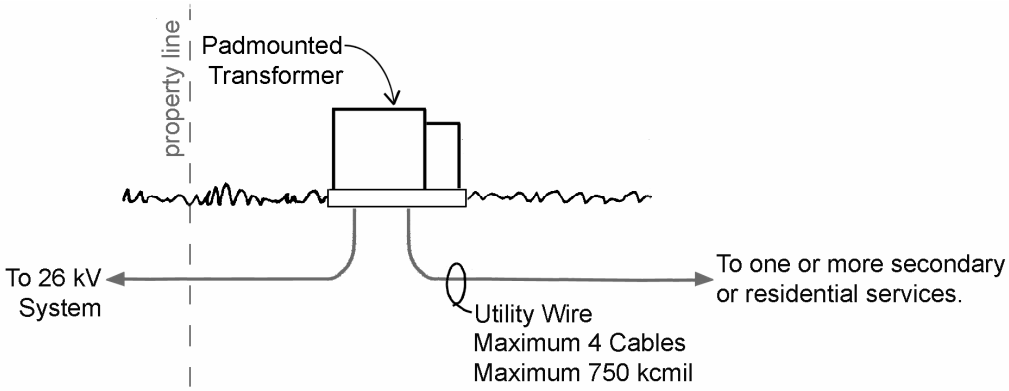

Notes 4.2b

4.2b.1. Transformer pad provided by customer.

4.2b.2. 750 kVA and larger padmounted transformers can accept six sets of cables.

4.3 Fenced Transformer Enclosure

Figure 4.3a, Minimum Enclosure: 12′ x 17′

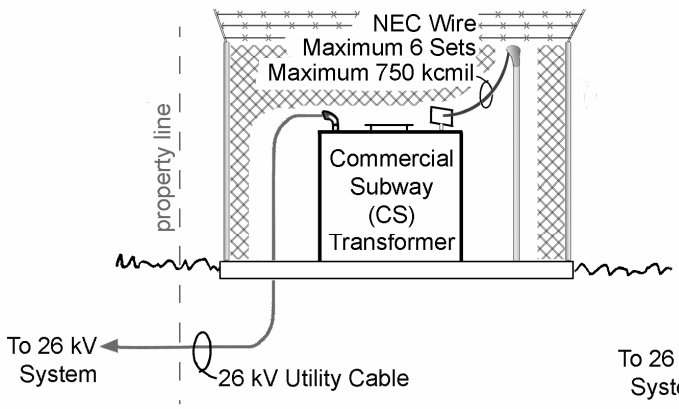

Figure 4.3b, Minimum Enclosure: 12′ x 15′

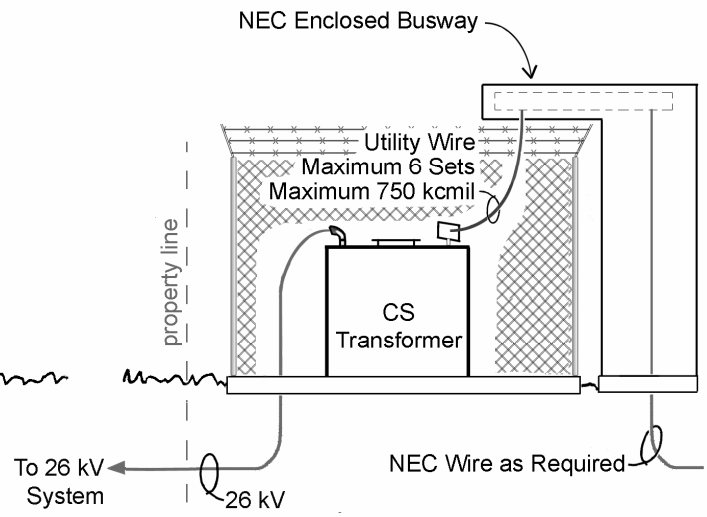

References 4.3

SCL Construction Guideline U10-1.2, Transformer Pad, Commercial and Industrial, Underground from Overhead

NEC Article 368 Busways

Note 4.3

Customer provides fenced enclosure.

4.4 In-Building Vault

In-building vaults are to be installed at ground level with walk-in access directly to the outdoors. A paved, unsloped access path is required between the vault door and the transformer drop-off area. Equipment Transportation Agreements require permission from a City Light Distribution Engineering Supervisor and are usually reserved for downtown, high-rise buildings. The vault must be dry (no standing water).

Figure 4.4a, Bus Extension

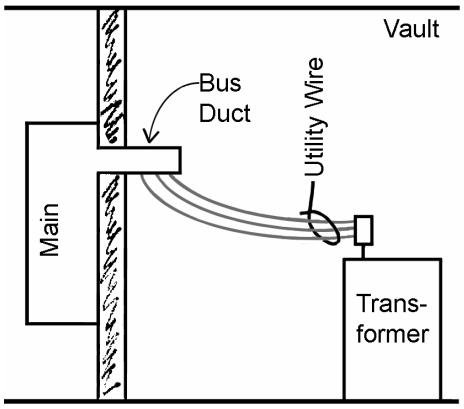

Note 4.4a, Bus Extensions: Maximum 6 utility cables.

References 4.4a, Bus Extensions, SCL Construction Guidelines

U11-9.1, Bus Extensions and Cable Tap Boxes

U2-8, In-Building Transformer Vaults (Non-Network Area)

U10-2.1, Transformer Service Vault in Building – Dry – With Indoor, In Building, Doorway Access, Outside Network Area

4.4 In-Building Vault, continued

Figure 4.4b, SCL Connector

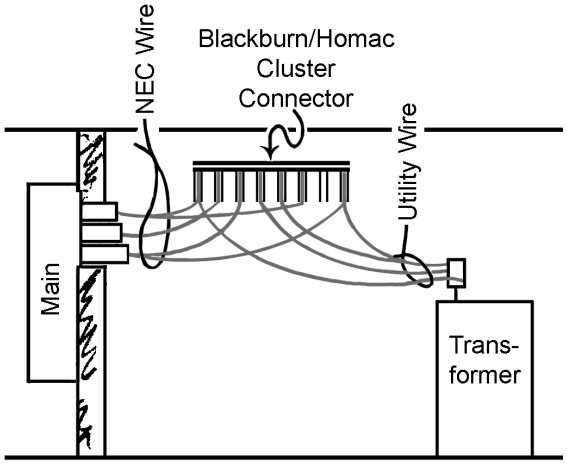

Figure 4.4c, EUSERC Termination

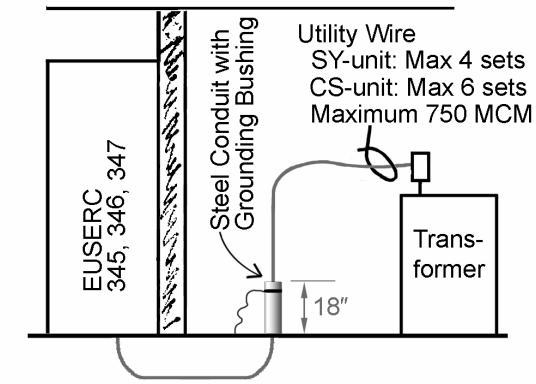

Notes 4.4c, EUSERC Termination

4.4c.1. Conduit must enter bottom of the EUSERC enclosure.

4.4c.2. EUSERC enclosure must be at the same level as the transformer facility and must be within 15 feet walking distance from the building exterior door with no more than two corners to walk around so that the cable may be fed from the exterior of the building.

Table 4.4, SCL Connector Maximums, In-Building Vaults

		Maximum NEC Wire from Customer			
Minimum Vault Size	**Maximum Number and Size of Connector**	**Number Sets**	**kcmil**	**Phase No.**	**Maximum Transformer**
10´ x 14´	1 set of 4-8 position Blackburn	6	500	3Ø	1 – CS Unit
10´ x 14´	1 set of 4-8 position Homac	6	750	3Ø	1 – CS Unit
15´ x 14´	2 sets of 4-8 position Blackburn	12	500	3Ø	1 – CS Unit
15´ x 14´	2 sets of 4-8 position Homac	12	750	3Ø	1 – CS Unit

References 4.4, In-Building Vaults, SCL Construction Guidelines

U2-8, In-Building Transformer Vaults (Non-Network Area)

U10-2.1, Transformer Service Vault in Building – Dry – With Indoor, In Building, Doorway Access, Outside Network Area

Note 4.4, In-Building Vaults:

4.4.1. Bus entrance preferred, see 4.4a.

4.4.2. Minimum height, 10 feet for CS unit, 8 feet for SY unit.

4.4.3. Cable Tap Boxes are not allowed in new installations.

4.5 Below Grade Vault Outside Building

Figure 4.5a, System Vault

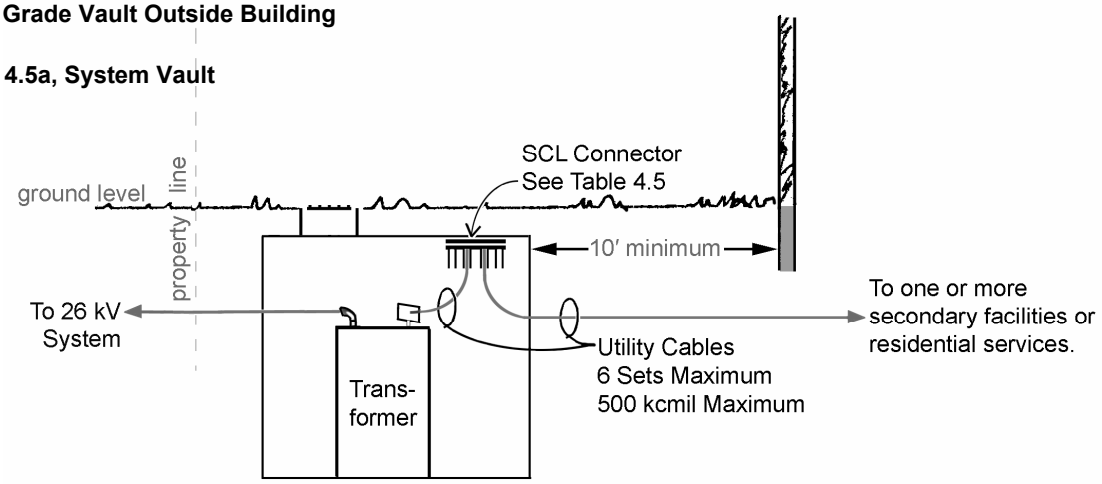

Note 4.5a, System Vault

Do not mix NEC wires and utility cables in vault to assist SCL crews with identifying NEC wires.

Figure 4.5b, Termination Vault

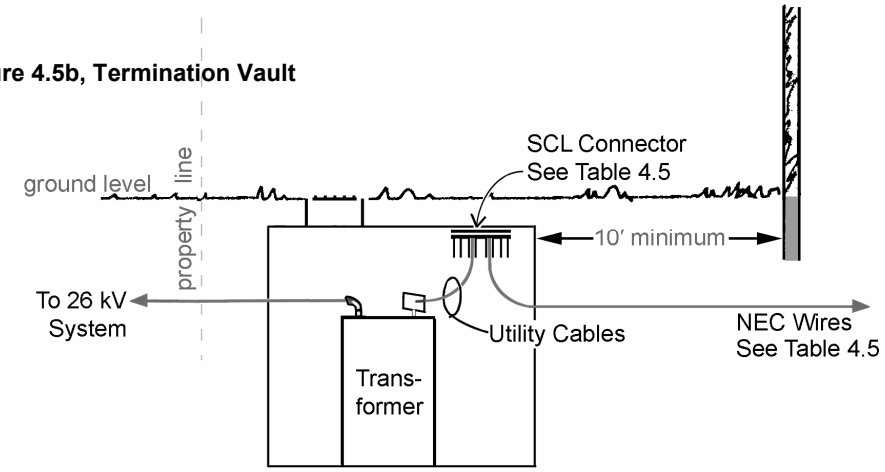

Note 4.5b, Termination Vault

NEC wires are not to be terminated in vault set in right-of-way or easement except for power services to foreign utilities (street light, telephone, TV, etc.).

Table 4.5, Below Grade Vault Outside Building

		Maximum NEC Wire from Customer			
Minimum Vault Size	**Maximum Number and Size of Connector**	**Number Sets**	**kcmil**	**Phase No.**	**Transformer, Maximum**
577-LDA	1 set of 3-6 position Blackburn	5	350	1Ø	1 – 75
507	1 set of 3-6 position Blackburn	5	350	1Ø	1 – 100
577-LA	1 set of 3-8 position Blackburn	6	350	1Ø	1 – 100
687	1 set of 4-8 position Blackburn	6	500	3Ø	2 – 100
712	1 set of 4-8 position Homac	6	500	3Ø	2 – 167 or 3 – 100
814	1 set of 4-8 position Blackburn	6	500	3Ø	1 – SS CS Unit
814	1 set of 4-8 position Homac	6	750	3Ø	1 – SS CS Unit
818	1 set of 4-8 position Blackburn	6	500	3Ø	1 – SS CS Unit
818	1 set of 4-8 position Homac	6	750	3Ø	1 – SS CS Unit

6. Tagging Customer's Cable

SCL will place tags on customer owned and maintained NEC wires in SCL facilities per SCL Construction Guideline U4-3.3, Cable Tagging and Phase Markings. The label tag will typically read ″CUSTOMER OWNED.″

Figure 6, Customer's Cable Tag for Service Termination Point

SEATTLE CITY LIGHT

CONSTRUCTION GUIDELINE

STANDARD NUMBER: **U12-5/NMT-20**
PAGE: 1 of 1
DATE: January 9, 1963
REV: July 10, 2002

METER SOCKET CONNECTIONS AND CONDUCTOR IDENTIFICATION
200 AMPERE MAXIMUM

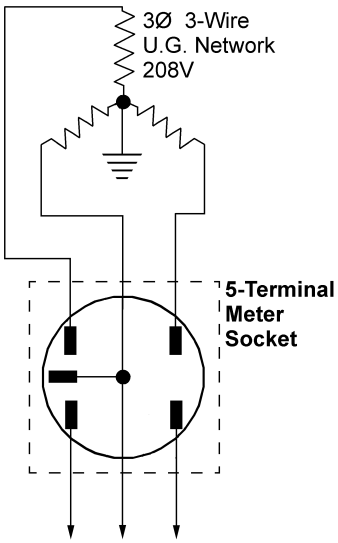

3Ø 3-Wire
POWER LOAD

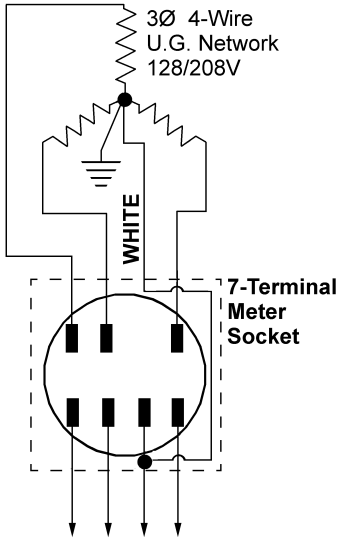

3Ø 4-Wire
LIGHT & POWER LOAD

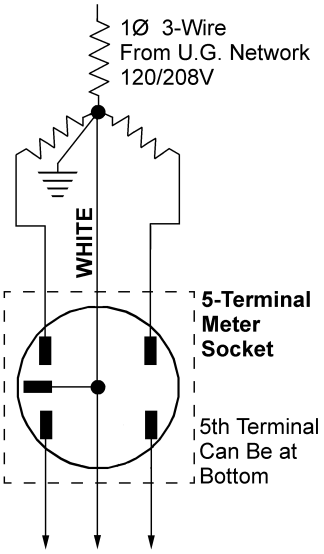

3Ø 3-Wire
LOAD 120/208V

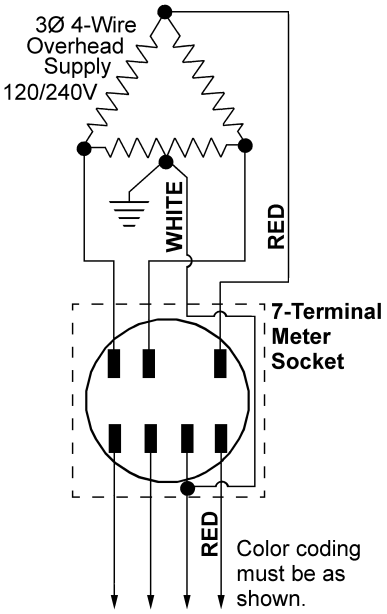

3Ø 4-Wire
LIGHT & POWER LOAD

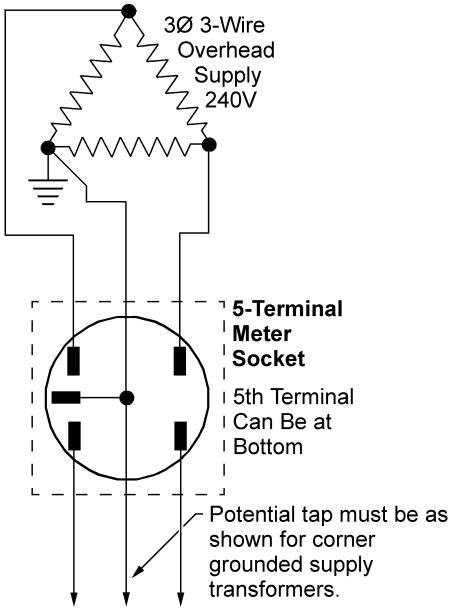

3Ø 3-Wire
POWER LOAD
(grounded at one corner)

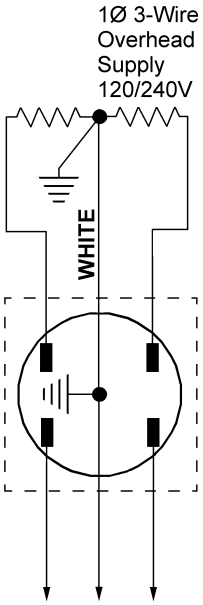

1Ø 3-Wire
LOAD 120/240V

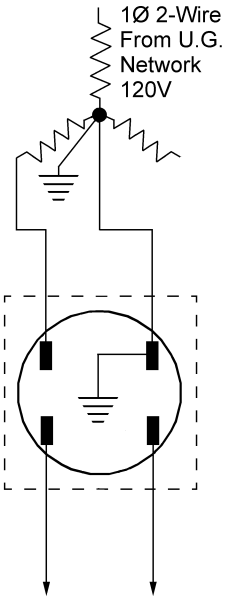

1Ø 2-Wire
LOAD 120

ORIGINATOR	STANDARDS COORDINATOR	STANDARDS SUPERVISOR	UNIT DIRECTOR
Jim S. Horn	Charles L. Shaffer	John C. Skinner	Gordon Jay

ELECTRICAL INSULATING OIL SAMPLING AND TESTING – FLAT GAP

I. General

The dielectric strength of oil is affected by the most minute traces of certain impurities, particularly water. It is important that the greatest care be taken in obtaining the samples and in handling them to avoid contamination. There have been low dielectric test results reported which, upon investigation, have been found to have been largely a matter of carelessness in handling. The following instructions must be followed to assure accurate results. Reference ANSI/IEEE C57.106-1977.

II. Sampling

A. Equipment

Sample bottles - The sample bottle shall be clear glass or approved plastic of at least 16 ounce capacity. It must be clean and dry. The bottle shall be thoroughly rinsed with kerosene or other hydrocarbon solvent. A low boiling point solvent shall not be used as its rapid evaporation may cool the container, causing moisture condensation.

Caution: Do not use natural rubber gaskets or stoppers. The sulfur in the rubber will contaminate the oil.

B. Procedure

Caution: Do not draw samples of oil that are colder than the surrounding air. The oil will condense moisture and contaminate the sample. Do not draw samples in the rain or snow or when the relative humidity exceeds 50%.

1. From drums or shipping containers:
   a. Open the container, insert the thief and quickly empty the thief into the sample bottle. Fill the sample bottle. Reseal the container and the sample bottle. Deliver the sample to the testing area as soon as possible.
   b. Thoroughly clean and dry the sampling thief using the procedure for sample bottles shown in paragraph A., above.
2. From the oil-filled equipment:
   a. Draw enough oil from the chamber to wash any sediment from the drain valve and discard it.
   b. Fill the sample bottle and remove it from the oil stream before closing the valve. Seal the sample bottle and deliver it to the testing area as soon as practical.

      Note: Every precaution should be taken to assure that the sample represents the actual condition of the oil in the chamber and not that in the drain valve.
   c. Visually examine the oil. If the sample contains free water it is not suitable for dielectric test and the sample and bottle should be discarded. A second sample should be taken. If free water still exists in the sample, the oil in the apparatus should be replaced.

STANDARDS COORDINATOR	STANDARDS SUPERVISOR	UNIT DIRECTOR

III. Testing (ASTM D 877-82)

A. Equipment

The transformer and the source of supply of energy shall not be less than 1/2 kVA. Regulation shall be so controlled that the high tension testing voltage taken from the secondary of the testing transformer can be raised gradually. The rate of rise shall approximate 3,000 volts per second. The voltage may be measured by any approved method which gives root-mean-square values (rms).

Some protection is desirable to prevent excessive flow of current when breakdown of the oil takes place.

The test cup for holding the sample of oil shall be made of a material having a suitable dielectric strength. It must be insoluble in and unattacked by mineral oil and petroleum distillates and nonabsorbent as far as moisture, mineral oil, and petroleum distillates are concerned.

The electrodes in the test cup between which the sample is tested shall be circular discs of polished brass or copper, 1 inch in diameter, with square edges. The electrodes shall be mounted in the test cup with their axes horizontal and coincident, with a gap of 0.100 inch between their adjacent faces, and with tops of electrodes about 1-1/4 inches below the top of the cup. (A suitable test cup is shown in Figure 1 and portable testing outfit in Figure 2.)

B. Adjust and Test the Equipment

1. Check the spacing of the electrodes. Adjust to 0.100 inch and lock in place.
2. Clean the test cup with a dry hydrocarbon solvent such as kerosene or Stoddard solvent.
3. Fill the test cup with new, dry, filtered liquid of the type being tested. Energize the tester and note the breakdown level. If it is less than 25 kV, reclean it.

Caution: Evaporation of the solvent from the electrodes may chill them enough to cause moisture to condense on them.

C. Testing the Oil

Note: The temperature of the test cup and of the oil when tested shall be the same as that of the room, which should be between 20° C and 30° C (68° and 86° F). Testing at lower temperatures is likely to give variable results.

1. Gently invert the sample bottle and swirl four or five times to mix any settled impurities. **DO NOT SHAKE**.
2. Rinse the test cup with the oil to be tested and discard the oil.
3. Fill the test cup immediately with the oil to a level 0.79 inch (20 mm or 25/32 inch) above the electrodes.
4. Gently agitate the oil with a rocking motion of the cup and let set for three minutes.
5. Apply the voltage, increasing uniformly at 3,000 volts per second until breakdown. Disregard any momentary discharges across the gap.
6. Repeat Step 5 for each of five tests of the same sample and record the results.

Note: When oil is tested in considerable quantity, one breakdown test shall be made on each of two fillings of the test cup. If neither breakdown is below the specified value, the oil may be considered satisfactory and no further tests shall be required. If either of the breakdowns is less than the specified value, a breakdown shall be made on each of three additional fillings and test results analyzed in accordance with Section E.

D. Test Reports

1. The test report shall include the following. (See sample form attached.)
   a. Source of oil sample and name of sampler.
   b. Breakdown voltage for each test (5).
   c. Average breakdown voltage.
   d. Temperature of the oil being tested.
   e. Date of the oil test.
   f. Name of tester.
   g. Location of testing area.
   h. Validity of test (see Section E).

E. Validity of Test Data

1. Subtract the lowest kV reading from the highest kV reading and multiply the difference by 3.
2. If the above number is smaller than the next-to-lowest kV reading, the test is valid.
3. If the above number is equal to or larger than the next-to-lowest kV reading, the test is NOT valid.

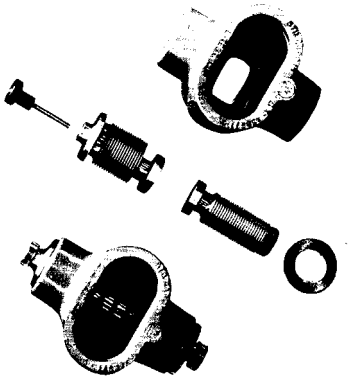

Figure 1. Oil or Fluid Test Cup for Dielectric Test.

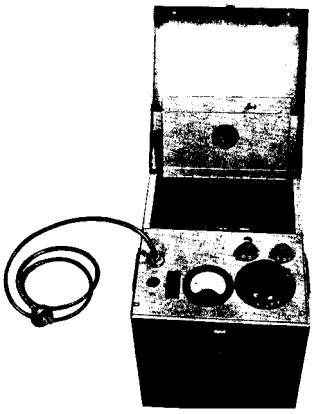

Figure 2. Portable Oil Testing Set 1/2 kVA 35,000 Volts.

OIL TEST REPORT

Oil Sample from _____

_____ by _____

Date _____ Temperature _____

Tested at _____

Tested by _____

_____

Test No. _____ Breakdown kV _____

1 _____

2 _____

3 _____

4 _____

5 _____

Average _____ kV Minimum acceptable avg. is 22 kV (26 kV system)

VALIDITY CHECK

High _____ minus Low _____ =_____

Multiplied by 3 = _____*

Next-to-Low = _____**

Test valid? Yes No

(** must be larger than * for test to be valid)

dummy tab front - DU

dummy tab back - DU

RECOMMENDED TYPICAL STREET MARKING

Notes:

1. Use the recommended abbreviations and make your letters clear and concise.
2. Indicate bends, offsets, and/or dead ends. Do not leave the other utility guessing.
3. Do not attempt to show more than one utility at any one location.
4. For underground facilities not noted in abbreviations, use symbols as necessary. Be clear and concise. Try not to confuse with other abbreviations.
5. Pavement openings and street markings made in city streets shall be identified by utility with a triangle inside of which shall be placed the utility code in four-inch letters of the color set forth in the table below.
6. Identification letter shall be placed adjacent to street opening, or, on face of nearest curb, in line with the cut.
7. Identification letter and color coding shall also be used for marking existing utilities in the street area.

Pavement Opening And Street Marking Identification

Utility	Sign	Code	Color
CATV	TV	TV	Orange
City Light	CL	CL	Red
Engineering Maintenance	E	E	Green
Gas	G	G	Yellow
Metro Sewer	D	D	Green
Metro Transit	M	M	Brown
Petroleum	O	O	Yellow
Sewer Utility	SU	SU	Green
Side Sewer	SS	SS	Green
Steam	S	S	Yellow
Street Light	SL	SL	Red
Telephone	T	T	Orange
Traffic Control	TR	TR	Aluminum
Utility Permit	UP	UP	Green
Water	W	W	Blue
Western Union	WU	WU	Orange

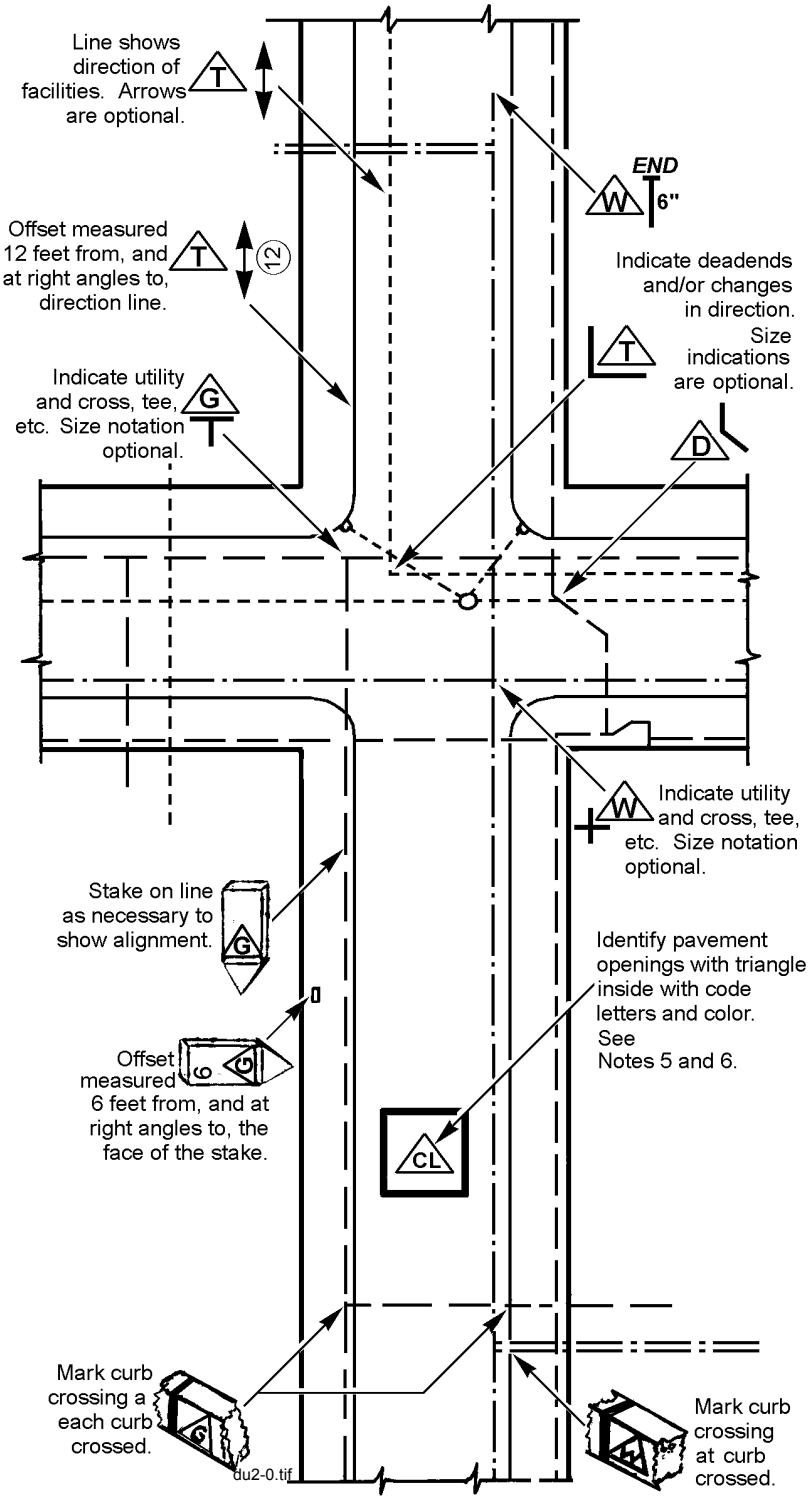

ORIGINATOR	STANDARDS COORDINATOR	STANDARDS SUPERVISOR	UNIT DIRECTOR
Jim S. Horn	Charles L. Shaffer	John Skimmer	Hardie Frey

JOINT PREPARATION FOR BOLTED AND COMPRESSION JOINTS WITH COPPER AND/OR ALUMINUM (PLUS STEEL to COPPER)

I. BOLTED JOINTS

A. Aluminum to Aluminum

1. Both surfaces must be flat. File off all burrs or irregularities and then vigorously clean all contact surfaces with a stiff stainless steel wire brush to remove oxides. A typically bright aluminum surface should be obtained. Do not wire-brush plated contact surfaces. *NOTE*: It is not necessary to wire brush aluminum lugs that are tin plated.
2. **Immediately coat these contact areas with a liberal amount of contact sealant, City Light Stock No. 726182**
3. Re-clean the surfaces with the stainless steel wire brush through the sealant. Do not remove the sealant.
4. Install fitting with bolts finger tight. If a generous bead of compound does not appear, open the joint and add more sealant.
5. Alternately (criss-cross) and evenly tighten bolts with a torque wrench to the values shown in Section IV.
6. Excess sealant squeezed out of joint can be left as is or can be lightly smoothed along contact line.
7. All excess sealant must be removed entirely from cable insulation.

B. Aluminum to Copper

1. Both surfaces must be flat. File off all burrs or irregularities and then vigorously clean all contact surfaces with a stiff stainless steel wire brush to remove oxides. A typically bright surface should be obtained. Do not wire-brush plated contact surfaces. *NOTE*: It is not necessary to wire brush aluminum lugs that are tin plated.
2. **Immediately coat these contact areas with a liberal amount of contact sealant, City Light Stock No. 726182**
3. Re-clean the aluminum surface with the stainless steel wire brush through the sealant. Do not remove the sealant.
4. Install fitting with bolts finger tight. If a generous bead of compound does not appear, open the joint and add more sealant.
5. Alternately (criss-cross) and evenly tighten bolts with a torque wrench to the values shown in Section IV.
6. Excess sealant squeezed out of joint can be left as is or can be lightly smoothed along contact line.
7. All excess sealant must be removed entirely from cable insulation.

NOTE: Do not position the aluminum member in such a way that would allow water to drain from the copper connector over (or into) the aluminum.

ORIGINATOR	STANDARDS COORDINATOR	STANDARDS SUPERVISOR	UNIT DIRECTOR
Jim S. Horn	Charles L. Shaffer	John C. Skinner	Betty Robin

C. Copper to Copper

1. Vigorously clean the contact surfaces with sandpaper. Wipe clean with rag.
2. Alternately and evenly tighten bolts with a torque wrench to the values shown in Section IV.

***NOTE*:** Contact sealants are not normally required in copper connections. However, the use of sealant in severe corrosive environments and direct burial applications is recommended. Use City Light Stock No. 725696.

D. Copper to Aluminum with Copper Liner

1. The use of a contact sealant in this type of joint is not absolutely necessary. However, for maximum corrosion protection of the joint, the steps given in A.1 to A.5 above should be followed. Use City Light Stock No. 726182.

E. Copper to Steel and Steel to Steel

1. Clean steel contact surface with sandpaper until clean, bright surface is obtained. Apply NO-OX-ID "A" (Stock No. 725696) to surface. Clean copper with sandpaper and bolt joint together. Torque to values in Section IV. Surfaces should be wiped clean with rag before applying sealant.

F. No electrical connection (including ground connections) shall have any form of gasket material sandwiched in them! Further, no ground connections shall depend on, or use, a Kwik-Bolt or Tampin or any concrete anchor as a bolted connection.

II. COMPRESSION JOINTS

A. Aluminum Connector to Aluminum Wire

1. Vigorously clean the conductor contact area with a stainless steel brush. Do not attempt to clean connector barrel. It is not necessary to apply sealant to the conductor. All connectors will have sealant applied at the factory, except full tension connectors with steel inner sleeves.
2. Fully insert the conductor into the barrel and crimp. Crimping should begin nearest the center of sleeve type connectors. For closed barrel type connectors crimping should begin at the closed end and work toward the open end. Excess sealant squeezed out of the joint may be smoothed out around the mouth of the barrel. All excess sealant must be removed from any cable insulation.
3. On all compression joints in Network areas, use tool and die referenced on NSV-10. Do not use "versa crimp" type tools for crimp connections in Network areas.
4. Do not use a copper connector on aluminum conductor!

B. Copper Connector to Copper Wire

1. Vigorously clean the conductor contact surfaces with a stainless steel wire brush. Do not attempt to clean connector barrel. In general it is not necessary to apply sealant to the conductor or connectors. The use of sealant in severe corrosive environments and direct burial applications is recommended. Use City Light Stock No. 725696.
2. Fully insert the conductor into the barrel and crimp. Crimping should begin nearest the center of sleeve type connectors. For closed barrel type connectors, crimping should begin at the closed end and work toward the open end.

C. Aluminum Connector to Copper Wire

1. Vigorously clean the conductor contact area with a stainless steel brush. Do not attempt to clean connector barrel. It is not necessary to apply sealant to the conductor. All connectors will have sealant applied at the factory, except full tension connectors with steel inner sleeves.
2. Fully insert the conductor into the barrel and crimp. Crimping should begin nearest the center of sleeve type connectors. For closed barrel type connectors, crimping should begin at the closed end and work toward the open end. Excess sealant squeezed out of the joint may be smoothed out around the mouth of the barrel. All excess sealant must be removed from any cable insulation.

III. CONTACT SEALANTS

Gritted sealants (City Light Stock No. 726180) are primarily used in aluminum compression connectors. Aluminum compression connectors have sealant applied at the factory, except full tension connectors with steel inner sleeves.

Non-gritted sealant, City Light Stock No. 726182, is recommended for flat connections. No. 726182 is a petroleum base inhibitor. Stock No. 725696 is used for copper to steel and copper to copper and steel to steel as a corrosion preventive.

NOTE: Care should be taken to prevent excess sealant from being applied to hardware since torque values will be affected if the hardware becomes over lubricated.

IV. TORQUE VALUES (FOOT-POUNDS)

Bolt Size	Aluminum NO-OX-ID Coated	Silicon-Bronze	Stainless Steel
3/8 x 16	11	20	20
1/2 x 13	25	40	40
5/8 x 11	55	55	55
3/4 x 10	70	70	70

Aluminum bolt setups that are to be torqued need a little No-Ox-Id (stock No. 726181) on the threads for proper torque.

When using Belleville washer/aluminum bolt assembly (City Light Stock Nos. 782050, 782051, and 782052), tighten until the Belleville washer is flat as determined by a sudden stop. Do not back off.

When using Belleville washers with steel bolts, tighten until the Belleville washer is flat.

SEATTLE CITY LIGHT

CONSTRUCTION GUIDELINE

STANDARD NUMBER: **DU5-5**

PAGE: 1 of 2

SUPERCEDING: October 27, 2003

EFFECTIVE DATE: May 23, 2005

POLE TERMINATION – 600 VOLT UNDERGROUND TO OVERHEAD

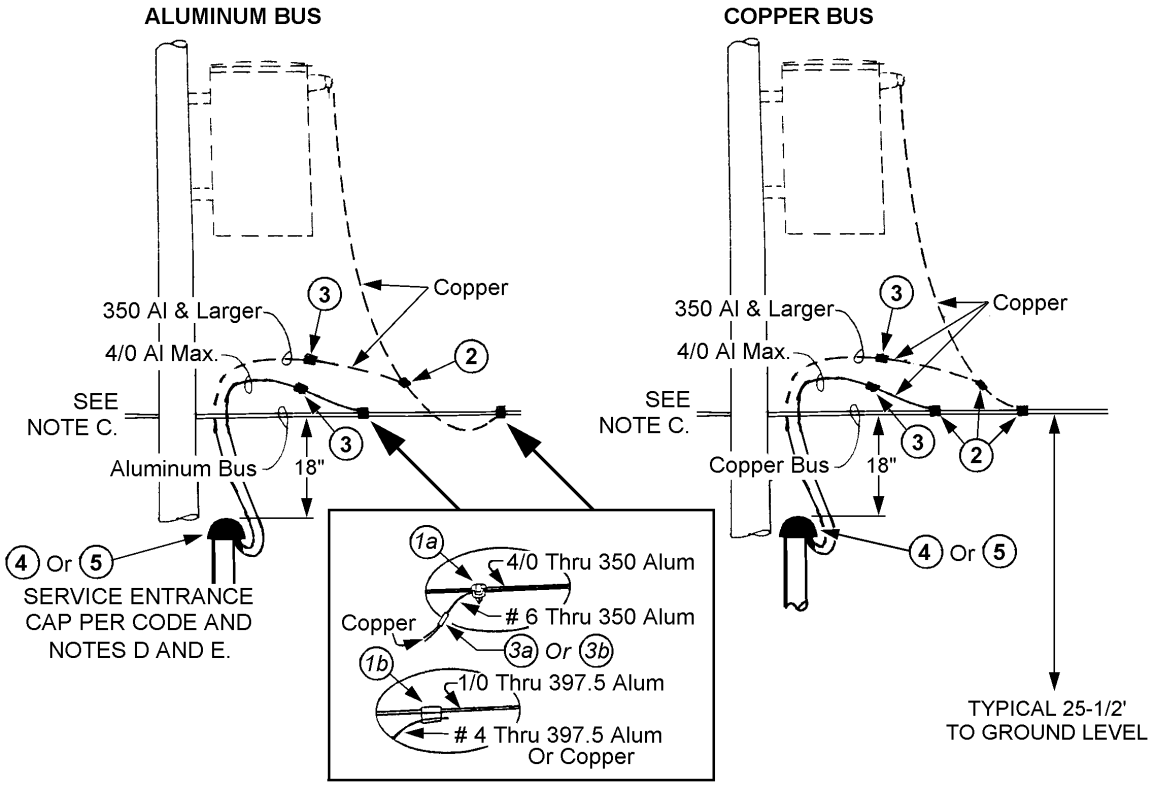

1. Notes:

A. Conduit to be installed 18 inches below secondary bus and clear telephone by 42 inches.

B. Tape all connections with plastic tape or apply heat shrink sleeves. Tape with a minimum of three layers of plastic electrical tape (Stock No. 736655E). Heat shrink tubing may be used in place of plastic tape for straight splices only.

C. City Light to make all connections of service wire to secondary bus on pole.

D. Use service entrance cap only on three-inch and smaller continuous conduit services where water could get into customer's switchgear.

E. For continuous conduit services 3-1/2 inches and larger, seal the conduit entrance. Direct exposure to sunlight will cause deterioration of the polyurethane filler foam if used to seal entrance. Such deterioration effects can be prevented with a coat of exterior-grade paint.

F. Generally, the copper cable between the aluminum cable and the copper bus will be the same size as the aluminum cable, however it is permissible to reduce the copper one size.

STANDARDS COORDINATOR	STANDARDS SUPERVISOR	UNIT DIRECTOR
Charles L. Shaffer	John Schimmer	Hardie Frey

2. Material List

Item	Description	Cable Size and Die		Stock No.	Matl. Std.
1a	TAP, two bolt, aluminum	4/0 - 350 to #6-350		651132	6693.5
1b	TAP, Ampact	See Construction Guideline D14-1 for sizes and ranges		651090 to 651107	AMP
2	TAP, two bolt, copper	2/0 to #10 - 2/0		669379E	6693.7
		1/0 - 4/0 to #10 - 4/0		669380E	6693.7
		250 - 350 to #10 - 350		669381E	6693.7
		400 - 500 to #10 - 500		669382	6693.7
		400 - 800 to 3/0 to 800		669383	6693.7
3a	SPLICE, straight, Al-Cu, Versa Crimp	#10 - 1/0		650100E	6501.1
		#8 - 2/0		650102E	6501.1
		#4 - 4/0		650104E	6501.1
		2/0 - 350		650106E	6501.1
		4/0 to 500		650138E	6501.1
3b	SPLICE, straight, Al-Cu	#4 - 4/0 to #4 - 4/0	VC6	650104E	6501.1
		350 - 350	U31 ART	650609	6774.1
		500 - 500	U34 ART	650611	6774.1
		750 - 750	U39 ART	650613	6774.1
		500 - 350 (reducing)	U34 ART	650591	65-4
		750 - 500 (reducing)	U39 ART	650593	65-4
4	CAP, service entrance, 1/2 to 3			731425 to 731431	7314.4

3. Heat-Shrink Tubing

City Light Material Standard 7374.5

Splice Cover for the Elimination of Taping

	Connectors		Tubing			
			ID, in.			
Cable Size, AWG / kcmil	Cu	Al	Min. Expanded	Max. Recovered	Length, in.	Stock No.
1/0-4/0	0.51 - 0.69	0.906	1.10	0.37	9	737450E
250-500	0.75 - 1.06	1.125 - 1.32	1.50	0.50	12	737452E
750	–	1.59	2.00	0.75	12	737455E

POLE TERMINATION, 3Ø 26 kV DISTRIBUTION - METAL OXIDE ARRESTER, #1/0 28 kV XLP, 2/C & #8 KERITE

Note: Use this Construction Guideline where fault duty is 40,000 A or less. Current limiting fuses protect the surge arresters which have a minimum fault-withstand rating of 20,000 A rms symmetrical.

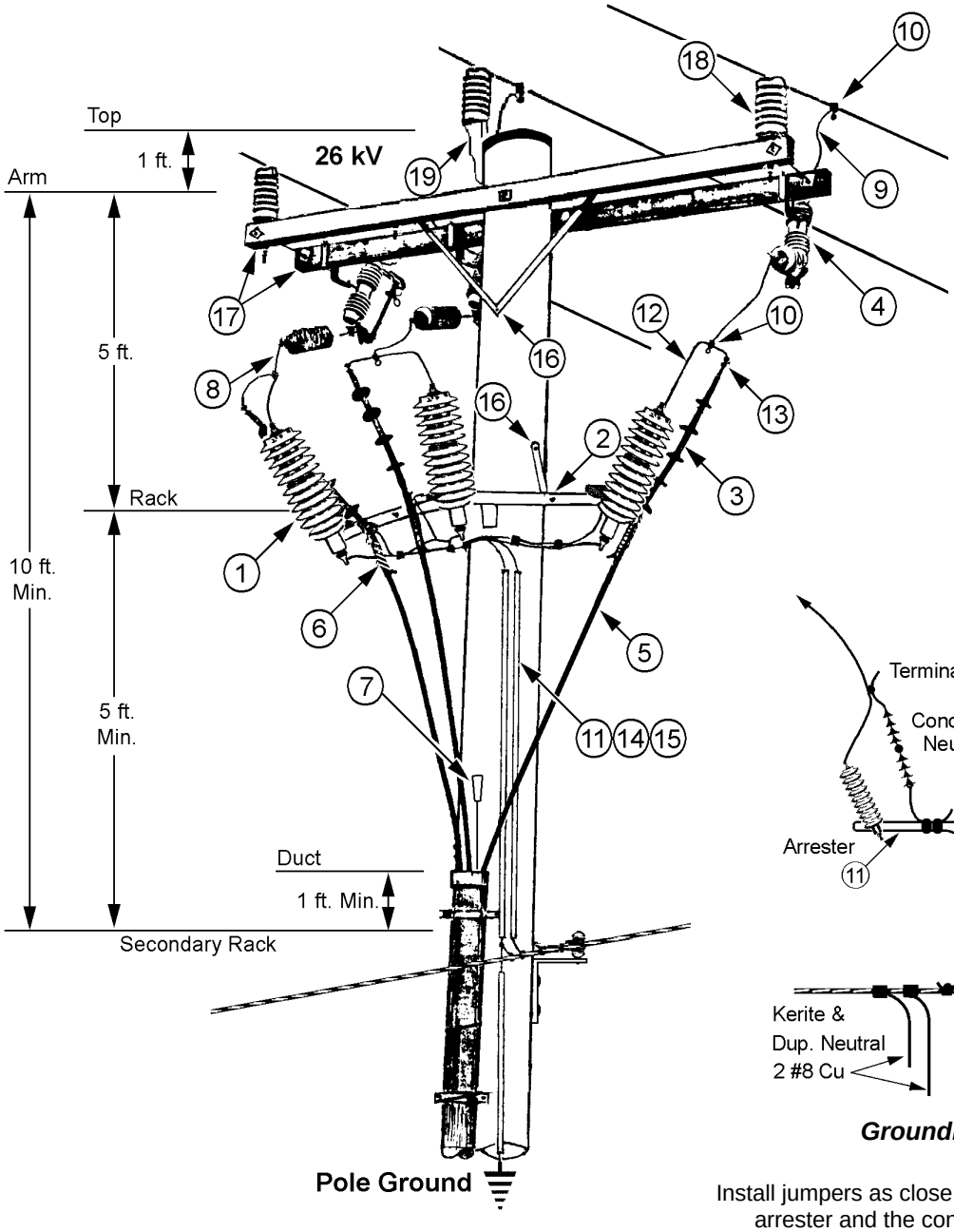

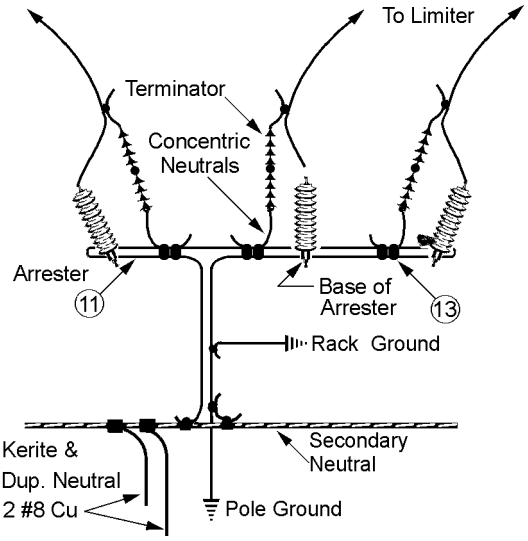

Grounding Schematic

Install jumpers as close as possible between base of arrester and the concentric neutral at base of terminator.

STANDARDS COORDINATOR	STANDARDS SUPERVISOR	UNIT DIRECTOR

Material List

Item	Quantity	Description	Stock No.
1	3	Arrester, Surge, 17 kV MCOV	680115
2	1	Bracket, Terminator and Arrester Mounting	686835
	1	Bolt, Machine, Galvanized 5/8″ x L	780838E to 780846E
	4	Screw, Lag, 1/2″ x 6″	785265E
3		Terminator, 27 kV	
	3	1/0 Solid, XLPE 2/C, Cold Shrink	686532
	3	Connector, Pigtail, 1/0 Solid	686056
	3	#8 Kerite, Cold Shrink	686531
	3	Connector, Pigtail, #8	686076
4	3	Cutout, 27 kV, Ultra Heavy Duty	682099
	3	Bracket, Cutout Mounting, Crossarm	682097
	3	Fuse Link, K Rated	per DU11-1
	3	Fault Limiter	per DU11-1
5	As Req'd	Cable, 28 kV	
		1/0 XLPE 2/C	602025
		#8 Kerite, w/ 2-#8 Neutral (60 Amp)	623650
6	3	Bracket, Cable Terminator Support	563221
7	1	Bracket and J-Bolt, Cable Grip Support	780127
	1	Grip, Support, Single Eye, 2″ x 2-1/2″	763555
	1	Screw, Lag, 1/2″ x 6″	785265E
	1	Washer, Round, Galvanized 1/2″ (Contractor furnished and installed.)	585025E
8	24 ft.	Wire, #2 Cu, Solid, Poly Insulated, MHD	611390
9	30 ft.	Wire, #4 Cu, Solid, Bare, Soft Drawn	610208
10	3	Clamp, Hot Line, Copper	
		2/0 to #8	580725E
		400 to #6	580727
		Stirrup for Aluminum (For Al-Cu, see D14-6.)	
		397.5 to 954	580678
11	45 ft.	Wire, #4 Cu, Solid, Poly Insulated, Soft Drawn	611442
12	10 ft.	Wire, #2 Cu, Solid, Bare, Hard Drawn	610006
13	0 to 5	Connector, Copper to Copper, Crimpet	
		#4 to #4	677323E
		#2 to #2	677326E
	9 to 14	Connector, Two Bolt, #2 to #10	669379E
	0 to 2	Connector, Aluminum to Copper	651090 to 651109
		Ampact (See Guideline D14-1 for sizes and ranges.)	
14	40 ft.	Moulding, Plastic (Furnished and installed by contractor.)	582060E
15	12	Staples, Moulding, 5/8″ x 2-1/4″	583200E
16	See Item 2	Screw, Lag, 1/2″ x 6″	785265E
17	2	Crossarm	540220
18	3	Insulator	690157
19	1	Bracket, Pole Top	563253

POLE TERMINATION, 3Ø 26kV DISTRIBUTION WING ARM CONSTRUCTION METAL OXIDE ARRESTER #1/0 28KV XLP, 2/C & #8 KERITE

Note: Use this Construction Guideline where fault duty is 40,000A or less. Current limiting fuses protect the surge arresters which have a minimum fault-withstand rating of 20,000 A rms symmetrical.

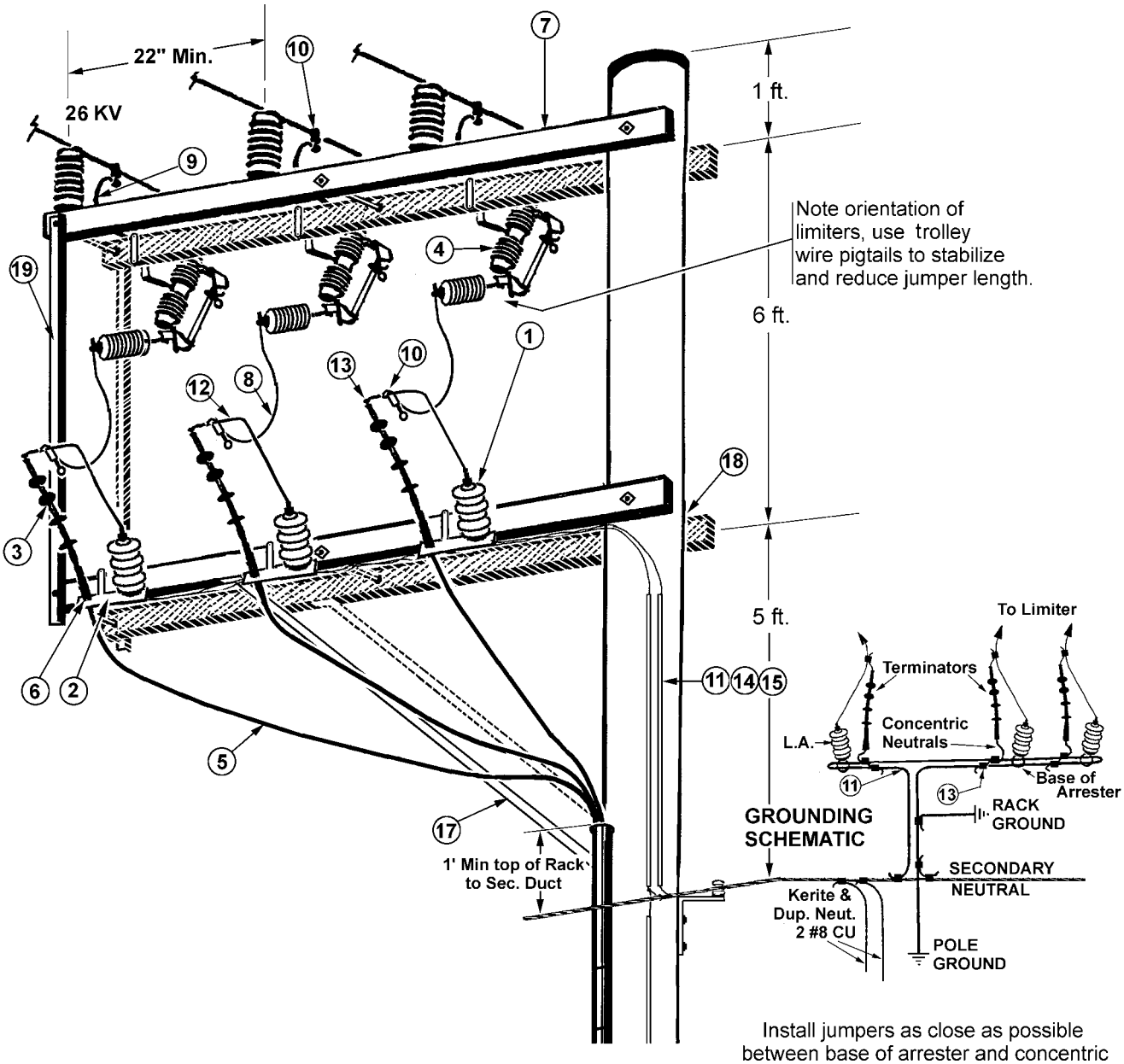

Install jumpers as close as possible between base of arrester and concentric neutral at base of terminator.

STANDARDS COORDINATOR	STANDARDS SUPERVISOR	UNIT DIRECTOR

Material List

Item	Quantity	Description	Stock No.
1	3	Arrester, Surge, 17 kV MCOV	680115
2	3	Adapter, Arrester and Pothead	720638
	3	Bolt, Machine, Galvanized 5/8 x L	780838E to 780846E
	3	Screw, Lag, 1/2 x 6	785265E
3		Terminator, 27 kV	
	3	1/0 Solid, XLPE 2/C, Cold Shrink	686532
	3	Connector, Pigtail, 1/0 Solid	686056
	3	#8 Kerite, Cold Shrink	686531
	3	Connector, Pigtail, #8	686076
4	3	Cutout, 27 kV, Ultra Heavy Duty	682099
	6	Bracket, Cutout Mounting, Crossarm	682097
	3	Fuse Link, K Rated	per DU11-1
	3	Fault Limiter	per DU11-1
5	As Req'd	Cable, 28 kV	
		1/0 XLPE 2/C	602025
		#8 Kerite, w/ 2-#8 Neutral (60 Amp)	623650
6	3	Bracket, Cable Terminator Support	563221
7	4	Arm, 11 foot Wing	540209
8	24 ft.	Wire, #2 Cu, Solid, Poly Insulated, MHD	611390
9	30 ft.	Wire, #4 Cu, Solid, Bare, Soft Drawn	610208
10	6	Clamp, Hot Line, Copper	
		2/0 to #8	580725E
		400 to #6	580727
		Stirrup for Aluminum (For Al-Cu, see D14-6.)	
		397.5 to 954	580678
11	45 ft.	Wire, #4 Cu, Solid, Poly Insulated, Soft Drawn	611442
12	10 ft.	Wire, #2 Cu, Solid, Bare, Hard Drawn	610006
13	0 to 5	Connector, Copper to Copper, Crimpet	
		#4 to #4	677323E
		#2 to #2	677326E
	9 to 14	Connector, Two Bolt, #2 to #10	669379E
	0 to 2	Connector, Aluminum to Copper	
		Ampact (See Guideline D14-1 for sizes and ranges.)	651090 to 651109
14	40 ft.	Moulding, Plastic (Furnished and installed by contractor.)	582060E
15	12	Staples, Moulding, 5/8 x 2-1/4	583200E
16	See Item 2	Screw, Lag, 1/2 x 6	785265E
17	2	Brace, Crossarm	563015
18	4	Gains, Pole	565313E
19	2	Brace, Crossarm, Vertical Spacing	563019

POLE TERMINATION, 3 Ø, 1200 AMP
2-750 KCMIL, 1/C, OR 2-1000 KCMIL, 1/C CABLES PER PHASE

Notes:

1. Wire from the top of the switch to the overhead conductors may be either 2-397.5 kcmil or 1-954 kcmil AAC (item 3).
2. On poles in the lead, use a double arm on top and a single arm below. Install the switch between the upper and lower arms. On deadend poles the switch may be installed horizontally under the top arm only.

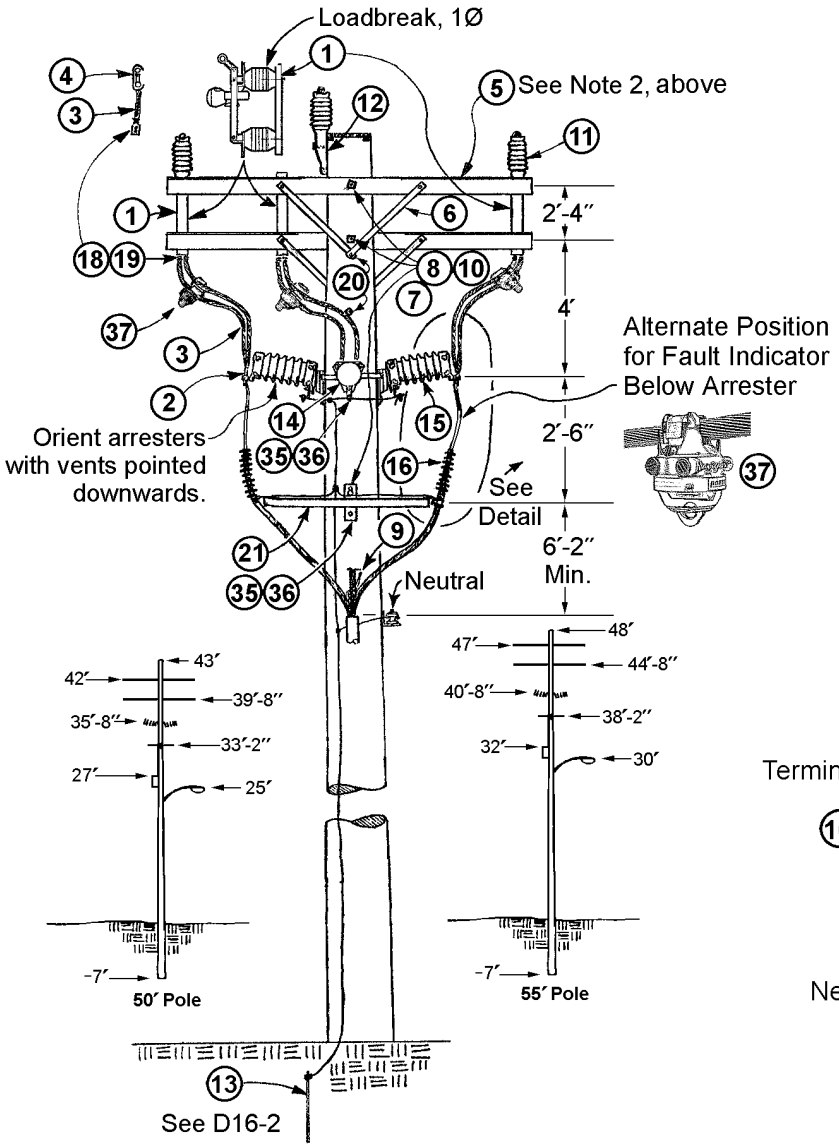

Figure 1, Construction Details

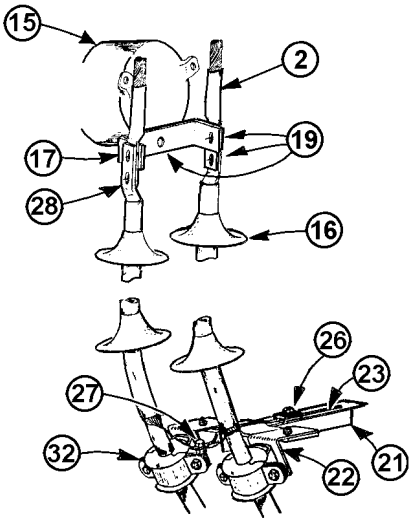

Figure 2, Terminator Detail

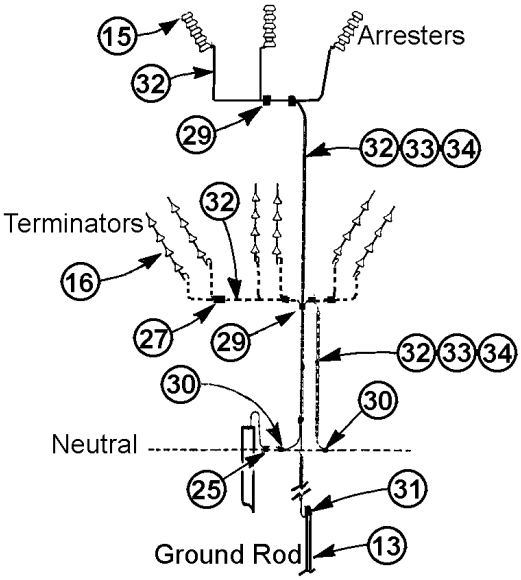

Figure 3, Grounding Diagram

STANDARDS COORDINATOR	STANDARDS SUPERVISOR	UNIT DIRECTOR
Charles L. Shaffer	John G. Skinner	Hardev Juj

Material List

Item	Quantity	Description		Stock No.
1	3	SWITCH, 1200 amp, Loadbreak, 1Ø, hot stick operable		250100
2	3 or 6	TERMINAL, Compression, aluminum	954.0 kcmil	651269
			397.5 kcmil	651296
3	as required	WIRE	397.5 kcmil AAC (Canna)	600113
			954 kcmil AAC (Goldenrod)	600126
			or 2-500 kcmil copper	610397
4	3 or 6	TAP, Ampact, per Construction Guideline D14-1		–
5	2 or 3	CROSSARM , Primary Feeder, 10´ Douglas fir, treated		540146
6	2 or 4	BRACE, Crossarm, 32″		563005E
7	4	BOLT, Machine, galvanized, 5/8″ x L″		780845E - 781046E
8	4	WASHER, Lock, coiled spring, 5/8″		584261E
9	2	GRIP, Cable Support, single eye, 3-1/2″ - 4″		763560
10	4	WASHER, Square, curved, 4″ x 4″		584775E
11	3	INSULATOR, Line Post, 34.5 kV, clamp top		690159
12	1	BRACKET, Insulator, pole top		563253
13	1	GROUND ROD, 5/8″ x 8´		564238E
14	1	BRACKET, Arrester Mounting		720641
15	3	ARRESTER, Lightning, intermediate class		680121
16	6	TERMINATOR, cold shrink, 750 to 1000 kcmil		012126
17	3	BRACKET, arrester to cable		563226
18	12 or 9	CONNECTOR, Compression, aluminum	954.0 kcmil	650267
			397.5 kcmil	651224
19	27	BOLT ASSEMBLY, aluminum, 1/2″ x 2-1/2″		782051
20	3	SCREW, Lag, galvanized, 1/2″ x 4″		785261E
21	1	BRACKET, Terminator Mounting		686835
22	6	BRACKET, Terminator Support		686466
23	6	INSULATOR, Cable Support	1000 kcmil	690777
			750.0 kcmil	690775
25	2	CONNECTOR, Tap, "C" type, 4/0 to 4/0		651091
26	3	CONNECTOR, cable to flat		676674
27	3	TAP, split bolt, #4		668864E
28	6	CONNECTOR, Compression, copper	1000 kcmil	651295
			750.0 kcmil	651272
29	5	CONNECTOR, Crimpet, copper to copper		677323E
30	2	CONNECTOR, aluminum to copper, 4/0 to #4		651099
31	1	CLAMP, Ground Rod. 5/8″		564012E
32	as required	WIRE, #4 copper, solid, poly		611442
33	as required	MOULDING, 1/2″ x 8´, plastic		582060E
34	as required	STAPLES, 1/2″, galvanized		583200E
35	4	SCREW, Lag, Galvanized, 1/2″ x 6″		785265E
36	4	WASHER, Flat, galvanized, 1/2″		585025E
37	as required	FAULT INDICATOR, 1Ø, OH, strobe, hot stick installed		765872

SINGLE PHASE PRIMARY UNDERGROUND,15kV METAL OXIDE ARRESTER, #1 2/C, 27KV XLP CABLE

Note: Use this Construction Guideline where fault duty is 40,000 A or less. Current limiting fuse protects the surge arrester which has a minimum fault-withstand rating of 20,000 A rms symmetrical.

Note limiter orientation. Use trolley wire to stabilize and reduce jumper length.

Minimum clearance of jumpers shall be 12" Ø-Ø and 8" Ø-ground.

Keep jumpers as short as possible between terminator and arrester, top and bottom.

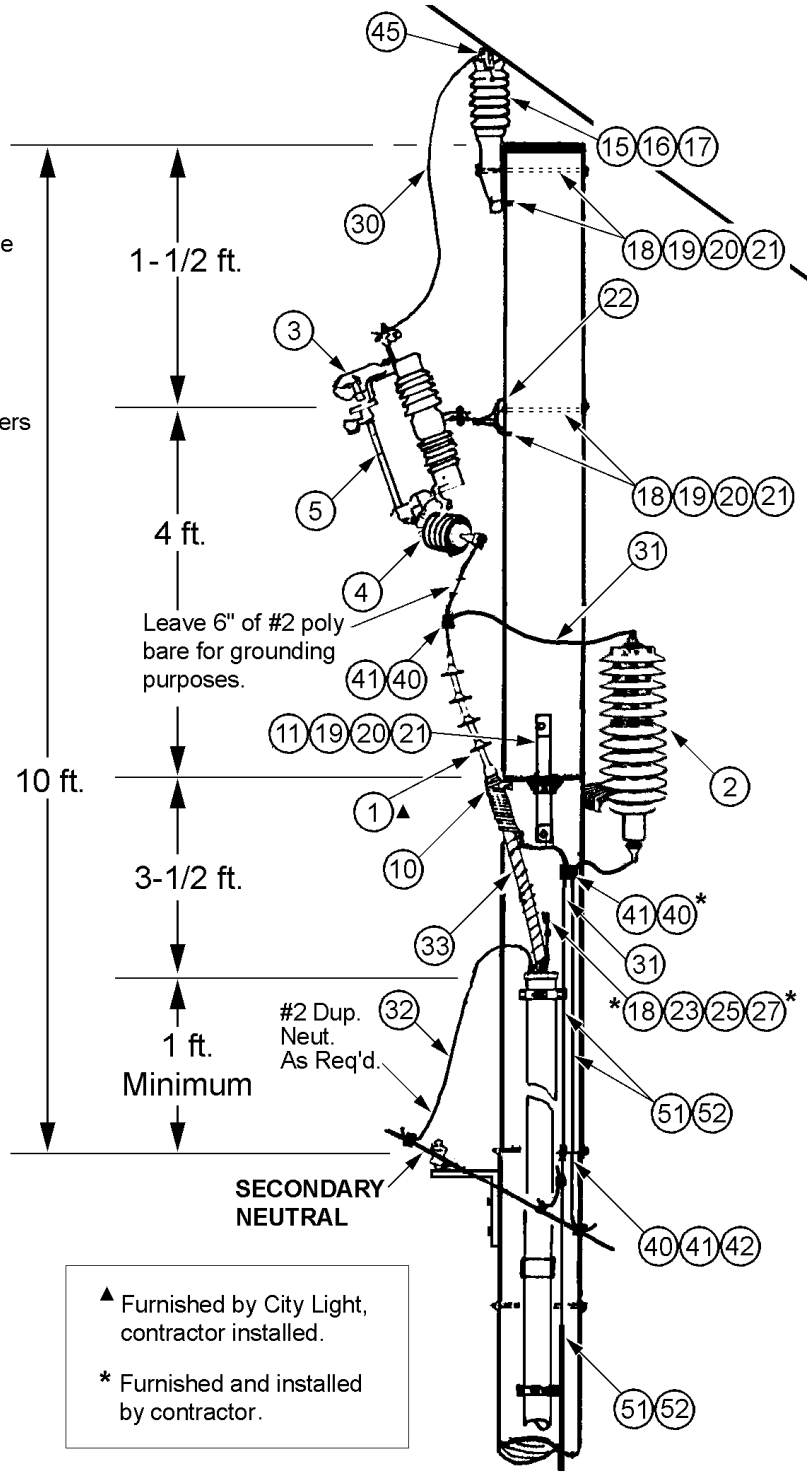

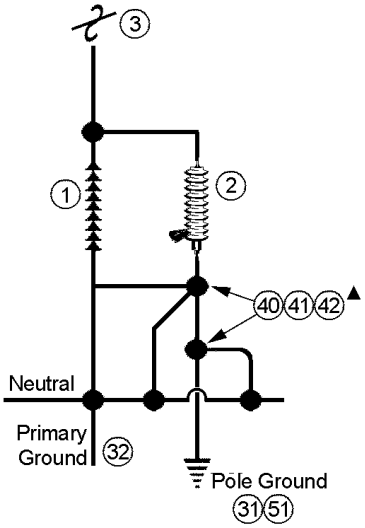

GROUNDING SCHEMATIC

Molding should cover grounds between secondary neutral and terminator bracket.

▲ Furnished by City Light, contractor installed.

* Furnished and installed by contractor.

POLE GROUND CONTINUOUS TO ARRESTER

STANDARDS COORDINATOR	STANDARDS SUPERVISOR	UNIT DIRECTOR

Material List

Item	Quantity	Description	Stock No.
		Terminator, 27kV	
1	1	Cold Shrink #1/0 1/C	686532
		Pigtail Connector #1/0	686056
2	1	Arrester, Metal Oxide, 17 kV MCOV	680115
3	1	Cutout, 27kV, 100A, Ultra HD	682099
4	1	Primary Fault Limiter Per Guideline DU11-1	–
5	1	Expulsion Fuse Per Guideline DU11-1	–
10	1	Bracket, Terminator Support	563221
11	1	Bracket, Terminator Arrester	686830
15	1	Insulator, Line Post	690157
16	1	Bracket, Insulator, Pole Top	563253
17	1	Stud, Insulator, Short	696826E
18	3	Screw, Lag, Galvanized	785261E
19	4	Bolt, Galvanized, Machine, 5/8” XL	780840E to 780840E
20	4	Washer, Flat, 2-1/4” x 2-1/4”	585135E
21	4	Washer, Locking, Coil Spring, 3/4”	584267E
22	1	Bracket, Cutout Mounting	563222
23	1	Bracket and J-Bolt, Cable Grip Support	780127
25	1	Grip, Cable Support, Single Eye, 1” – 1-1/4”	763551
27	1	Washer, Round, Galvanized, 1/2”	585025E
30	4 ft.	#4 Cu, Bare, Solid	610208
31	30 ft.	#2 Cu, Poly, Solid	611390
32	As Req'd	#2 Cu, XLP, Poly	613730
33	As Req'd	#1/0 XLP, 2/C, 27kV	602025
		Connector, Copper to Copper, Crimpet	
40	0 to 5	#4 to #4	677323E
		#2 to #2	677326E
41	3 to 8	Connector, Split Bolt, #2 - #14 to #2 - #14	668867E
		Connector, Aluminum to Copper	
42	0 or 2	#4 Cu to 1/0 Al PAC (2 Bolts)	652020E
		AMPACT (See Guideline D14-4 for sizes and range.)	651090 to 651109
		Clamp, Hot Line	
45	1	Al – See D14-6	–
		Cu – 2/0 - #8	580725E
		400 - #6	580727
51	16 ft.	Moulding, 1/2" x 8' Plastic	582060E
52	8	Staples 5/8" x 2-1/4" Galvanized	583200E

Quantities will vary due to: 1) Contractor **or** City Light installed, 2) New **or** existing pole ground, and 3) Copper **or** aluminum neutral.

Notes:

1. On dead-end poles, overhead line must dead-end on the same side as terminators are mounted, except where guy stub may be placed to lead guy wire away from pole horizontally.
2. Minimum clearance of jumpers shall be 12” phase-to-phase, 8" phase-to-ground.
3. When overhead secondary is aluminum, Item 42 is to be used. Copper wire from ground or neutral is to be drip looped below the aluminum neutral.
4. When contract job, contractor connects terminator (with pigtail) to arrester. City Light installs wire from limiter and connects to pigtail at arrester.
5. For fault limiter placement, see Guideline D11-2.

References:

U7-10.2 Primary Conduit Riser Pole Base Detail
U7-10.9 Grounding Conduit Risers on Poles
D16-2 Grounding Rod Installation
DU11-1 Fusing Schedule

POLE TERMINATION, 26 KV SINGLE PHASE UNDERGROUND SUPPLY TO OVERHEAD TRANSFORMER

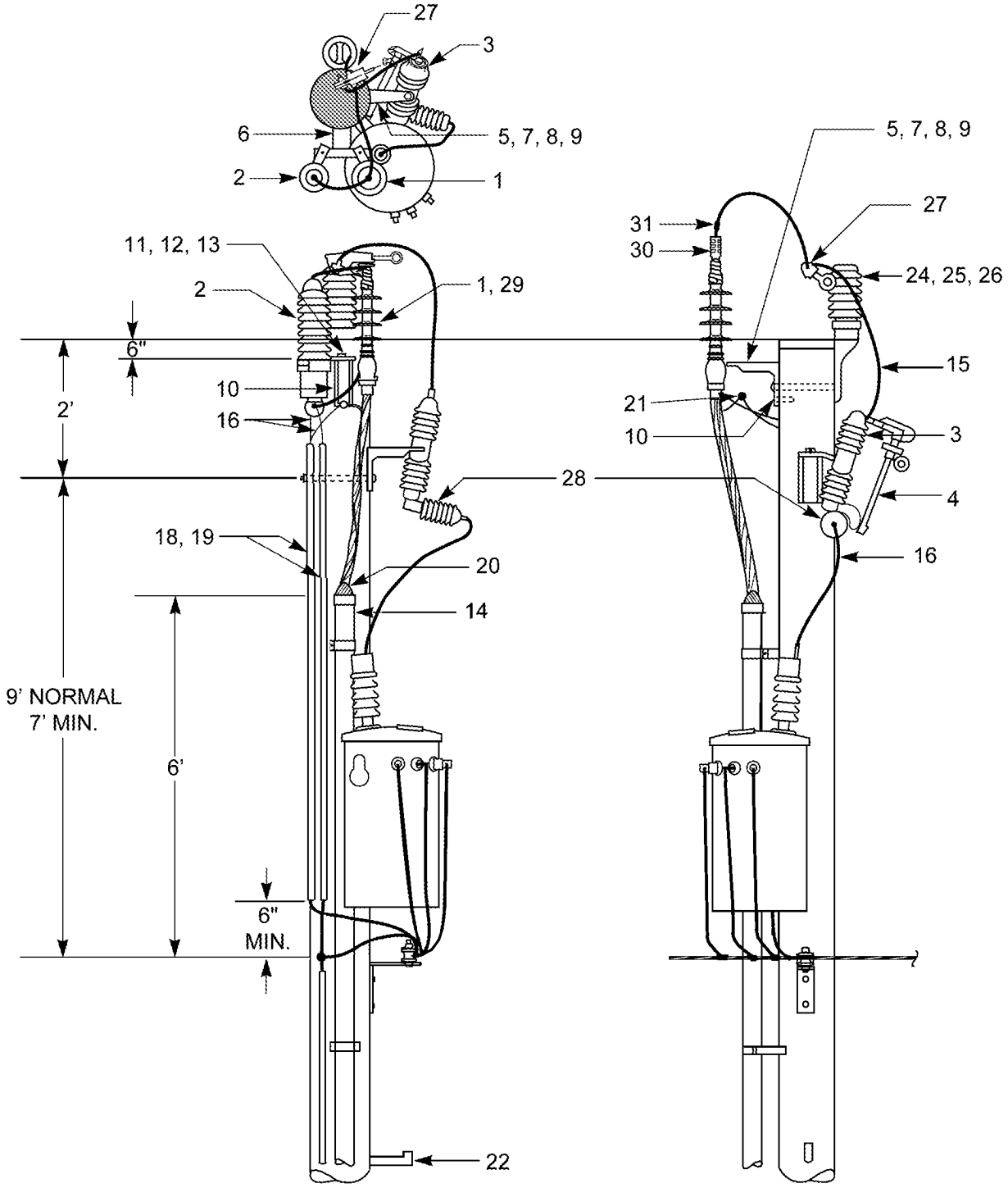

ORIGINATOR	STANDARDS COORDINATOR	STANDARDS SUPERVISOR	UNIT DIRECTOR
Jim S. Horn	Charles L. Shaffer	John C. Skinner	Betty Robin

POLE TERMINATION, 26 kV SINGLE PHASE UNDERGROUND SUPPLY TO OVERHEAD TRANSFORMER

MATERIAL LIST

ITEM	QUANTITY	DESCRIPTION	STOCK NO.
1	1	TERMINATOR, 27 kV, 1/0 Sol., cold shrink	686532
2	1	ARRESTER, SURGE, 17 kV MCOV, intermediate	680121
3	1	CUTOUT, 27 kV, ultra heavy duty	682099
4	1	FUSE link, K rated	per DU11-1
5	1	BRACKET, cutout mounting, pole	563222
6	1	BRACKET, arrester & terminator adapter	720638
7	2	BOLT, machine, galv, 5/8” x L	780838E thru 780846E
8	2	WASHER, flat, 2-1/4” X 2-1/4”	585135E
9	2	WASHER, coil spring lock, 3/4”	584267E
10	2	SCREW, LAG, 3/8” x 4”	785246E
11	2	SCREW, CAP, hex head, 5/8” x 2”	784889E
12	1	NUT, EYE, galv, 5/8:	565252E
13	1	WASHER, lock, galv, 5/8”	584260E
14	as req’d.	CONDUIT, PVC, Sked 40	734531
15	as req’d.	WIRE, #4 Cu. Sol. bare, soft drawn	610208
16	as req’d.	WIRE, #4 Cu. Sol. poly insul., soft drawn	611442
17	as req’d.	WIRE, braid, tinned Cu.	618624
18	as req’d.	MOULDING, plastic, 1/2”x 8’	582060E
19	as req’d.	STAPLES, moulding, 1/2” x 2”	583200E
20	as req’d.	COMPOUND, sealing	726294E
21	1	CONNECTOR, grounding, split bolt #1 AWG	668867E
24	1	INSULATOR, line post, 34.5 kV	690157
25	1	STUD, insulator, short, 1-3/4” x 3/4”	696826E
26	1	BRACKET, pole top	563253
27	1	CLAMP, hotline, copper 2/0 to #8	580725E
28	1	FAULT LIMITER	per DU11-1
29	1	BRACKET, termination support	563221
30	1	CONNECTOR, Compression, Pin Terminal, 1/0 S.	686056
31	1	CONNECTOR, Copper “C”, #2 to #4	677325E

NOTES:

(A) See Construction Guidelines U7-10 and U7-10.2 for conduit installation.

(B) See Construction Guideline U7-10.9 for conduit grounding and Construction Guideline D16-2 and for pole grounding.

(C) All equipment grounds shall be #4 Cu. polyethylene insulated, stock No. 611442.

(D) See Construction Guidelines DU11-1 for fusing schedule.

POLE TERMINATION, 26 kV SINGLE PHASE UNDERGROUND SUPPLY TO OVERHEAD TRANSFORMER

Grounding Diagram

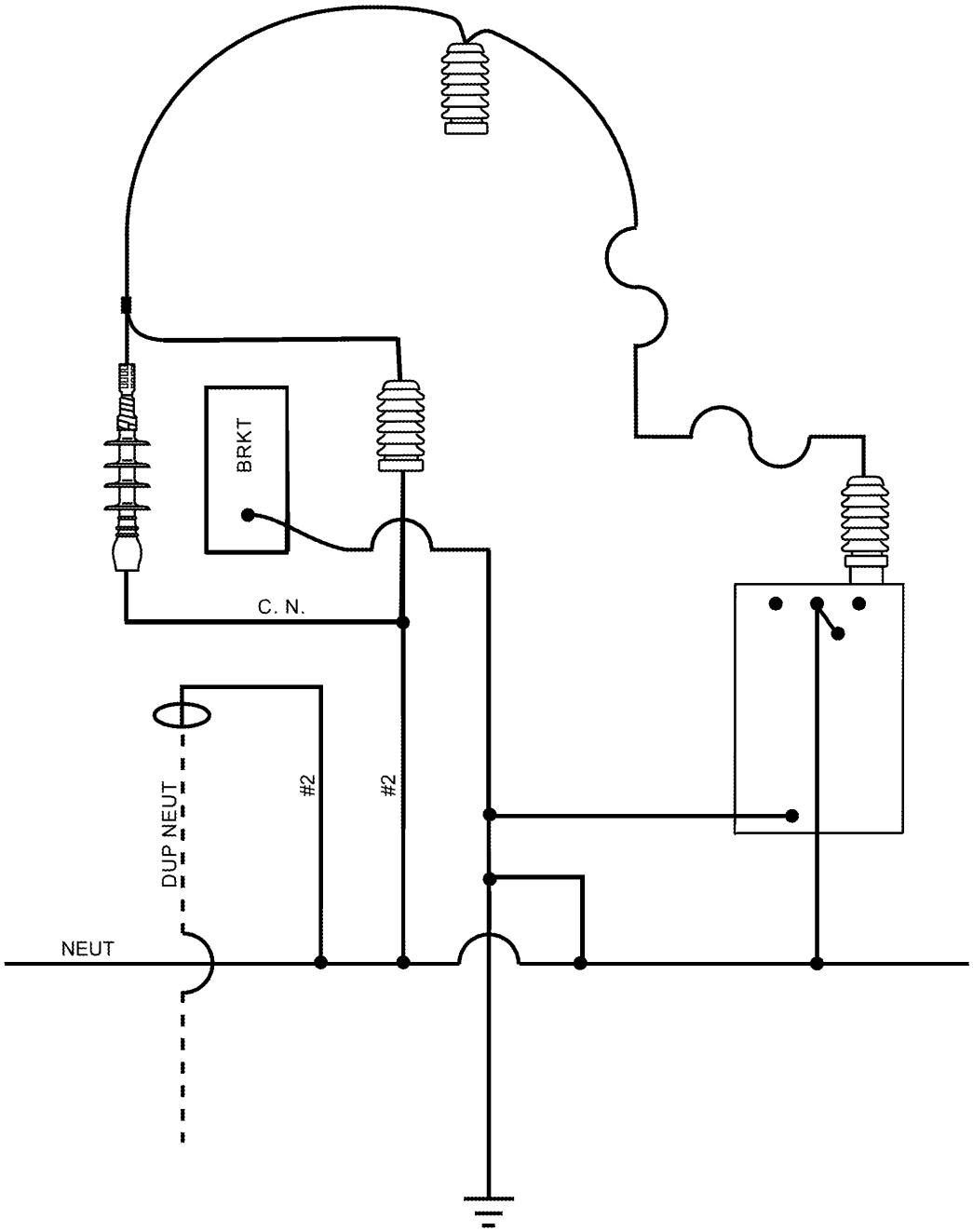

15/26 KV DISTRIBUTION 3 PHASE TRANSFORMER INSTALLATION CLUSTER MOUNTED, POLE TOP

25564 ground y/14760 to 4160 ground y/2400

Application:

For overhead 26 kV to underground 4 kV conversion bank or for 4kV customer service. For installations of 250 kVA transformers, a structural analysis shall be performed to insure compliance with NESC, section 26.

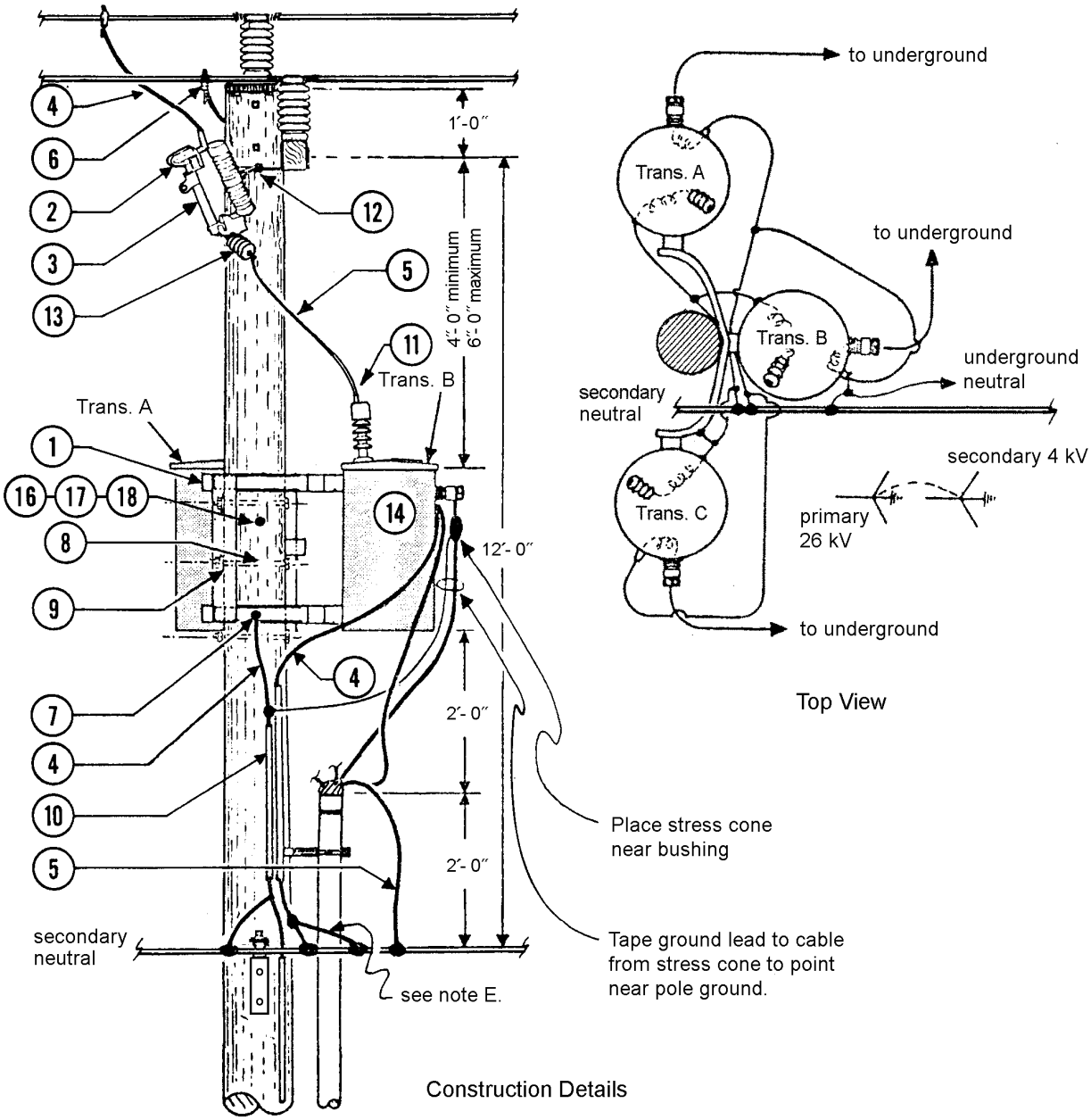

STANDARDS COORDINATOR	STANDARDS SUPERVISOR	UNIT DIRECTOR
Uzma Siddiqi	John Barnett	Richard Kent

Material List

Item	Quantity	Description		Stock Number
1	1	BRACKET, transformer cluster mount for up to 7500 lbs.		563294
2	3	CUTOUT , 27kV, 100 Amp, ultra heavy duty		682099
3	3	FUSE LINK, K rated, per DU11-1	3	683706E
			6K	683708E
			10K	683710E
			15K	683711E
			25K	683713E
4	40´	WIRE, #4 Cu solid bare, soft drawn		610208
5	40´	WIRE, #4 Cu solid poly insulated, soft drawn		611442
6	3	CLAMP, hotline, copper	#8 to 2/0	676102
7	1	CONNECTOR, tap lug	#4 to #4	677323E
			#2 to #2	677326E
8	2	BOLT, machine, zinc coated 3/4˝ x L	12 in. L	780875E
			14 in. L	780876E
			16 in. L	780877E
			18 in. L	780878E
			20 in. L	780879E
			22 in. L	780880E
9	2	WASHER, flat, 3˝ x 3˝		584947E
10	32´	MOLDING, plastic, 1/2˝x 8’		582060E
11	3	BIRD GUARD		580776
12	3	BRACKET, cutout mounting, crossarm		682097
13	2	FUSE, Fault Limiter, per DU11-1	˝A˝	684900
			˝B˝	684902
			12K	684920
14	3	TRANSFORMER, Overhead		as required
15	12	STAPLES, moulding, 1/2˝ x 2˝		583200E
16	1	BOLT, machine, zinc coated, 5/8˝ x L	12 in. L	780845E
			14 in. L	780846E
			16 in. L	780847E
			18 in. L	780848E
			20 in. L	780849E
17	2	WASHER, curved square, zinc coated, 4˝ x 4˝		584775E
18	1	WASHER, double coil lock		584261E

Notes:

A. Install “HIGH VOLTAGE” sign on pole.

B. Install Scotchlite™ “DANGER” sign, Stock No. 765195 on bottom of transformer.

C. See Construction Guideline U7-10.9 for conduit grounding & D16-2 for pole grounding.

D. All equipment grounds shall be #4 copper polyethylene insulated.

E. Install double connection from underground neutral to overhead neutral (same wire size).

F. See Construction Guideline DU11-1 for fusing schedule.

G. For all transformer banks, use a bolt (item 16) to prevent pole splitting.

15/26 KV DISTRIBUTION SINGLE PHASE STEP DOWN TO 2400 VOLT

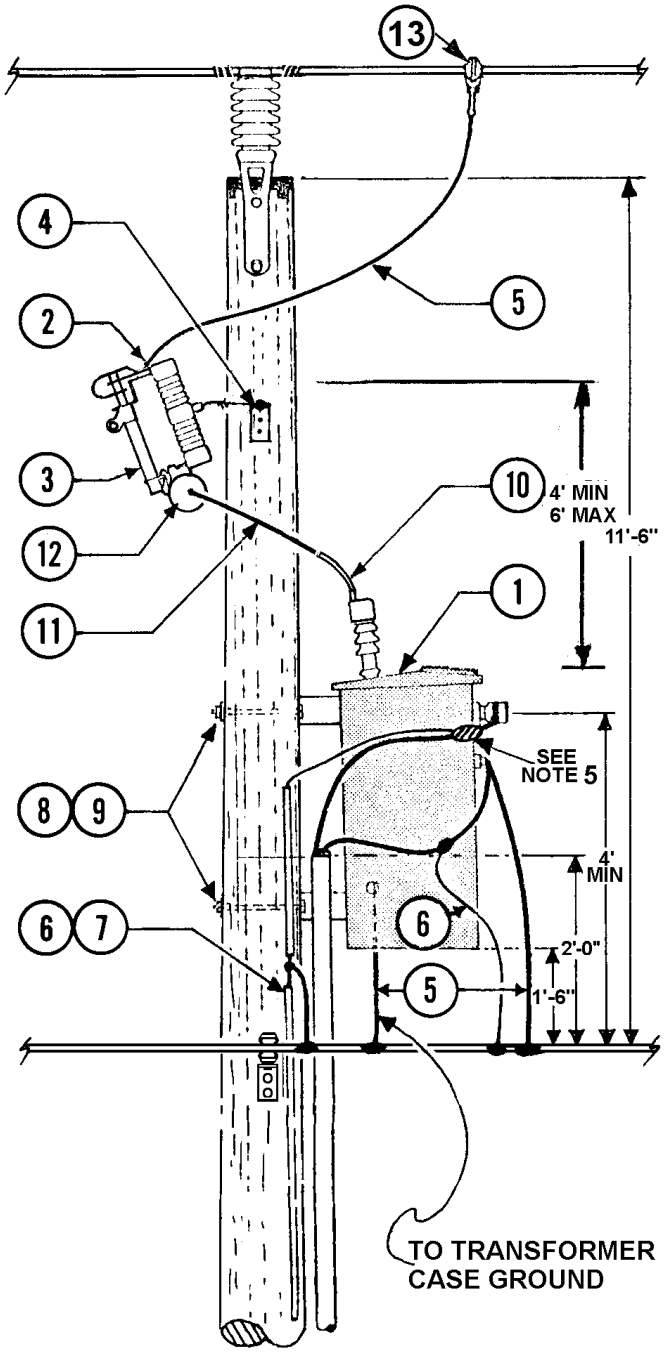

MATERIAL LIST

ITEM	QTY	DESCRIPTION	STOCK NO.
1	1	Transformer 25564 Grd. Y/14760 to 4160 Grd. Y/2400, size as specified	355922 to 355948
2	1	Cutout, 27 kV, 100 A	682099
3	1	Fuse, link, size as specified	683710E to 683724E
4	1	Bracket, cutout mounting	563222
5	10'	Wire, #4, SD bare sol.	610208
6	20'	Wire, #4, polyethylene	611442
7	2 pc.	Moulding,1/2", plastic	582060E
8	3	Bolt, galv, machine, 5/8" x L	780845E to 781046E
9	3	Washer, galv, 3 x 3 x 3/16"	584947E
10	1	Guard, bird	580776
11	10'	Wire, #4, SD, poly sol.	611442E
12	1	27/15 kV fault limiter, per Guideline DU11-1	----
13	1	Clamp, hot line, per Guideline D14-6	----

NOTES:

1. Install red Scotchlight™ "DANGER" decal on bottom of transformer. (Paint Shop will furnish and install.) Stock No. 765195
2. Install 7" x 10" "DANGER HIGH VOLTAGE" plastic Sign on climbing side of pole at transformer level. Stock No. 765181.
3. On transformers with 2 secondary bushings, close the second bushing to the customer's neutral and to the secondary neutral.
4. See Construction Guideline U7-10.9 for conduit grounding and D16-2 for pole grounding.
5. Position stress cone near bushing. Tape ground lead to cable from stress cone to point near pole ground.
6. See Construction Guideline DU11-1 for fusing schedule.

ORIGINATOR	STANDARDS COORDINATOR	STANDARDS SUPERVISOR	UNIT DIRECTOR
Jim S. Horn	Charles L. Shaffer	John E. Skinner	Betty Robin

FUSING SCHEDULE

Table 1 - Distribution

Transformer Size, kVA			Transformer Size or Tap Total, kVA			Fuse Link		Fault Limiter (26/15 kV Only)	
2400 V 1Ø	4160V 1Ø	4160V 3Ø Bank Size, kVA	15 kV 1Ø	26 kV Open Wye-Open Delta (Transformer Size, kVA)	26 kV Wye Primary (Bank Size, kVA)	Fuse Rating, Amperes	Stock No.	Size	Stock No.
5	–	–	15 thru 25	–	–	3	683706E	12K*	684920
–	–	–	–	15 thru 25	45 thru 75	3	683706E	A*	684900
7-1/2, 10	–	–	37-1/2 thru 50	–	–	6 K	683708E	12K*	684920
–	–	–	–	37-1/2 thru 50	112-1/2 thru 150	6 K	683708E	A*	684900
15	25	–	75 thru 100	–	–	10 K	683710E	12K*	684920
–	–	–	–	75 thru 100	225 thru 300	10 K	683710E	A*	684900
25	37-1/2 & 50	75	167	167	500	15 K	683711E	B	684902
37-1/2	75	112-1/2	250	–	750	25 K	683713E	B	684902
50	100	150	–	–	1000	40 K	683715E	C	684905
75	150 & 167	225	–	–	1500	50 K	683717E	C	684905
100	–	300	–	–	2000, 2500	65 K	683718E	D	684907
150, 167	–	500	–	–	–	100 K	683724E	–	–

*Use "B" limiter if underground installation.

Table 2 – Three-Phase, 26 kV Power Transformers and Unit Substations

Bank Size kVA	Fuse Link		26/15 kV Fault Limiter	
	Fuse Rating Amperes	Stock Number	Size	Stock Number
3000	65 K	683718E	D	684907
5000, 6000	200 E	684737	For SMD-20	
7500	250 E	684711	For SM-5	
10,000	300 E	684714	For SM-5	

Table 3 – Padmount Switchgear

Total Transformer kVA	Full Range Fuse Size	Stock Number
0-750	25X	685006
1000	40X	685008
1500-2500	65X	685010

STANDARDS COORDINATOR	STANDARDS SUPERVISOR	UNIT DIRECTOR
Charley L. Shaffer	John G. Skinner	Hardev Juj

Table 4 – Underground and Pad Mount Transformers, 1Ø and 3Ø

1Ø Transformer kVA, 2.4 kV	1Ø Transformer kVA, 15.25 kV	3Ø PM Transformer kVA, 26.4 kV	RTE Bayonet	Bayonet Fuse Amps	Stock Number	Older** NX Type
25	–	–	358C12	50	685105	–
50	–	–	358C14	65	685106	–
–	25	–	358C05*	8	685101	FA4H6
–	50	–	358C08*	15	685102	FA4H10
–	75	–	358C08*	15	685102	FA4H12
–	100	–	358C08*	15	685102	FA4H18
–	167	–	358C10*	25	685103	FA4H25
–	–	150	358C08*	15	685102	–
–	–	225	358C08*	15	685102	–
–	–	300	358C08*	15	685102	–
–	–	500	358C10*	25	685103	–
–	–	750	–	–	–	FA4H35
–	–	1000	–	–	–	FA4H40
–	–	1500	–	–	–	2–FA4H35
–	–	2000	–	–	–	2–FA4H40
–	–	2500	–	–	–	2–FA4H40

* The RTE Bayonet is limited to 2,000 amps interrupting capability at 15 kV. A “B” limiter must be used in series with these bayonets. It is located either on the terminal pole or in a vault adjacent to a pad mount switch.

** NX type full range current limiting fuses are carried in spare parts.

Table 5 – Capacitor Banks

	Fuse Link			Fault Limiter (26/15 kV Only)	
Capacitor Rating	Type Fuse Holder	Fuse Rating, Amperes	Stock Number	Size	Stock Number
4 kV 60 KVAR Fixed - 1Ø	100 A Enclosed C/O	25 K	683713E	none	-
4 kV 300 KVAR - 3Ø	100 A Enclosed C/O	40 K	683715E	none	-
4 kV 450 KVAR Switched - 3Ø	100 A Enclosed C/O	65 K	683718E	none	-
26 kV 1200 KVAR - 3Ø Grounded Y	27 kV Open C/O	40 K	683715E	C	684905
26 kV 1200 KVAR - 3Ø Floating Y	27 kV Open C/O	25 K	683713E	B	684902

Notes

A. "K" rated fuses have an interrupting capability of 16,000 amperes when used with 100-ampere, 27-kV cutout (Stock No. 682099) on the 26-kV system. If there is a question about available fault current or fuse suitability, contact design engineer.

B. "E" rated fuses for power transformers have an interrupting capability of 20,000 amperes when used on the 26-kV system with the following cut-out or mounting:

- 125E, 150E, & 200E fit in 27-kV SMD-20 type cutout Stk. No. 682580.
- 250E & 300E fit in SM-5 type mountings Stk. Nos. 682847 and 682871.
- See DU11-1.1.

C. Refer to D11-2 for limiter installation.

FUSE HOLDING DEVICES & FUSES

ILLUSTRATION	Device Description	FUSE LINK	APPLICATION
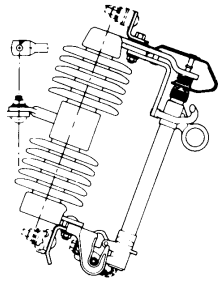	CUTOUT, 100A, 27 kV heavy duty, 16,000 A interrupting Stock No. 682099	3T 6K 10K 15K 25K 40K 65K 100K	Below its 16kA interrupting rating: 26kV pole mount transformers, with a limiter. 26kV UG Term. Poles up to 2500 kVA, w/ limiter. 26kV pole mount capacitors, with a limiter. See Du 11-1 for proper size limiter to be used with a given K link. Most taps from 26kV OH feeder more than one mile from substation. Generally without a limiter.
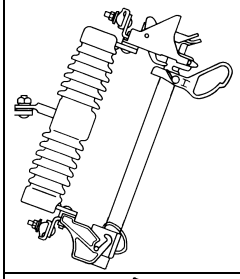	CUTOUT, 200A, 27 kV, SMD-20, 20,000 A interrupting Stock No. 682580	15E 30E 50E 125E 150E 25K 50K 65K 100K	Due to its higher ampacity & interrupting rating; Some older pole type tfmrs within 1 mile of substa. Feeder taps especially close to substa. Industrial subs or large loads. Large UG feeds. Sometimes used with a limiter in series.
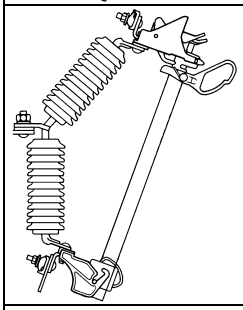	CUTOUT, 200A, 38 kV, SMD-20, 16,000 A interrupting Stock No. 684358	65Q 80Q	Large UG feeds Uses only Q fuses Q fuses fit only this cutout. Sometimes has S&C or KPF switch or solid blade C.O. ahead. Never used with any other limiter in series.
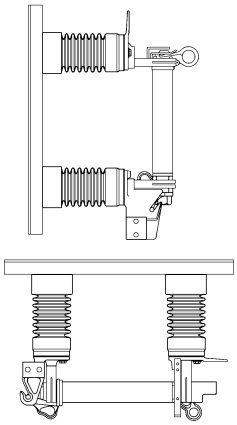	CUTOUT, 300A, 38Kv, SM-5, 28,000 A interrupting VERTICAL MOUNT, Stock No. 682871 HORIZONTAL MOUNT, Stock No. 682847	125E 250E 300E	26 to 4kv unit substations. Industrial substations. Very large UG feeds. May have S&C or KPF switch ahead Never used with a limiter in series.
	Device	**FUSE**	

ORIGINATOR	STANDARDS COORDINATOR	STANDARDS SUPERVISOR	UNIT DIRECTOR
Jim S. Horn	Charles L. Shaffer	John C. Skinner	Betty Robin

ILLUSTRATION	Description	LINK	APPLICATION
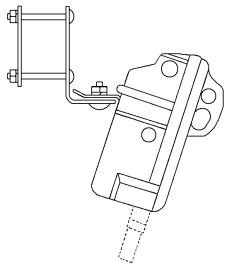	CUTOUT, 100A, 4 kV heavy duty, 8,000 A interrupting @ 2.4 kV. Stock No. 682047	6K 10K 15K 25K 40K 65K 100K	4kV pole mount transformers Never used with a limiter in series
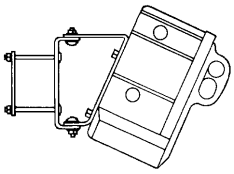	CUTOUT, 200A, 4 kV extra heavy duty, 20,000 A interrupting @ 2.4 kV. Stock No. 682087	6K 10K 15K 25K 40K 65K 100K 140K 200K	4kV feeder taps or large 4kV UG feeds. Never used with a limiter in series

ILLUSTRATION	Device Description	27 kV SMU-20 E speed	27 kV SMU-20 K speed	35 kV SM-5 K speed	27 Kv back up current limiter	27 kV Full Range current limiter. May be in series with other	APPLICATION
  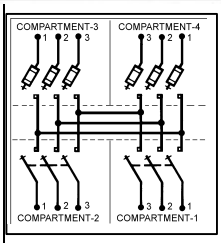	SWITCH, Pad Mount 600 A solid blade & 200 A fuse 12,500 A interrupting PMH-9, 2-600, 2-SML20 fuse Stock No. 250190 PMH-12, 1-600, 3-SML20 fuse Stock No. 250191 PMH-5, 1-600, 1- Electronic fuse Stock No. 250195	15E 30E 50E 125E 150E 200E	25K 50K 65K 100K	300E (Boeing only)	very rare (35th NE & NE 77th only)	Full Range Size Stock # 25 685006 40 685008 65 685010 Electronic, 32 ranges, see Stock Cat. 20-1	Major UG systems: Large load UG feed customer. Uses “E” or “K” full range current limiting or electronic fuses. May have submersible limiter (in below grade vault) in series with “E” or “K” fuse.

SEATTLE CITY LIGHT

CONSTRUCTION GUIDELINE

STANDARD NUMBER: **DU11-4**

PAGE: 1 of 2
SUPERSEDING: October 6, 2006
EFFECTIVE DATE: April 20, 2007

CABLE LIMITERS - DISTRIBUTION

Cable limiters are to be installed when the available fault current exceeds the interrupting rating of the customer's service equipment. Generally, residential, light industrial, and light commercial service equipment is rated at 10,000 amperes.

The following is a guideline based on typical transformer impedances and typical wire sizes. If the installation approaches the limits of these guidelines or the customer has higher rated equipment, fault calculations must be made.

Note: Cable Limiters will not be installed on new services.
New Service panels are rated for the available fault duty.

1. Overhead - Alternate Locations for Cable Limiters

Service Voltage	Transformer Size, KVA	Limiters required if length of run in feet is LESS than:
120/240	50 or less	none required
	75	50
	100	100
	167	250
120/208	3 x 25 or less	none required
or	3 x 37-1/2	75
138/240	3 x 50	100
3Ø-4W	3 x 75 and above	all locations
277/480	3 x 50 or less	none required
3Ø-4W	3 x 75	50
	3 x 100 and above	all locations

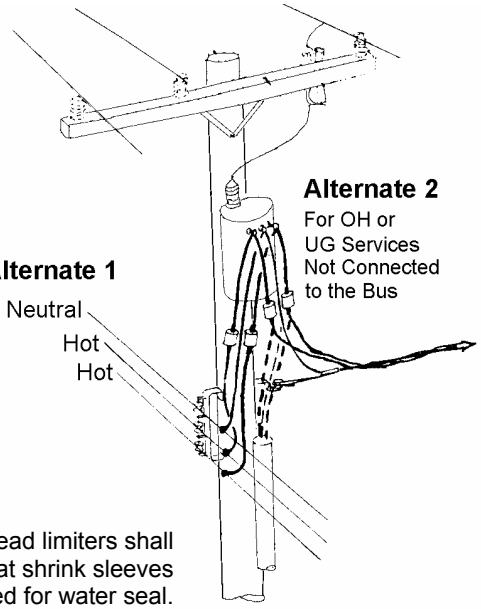

All overhead limiters shall have heat shrink sleeves applied for water seal.

2. Underground - Alternate Locations for Cable Limiters

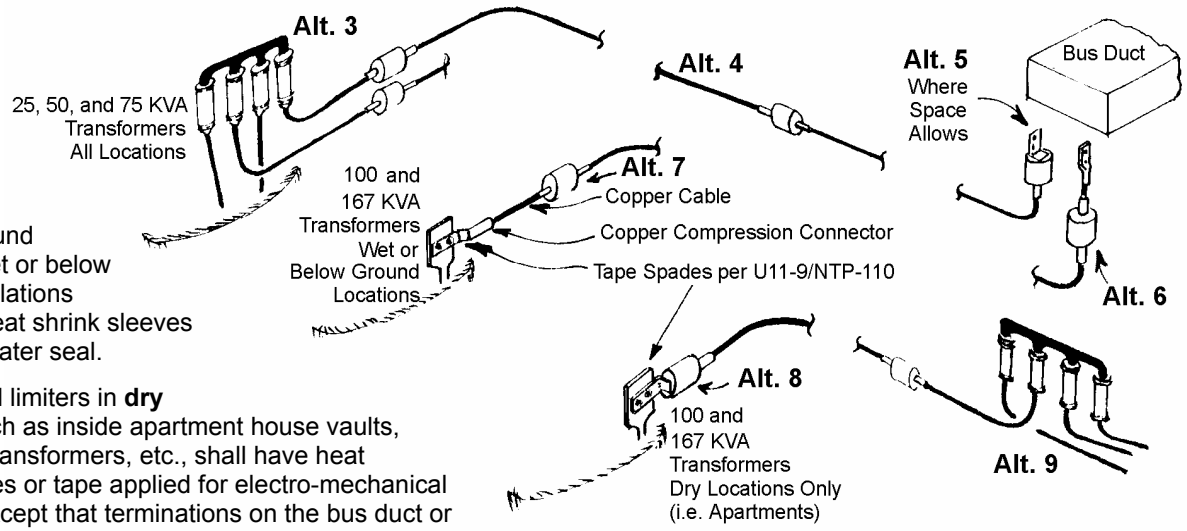

All underground limiters in wet or below ground installations shall have heat shrink sleeves applied for water seal.

Underground limiters in **dry** locations such as inside apartment house vaults, pad-mount transformers, etc., shall have heat shrink sleeves or tape applied for electro-mechanical protection except that terminations on the bus duct or the padmount terminals need not be insulated.

STANDARDS COORDINATOR	STANDARDS SUPERVISOR	UNIT DIRECTOR
Chris Detter	John Barnett	John Nierenberg

3. Limiters, Cable to Cable, Al to Al or Cu to Cu

Wire Size, Al or Cu	Limiter				Heat-Shrink Tubing					
	Al to Al		Cu to Cu					ID, in.		
	Stock No.	Matl. Std.	Stock No.	Matl. Std.	Stock No.	Matl. Std.	Quantity	Min. Expanded	Max. Recovered	Length, in.
#4	–	–	683641	6836.3	737450E	7374.5	1	1.10	0.37	9
#2	–	–	683643	6836.3	737450E	7374.5	1	1.10	0.37	9
#1	–	–	–	–	737452E	7374.5	1	1.50	0.50	12
1/0	–	–	–	–	–	–	–	–	–	–
2/0	–	–	683646	6836.3	737452E	7374.5	1	1.50	0.50	12
3/0	–	–	683647	6836.3	737452E	7374.5	1	1.50	0.50	12
4/0	683615	6836.6	683648	6836.3	737452E	7374.5	2 Al:1Cu	1.50	0.50	12
250	–	–	683649	6836.3	737455E	7374.5	2	2.00	0.75	12
350	683616	6836.6	683650	6836.3	737455E	7374.5	2	2.00	0.75	12
500	683617	6836.6	683651	6836.3	737455E	7374.5	2	2.00	0.75	12
600	–	–	011159	6836.3	737456E	7374.5	2	3.00	1.25	12
750	683618	6836.6	683652	6836.3	737456E	7374.5	2	3.00	1.25	12

4. Limiters, Cable to Bus, Al and Cu

Wire Size, Al or Cu	Limiter				Heat-Shrink Tubing					
	Al to Flat		Cu to Flat					ID, in.		
	Stock No.	Matl. Std.	Stock No.	Matl. Std.	Stock No.	Matl. Std.	Quantity	Min. Expanded	Max. Recovered	Length, in.
#4	–	–	683621	6836.2	737450E	7374.5	1	1.10	0.37	9
#2	–	–	683622	6836.2	737450E	7374.5	1	1.10	0.37	9
#1	–	–	–	–	737452E	7374.5	2	1.50	0.50	12
1/0	–	–	–	–	737452E	7374.5	2	1.50	0.50	12
2/0	–	–	683623	6836.2	737452E	7374.5	2	1.50	0.50	12
3/0	–	–	683624	6836.2	737452E	7374.5	2	1.50	0.50	12
4/0	683637	6836.50	683625	6836.2	737452E	7374.5	2	1.50	0.50	12
250	–	–	683626	6836.2	737455E	7374.5	2	2.00	0.75	12
350	683638	6836.50	683627	6836.2	737455E	7374.5	2	2.00	0.75	12
500	683639	6836.50	683629	6836.2	737455E	7374.5	2	2.00	0.75	12
600	–	–	011158	6836.2	737456E	7374.5	2	3.00	1.25	12
750	683659	6836.50	683630	6836.2	737456E	7374.5	2	3.00	1.25	12

METER BASE ARRANGEMENTS

Notes:

1. When nonmetallic conduit is used between C.T. can and meter socket, add 1 #12 or larger solid green wire for ground. Applies to all "B" Figures.
2. When neutral is insulated, it shall be bonded to the socket. All sockets shall be U.L. listed. Applies to all Figures.
3. Circuit closing devices are **not approved**. Applies to all Figures.
4. All 480V services 200 amps or less require a 200 amp continuous duty safety socket.
5. All commercial services 200 amps or less and under 300 volts require a continuous duty block bypass socket.
6. All Delta services (240/120V or 480/240V 3 phase 4 wire) up to 200 amps shall have the high leg on the right hand jaws of the 7-terminal meter socket. Applies to Figure 6A.
7. All residential 120/208V single phase services up to 400 amps shall have the 5th terminal at the 9 o'clock position, and wired to the neutral in the meter socket. Applies to Figure 2A.
8. All commercial 120/208V single phase services up to 200 amps shall have the 5th terminal at the 9 o'clock position, and wired to the neutral in the meter socket. Applies to Figure 5A.
9. All EUSERC requirements refer to the latest revisions of EUSERC documents. Typical EUSERC drawing number 339
10. C.T. secondary wire sizes increase for 50 feet and greater.
11. Block bypass sockets are recommended for all residential use.

Types of Service	Residential Metering Requirements	
	Maximum Metering Capacity Up to 400 Amp	Metering Capacity Over 400 Amp
1 Ø 3W 120/240V ***EUSERC Compliance*** Fig. 1A EUSERC Dwg. F-1 Code 4 with EUSERC Dwg. 302A (up to 225 amps) or 302B (over 225 amps and up to 400 amps). Fig. 1B EUSERC Dwg. F-1 Code 6 with EUSERC Dwg. 339 (over 400 amps).	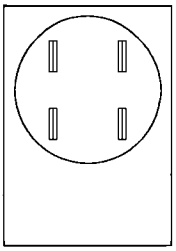 Up to 225 Amps 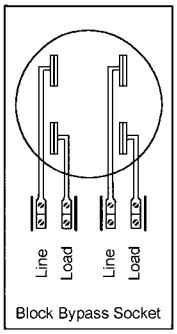 320 Amp Class 302A Fig. 1A 302B	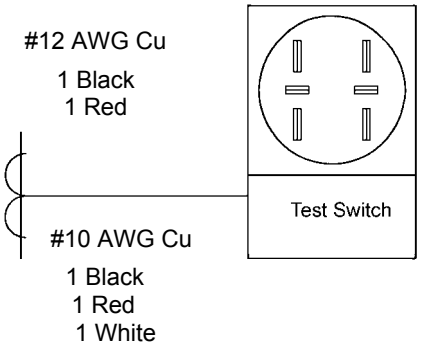 339 Fig. 1B
1 Ø 3W 120/208V ***EUSERC Compliance*** Fig. 2A EUSERC Dwg. F-1 Code 5A with EUSERC Dwg. 302A (up to 225 amps) or 302B (over 225 amps and up to 400 amps). Fig. 2B EUSERC Dwg. F-1 Code 8 (Code 15 Alternate) with EUSERC Dwg. 339 (over 400 amps).	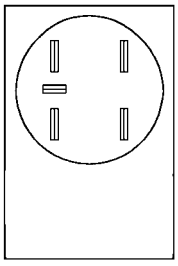 Up to 225 Amps 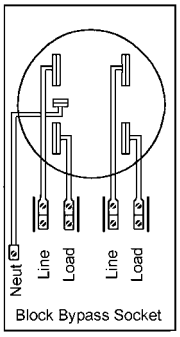 320 Amp Class 302A Fig. 2A 302B	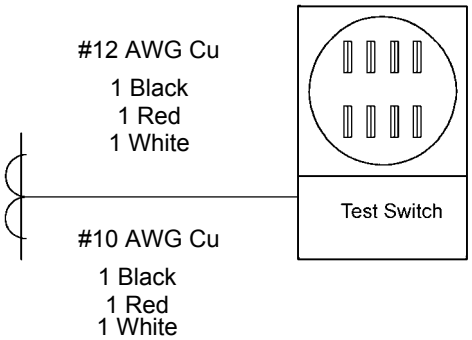 339 Fig. 2B

ORIGINATOR	STANDARDS COORDINATOR	STANDARDS SUPERVISOR	UNIT DIRECTOR
Ted Allestad	Charles L. Shaffer	John Skimmer	Harold Jy

Commercial Metering Requirements

Types of Service	Maximum Metering Capacity Up to 200 Amp	Metering Capacity Over 200 Amp
1 Ø 2W 120V **1 Ø 2W 277V** ***EUSERC Compliance*** Fig.3A EUSERC Dwg. F-1 Code 4 with EUSERC Dwg. 302B (up to 200 amps and 120 V) or Dwg. 305 (up to 200 amps and 277 V or higher). Fig. 3B EUSERC Dwg. F-1 Code 5A with EUSERC Dwg. 339 (over 200 amps).	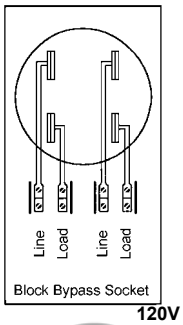 **120V** 302B **Fig. 3A** 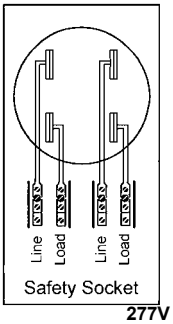 **277V** 305	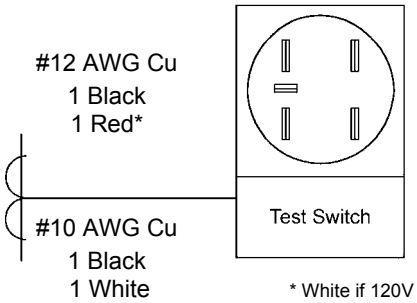 **Fig. 3B** 339
1 Ø 3W 120/240V **1 Ø 3W 240/480V** ***EUSERC Compliance*** Fig.4A EUSERC Dwg. F-1 Code 4 with EUSERC Dwg. 305 (up to 200 amps). Fig. 4B EUSERC Dwg. F-1 Code 6 with EUSERC Dwg. 339 (over 200 amps).	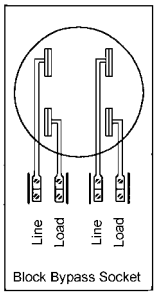 **120/240V** 302B **Fig. 4A** 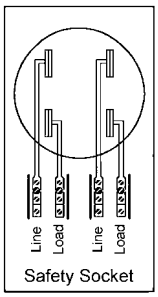 **240/480V** 305	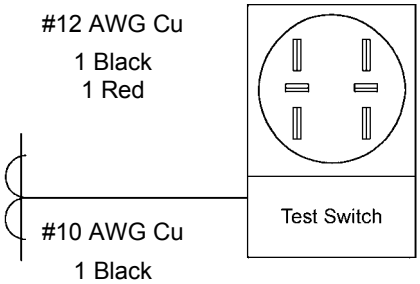 339 **Fig. 4B**
1 Ø 3W 120/208V **1 Ø 3W 277/480V** ***EUSERC Compliance*** Fig.5A EUSERC Dwg. F-1 Code 5A with EUSERC Dwg. 305 (up to 200 amps). Fig. 5B EUSERC Dwg. F-1 Code 8 (Code 15 Alternate) with EUSERC Dwg. 339 (over 200 amps).	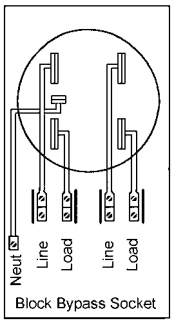 **120/208V** 302B **Fig. 5A** 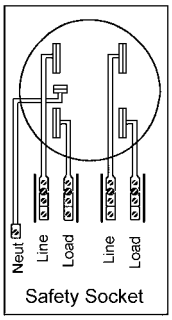 **277/480V** 305	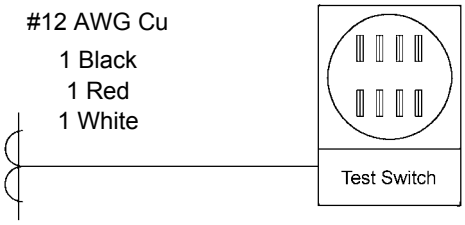 339 **Fig. 5B**
3 Ø 4W 208Y/120V **3 Ø 4W 240/120V** delta **3 Ø 4W 240Y/138V** **3 Ø 4W 480Y/277V** **3 Ø 4W 480/240V** delta ***EUSERC Compliance*** Fig.6A EUSERC Dwg. F-1 Code 7 with EUSERC Dwg. 305 (up to 200 amps). Fig. 6B EUSERC Dwg. F-1 Code 13 (Code 15 Alternate) with EUSERC Dwg. 339 (over 200 amps).	**High leg on right-hand terminals if delta (orange).** 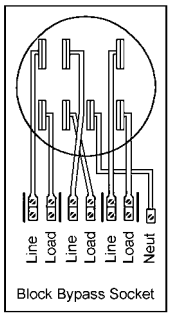 **208Y/120V, 240/120V** delta, **240Y/138V** 302B **Fig. 6A** 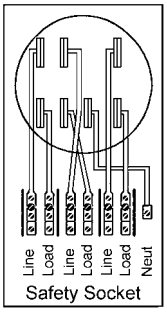 **480/277V, 480/240V** delta 305	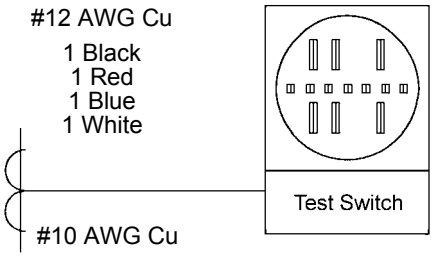 339 **Fig. 6B**

dummy tab front - E S SL

dummy tab back - E S SL

SEATTLE CITY LIGHT

CONSTRUCTION GUIDELINE

STANDARD NUMBER: **E1-4/NGE-30**

PAGE: 1 of 2
DATE: October 27, 1965
REV: February 5, 2004

PHASE RELATIONS FOR CITY LIGHT SYSTEM

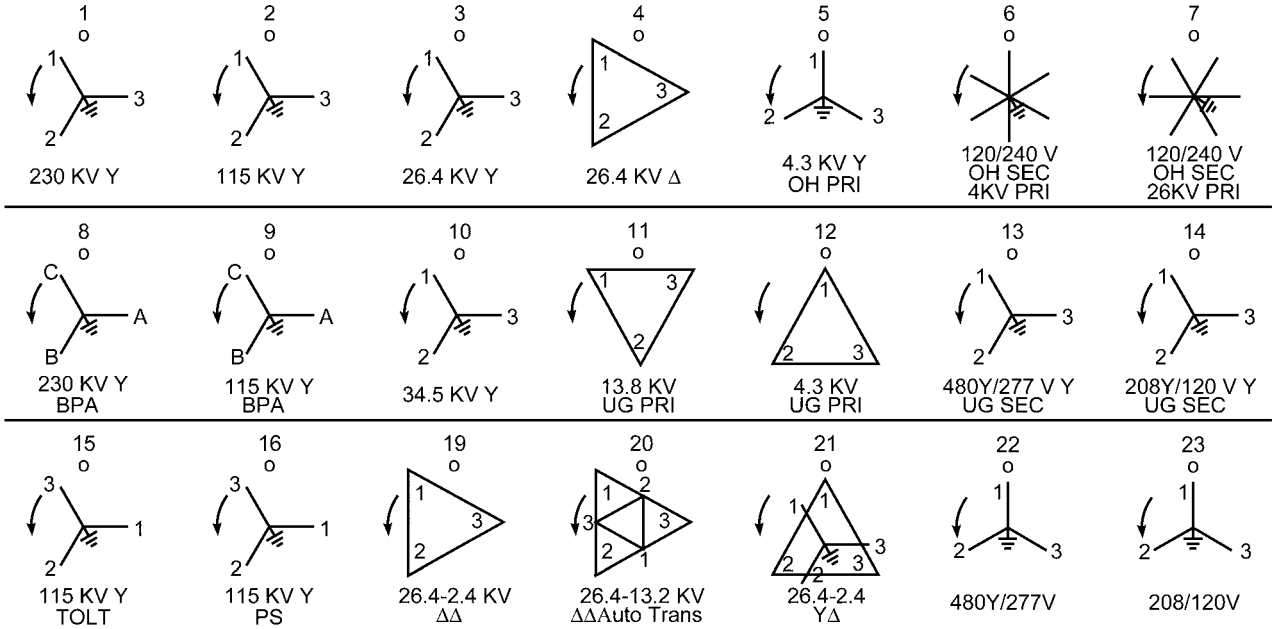

Principal Transformations

Voltage Diagrams	Nominal Supply High Voltage	Nominal Circuit Low Voltage
1-2	❖230 KV Y	115 KV Y
1-3	❖230 KV Y	26.4 KV Y
2-3	❖115 KV Y	26.4 KV Y
4-5	26.4 KV Δ	4.3 KV Y
12-14	4.3 KV Δ	208/120 V Y UG
5-6	2.4 KV1 Ø	120/240 V OH
8-16	❖230 KV Y BPA	115 KV Y PS
1-10	❖230 KV Y	34.5 KV Y
11-13	13.8 KV Δ	480Y/277 V Y UG
11-14	13.8 KV Δ	208/120 V Y
12-13	4.3 KV Δ	480/277 V Y UG
4-27	26.4 KV Δ	13.2KV Δ BOE 2
3-7	15 KV 1 Ø	120/240 V OH
4-24	26.4 KV Δ	13.8 KV Y U of W
4-28	26.4 KV Δ	13.8 KV Y
2-11	115 KV Y	13.2 KV Δ
4-22	26 KV Δ	480Y/277 V
4-23	26 KV Δ	208Y/120 V
3-13	26 KV Y	480Y/277 V
3-14	26 KV Y	208Y/120 V

Notes

1. The symbol "o" at the top of each diagram is the common point for all diagrams on this drawing.

2. Nominal voltages per Construction Guideline E1-4.1 / NGE-40 Voltage Zones.

❖ Tertiary winding required.

ORIGINATOR	STANDARDS COORDINATOR	STANDARDS SUPERVISOR	UNIT DIRECTOR
Jim S. Horn	Charles L. Shaffer	John Skinner	Hardie Frey

PHASE RELATIONS FOR CITY LIGHT SYSTEM

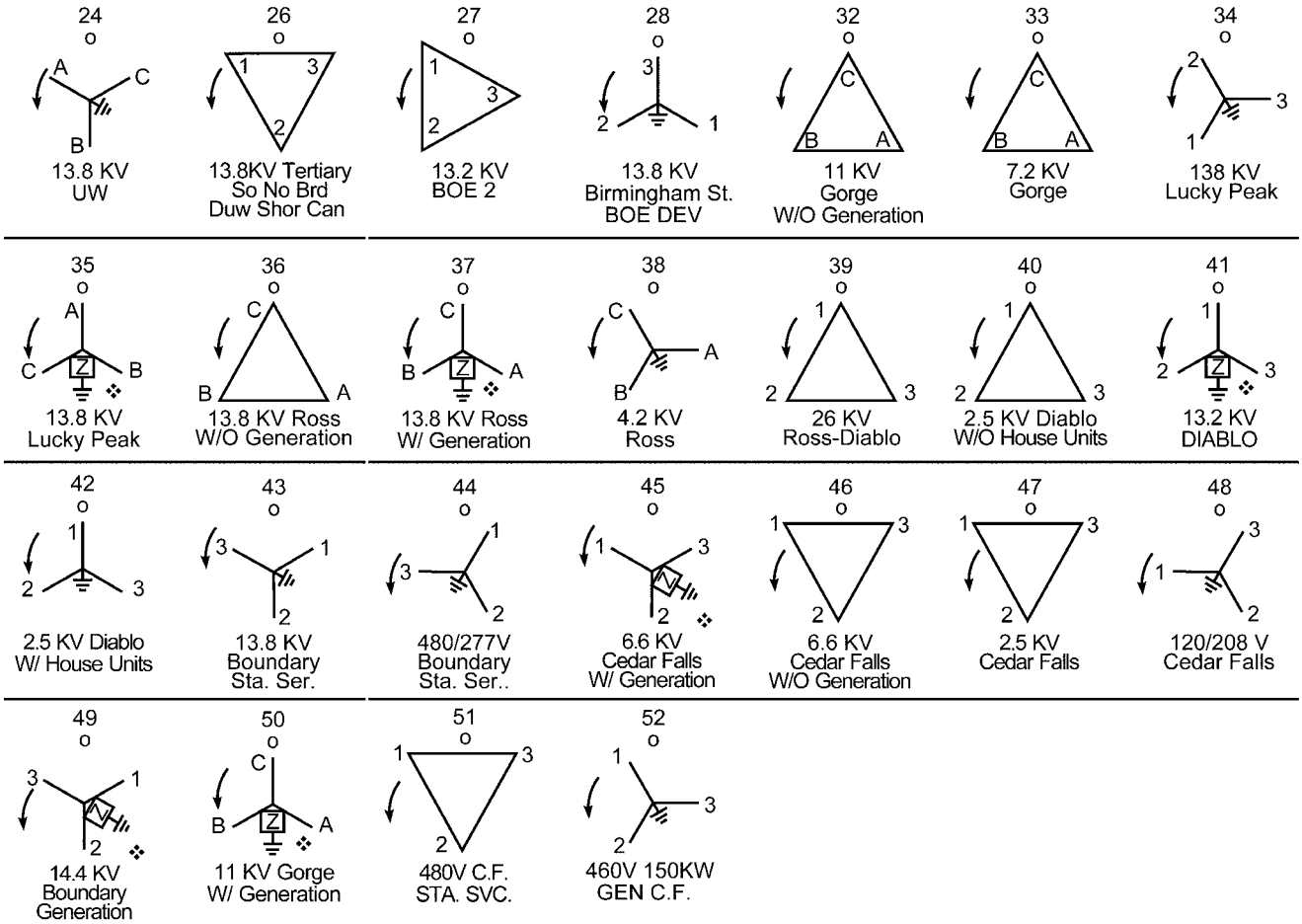

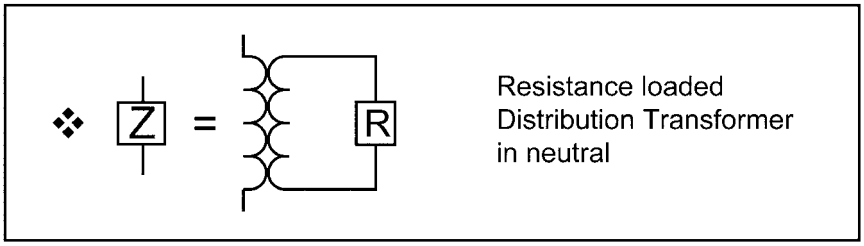

See Page 1 for Notes

VOLTAGE ZONES

Scope. This design standard establishes preferred Seattle City Light Department voltages of alternating current supply systems from generator to points of utilization.

Nominal Voltages are a common designation for all systems whose operating voltages lie within the same general voltage class. This design standard is in agreement with nominal voltages set forth in Seattle City Light Department Requirements for Electric Service Connection and the electric rates ordinance, latest revision.

Design Criteria Voltage Zone is that range of normal load condition voltages which shall be used as the basis for all system design and operation.

Tolerable Voltage Zone is that range of normal voltages which may be experienced under unfavorable conditions of design or operation. Where it is shown that voltages between the design and tolerable zone cause customer trouble, all reasonable measures shall be taken to correct the situation.

These voltage zones shall not be construed as indicating system or individual customer regulation.

Except as modified herein, ANSI C84.1-1982, American National Standards for Electric Power Systems and Equipment-Voltage Ratings (60 Hz) are applicable.

		Voltage Zones (City Light Practice)				
			Design Criteria			
	Nominal Voltage	Tolerable Minimum	Minimum	Maximum	Tolerable Maximum	System Point
Customer	120/240 Secondary	115/230	116/232	124/248	127/254	Service Entrance
	208Y/120 Secondary	199Y/115	201Y/116	214Y/124	220Y/127	Service Entrance
	240/480 Secondary	230/460	232/464	248/496	254/508	Service Entrance
	480Y/277 Secondary	460Y/265	464Y/268	496Y/286	508Y/293	Service Entrance
	4160Y/2400 Primary	4088Y/2360	4157Y/2400	4330Y/2500	4434Y/2560	Primary Customer
	13,800 Primary (Network Service only)	13,200	13,420	13,750	14,080	Primary Customer
	26,400 Overhead	24,550	24,950	26,650	27,300	Primary Customer
System	4160Y/2400 Primary/Overhead	4088Y/2360	4157Y/2400	4330Y/2500	4434Y/2560	Primary of Distr. Transformer
	4330Y/2500 Sec. Network U.G.	4160Y/2400	4226Y/2440	4360Y/2520	4434Y/2560	Primary of Distr. Transformer
	13,800 Primary Sec. Network U.G.	13,200	13,420	13,750	14,080	Primary of Distr. Transformer
	26,400Y/15,000 Primary O.H.	24,550Y/14,174	24,950Y/14,405	26,650Y/15,386	27,300Y/15,762	Primary of Distr. Transformer
	4160Y/2400 Overhead Primary	4088Y/2360	4226Y/2440	4330Y/2500	4434Y/2560	Distribution Sub. Bus, Regulated
	13,800 Primary Sec. Network U.G.	13,200	13,420	13,750	14,080	Substation Bus
	26,400 Distribution	24,550	24,950	26,650	27,300	Rec. Sub. Bus
	115,000 Transmission	113,000	115,000	118,800	119,750	Rec. Sub. Bus
	230,000 Transmission	215,000	229,000	239,000	242,000	Rec. Sub. Bus
	230,000 Transmission	220,000	230,000	242,000	242,000	Station Bus, Generating

ORIGINATOR	STANDARDS COORDINATOR	STANDARDS SUPERVISOR	UNIT DIRECTOR
Jim S. Horn	Charles L. Shaffer	[illegible]	[illegible]

FULL LOAD CURRENTS IN AMPERES – SINGLE-PHASE CIRCUITS

Full Load Current = (kVA x 1000) / Circuit Voltage

kVA	CIRCUIT VOLTAGE					
	120	240	480	2400	4160	14760
3	25.0	12.5	6.25	1.25	0.72	0.20
5	41.7	20.8	10.4	2.08	1.20	0.34
10	83.3	41.7	20.8	4.17	2.40	0.68
15	125	62.5	31.3	6.25	3.61	1.02
25	208	104	52.1	10.4	6.01	1.69
37.5	313	156	78.1	15.6	9.01	2.54
50	417	208	104	20.8	12.0	3.39
75	625	313	156	31.3	18.0	5.08
100	833	417	208	41.7	24.0	6.78
167	1392	696	348	69.6	40.1	11.3
250	2083	1042	521	104	60.1	16.9
333	2775	1388	694	139	80.0	22.6
500	4167	2083	1042	208	120	33.9

FULL LOAD CURRENTS IN AMPERES – THREE-PHASE CIRCUITS

Full Load Current = (kVA x 1000) / ($\sqrt{3}$ x Circuit Voltage)

kVA	CIRCUIT VOLTAGE						
	208	240	480	2400	4160	13800	26400
9	25.0	21.7	10.8	2.17	1.25	0.38	0.20
15	41.6	36.1	18.0	3.61	2.08	0.63	0.33
30	83.3	72.2	36.1	7.22	4.16	1.26	0.66
45	125	108	54	10.8	6.25	1.88	0.98
75	208	180	90.2	18.0	10.4	3.14	1.64
112.5	312	271	135	27.1	15.6	4.71	2.46
150	416	361	180	36.1	20.8	6.28	3.28
225	625	541	271	54.1	31.2	9.41	4.92
300	833	722	361	72.2	41.6	12.6	6.56
500	1388	1203	601	120	69.4	20.9	10.9
750	2082	1804	902	180	104	31.4	16.4
1000	2776	2406	1203	241	139	41.8	21.9
1500	4164	3608	1804	361	208	62.8	32.8
2000	5551	4811	2406	481	278	83.7	43.7
2500	6939	6014	3007	601	347	105	54.7

ORIGINATOR	STANDARDS COORDINATOR	STANDARDS SUPERVISOR	UNIT DIRECTOR
Jim S. Horn	Charles L. Shaffer	John Skimmer	Betty Robin

HAND SIGNALS
FOR USE IN LINE CONSTRUCTION

Scope

In line work, many operations are performed by power machines, and the operators are given their directions by a signalperson. Hand signals are a type of conversation between workers and since they are often given from a distance, the signals should be clear and distinct. Sloppy signals are like mumbled speech --- not clearly understood. Of equal importance - one person shall be designated as signalperson and that person shall be well versed in the use of all signals, for the safety of the entire crew depends upon the proper execution and understanding, of the signals used.

A signalperson should be highly visible at all times and check often to make sure that they can be seen. It is important that the signalperson face the receiver of the signal as an entirely different meaning can be read in the reversed position.

A person unsure whether to stop or to go ahead should signal to the end from which the information is to be received (to the signalperson), using the position signal. The sender (signalperson) should then signal either stop or go ahead. As the person asking for information **cannot** initiate a go-ahead signal, **only** the position signal for the wire or rope in question should be used in this inquiry.

All signals should be repeated to the sender before being relayed. The stop signal is the only exception to this rule. If the sender does not receive the same signal in reply, the sender should signal stop and repeat the proper signal. When the proper signal has been repeated, the sender need make no reply.

The exclamation "Hi," as well as the hand signal, is used to stop action and may be initiated by any member of the crew observing an unsafe condition.

A signalperson should never leave the signal position until the “all off” or “completed” signal is passed. Should conditions cause a signalperson to leave the signal position, they should signal a stop until able to resume the signal position and communications can be reestablished.

The following signals are for use in City Light line work.

ORIGINATOR	STANDARDS COORDINATOR	STANDARDS SUPERVISOR	UNIT DIRECTOR
Jim S. Horn	Charles L. Shaffer	John C. Kimmer	Harold Jay

HAND SIGNALS FOR USE IN LINE CONSTRUCTION

WINCH OR CAPSTAN LINE

TAKE UP

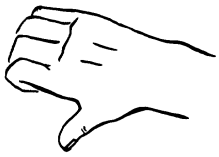

LOWER

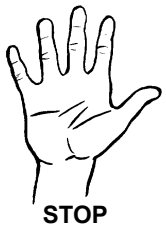

STOP

PULL

LOWER

HOIST

indicate amount of lower by spreading of hands

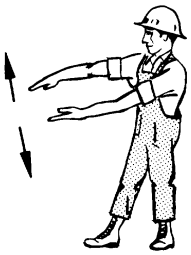

SLACK OFF SLOW OR LOWER A LITTLE

indicate amount of raise by spreading of hands

TAKE UP SLOW OR RAISE A LITTLE

CRANE

LOWER BOOM

RAISE BOOM

LOWER BOOM RAISE LOAD

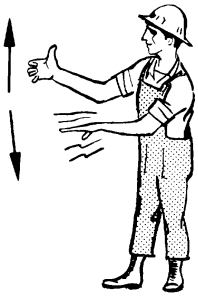

RAISE BOOM LOWER LOAD

MANEUVERING VEHICLE

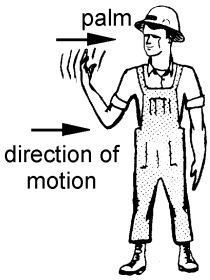

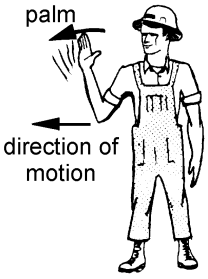

MOVE

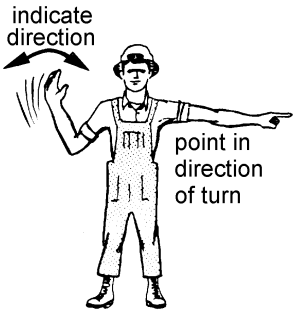

TURN WHILE MOVING

STRAIGHTEN OUT

HAND SIGNALS FOR USE IN LINE CONSTRUCTION

ERECTING AND ALIGNING POLES

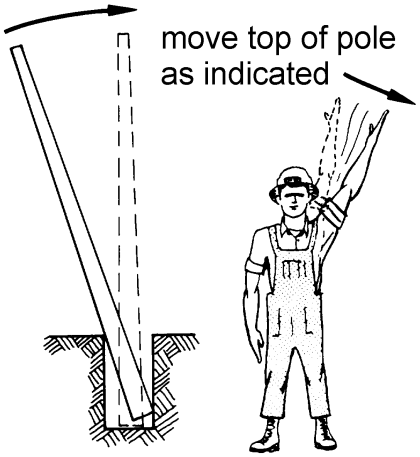

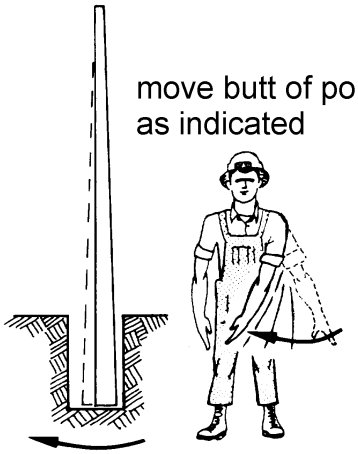

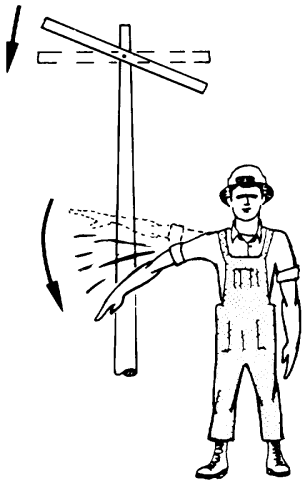

LINE WORK

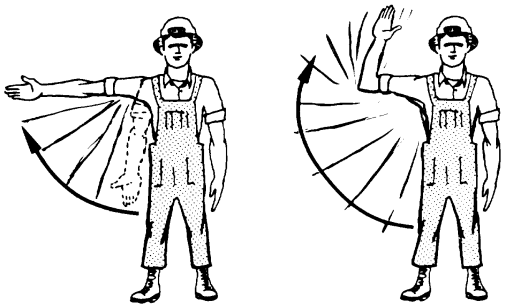

PULL UP WIRE

STOP

START **FINISH**

SLACK BACK SIGNAL

Indicate by arm down, body stooping over sideways, arm swinging from side to side

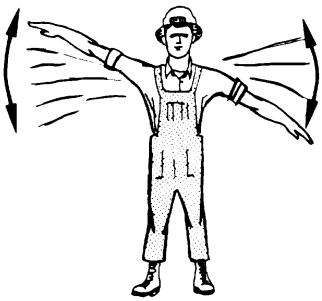

SLOW

MAKE UP

ALL OFF
Indicate by arms crossed over head and swinging down to a crossed position below waist.

CUT

ALL OFF
OR COMPLETED

Clap Hands

HAND SIGNALS FOR USE IN LINE CONSTRUCTION

CROSSARM

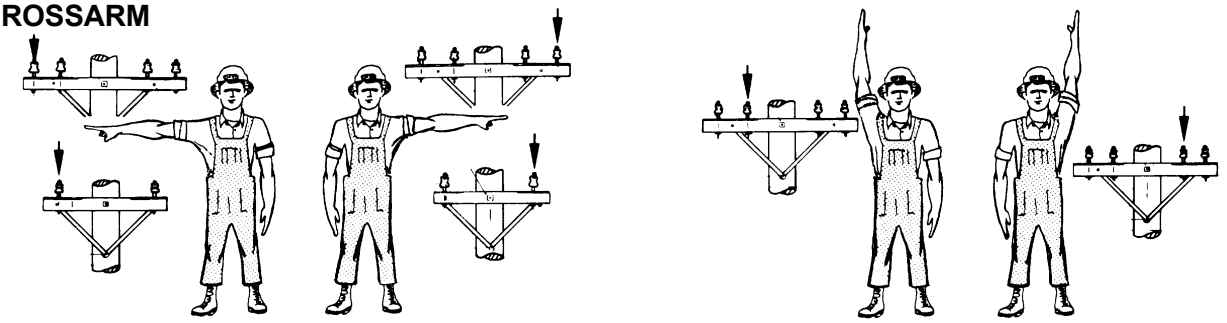

TRIANGULAR

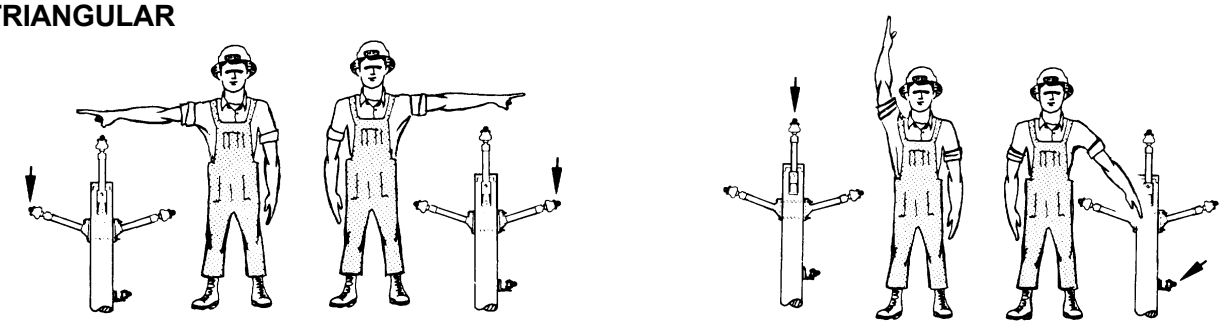

L. T. TRANSMISSION LINES

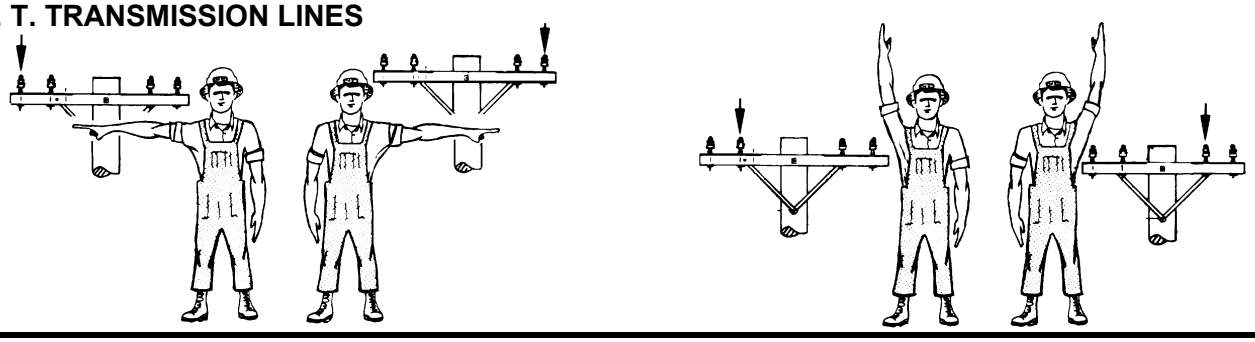

SECONDARY

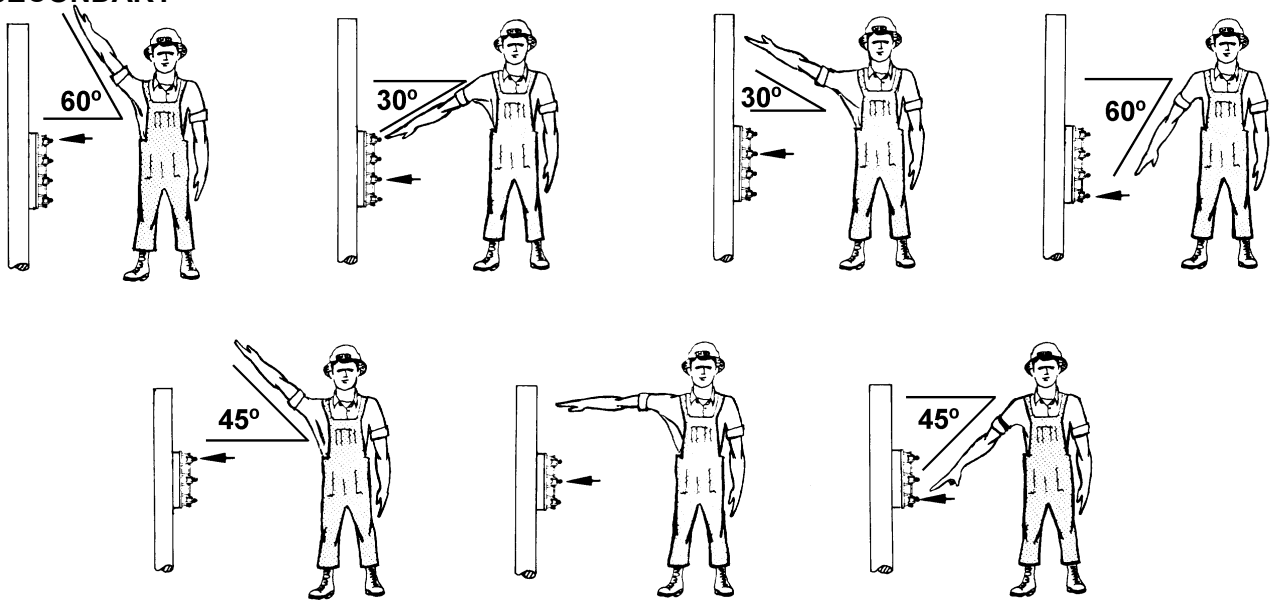

SEATTLE CITY LIGHT

CONSTRUCTION GUIDELINE

STANDARD NUMBER: **S319-1/NSA-20**
PAGE: 1 of 1
DATE: March 3, 1965
REV: May 1, 2002

HAND SIGNALS FOR SHOVEL AND CRANE OPERATION

1

HOIST
Make circular motion with hand pointing upwards.

2

LOWER
Make circular motion with hand pointing downwards.

3

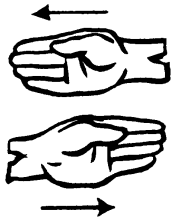

SWING
Hand outstretched, pointing direction desired.

4

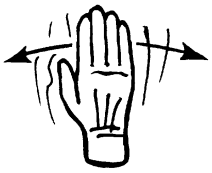

STOP
Hand out, palm down. Wave hand back and forth.

5

EASY
Make circular motion of one hand over other to indicate “go slow” or “easy.”

6

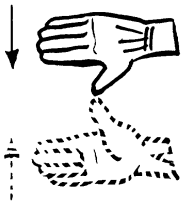

BOOM
Hand outstretched – thumb indicates up or down.

7

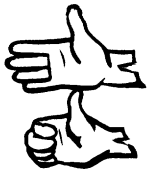

BOOM SAME HEIGHT
Closing and opening same hand with “Boom” signal indicates load to remain at same height while booming. Above indicates “raise boom, lower boom, lower load evenly.

8

BOOM IN OR SHORTEN BOOM
Fists clenched, thumbs pointing together, back and forth motion.

9

BOOM OUT OR LENGTH BOOM
Fists clenched, thumbs pointing away from each other, back and forth motion.

10

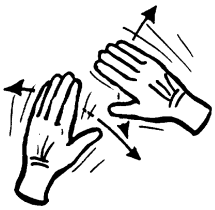

EMERGENCY STOP
Wave both hands back and forth.

11

DOG EVERYTHING
Hands clasped together. Stops all moving of load.

12

HEADBLOCK-HAMMER
Touch hat with one hand – other hand indicates movement.

13

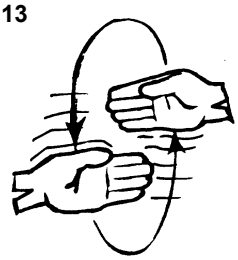

TRAVEL
Rotate hands in direction of travel desired.

14

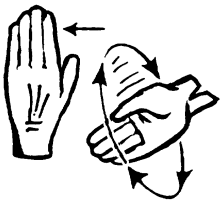

LEFT TURN
Come ahead (or back) on this track.

15

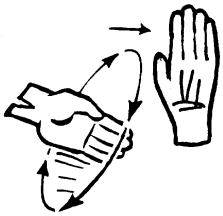

RIGHT TURN
Come ahead (or back) on this track.

16

BACK IN
Indicates mobile crane or truck should back into position.

17

DRIVE IN
Indicates mobile crane or truck should drive into position head first.

18

WHIP LEADS
Touch elbow with glove or hand. Extended hand gives action signal (hoist, lower, stop).

ORIGINATOR	STANDARDS COORDINATOR	STANDARDS SUPERVISOR	UNIT DIRECTOR
Jim S. Horn	Charles L. Shaffer	John C. Skinner	Hardie Frey

SAFE WORKING LOAD FOR ROPES AND SLINGS

New Manila Rope– Three Strand – Standard Lay

Diameter Inches	Circumference Inches	Safe Working Load – Pounds: Single Rope	Two Part Slings 60º	Two Part Slings 45º	Two Part Slings 30º	Breaking Strength Pounds
1/4	3/4	120	208	170	120	600
3/8	1-1/8	270	467	382	270	1,350
1/2	1-1/2	530	917	749	530	2,650
5/8	2	880	1,522	1,244	880	4,400
3/4	2-1/4	1,080	1,868	1,527	1,080	5,400
7/8	2-3/4	1,540	2,664	2,178	1,540	7,700
1	3	1,800	3,114	2,545	1,800	9,000
1-1/8	3-1/2	2,400	4,152	3,394	2,400	12,000
1-1/4	3-3/4	2,700	4,671	3,818	2,700	13,500
1-5/16	4	3,000	5,190	4,242	3,000	15,000
1-1/2	4-1/2	3,700	6,401	5,232	3,700	18,500
1-5/8	5	4,500	7,785	6,363	4,500	22,500
1-3/4	5-1/2	5,300	9,169	7,494	5,300	26,500
2	6	6,200	10,726	8,767	6,200	31,000

Polypropylene Rope – Three Strand – Standard Lay

Diameter Inches	Circumference Inches	Safe Working Load – Pounds: Single Rope	Two Part Slings 60º	Two Part Slings 45º	Two Part Slings 30º	Breaking Strength Pounds
1/4	3/4	210	365	300	210	1,050
3/8	1-1/8	450	780	645	450	2,250
7/16	1-1/4	620	1,075	810	620	3,100
1/2	1-1/2	760	1,310	1,090	760	3,800
5/8	2	1,320	2,265	1,895	1,320	6,600
3/4	2-1/4	1,700	2,917	2,441	1,700	8,500
7/8	2-3/4	2,260	3,910	3,245	2,260	11,300
1	3	2,800	4,805	4,020	2,800	14,000
1-1/8	3-1/2	4,100	7,095	5,885	4,100	20,500
1-1/4	3-3/4	4,500	7,855	6,515	4,500	22,700
1-5/16	4	5,180	8,960	7,435	5,180	25,900
1-1/2	4-1/2	6,500	11,245	9,325	6,500	32,500
1-5/8	5	7,560	13,080	10,810	7,560	37,800
1-3/4	5-1/2	9,040	15,640	12,970	9,040	45,200
2	6	10,820	18,720	15,525	10,820	54,100

Wire Rope – Improved Plow Strand – 6 Strands – 19 or 37 Wires per Strand – Hempcore

Diameter Inches	Circumference Inches	Safe Working Load – Pounds: Single Rope	Two Part Slings 60º	Two Part Slings 45º	Two Part Slings 30º	Breaking Strength Tons
1/4	3/4	1,096	1,900	1,550	1,096	2.74
3/8	1-1/8	2,440	4,230	3,460	2,440	6.10
7/16	1-3/8	3,310	5,758	4,699	3,310	8.27
1/2	1-1/2	4,280	7,450	6,080	4,280	10.70
5/8	2	6,600	11,600	9,430	6,670	16.70
3/4	2-1/4	9,400	16,500	13,450	9,520	23.80
7/8	2-3/4	12,800	22,300	18,200	12,800	32.20
1	3	16,000	29,000	23,690	16,790	41.80
1-1/8	3-1/2	21,000	36,450	29,780	21,040	52.60
1-1/4	4	26,000	44,700	36,570	25,870	64.60
1-3/8	4-1/4	31,000	53,800	43,900	31,050	77.70
1-1/2	4-3/4	37,000	63,700	52,000	36,800	92.00
1-5/8	5	43,000	74,400	60,700	42,900	107.00
1-3/4	5-1/2	49,600	86,000	70,260	49,700	124.00
2	6-1/4	64,000	110,700	90,400	64,000	160.00

ORIGINATOR	STANDARDS COORDINATOR	STANDARDS SUPERVISOR	UNIT DIRECTOR
Jim S. Horn	Charles L. Shaffer	John C. Skinner	Hardie Frey

SAFE POLE CLIMBING PRACTICES

The purpose of this Safety Standard is to instruct in the proper use and care of pole climbing equipment. Pole climbing can be hazardous or safe, but the hazards can be reduced by heeding basic precautions.

Pole attachments must be avoided whenever possible to avoid being thrown off balance. Attention to the pole surface will prevent placing a gaff in unsound wood, in a defect or against a metallic object. Attentive and skilled use of equipment will prevent most accidents and resultant injuries.

The body belt and safety strap, when properly used, provide for security and full use of the hands when in a working position. The three safety practices that should be made a habit are:

1. Be sure the safety snaps are in both D-rings with keepers turned out.
2. Always use the safety strap, even when the working position seems otherwise secure.
3. Make certain that a safety strap cannot slip over the top of the pole.

Daily use of these three precautions can prevent serious accidents.

Beginning

Before climbing, the beginner should practice strapping off on the ground. Climbing may be practiced on the first two or three feet of the pole. Practice ascending and descending, strapping off and unstrapping before you climb to any height.

Climbing

Protect hands and arms by wearing gloves and long sleeve shirts when climbing or descending poles. Ascend a pole by climbing without haste and with confidence in good climbing equipment.

1. Before climbing, inspect the pole for unsafe conditions, such as cracks, nails, attachments, rot, or loose pole steps. Inspect the pole visually when ascending or descending to avoid hazardous spots.
2. The length of each step should be approximately eight (8) inches. The angle between the climbing iron and the pole should be approximately 30 degrees.
3. Keep hips, knees and shoulders a comfortable distance away from the pole. Check to see if the gaffs are being placed in sound wood.
4. The weight of one's body will usually be sufficient to force the gaff into the pole. However, on hardwood poles it may be necessary to use additional force by jabbing the gaff sharply into the pole. The hand, on the side of the body on which the leg is up, is raised with or slightly before, the foot.
5. Shift weight gradually from one leg to the other before removing a gaff from the pole. The horizontal distance between gaff positions across the pole should be approximately four (4) to six (6) inches, depending on the size of the pole.
6. In descending a pole, the sane basics apply. Take short steps, keep the knees, hips and shoulders away from the pole. Keep a 30-degree angle between the shank of the climber and the pole and keep the gaffs and hands in the correct position.

To disengage a gaff embedded too deeply in a pole, press the sole of the boot against the pole. This action provides sufficient leverage to raise the gaff from the pole. Don't break the gaff from the pole by allowing the knee to fall away from the pole. This damages a pole that you or one of your fellow workers my have to climb again.

Strapping Off

The proper method in making the safety strap ready to use is simple and should become a habit. The following practices are recommended:

1. Set gaffs with both feet on the same level, hold on to the pole with the right hand, and reach for the strap with the left hand.
2. Check to see that the other end of the strap is engaged in the D-ring. With the left hand, unfasten the snap hook on the single end of the strap from the D-ring.
3. Pass the strap around the pole until it can be reached by the right hand.
4. Hold on to the pole with the left hand, making sure that the strap is flat against the pole, not twisted; carry the strap to the D-ring.
5. Fasten the snap hook to the right D-ring with the keeper facing out.
6. A click heard when fastening the snap hook to the D-ring does not mean the connection is securely made. Check, the connection visually before you put your weight on the belt.
7. The body may now be moved back, supported by the strap. Hold the right side of the safety strap with the right hand when leaning back as an additional precaution, before removing the left hand from the pole.

ORIGINATOR	STANDARDS COORDINATOR	STANDARDS SUPERVISOR	UNIT DIRECTOR
Jim S. Horn	Charles L. Shaffer	John C. Skinner	Gordon Jay

ALUMINUM STREETLIGHT POLE INSTALLATION

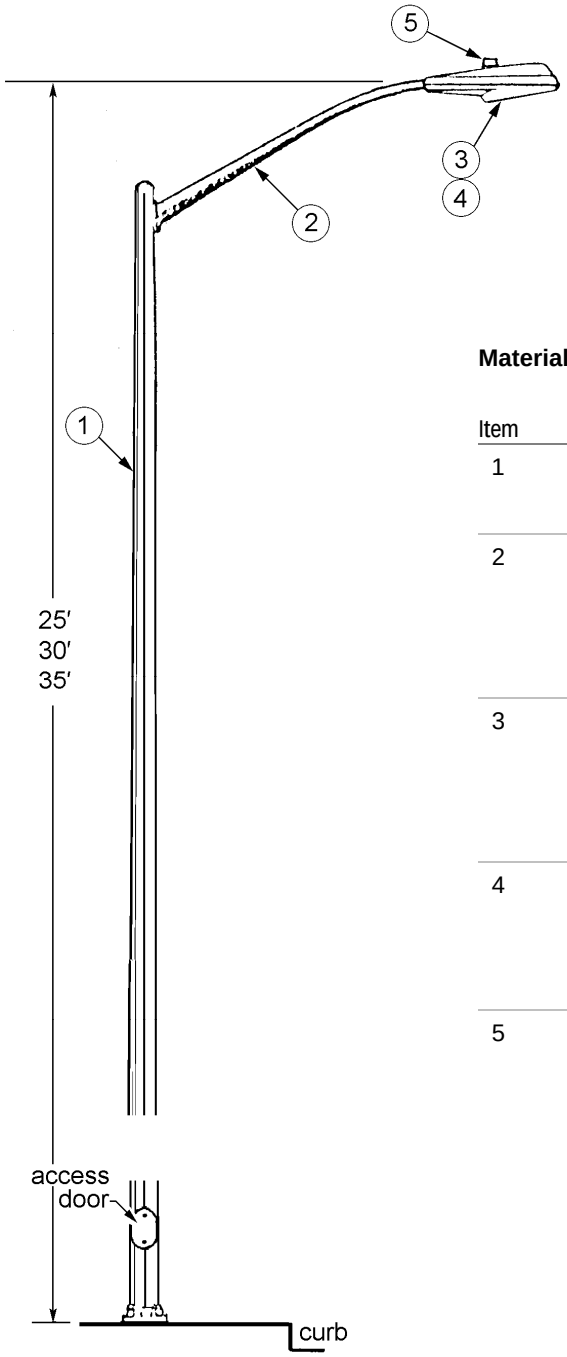

Material List

Item	Quantity	Description		Stock Number
1	1	POLE, aluminum streetlight anchor base	25 ft	573984
			35 ft	573986
2	1	BRACKET, luminaire	4 ft	570525
			6 ft	570526
			8 ft	570527
			10 ft	570528
3	1	LUMINAIRE, high pressure sodium (HPS)	100 W	572408
			150 W	572407
			250 W	572800
			400 W	572801
4	1	LAMPS, HPS, 30,000 hour	100 W	012743
			150 W	013016
			250 W	012744
			400 W	012745
5	1	CONTROL, 105v/300 Volt		569333

standards coordinator	standards supervisor	unit director
Curtis Lu	John Shipek	Pamela S. Johnson

Pole Mounting Detail

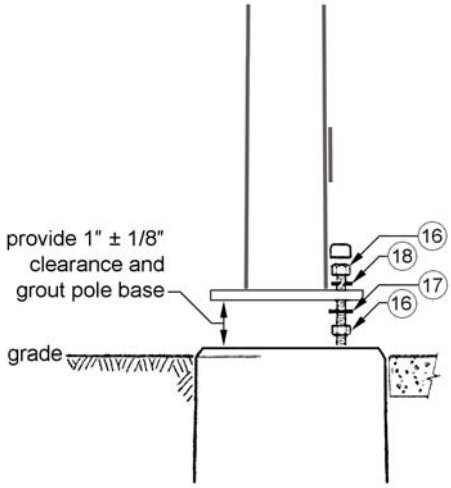

Material List

Item	Quantity	Description
16	8	NUT, usually supplied with pole
17	4	WASHER, flat, usually supplied with pole
18	4	WASHER, lock, usually supplied with pole

Notes

a. Anchor bolts, leveling nuts and washers are supplied with streetlight standard.

b. Leveling nuts shall be placed on anchor bolts to allow approximately one inch of dry pack mortar under the base of standard. Standard shall be placed on the bolts and the leveling and locking nuts adjusted to plumb the pole. The back of the pole is to be plumb after final adjustment.

c. Install 1/2-inch dowel in grout against surface of concrete base on lowest side to form weep hole, remove dowel before grout sets.

References

1710.50.; "Streetlight System Bonding and Grounding"; Construction Standard; SCL

Lu, Curtis; SCL Standards Engineer, subject matter expert and originator of SL10-2/NSL-50 (curtis.lu@seattle.gov)

SL-10-5/NSL-80; "Streetlight Pole Base, Installation Details"; Construction Standard; SCL

STREETLIGHT POLE BASE INSTALLATION DETAILS

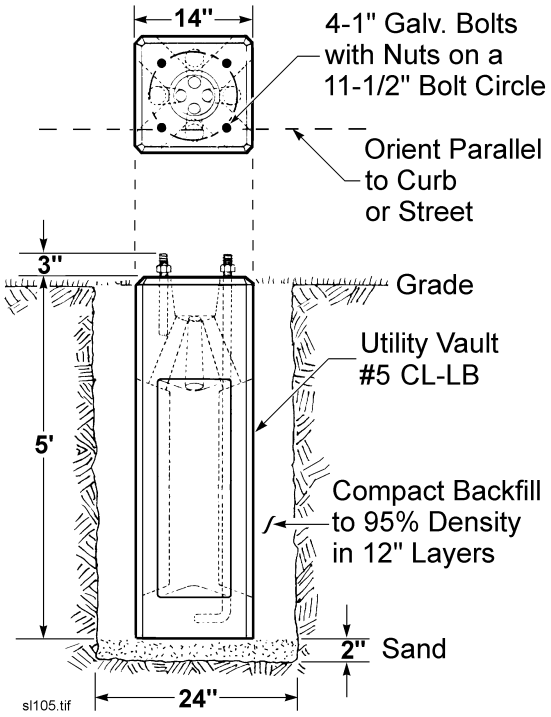

Pole Base
25’, 30’, and 35’ Aluminum Poles

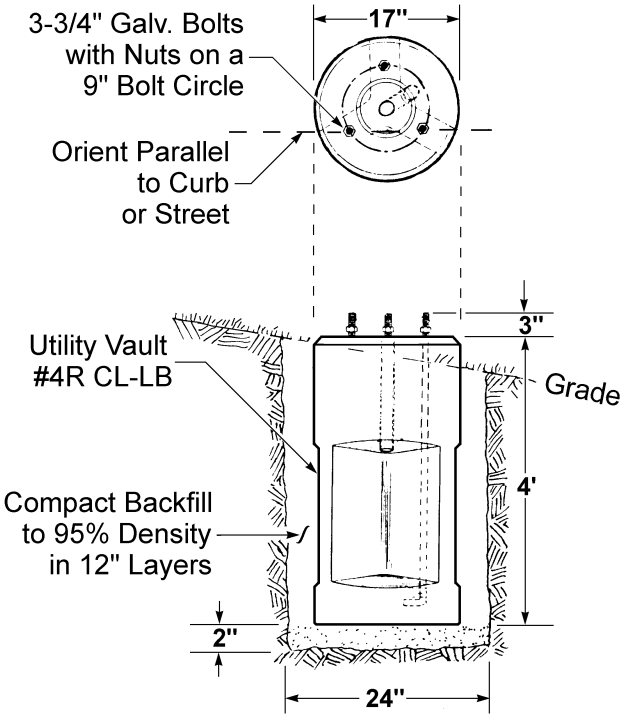

Pole Base
14’, 17’, and 19’ Aluminum Poles

Setting Direct Buried Poles

Hole Sizes for Direct Buried Poles

Pole Length	19’	25’	30’	40’
Diameter of Augered Hole	12”	18”	18”	18”
Depth of Augered Hole	4’	4’-6”	5’	6’

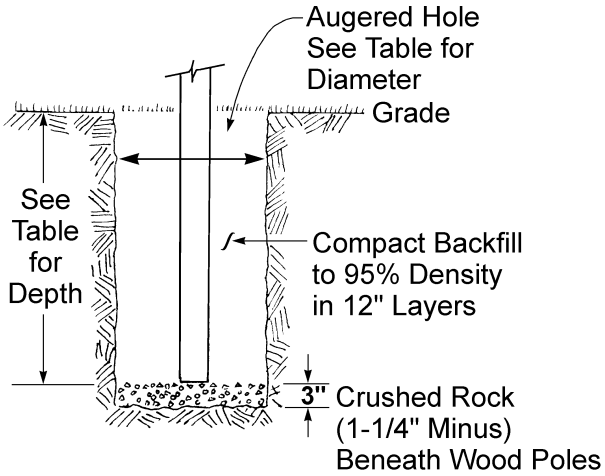

ORIGINATOR	STANDARDS COORDINATOR	STANDARDS SUPERVISOR	UNIT DIRECTOR
Jim S. Horn	Charles L. Shaffer	John Schimmer	Hardie Frey

FUSING SCHEDULE
UNDERGROUND STREETLIGHTING

Lamp Wattage	Fuse Type Amp Rating	Stock Number
175-700	KTK – 10 ampere	683156
1,000	KTK – 15 ampere	683157

NOTES:

1. All energized conductors, except the neutral, shall be fused.
2. All fuses listed fit listed fit the Buss "Tron" HEB in-line fuse holder, Stock Nos. 682346 through 682353, except 682352.
3. Buss Type KTK fuses are rated 600 volts, 100,000 amperes interrupting capacity.

ORIGINATOR	STANDARDS COORDINATOR	STANDARDS SUPERVISOR	UNIT DIRECTOR
Jim S. Horn	Charles L. Shaffer	John C. Skinner	Betty Robin

Seattle City Light

Standards Publications

Looped Radial Crew Handbook

of Selected Standards

material standards

September 2011

This directory lists the City Light Material Standard selected for the Looped Radial Handbook of Selected Standards. The respective page number in this volume, the "handbook page," is shown to the right of each title. Other Material Standards are available through the Red Page.

standard id	section	standard title	handbook page
Material Standards			***tab***
	Underground Including Conduit		
7017.05		*Directional Drilling Conduit System*	***529***

Something missing? Please let us know if something useful could be added to the next edition of the Looped Radial Crew Handbook.

DIRECTIONAL DRILLING CONDUIT SYSTEMS

1. Scope

This material standard covers the requirements for conduit systems specifically intended for directional drilling construction projects.

2. Application

Directional drilling is an underground excavation method using a steerable system for installing pipe, conduit and cable using a surface launched drill rig. A fluid-filled pilot bore is drilled using a fluid-driven motor, and the bore is then enlarged by pre-reaming when necessary, and back reaming to the size required for product pipe installation. The drill head steers the pilot boring.

The conduit systems cited in this standard have been reviewed and approved by Seattle City Light for use on our system.

3. Industry Standards

Conduit shall meet the applicable requirements of the following industry standard:

UL 651 - Standard for Schedule 40 and 80 Rigid PVC Conduit and Fittings, 7th Edition, dated October 4, 2005

4. Requirements

Conduit shall meet the requirements of the latest revision of Material Standard 7015.05 with the following clarification: the requirements of Material Standard 7015.05 are waived where they conflict with the specific nature of the approved, directional drilling-designed joints.

Conduit shall be listed by Underwriters Laboratories, Standard UL 651.

5. Marking

Each conduit section shall be marked according to the requirements of UL 651, Section 25.

The outer surface of each conduit section shall be marked with the following minimum information:

- Trade Size
- Schedule Number or equivalent information
- Manufacturer's name or symbol
- Date (or period) of manufacture

6. Testing

Conduit test data that establishes compliance with the requirements of UL 651 and this material standard shall be provided upon request.

7. Packaging

Conduit shall be furnished in 20 ft sections, unless specified otherwise.

8. Approved Manufacturers

Can>Loc by Cantex

Certa-Com by CertainTeed

Bore-Gard by Prime Conduit

standards coordinator	*standards manager*	*unit director*
John Shipek	John Shipek	Pamela S. Johnson

9. References

7010.05; "Schedule 40 PVC Conduit and Fittings"; Material Standard; SCL

City of Seattle Standard Specifications for Road, Bridge, and Municipal Construction, 2008 edition

Lu, Curtis; SCL Standards Engineer, subject matter expert **(**lu.curtis@seattle.gov**)**

Shipek, John; SCL Standards Engineer, subject matter expert and originator of 7017.05 **(**john.shipek@seattle.gov**)**

www.cantexinc.com

www.certainteed.com

www.primeconduit.com

Seattle City Light

Standards Publications

Looped Radial Crew Handbook

of Selected Standards

design standards

September 2011

This directory lists the City Light Design Standards selected for the Looped Radial Handbook of Selected Standards. The respective page number in this volume, the "handbook page," is shown to the right of each title. Not all Design Standards were selected for the handbook. Other Design Standards are available through the Red Page.

section	section standard id	standard title	handbook page
design standards			*tab*
		subsection	
	9022.40	*the Wit and Wisdom of Dennis Mimier*	***535***
9050	Service Basics		
	9053.00	*Electric Services Basics, Network and Looped Radial System*	***537***
	9053.04	*Electric Service Basics, Looped Radial System, In-Building Vaults*	***541***
	9053.14	*In-Building Vaults Location, Looped Radial System*	***542***
	9057.15	*Common Overhead Single Phase Transformer, Configurations and Secondary Currents*	***544***
9200	Underground Distribution Design		
		general (9200)	
	9202.14	*Vista Switch Design Requirements, 26 kV Looped Radial System*	***553***
		conduit and duct systems (9220)	
	9202.21	*Padmount Vista Switch Requirements*	***558***
	9220.05	*Electric Power Cable and Conduit Selection*	***561***
	9220.50	*Field Identification of Duct Bank*	***565***
	9221.50	*Trench and Duct Bank Design*	***569***
		vaults and handholes (9240)	
	9242.42	*Transformer Secondary Connection*	***572***
	9246.10	*Pulling Irons – Fundamentals and Detailed Requirements, Looped Radial and Network Systems*	***576***
		in-building vaults (9250)	
	9251.00	*Discussion of Construction Standard 0751.00: Concurrent Requirements, In-Building Transformer Vaults, Network and Looped Radial Systems*	***581***
	9251.60	*Discussion of Concurrent Requirements, In-Building Transformer Vaults, Looped Radial System*	***597***
	9255.14	*Minimum In-Building Vault Dimensions, Looped Radial Systems*	***611***
	9255.50	*In-Building Vault Ventilation, Positive and Negative Pressure, Network and Looped Radial Systems*	***612***
	9256.10	*Underground and In-Building MCLF Placement, 26.4 kV Looped Radial, Grounded Wye System*	***613***
		cable (9270)	
	9271.05	*Cable Pulling Engineering Fundamentals*	***626***

section	section standard id	standard title	handbook page
9600	Equipment and Materials		***tab***
		general (9600)	
	9605.05	*Matters to Consider When Completing a Stock Recommendation Form*	***649***
		OH and UG secondary and service cable (9650)	
	9606.71	*Requirements for Failure Analysis Reports*	***657***
	9650.03	*Properties of 600 Volt and Weather-Proof Cables*	***661***
	9650.05	*Electrical Properties of 600 Volt Cables*	***667***
		primary cable (9660)	
	9660.04	*Properties of Medium Voltage Cables*	***699***
	9660.06	*Electrical Properties of Medium Voltage Cables*	***705***
		grounding (9700)	
	9702.30	*Grounding and Bonding, Fundamentals and Detailed Requirements*	***719***
		system protection (9750)	
	9752.10	*Fault Current Along a Representative 26 kV, Looped Radial Feeder*	***726***

Something missing? Please let us know if something useful could be added to the next edition of the Looped Radial Crew Handbook.

THE WIT AND WISDOM OF DENNIS MIMIER

1. Scope

If a man woke up in the middle of the night from the smell of smoke and he dashed out of his burning house grabbing only his pajama bottoms … this standard is the pajama bottoms.

By the time he retires in June 2011, Dennis Mimier will have served Seattle City Light for over forty years. When this project was conceived in late 2010, he was already counting down the days.

The purpose of this document is to share some of Dennis's keen wit and wisdom with the next generation of engineers and to honor a great contributor to the cause of Standards.

2. Application

This standard is directed at Seattle City Light engineers who would like to learn more about the practical workings and concerns of field operations.

3. Protected and Unprotected Cable

Question: What is meant by protected and unprotected cable?

Answer: Our main stem feeder cables are all considered unprotected because a station breaker is the only upstream protective device capable of clearing a fault. All taps off the main stem feeder (typically 1/0 AWG aluminum cable) are considered protected because they have a current-limiting fuse in the circuit.

Question: What is the significance of protected and unprotected cable?

Answer: Our 26.4 kV, solidly grounded wye, distribution system has very high fault current. While a station breaker can clear a fault, it has such a slow response that a tremendous amount of energy is released at the fault site, posing a serious hazard to line workers who may be in the area. Current-limiting fuses can clear a fault in 1/10th of a cycle, so fast that very little energy is released at the fault site, virtually eliminating the hazard from arc flash.

standards coordinator	standards supervisor	unit director
John Shipek	John Shipek	Darnell Cola

Question: What should distribution system design engineers do with this information?

Answer: Avoid situations of unprotected 1/0 AWG aluminum cable. They lead to false identification. Avoid locating unprotected cable in the same vault as protected cable. Mixing cables of this type creates extra work related to obtaining clearances.

Question: Tell us more about the extra work involved if protected and unprotected cables are run through the same vault.

Answer: If a worker enters a vault containing unprotected cable, he is obligated to obtain a Hold Open (A.K.A. a Non-Reclose) on the circuit before starting work (on a protected cable). If the unprotected cable is old, he is obligated to remove it from service before continuing.

For further study, refer to Design Standard 9256.10, "Underground And In-Building MCLF Placement, 26.4 kV Looped Radial, Grounded-Wye System"

4. Separable Connectors

Question: What are the differences between the deadbreak, non-load break, and loadbreak elbows?

Answer: Deadbreak (all black shell) may be open only when de-energized. Non-loadbreak (one white band on shell) may be opened when energized, but only during unloaded conditions. Loadbreak (two white bands on shell) may be opened or closed under load.

Question: Why don't we break transformer load with elbows?

Answer: 90% of the elbows are positions that don't allow safe loadbreak operation. When elbows get hot, the silicone sealant can become sticky and prevent operation. Lastly, loadbreak elbows on our system must be preceded by a fuse to insure safe operation.

Question: Why don't we use loadbreak elbows on transformers and just operate them as deadbreak?

Answer: If a loadbreak elbow is installed, but not used as such, we're supposed to remove the indicating bands per a national standard. These bands could be accidentally left on and confuse personnel. As personnel changes and workers are hired from other companies with different operating practices, it is possible the workers will see an elbow that resembles a loadbreak device and try to operate it under load.

For further study, refer to the following SCL Material Standards: 6863.15, "Separable Connector, Deadbreak, Dielectric Components, 125 kV Bil"; 6864.15, "Separable Connector (Elbow), 200 A, Deadbreak"; 6864.05, "Separable Connector (Elbow), 200 A, Loadbreak

5. Loadbreak Elbow Probes

Question: Why are Loadbreak elbow probes seldom replaced?

Answer: Loadbreak elbow probes were designed to be replaced after 100 full load operations. When they were first installed on Seattle City Light's Distribution System, the number of operations on each elbow was tracked so that the probes could be replaced after 20 operations. After a few years, it became clear that a typical elbow would not reach 20 operations during its usable life. As such, the decision was made to replace the entire elbow when necessary rather than attempt to track and replace just the probe.

6. Vendor Relations

"We pay a lot of money for these switches, tell them to sh*t or get off the pot."

7. Capacity Limitations

"You can only put so much horse sh*t in a five-gallon bucket."

8. References

Mimier, Dennis, Electrical Service and Construction Supervisor

Shipek, John; SCL engineer and co-originator of 9022.40.

ELECTRIC SERVICE BASICS, NETWORK AND LOOPED RADIAL SYSTEMS

1. Scope

This standard establishes the basic framework for engineering decisions regarding providing electric service to SCL customers in the Network and Looped Radial areas. Flowcharts on pages 1 and 2 of this Standard document only the initial Looped Radial (OH and URD) decision making process.

2. Application

This standard shall be used to determine the type of service that shall be provided. The intended audience for this design standard is SCL design engineers.

3. Discussion

SCL provides service from the right-of-way per *Requirements for Electrical Service Connection* (RESC), Table 5-1. See Figure 2, page 4 of this Standard. These are referred to as "secondary services". The electricity is provided below 600V. If the customer's request for service falls outside those parameters, SCL can provide a "primary" service, bring in electricity at a much higher voltage and locate electrical equipment on the customer's private property. SCL does not provide customer connections directly to the transmission system, at this time.

The following types of electric service are available from SCL. Please note, all types of service are not available in all areas. See the RESC book for a map.

Network System

- Secondary
- Primary Service
- Spot Network

Looped Radial System

- Secondary
- Primary
- Primary Metered

4. Network Area Services

Smaller customers are typically served from the secondary system in the right-of-way from a Network secondary vault. If additional electrical capacity is required, the customer is required to provide an in-building vault for either a primary service, or for the largest services, spot networks. Primary services can have both primary cables and connections to the secondary system using a bus tie switch. The largest customers have a spot Network vault and may require a primary switch room. Please note there are some areas of the First Hill and University District networks that have small padmounted transformers.

5. Looped Radial Area Services

Smaller customers are served from the right-of-way and have secondary services. Larger customers are provided primary services and are required to provide space for the transformers. Space can be provided inside a building or outside. The largest customers can also choose to provide their own transformers and obtain a primary metered service from SCL. See the flowchart for the initial service decisions in Looped Radial areas.

6. References

Hall, Alan; SCL Engineer; subject matter expert (alan.hall@seattle.gov)

Requirements for Electrical Service Connection; Seattle City Light; 2007

Siddiqi, Uzma; SCL Standards Engineer; subject matter expert and originator of SCL Design Standard 9053.00 (uzma.siddiqi@seattle .gov)

standards coordinator	standards manager	unit director
Uzma Siddiqi	John Shipek	Pam S. Johnson

Figure 1.1, Initial Service Decisions

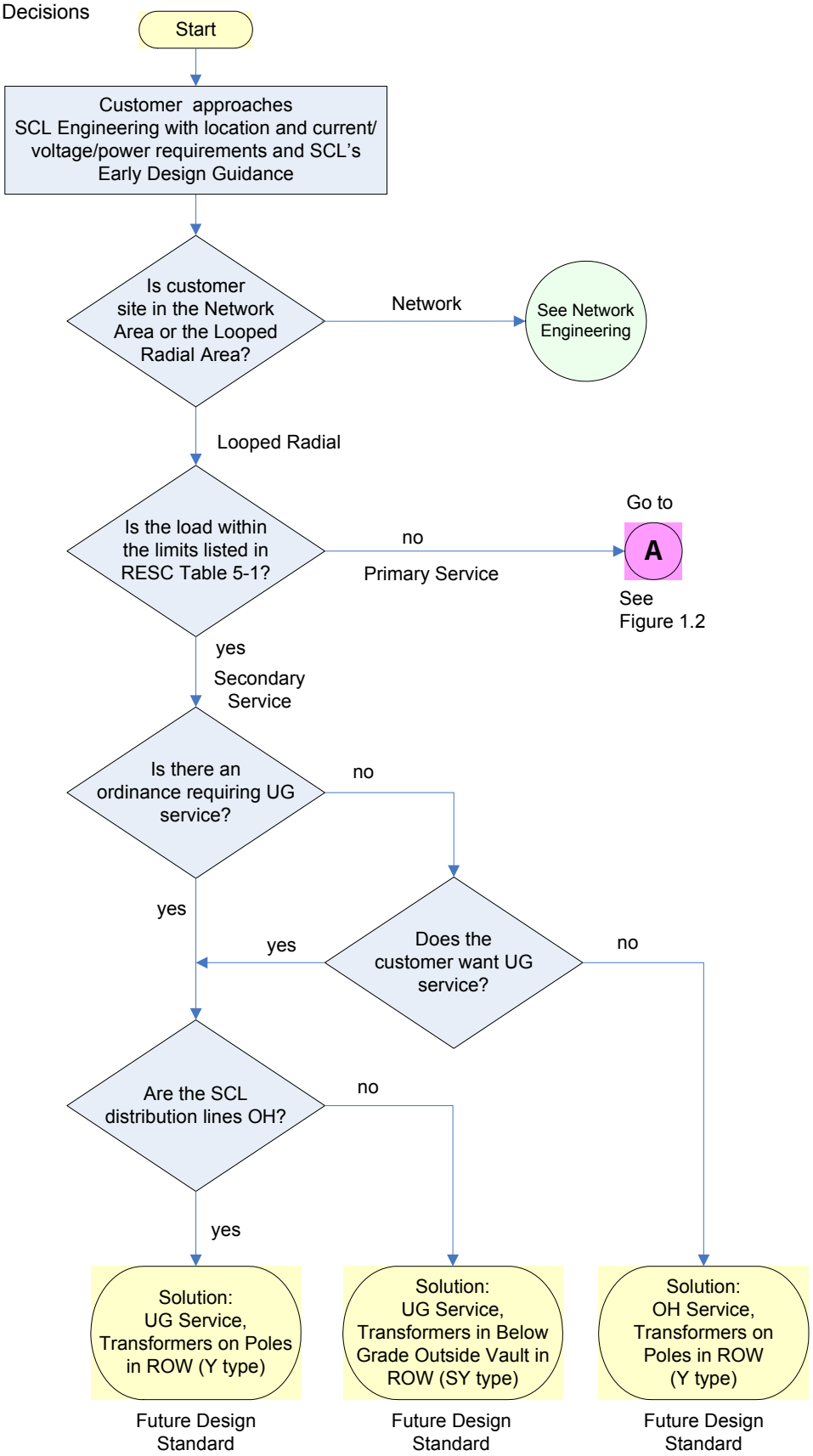

Figure 1.2, Initial Service Decisions – Continuation of Figure 1.1

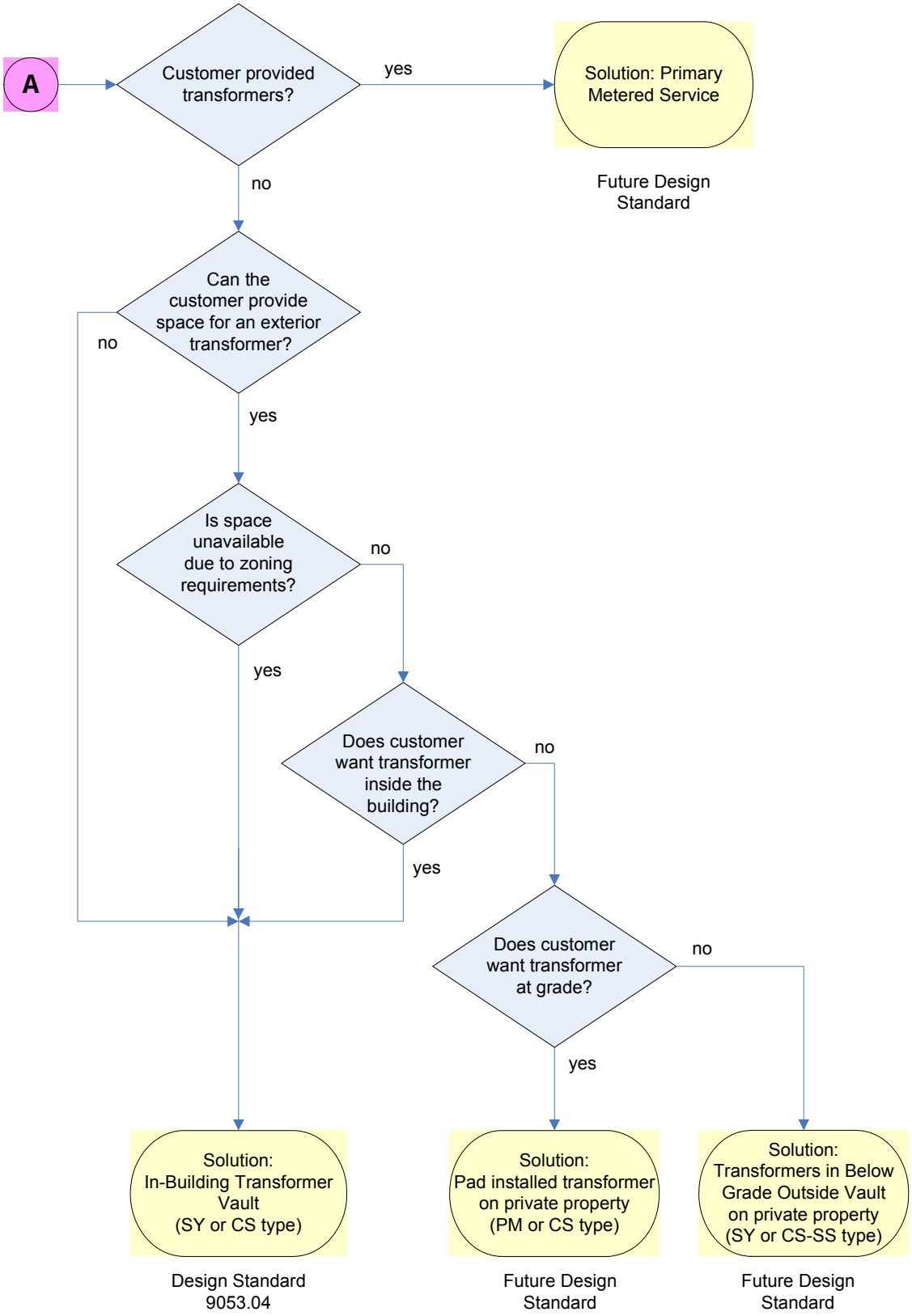

Figure 2, Table 5-1 from page 27 of *"Requirements for Electrical Service Connection;"* Seattle City Light; 2007. See most recent RESC for updates. (On the SCL web site through "New Construction Resources.")

TABLE 5-1: MAXIMUM SERVICE ENTRANCE RATINGS FOR SECONDARY SERVICE

SINGLE PHASE SERVICE VOLTAGE	MAXIMUM SERVICE RATING (amps)
120/240	600
240/480	300
120/208 (Network) [1]	200
277/480 (Network) [1]	100
THREE PHASE SERVICE VOLTAGE	
208Y/120 [2]	1000
480Y/277	600
480/240 Delta [3]	300
240/120 Delta [3]	600
208Y/120 (overhead) [4]	600
208Y/120 (underground non-network) [2]	1000

[1] Limitations indicated by the word "Network" in Table 5-1 apply only to the areas of the City served by the secondary network distribution systems.

[2] If the service ampacity exceeds 600 amperes for secondary underground service, the customer may be required to provide one spare service conduit.

[3] The maximum allowable service ampacities indicated here represent the total single-phase and three-phase loads combined. The customer will be required to connect all single-phase loads across the grounded phase, unless otherwise agreed to by SCL.

[4] If service ampacity exceeds 600 amperes SCL may require an underground service. At Seattle City Light's option, an exception to the maximum service amperes may be granted for 208/120 volt services in buildings which are used exclusively for residential occupancy. This exception will be in writing.

LARGER SERVICES For services exceeding the ampacities shown in Table 5-1, customers will be required to provide the necessary facilities for the installation of Utility transformers and associated equipment on their premises. Other arrangements are allowed only if they are satisfactory to SCL.

MULTIPLE SERVICES In instances where there are multiple services the combined total ampacity shall not exceed the maximum ratings listed in Table 5-1. If original and added ampacity exceeds limits, the customer will be responsible for installation of a transformer vault on the property.

Transformation by Customer

If the customer requires a voltage other than the standard voltages, the customer must supply the equipment required. All special transformation equipment must be installed on the load side of the meter, unless otherwise agreed to in writing.

ELECTRIC SERVICE BASICS, LOOPED RADIAL SYSTEM, IN-BUILDING VAULTS

1. Scope

This standard establishes the framework for engineering decisions related to regarding in-building vaults in the Looped Radial System. These vault rooms are used to house electric utility equipment, most frequently the transformer used to serve electricity to the building.

2. Application

This standard shall be used to obtain an overview of topics that should be addressed when requiring an in-building vault.

The intended audience for this design standard is SCL design engineers.

3. Discussion

There are many design issues surrounding in-building vaults, such as the code based requirements, SCL preferences, etc.

The table below shows the topic and the related Design and Construction Standards. In general, Design Standards are intended as internal documents that state and then explain requirements or provide methodology. Construction Standards are general purpose documents that explain what tasks need to be completed.

In-Building Vault Topics	Design Standards	Construction Standards
Requirements	**9251.00**, Discussion of Construction Standard 0751.00: Customer Requirements, In-Building Transformer Vaults, Network and Looped Radial Systems	**0751.00**, Customer Requirements, In-Building Transformer Vaults, Network and Looped Radial Systems
	9251.60, Discussion of Construction Standard 0751.60: Concurrent Requirements, In-Building Transformer Vaults, Looped Radial System	**0751.60**, Concurrent Customer Requirements, In-Building Transformer Vaults, Looped Radial System
Location	**9053.14**, In-Building Vault Location, Looped Radial System	-
Minimum Vault Dimensions	**9223.07**, Minimum In-Building Vault Dimensions, Looped Radial System	-
Working Clearances	future standard	future standard
Lighting	future standard	**U10-6,** Lighting Installation for Transformer Vaults

4. References:

Requirements for Electrical Service Connection; Seattle City Light; 2007

standards coordinator	standards manager	unit director
Uzma Siddiqi	John Shipek	Pam S. Johnson

IN-BUILDING VAULT LOCATION, LOOPED RADIAL SYSTEM

1. Scope

This standard documents the basic options for the location of in-building vaults in the Looped Radial System.

2. Application

This standard is intended to inform users about best locating in-building vaults. The audience for this design standard is SCL engineering and customer service personnel.

3. Discussion

The primary concern for locating SCL in-building vaults is easy access for SCL personnel and equipment from the Right of Way (ROW). The following options are listed in order of preference:

3.1 "Direct at-grade ROW" location. The first option provides SCL access from the ROW through doors directly into the in-building vault.

SCL prefers that the vault be located at grade and that the vault doors open directly onto the ROW at grade. This can either be into an alley or a sidewalk as shown in figure 3.1.

Figure 3.1

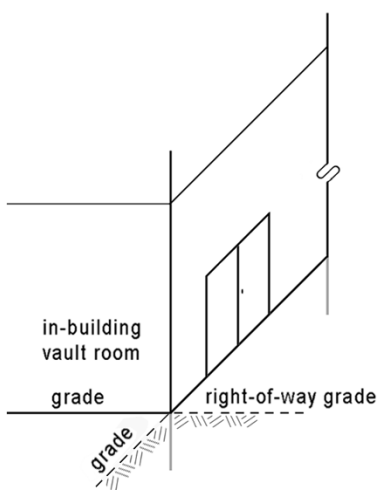

3.2 "Below grade ROW" location. The second option provides SCL access via a below grade entry well from ROW. The vault doors will open into this entry well. The entry well access is through a hatch at grade.

As shown in figure 3.2, if the vault cannot be located at grade with direct access from the ROW, the customer can provide an entry well or vestibule that extends down from grade to the vault doors.

Figure 3.2

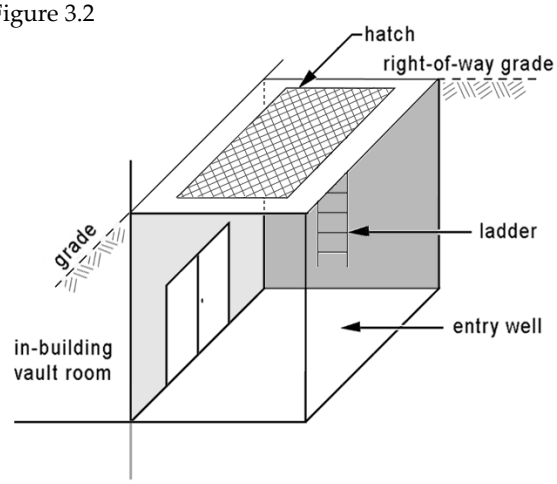

3.3 "No direct ROW" location. This third and least preferred option provides no SCL ROW access. The customer is responsible for transporting SCL's equipment into and out of the in-building vault room. SCL personnel access is through the customer's building.

When a customer chooses not to provide access to the vault room directly from the ROW, the customer is required to sign an *Equipment Transportation Agreement* which states that the customer is responsible for moving SCL equipment into and out of the vault room.

standards coordinator	standards manager	unit director
Uzma Siddiqi	John Shipek	Pam S. Johnson

4. References

Requirements for Electrical Service Connection; Seattle City Light; 2007

Siddiqi, Uzma; SCL Standards Engineer; subject matter expert and originator of SCL Design Standard 9053.14 (uzma.siddiqi@seattle .gov)

U10-2.2; canceled**, "**Transformer Service Vault In-Building with Outdoor, Below Ground Access, Outside Network Area;" Construction Guideline; SCL

COMMON OVERHEAD SINGLE PHASE TRANSFORMER CONFIGURATIONS AND SECONDARY CURRENTS

1. Table of Contents

1. Table of Contents 1
2. Scope 1
3. Application 1
4. Discussion 1
5. References 2
6. Figures and Tables
   6.1 One Single Phase Transformer, Wye 3
   6.2 Two Single Phase Transformers, Open Delta 4
   6.3 Three Single Phase Transformers, Wye .. 5

2. Scope

This design standard illustrates common configurations of overhead single phase transformers used at Seattle City Light. The included tables provide secondary full-load currents to assist with the sizing of conductors.

3. Application

This design standard is intended to be used by SCL engineers to properly size secondary conductors.

4. Discussion

Individual overhead single phase transformers can be installed to provide single phase electrical service to customers or multiple transformers can be connected together in different configurations to provide variations of single and three phase power.

Parallel connected secondary transformer windings are known in industry as "cut straight". In an Open-Delta bank, the typically smaller transformer that provides the three phase service is referred to as the "teaser" and the other transformer is called the "lighter."

standards coordinator	standards manager	unit director
Brett Hanson	John Shipek	Pam S. Johnson

4. Discussion, continued

- Transformers connected as shown in Figures 6.1a and 6.1b provide single phase power. The available secondary voltage options are:
  - 120 V, single phase
  - 240 V, single phase
  - 277 V, single phase (Not common)
  - 480 V, single phase (Not common)
- Transformers connected as shown in Figure 6.2 (open-delta) provide three phase and single phase power. Because only two transformers are used, this configuration is less expensive for the utility; however, the open-delta bank must be derated to 87%. (For example two transformers – a 100 kVA and a 25 kVA – connected in open-delta could only serve 109 kVA of load.)

  The available secondary voltage options are:
  - 120 V, single phase
  - 240 V, single phase
  - 240 V, three phase
  - 480 V, single phase (Not common)
  - 480 V, three phase
- Transformers connected as shown in Figures 6.3a and 6.3b (wye) provide three phase and single phase power. The available secondary voltage options are:
  - 208 V, three phase and 120 V, single phase
  - 240 V, three phase
  - 480 V, three phase and 277 V, single phase

A transformer's secondary current or ampacity varies with its configuration. Configurations and the resulting available secondary current options are provided in Table 6.1 (Single Transformers) and Tables 6.2, 6.3a and 6.3b (Multiple Transformers).

5. References

4150.00; "Overhead Type Single-Phase, Natural Ester Fluid, Distribution Transformers"; Material Standard; SCL

D10-11; "Copper Wire Sizes for Distribution Transformers Secondary Connection"; Construction Guideline; SCL

Hanson, Brett; SCL Standards Engineer, subject matter expert and originator of 9057.15 (brett.hanson@seattle.gov)

Siddiqi, Uzma; SCL Standards Engineer, subject matter expert (uzma.siddiqi@seattle.gov)

6. Transformer Options, Figures and Tables

6.1 One Single Phase Transformer, Wye Connected

Figure 6.1a, Single Phase Transformer
Series Connected Transformer
Secondary Winding

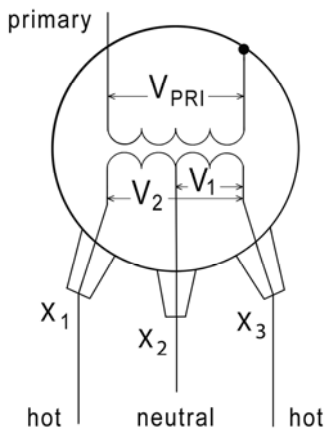

Figure 6.1b, Single Phase Transformer
Cut Straight, Parallel Connected
Transformer Secondary Winding

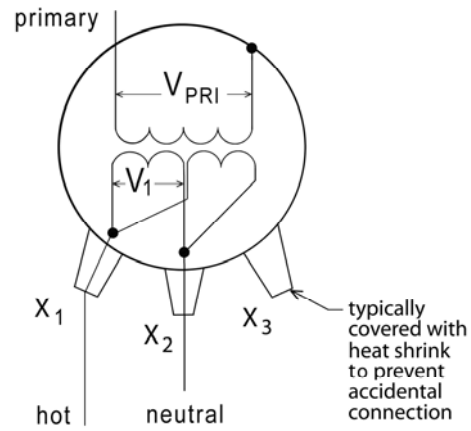

Table 6.1, Secondary Currents of Single Transformers

Configuration	One Single Phase Transformer				
Transformer Secondary Windings Connection	Series			Cut Straight (Parallel)	
Transformer Secondary Voltage Rating, volts	120/240	138/277	240/480	120/240	240/480
Figure	6.1a	6.1a	6.1a	6.1b	6.1b
SCL Provided Service Voltage Options	120 V, 1Φ 240 V, 1Φ	277 V, 1Φ note 2	240 V, 1Φ 480 V, 1Φ note 2	120 V, 1Φ	240 V, 1Φ
V_1	120	138, note 1	240	120	240
V_2	240	277, note 2	480, note 2	na	na
V_{L-L}	na	na	na	na	na
kVA Rating	Amps per Phase				
15	63	note 3	note 3	125	note 3
25	104	90	52	208	104
37.5	156	note 3	note 3	313	note 3
50	208	181	104	417	208
75	313	271	156	625	313
100	417	361	208	833	417
167	696	603	348	1392	696

na: not applicable
note 1 138 volt, single phase services are not provided by Seattle City Light.
note 2 277 volt, single phase and 480 volt, single phase services are provided by Seattle City Light, but are not commonly requested by customers.
note 3 this transformer has no stock number and is not purchased by Seattle City Light.

6. Figures and Tables, continued

6.2 Two Single Phase Transformers, Open Delta Connected

Figure 6.2, Two Single Phase Transformers, Open Delta Connected
Series Connected Transformer, Secondary Winding

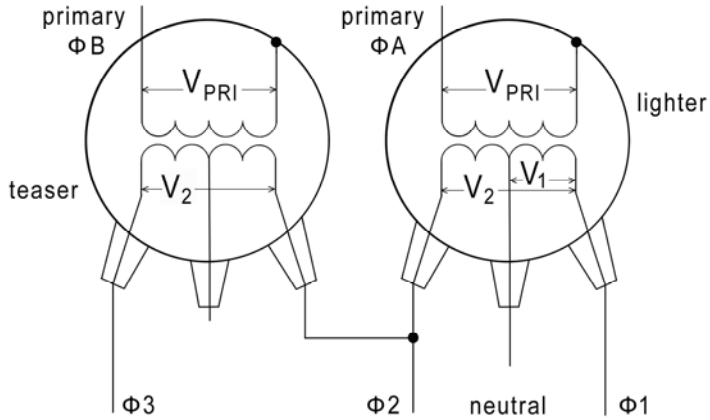

Table 6.2, Secondary Currents of Multiple Transformers in an Open Delta Configuration

Configuration	Two Single Phase Transformers, Open Delta	
Transformer Secondary Windings Connection	Series	
Transformer Secondary Voltage Rating, volts	120/240	240/480
Figure	6.2	6.2
SCL Provided Service Voltage Options	120 V, 1Φ 240 V, 1Φ 240 V, 3Φ	240 V, 1Φ 480 V, 1Φ, note 1 480 V, 3Φ
V_1	120	240
V_2	240	480
V_{L-L}	240	480
kVA Rating	Amps per Phase	
15	Varies with Lighter-Teaser combination	
25		
37.5		
50		
75		
100		
167		

note 1 480 volt, single phase services are provided by Seattle City Light, but are not commonly requested by customers.

6. Figures and Tables, continued

6.3, Three Single Phase Transformers, Wye Connected

Figure 6.3a, Three Single Phase Transformers, Wye Connected
Series Connected Transformer, Secondary Winding

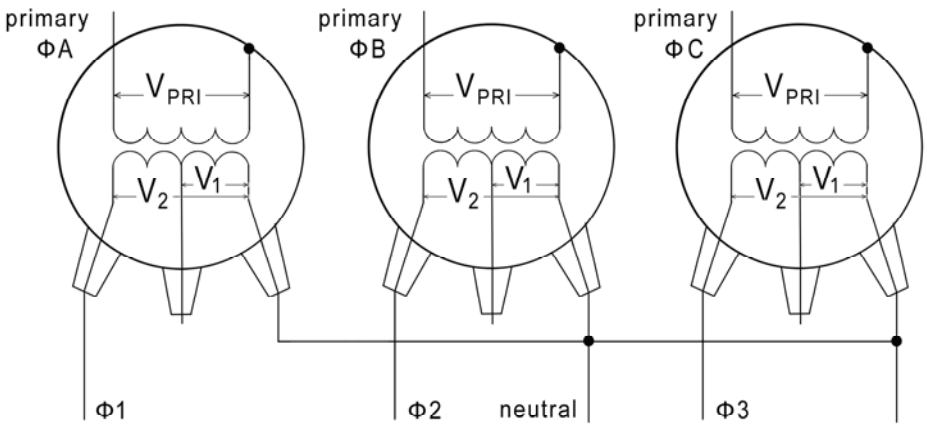

Table 6.3a, Secondary Currents of Multiple Transformers in a Wye Configuration

Configuration	Three Single Phase Transformers, Wye
Transformer Secondary Windings Connection	Series
Transformer Secondary Voltage Rating, volts	138/277
Figure	6.3a
SCL Provided Service Voltage Options	277 V, 1Φ, note 2 480 V, 3Φ
V_1	138, note 1
V_2	277
V_{L-L}	480

kVA Rating	Amps per Phase
15	note 3
25	90
37.5	note 3
50	180
75	271
100	361
167	603

note 1 138 volt, single phase services are not provided by Seattle City Light.
note 2 277 volt, single phase services are provided by Seattle City Light, but are not commonly requested by customers.
note 3 this transformer has no stock number and is not purchased by Seattle City Light.

6. Figures and Tables, continued

6.3 Three Single Phase Transformers, Wye Connected, continued

Figure 6.3b, Three Single Phase Transformers, Wye Connected
Cut Straight - Parallel Connected Transformer Secondary Winding

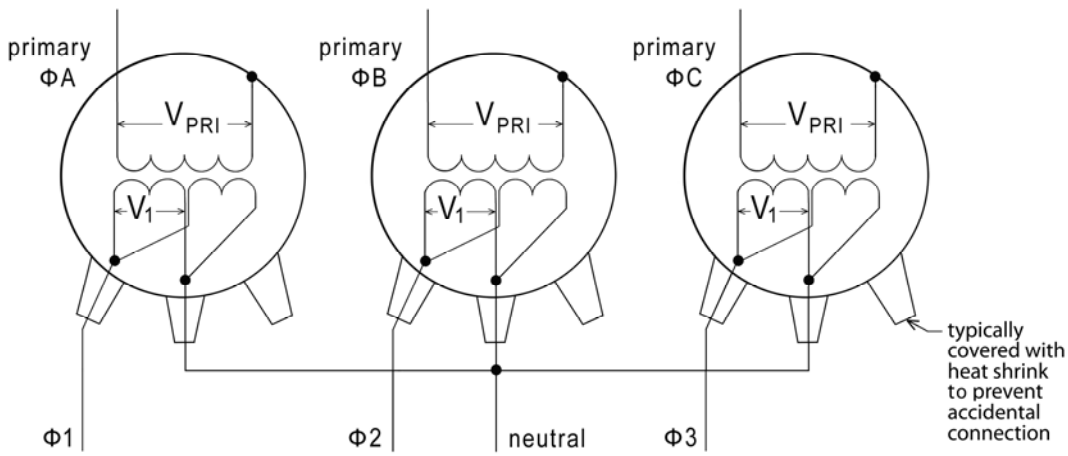

Table 6.3b, Secondary Currents of Multiple Transformers in a Wye Configuration

Configuration	Three Single Phase Transformers, Wye	
Transformer Secondary Windings Connection	Cut Straight (Parallel)	
Transformer Secondary Voltage Rating, volts	120/240	138/277
Figure	6.3b	6.3b
SCL Provided Service Voltage Options	120 V, 1Φ 208 V, 3Φ	240 V, 3Φ
V_1	120	138, note 1
V_2	na	na
V_{L-L}	208	240

kVA Rating	Amps per Phase	
15	125	note 2
25	208	180
37.5	312	note 2
50	416	361
75	625	541
100	833	722
167	1391	1205

note 1 138 volt, single phase services are not provided by Seattle City Light.
note 2 this transformer has no stock number and is not purchased by Seattle City Light.

VISTA SWITCH DESIGN REQUIREMENTS, GENERAL

1. Scope

This Standard presents minimum design requirements for employing S&C Electric's Vista family of switchgear on Seattle City Light's system.

Underground distribution design, protection coordination, and cable and conduit selection are outside the scope of this Standard.

2. Application

While more-detailed design and construction standards are being developed, this Standard provides engineers with basic information to design a safe, reliable, cost-effective, operable, and maintainable system.

As Seattle City Light's overhead 26.4 kV looped radial system is pushed underground, engineers are forced to design systems in advance of proven and established standards. Network Engineering is working toward sectionalizing their feeder system. The application of Vista switches on Seattle City Light's system is a work in progress. The objective of this Standard is to promote communication between Engineering, Large Project Management, Standards, Procurement and Contracting, Material Control, System Planning, Strategic Planning, Operations, and System Operations.

3. Requirements

3.1 General

Engineers shall only utilize Vista switches that appear in a current material standard and have an active Stock Number.

Engineers shall verify the Vista switch's fault withstand capability is greater than the actual (and future) fault current the switch may be exposed to. Refer to Design Standard 9752.10 for more information.

Engineers shall request approval from Distribution Planning (in Engineering) far enough in advance to allow modification of switch choice.

standards coordinator	standards supervisor	unit director
John Shipek	John Shipek	Pamela S. Johnson

3. Requirements, continued

3.1 General, continued

Vista switches are now available in three distinct types:

- Manual
- Remote supervisory capable (with electronics included)
- Remote supervisory capable (with simply provision for electronics)

Manually controlled Vista switches consist of one major component. Remote supervisory (capable) Vista switches consist of two major components: the switch and a low voltage enclosure.

Remote supervisory (capable) switches are available with 5802 automatic switch control units and a fiber optic transceiver included or with simply provision for such electronics:

- Switches with electronics included are provided with basic software providing SCADA functionality to a system dispatcher (with an appropriate communication link). These switches have the capability to be upgraded with S&C Electric's IntelliTEAM II Restoration System software, making it possible to isolate a fault and restore service (to all but the faulted section of line) without the intervention of a system dispatcher. SCADA functionality is supported, but not required. Multiple switches are required to create a useful system. These switches are supplied with a single mode fiber-optic transceiver.
- Switches with simply provision for electronics are provided with a low voltage enclosure with space for future mounting of 5802 automatic switch control units to accommodate all motor operators, including space for future mounting of one transceiver. Switches are provided with a minimum of electronics necessary to operate the switch from the low voltage enclosure.

The idea behind offering this family of switchgear with SCADA capable electronics or simply provision for such electronics is to defer the purchase of expensive control and communication devices that won't be needed for at least five years. In five years, industry will certainly offer smaller, more powerful devices at a reduced cost. The most significant factor affecting when SCADA electronics may be utilized is when a firm and funded schedule for installing a fiber optic communications link is established.

It is not possible to upgrade a manually controlled Vista switch to be remote supervisory capable in the field. The switch must be removed from service and returned to the factory for this work.

Vista switches are equipped with 600 A bushings; only one T-body connector (and hence one cable) per phase, is allowed.

Engineers should be aware that even though Vista switches have Stock Numbers, each is specially made for Seattle City Light by the S&C Electric Company. Lead times can range between six and twelve months. Because an emergency replacement policy is awaiting development, there should be no expectation that a replacement Vista switch would be readily available, if one were needed.

Design engineers are encouraged to review the applicable material standard and/or consult S&C Electric's extensive on-line library for more information. If a non-standard configuration is required, please contact Standards for assistance.

3.2 Looped Radial

Vista switches are approved for use for:

- feeder tie/service
- services

The majority of feeder tie/services shall utilize 5-way or 6-way Vista switches; feeder in, feeder out, one optional spare, and three service taps. See Figure 1. Three-way or 4-way Vista switches may be used with approval.

3. Requirements, continued

3.2 Looped Radial, continued

Figure 1, 6-Way Vista Switch

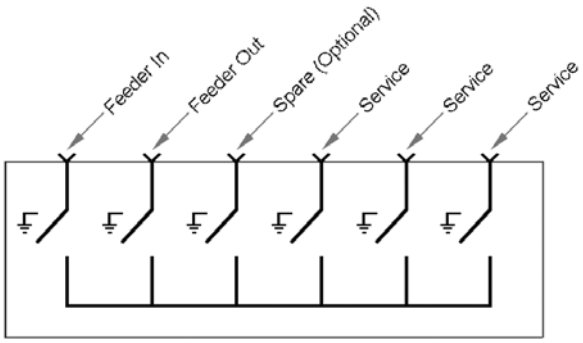

Transformers rated 500 to 2500 kVA require the use of molded current limiting fuses (MCLFs), where each three-phase set of MCLFs is installed downstream in its own vault.

Spare switch "ways" shall be terminated on a J-box located in its own vault.

Transformers rated 3000 kVA and above require the use of a Vista switch equipped with a vacuum bottle and programmable overcurrent control module. Refer to Stock Number 012673.

At the earliest stage, the Protection & Control Electrician Crew Chief shall be informed of any project utilizing a Vista switch with a programmable overcurrent control module.

Vista switches are approved for use in the following locations, listed in order of preference:

- Padmounted (easement recommended)
- In-building vaults
- Sidewalk vaults (also known as 101010 vaults)

Padmounted Vista switches are typically installed over 818 ring vaults.

Manually controlled Vista switches are approved for installation in 101010 sidewalk vaults. A sidewalk curb bulb may be required in these situations.

Remote supervisory (capable) Vista switches are ***not*** appropriate for installation in sidewalk vaults. This is because, at present, no vault design that will both fit in a sidewalk and accommodate the wider and taller remote supervisory (capable) Vista switches has been proven.

Each 6-way, remote supervisory (capable) Vista switch requires a 60-inch (H) by 60-inch (W) by 16-inch (D) low voltage enclosure. For Vista switches installed in dry, walk-in vaults the low voltage enclosure is wall-mounted outside the vault. For Vista switches installed in wet applications, the low voltage enclosure is installed above grade, on a provided 12-inch pedestal.

Each low voltage enclosure requires 120 Vac.

Low voltage enclosures must be located such that a prefabricated 45-foot long control cable can reach the enclosure from the switch. This control cable is hard-wired to the switch.

Maintain a minimum clear space of 30 inches in front for door swing.

3.3 Network

Vista switches are approved for use for:

- Network feeder sectionalizing at the point where the circuit splits into a wye
- Isolating feeder from customer network transformer; typically installed in sets, one per transformer

Switches are operated with an S&C remote (portable) motor operator.

4. Approval

Engineers shall adhere to the latest process established by Seattle City Light's directors and/or officers pertaining to obtaining approval before applying switchgear used to construct the distribution system.

This process has and will change over time. For historical perspective, refer to Appendix - CSED Officer Christopher Heimgartner's email, dated February 3, 2009, for the first approval process to be established.

The above-mentioned process will likely include these basic elements:

- Requests for both Looped Radial and Network application approvals will be directed to a central authority. As of April 2011, Distribution Planning (in Engineering) will act the clearing house for all Vista switch application approvals.

4. Approval, continued

- The design engineer will be asked to provide:
  - Design Engineer's name
  - Feeder number
  - Project name and address
  - Project scope
  - In service need by date
  - One-line diagram
  - Stock Number(s) and brief description(s) of proposed switch(s)
  - If remote supervisory capable, description and schedule for communications connection
  - If remote supervisory capable, whether switch will be with electronics included or with simply provision for electronics
  - Function of each switch "way" (feeder in, feeder out, tie, service, or spare)
  - Installation type (padmount, in-building vault, or sidewalk vault)
  - Special considerations or system needs
- Distribution Planning (in Engineering) will review the request and approve the application (or recommend an alternative switch and/or design) within a specified period of time.
- Distribution Planning will maintain informal contact with Standards to ensure technical rulings are handled in a consistent and accurate manner.

To make the process more efficient, engineers are encouraged to:

- Request approval far enough in advance to allow alternate designs be considered should that become necessary; the lead time for Vista switchgear can range from six to twelve months.
- Confine switch choices to those with active Stock Numbers.
- Discuss application at a Standards Committee meeting before requesting formal approval.

5. Reference

4501.61, "15.5 kV, Three-Phase, SF6, Multi-Purpose Switchgear, Manually Controlled;" Material Standard; SCL

4501.65, "29 kV, Three-Phase, SF6, Multi-Purpose, Distribution Switchgear, Manually Controlled;" Material Standard; SCL

4501.67, "29 kV, Three-Phase, SF6, Multi-Purpose, Distribution Switchgear, Remote Supervisory (Capable);" Material Standard; SCL

9752.10, "Fault Current Along a Representative 26 kV, Looped Radial Feeder;" Design Standard; SCL

Christopher Heimgartner email, dated February 3, 2009 (Appendix)

Shipek, John; SCL engineer, subject matter expert, and co-originator of 9202.14 (john.shipek@seattle.gov)

Siddiqi, Uzma; SCL engineer, subject matter expert, and co-originator of 9202.14 (uzma.siddiqi@seattle.gov)

Appendix, Christopher Heimgartner email

From: Christopher Heimgartner
To: Barnett, John; DeVenaro, Karen; Enright, Kelly; Fulton, Dix; Gau, Dennis; Johnson, Pamela; Krupa, Pawel; Robb, Nancy; Serra, Roger; Soleibe, Demis; Wheelock, Dana; Ziemianek, Bernie
Date: 2/3/2009 12:57:45 PM
Subject: SCADA Switch Installations

Good afternoon everyone,

In the last nearly thirty years I have had the privilege of helping the electric industry automate. Rolling out new software or SCADA devices is one of the highlights of anybody's career. Here we are talking about a full court press and that is really exciting: AMI, SCADA, OMS, WAMS..... and all leading to that grail of the utility world, the Smart Grid.

The problem is that we can get in front of ourselves and end up dissipating time and money without advancing the utility in a single coherent direction.

To help avoid at least a part of that, I want to funnel all work to establish SCADA switches in the field through our planning group in Asset Management. Pam has proposed a simple process for all SCADA work that is not currently in construction: Send an e-mail to Margaret Kirk with the following information:

* Design Engineer Name
* Feeder number/name
* Project location
* Work planned at that location
* Switch proposed and if an order has been placed
* Any special considerations or system needs

An answer will be provided within 7 working days. Appeals are reserved first to Pam and then to my office.

Please ensure that this process is implemented at once and thank you for your assistance.

Chris

CC: Gallo, Andrew; Johnson, DaVonna; Kern, Steve; Lum, Roy; Yang, Sung

PADMOUNT VISTA SWITCH REQUIREMENTS

1. Scope

This Standard presents the minimum design requirements for the installation of S&C Electric's Vista Padmount switchgear on Seattle City Light's, 26.4 kV, Looped Radial underground distribution system.

This standard currently only addresses 2-way and 6-way vista switch pad and vault requirements. Other vista switch varieties and remote supervisory cabinet will be addressed in future revisions.

Network switchgear application and requirements, underground distribution design, protection coordination, and cable and conduit selection are outside the scope of this Standard.

2. Application

This Standard provides engineers the minimum requirements to design a safe, reliable, cost-effective, operable and maintainable system.

3. General Requirements

3.1 See switch specifications for exact dimensions and anchor bolt details.

3.2 If there is vehicular traffic, physical protection is required. Bollards are typically used.

3.3 All switch positions shall be energized with spare positions terminated on a J-Box in another vault.

4. 2-Way Vista Switch Requirements

4.1 The switch shall be installed on a pad with minimum dimensions of 91 by 77 inches.

4.2 There shall be a minimum 36 inches of straight cable from the bushing to first bend in the cable

4.3 The opening for cables shall be rectangular with the minimum dimension of 34 by 6 inches.

4.4 The opening for cables shall be offset to line-up with bushings if the opening does not run the entire width of the switch.

standards coordinator	standards supervisor	unit director
Curtis Lu	John Shipek	Pamela S. Johnson

4. 2-Way Vista Switch Requirements, continued

Figure 4a, 2-Way Vista Switch Elevation

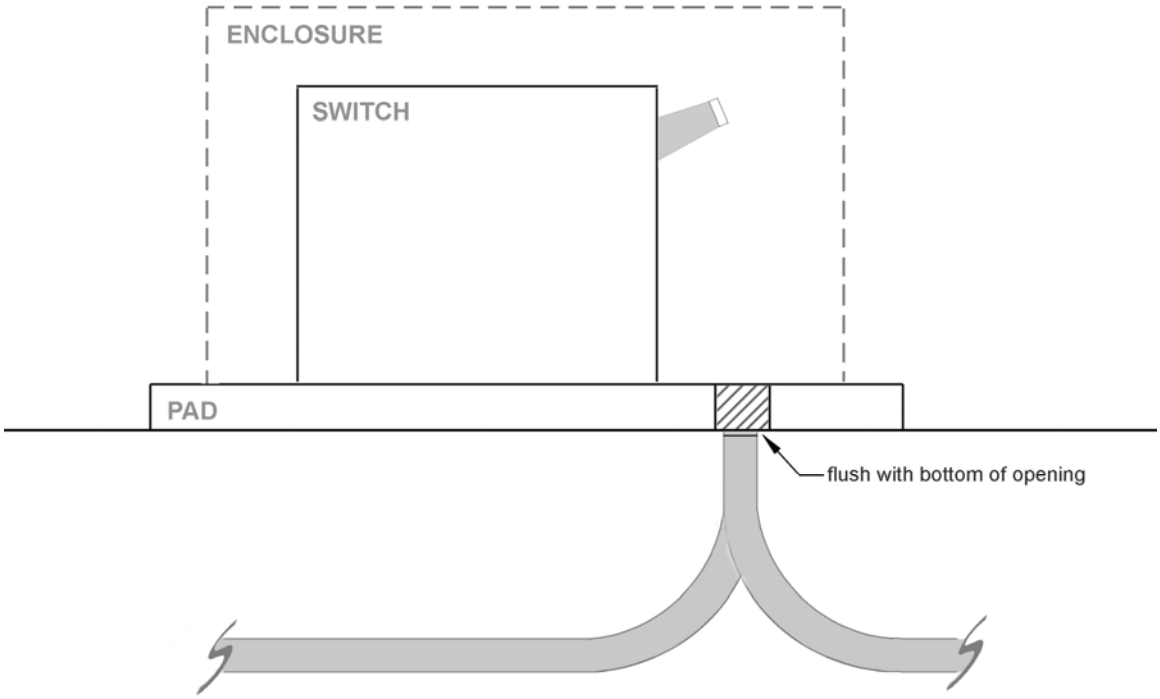

Figure 4b, 2-Way Vista Switch Layout

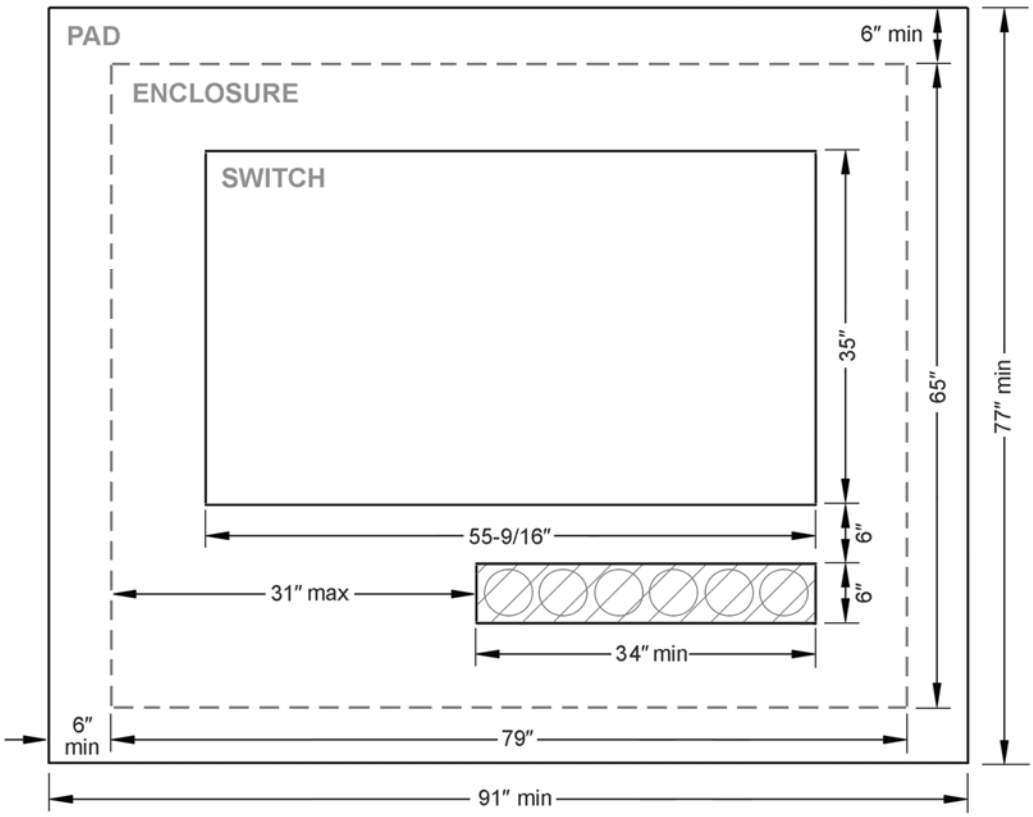

5. 6-Way Vista Switch Requirements

Figure 5, 6-Way Vista Switch Layout

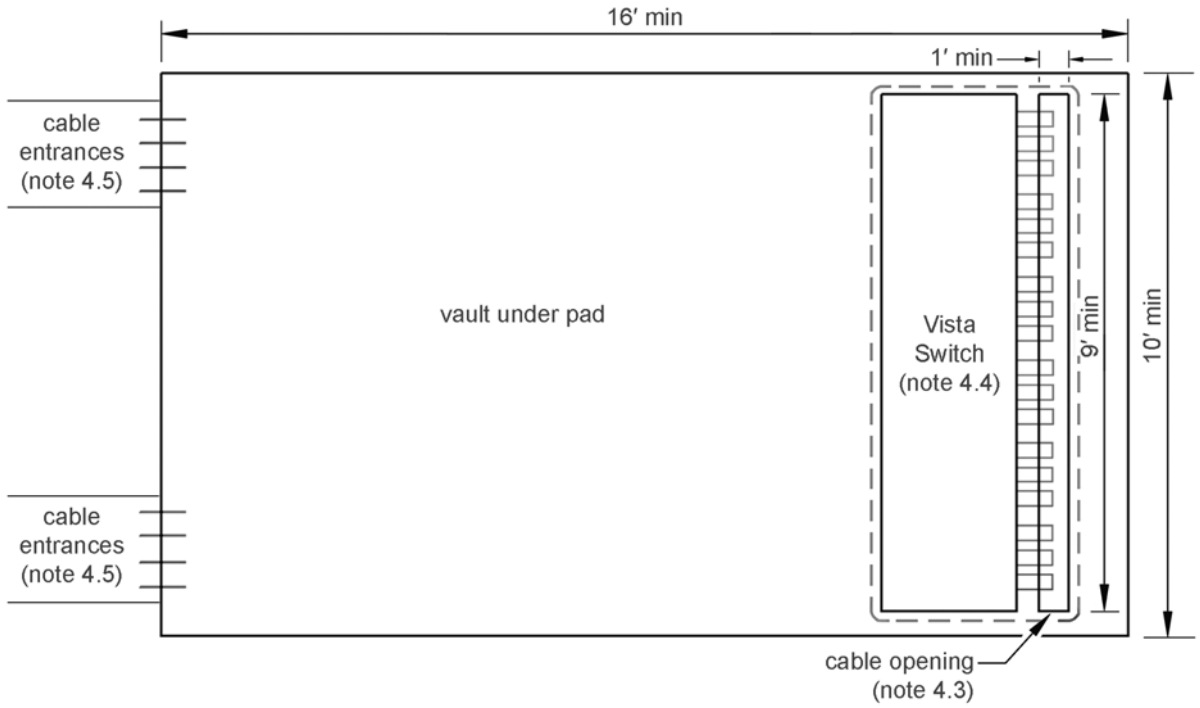

5.1 The switch shall be installed on a vault with minimum dimensions of 16 feet long by 10 feet wide by 8 feet high.

5.2 There shall be a minimum 54 inches of straight cable from the bushing to first bend in the cable.

5.3 The opening for cables shall be rectangular with the minimum dimension of 9 by 1 feet.

5.4 The switch shall be installed on the pad across the width (shorter side) of vault with elbows facing away from cable entrance.

5.5 The switch shall be located at the end of the vault away from the cable entrance.

6. References

4501.65; "29 kV, Three-Phase, SF6, Multi-Purpose, Distribution Switchgear, Manually Controlled"; Material Standard; SCL

4501.67; "29 kV, Three-Phase, SF6, Multipurpose, Distribution Switchgear, Remote Supervisory (Capable)"; Material Standard; SCL

9202.14; "Vista Switch Design Requirements, 26 kV Looped Radial System"; Design Standard; SCL

Detter, Chris; SCL Standards Engineer, subject matter expert (chris.detter@seattle.gov)

Lu, Curtis; SCL Standards Engineer, subject matter expert, originator of 9202.21 (curtis.lu@seattle.gov)

ELECTRIC POWER CABLE AND CONDUIT SELECTION

1. Scope

This design standard identifies the preferred electric power cable and conduit to be used in a given application. This standard is applicable to belowground, sweep, and riser pole conduit selections for Seattle City Light's 26.4 kV grounded wye Looped Radial system, all Network systems, and station get-a-ways.

The identification of preferred conduit for use inside substation and generating facilities is outside the scope of this standard.

The identification of preferred conduit for use with control and communications cable, including fiber optic cable, is outside the scope of this standard.

Discussions or requirements regarding maximum run lengths, pulling tensions, sidewall pressure, backfill, clearance, etc. are outside the scope of this standard. Some of these topics are discussed in detail in Design Standard 9271.05 - Cable Pulling Engineering Fundamentals.

2. Application

This standard provides engineers with design information regarding the selection of belowground conduit, sweep, and riser pole conduit containing electric power cable.

While the primary focus of this standard is new construction, portions may still be applicable to emergency repair or planned maintenance activities.

The purpose of this standard is to:

- Promote the standardization of material across org units and system boundaries
- Simplify design work by pairing commonly used electric power cables and applications with proven conduit choices

Conduit design decisions are based on many factors:

- Cable choice
- Cost
- Strength
- Maximum operating temperature
- Weight
- Coefficient of friction
- Resistance to burn through
- Jam ratio
- Resistance to impact/shape retention after impact
- Conductivity
- Corrosion resistance
- Ability to field bend
- Standardization/consolidation of material choices
- Future capacity expansion

This standard attempts to take each of these factors into account. The cable and conduit pairings in this standard have been proven, through experience and calculation, to be the best pairs for each given application.

3. Definitions

AG - Above ground

GRS - Galvanized rigid steel

ID - Inside diameter

IPS - Iron pipe standard

Jam ratio - Ratio of conduit inner diameter (D) to the cable diameter (d)

Schedule 40 – Represents the thickness of pipe wall for PVC conduit, it is thinner than Schedule 80

Schedule 80 - Represents the thickness of pipe wall for PVC conduit, it is thicker than Schedule 40

Sweep – Large radius bend in conduit

standards coordinator	standards supervisor	unit director
Devyn Byrnes	John Shipek	Darnell Cola

4. Guiding Design Principals

Conduit will be applied in a manner that is consistent with Design Standard 9271.05 - Cable Pulling Engineering Fundamentals.

Standardization of conduit types and sizes across org units and system boundaries offers great value and efficiency in a variety of ways and should be promoted whenever possible.

Seattle City Light design engineers should be specifying the same given electric power cable, employed in the same application, be installed in the same size and type of conduit.

5. Preferred Cable and Belowground Conduit Pairings

5.1, 26.4 KV Looped Radial System

	Cable		Conduit			
Application	Stock No	Description	Type	Size, IPS	Straight Section Stock No	Notes
station get-away & main feeder	012102	28 kV, 1000 kcmil, 1/C	fiberglass	5	012808	
main feeder	012101	28 kV, 750 kcmil, 1/C	fiberglass	5	012808	
large service	012100	28 kV, 500 kcmil, 1/C	fiberglass	5	012808	1
large service	012100	28 kV, 500 kcmil, 1/C	Schd 40 PVC	4	734523	2
large service	012099	28 kV, 350 kcmil, 1/C	Schd 40 PVC	4	734523	
residential distribution	012098	28 kV, 1/0 AWG, 1/C+1/N, jacketed, single-phase	Schd 40 PVC	3	734532	3, 4
mixed use	012098	28 kV, 1/0 AWG, 1/C+1/N, jacketed, three-phase	Schd 40 PVC	4	734523	3
basic residential distribution	602025	28 kV, 1/0 AWG, 1/C+1/N, bare, single-phase	Schd 40 PVC	3	734532	3, 4
mixed use	602025	28 kV, 1/0 AWG, 1/C+1/N, bare, three-phase	Schd 40 PVC	4	734523	
commercial service	605186	600 V, 500 kcmil, quad	Schd 40 PVC	4	734523	
commercial service	605084	600 V, 500 kcmil, triplex	Schd 40 PVC	4	734523	
commercial service	605176	600 V, 350 kcmil, quad	Schd 40 PVC	4	734523	
commercial service	605076	600 V, 350 kcmil, triplex	Schd 40 PVC	3	734532	
residential service	605141	600 V, 4/0 AWG, quad	Schd 40 PVC	3	734532	
residential service	605040	600 V, 4/0 AWG, triplex	Schd 40 PVC	3	734532	

1. Anticipating if circuit becomes a feeder one day
2. Circuit will not become a feeder in the future
3. In areas prone to corrosion or DC offset near electrical rail/trolley grounding systems
4. If the circuit in the future may require three-phase, use 4-inch Schedule 40 PVC

5. Preferred Cable and Belowground Conduit Pairings, continued

5.2, 13.8 KV Delta Network System (Downtown)

	Cable		Conduit		
Application	Stock No	Description	Type	Size, IPS	Straight Section Stock No
feeder, with few bends	623670	15 kV, 1000 kcmil, 3-1/C	Schd 40 PVC	5	734524
feeder, with many bends	623670	15 kV, 1000 kcmil, 3-1/C	fiberglass	5	734524
feeder, with many bends	012735	15 kV, 500 kcmil, 3-1/C	fiberglass	5	012808

5.3, 26.4 KV Grounded Wye Network System (First Hill)

	Cable		Conduit		
Application	Stock No	Description	Type	Size, IPS	Straight Section Stock No
feeder	012735	15 kV, 500 kcmil, 3-1/C	Schd 40 PVC	5	734524
primary service	613523	15 kV, #1 AWG, 3/C	Schd 40 PVC	4	734523
primary service	613526	15 kV, 3/0 AWG, 3/C	Schd 40 PVC	4	734523
secondary service, bus tie	613740	600 V, 500 kcmil, 1/C, three-phase, w/ground	Schd 40 PVC	5	734524
secondary service	613740	600 V, 500 kcmil, 1/C, three-phase, w/ground	Schd 40 PVC	4	734523
streetlight	640450	600 V, #8 AWG, triplex	Schd 40 PVC	2	734530

6. Preferred Sweep Applications

Design engineers often call for the sweeps be of a different type of material than the belowground straight sections. One basis for this apparent mismatch is to better resist burn-through during the pulling process.

Another valid reason for specifying zinc-coated steel is the ability to fabricate field bends from straight stock. Field bending elbows allows for custom angles and better nesting of multiple runs.

Straight Section			Sweep	
Type	Size, IPS	Application	Type	Size, IPS
Schedule 40 PVC	any	single straight section	zinc-coated steel	same as straight
Schedule 40 PVC	any	Network duct bank	zinc-coated steel	same as straight
Schedule 40 PVC	any	26.4 kV Looped Radial duct bank	zinc-coated steel	same as straight
fiberglass	any	single straight section	fiberglass	same as straight
fiberglass	any	Network duct bank	zinc-coated steel	same as straight
fiberglass	any	26.4 Looped Radial duct bank	fiberglass	same as straight
various	5 in	vertical sweep leading up to riser pole	steel	5 in (Stock No 734826)

6. Preferred Sweep Applications, continued

As indicated above, 5-inch diameter, 60-inch radius, zinc-coated steel vertical sweeps leading up to a riser pole are available prefabricated as Stock Number 734826.

Over time, as experience and confidence with Fiberglass sweeps increases, the preference for zinc-coated steel elbows may diminish in certain situations.

7. Riser Pole Conduit Requirements

Some situations call for the riser pole conduit to be of a different type of conduit than the belowground straight sections. The basis for this apparent mismatch is to meet national safety code requirements, which require the above ground sections be able to withstand impacts from motor vehicles, etc.

	Size, IPS, in	Stock No
Belowground Conduit		
fiberglass	5	012808
Riser Pole Conduit		
fiberglass	5	012808
or, where required		
steel	5	734747

8. References

7015.05; "Schedule 40 PVC Conduit and Fittings"; *Material Standard*; SCL

7020.05; "Schedule 80 PVC Conduit"; *Material Standard*; SCL

7025.05; "Fiberglass Conduit and Fittings, Medium Wall, Five-Inch IPS"; *Material Standard*; SCL

7050.05; "Zinc-Coated Steel Conduit and Fittings"; *Material Standard*; SCL

9271.05; "Cable Pulling Engineering Fundamentals"; *Design Standard*; SCL

9650.03; "Properties of 600 Volt and Weather-Proof Cables"; *Design Standard*; SCL

9660.04; "Properties of Medium Voltage Cables"; *Design Standard*; SCL

Byrnes, Devyn; SCL Standards Student Intern, (devyn.byrnes@seattle.gov)

Hall, Alan; SCL Engineer and subject matter expert of 9220.05 (alan.hall@seattle.gov)

NDK-10; "Installation of Nonmetallic Conduit with FTB Concrete Encasement"; *Construction Guidelines*; SCL

Shipek, John; SCL Standards Principal Engineer, subject matter expert, and co-originator of 9220.05 (john.shipek@seattle.gov)

U7-10/NDK-70; "Conduit Risers on Poles"; *Construction Guidelines*; SCL

U7-10.1/NDK-80; "Conduit Riser – 600 Volts Pole Base Detail"; *Construction Guidelines*; SCL

U7-10.2/NDK-90; "Primary Conduit Riser Pole Base Detail"; *Construction Guidelines*; SCL

FIELD IDENTIFICATION OF DUCT BANKS

1. Table of Contents

1. Table of Contents 1
2. Scope 1
3. Embedded Identification Principles 2
4. Policy 2
5. Historical Background 3
6. Material Requirements 3
7. References 4

2. Scope

This Design Standard defines the required method for marking duct banks during installation to allow quick and sure identification of SCL duct banks. This is primarily achieved with the use of red dyed encasement material around SCL duct banks and service conduits containing high-voltage cable. Red dye serves as a method to distinguish underground power utility facilities from other underground installation during future excavations.

standards coordinator	standards supervisor	unit director
Chris Detter	John Shipek	Pam S. Johnson

3. Embedded Identification Principles

Underground power presents the highest risk of injury to workers of any utility installed underground in the right of way, and accidental cable dig-ins are among the most common causes of power outages in underground systems. Utility mapping systems nationwide are not sufficiently accurate to ensure that all utilities are accurately located prior to excavation, and utilities on private property are not identified by One-Call locate marks. Supplementing One-Call marks with embedded identification of power conduits has proven to be beneficial to worker safety.

3.1 Primary (High Voltage) Conduits:

SCL assumes authority and control over the primary conduits and encasement surrounding them in the right-of-way, on private property, and inside a building, although in the building both are legally owned by the building owner. SCL has an obligation to protect the public from the unique and lethal hazard posed by our high voltage (HV) primary conductors. SCL desires to prevent excavating or drilling into the primary conduits and to guard the structural integrity of the conduits and their encasement.

3.2 Secondary, Service (Low Voltage), and Communication Conduits:

Low-voltage (LV) contact is also hazardous, but SCL does not have a history of injury or property damage associated with low-voltage contact incidents. In addition, the workers we wish to protect may come to regard red-dyed encasement as less of a hazard if it is over-used or is installed capriciously. Therefore, low-voltage conduits and SCL communications conduits may be excluded from red-dyed encasement.

When installing a new underground system, the cost of encasing the low-voltage and primary conduits in the same duct bank may be less than the cost of installing the HV conduit in red and the LV conduit in gray.

There is no harm done by including LV conduits where red dye is already required in the duct bank. It is permissible for any or all of these classes of SCL-owned conduit to be placed alongside primary conduit and encased with red-dyed material.

3.3 Intended Message:

Red-dyed encasement is intended to communicate the message, ***"Danger! High-voltage power cables inside! Further excavation may result in serious injury or death."*** SCL wants workers from other agencies to respond to red dye by calling SCL and asking for assistance.

3.4 Detectable Marking Tape:

Detectable marking tape shall be installed above duct banks and individual conduits in the right-of-way. Service conduits do not require detectable tape. Foreign utilities shall be excluded from red-dyed encasement.

Detectable marking tape has a conductive strip embedded in the tape. A cable locator worker can induce a detectable pulse on the strip by placing a pulse generator near it.

Detectable marking tape and pulling tape can aid cable locators in marking duct bank locations, especially where the duct bank has no conductors installed. They are not an adequate substitute for red-dyed encasement.

Note: Detectable pulling tape also has an embedded conductor, and it can be pulled into new conduits. SCL preference is to standardize installation of marking tape on top of new duct banks. It is less expensive and provides additional warning to non-electrical workers excavating in the right-of-way.

3.5 Exceptions:

Exceptions to these principles must be documented by a memo to SCL Engineering Standards, justifying the exception and mitigating present and future public safety hazards. Any exception must be granted by SCL Engineering, and the work must be directly overseen by an SCL Safety Standby crew.

3.6 Consistent Application

This Design Standard shall be applied and considered in all installations of SCL-owned conduit installed for use in SCL's distribution and transmission systems. Red dye in duct banks benefits public safety by warning workers excavating around SCL duct banks that a potentially dangerous exposure to shock hazard exists, before a cable is dug up and electrical contact is made. **Consistent application** of this Design Standard is critical to reaping the benefit to public safety.

4. Policy

4.1 Red Encasement for Primary Conduits:

All SCL distribution system duct banks and each individual conduit that are intended for primary voltage conductors and energized at 600 volts or more phase-to-phase shall be encased in red-dyed concrete or red-dyed high-strength FTB in all locations – right of way, private property, and easements. Red dye is not required in grout used to inject the casings of bored/ augured duct banks. All primary service conduits require red-dyed encasement.

4.2 Removal of Red Encasement:

To protect unqualified workers, red concrete encountered during excavation in the right-of-way or on private property shall be removed only by electrical journey workers working for Seattle City Light.

The SCL Power Dispatcher may grant permission to an unqualified worker to remove, or directly oversee removal of, red encasement if a URD crew chief has verified that all conduits within the encasement are empty.

4.3 Secondary & SCL Communication Conduits:

SCL distribution system conduits intended for secondary voltage conductors energized at less than 600 volts phase-to-phase only, or SCL communication system cables only, are not required to have red-dyed encasement. These non-primary voltage conduits may be encased with red dye when installed along with a primary voltage duct bank, or they may be installed separately for non-dyed encasement (often referred to as "gray" encasement, e.g. gray FTB, gray concrete).

4.4 Primary Conduits Inside Buildings:

To protect unqualified workers, primary conduits inside buildings shall be plainly identified on the exterior of the required concrete encasement where such encasement passes through any accessible area. Red dye is allowed as an acceptable method of identification, but not required inside buildings.

Surface mounting brackets or drillings of any kind are prohibited on primary conduit encasement. Surface-mounted conduits may cross primary encasement without attachment. Even one exception may encourage future drillings into encasement without contact to SCL.

Foreign Utilities: Only conduits owned by SCL shall be allowed in red-dyed encasement material. Other utilities, including non-SCL streetlight conduits, shall be installed outside of red-dyed encasement.

4.4 Backfill:

SCL backfill above encasement shall not use red dyed materials.

5. Historical Background

Red dye was first introduced to SCL duct banks in January 2000. Duct banks installed before then may or may not have primary conductors installed in gray concrete encasement. Enforcement of red dye encasement ramped up from that time forward. Primary service conduits have not been required to use red dye enforcement of this standard.

6. Material Requirements

Red dye material for red encasement shall comply with ASTM C979, Pigment for Integrally Colored Concrete. Iron oxide red dye shall be added to concrete and high-strength fluidized thermal backfill at a concentration of 4 lbs/cu yd. to accomplish a sufficiently red encasement material. Red dye is suitable for cementious materials such as concrete, FTB and CDF. It is not suitable for use in slurries and dry-pack mixes.

7. References

"Standard Specification for Pigments for Integrally Colored Concrete"; ASTM C979-05

U2-11/NDK-20; "Installation of Nonmetallic Conduit with Concrete or FTB Encasement"; SCL Construction Guidelines

Detter, Christopher; SCL Standards Engineer, subject matter expert, originator of 9220.50

TRENCH AND DUCT BANK DESIGN

1. Scope

This design standard covers the sizing and placement of conduit in a duct bank and the size and placement of a duct bank in a trench for both Looped Radial and Network areas.

This standard only covers underground feeder and distribution runs and does not cover primary and secondary service runs.

2. Application

This Design Standard provides typical conduit configuration and duct bank placement and this Design Standard applies throughout the SCL service area.

This Design Standard is intended for use by SCL engineering, customer service, inspecting, reviewing, and operations personnel.

3. Definitions

The following definitions are taken directly from the Authoritative Dictionary of IEEE Standards Terms and similar accredited industry references.

- Backfill – materials such as sand, crushed stone, or soil, that are placed to fill an excavation.
- Conduit – a structure containing one or more ducts.
- Controlled Density Fill (CDF) or Controlled Low Strength Material (CLSM) – a self-compacted cementitious material used primarily as a substitute for compacted backfill.
- Duct – a single enclosed raceway for conductors or cables.
- Duct bank – an arrangement of conduit providing one or more continuous ducts between two points.
- Encasement – material used to encase a duct bank.
- Fluidized Thermal Backfill (FTB) – a formulated backfill to meet thermal resistivity, thermal stability, strength, and flow criteria.
- Raceway – a channel designed expressly and used solely holding conductors.

For clarification and comparison (refer to Figure 3): A duct bank is comprised of conduits. A conduit is comprised of one or more ducts. A duct is comprised of a raceway.

Figure 3

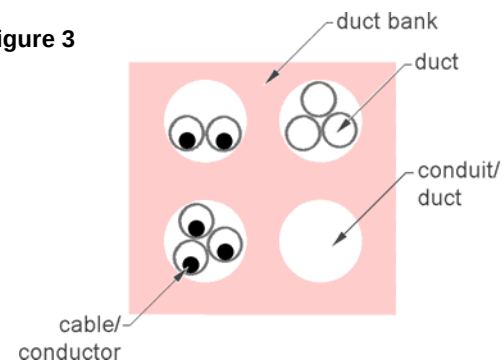

At SCL, our electrical conduit consists of only one duct. Therefore, the term conduit and duct are used interchangeably by SCL engineers and crew.

4. Design Details

4.1 Encased Duct Bank

Encased duct banks are designed for the protection of conduit runs from accidental penetration and to dissipate heat. Duct banks include conduits for feeders, distribution, and communications in one solid encasement. Streetlight conduits are to be placed on top of the encasement for easy maintenance access. Conduits in a duct bank are to be arranged from largest on the bottom to the smallest on the top (see Configurations and Dimensions) and seated on plastic spacers. Reinforcement in duct banks is only necessary if there is a need for structural support.

standards coordinator	standards supervisor	unit director
Curtis Lu	John Shipek	Darnell Cola

4. Design Details, continued

4.2 Trench

The trench shall be large enough to contain the entire duct bank and adhere to the maximum spacing of 6 inches allowed the sides and the minimum cover depth of 36 inches.

5. Sizing

5.1 Conduits

Conduit Size, in	Use
2	streetlights
3	communications/ local distribution
4	local distribution
5	feeders

5.2 Encasement

All encasement shall be red in color.

Encasement is used to protect the conduits in a duct bank and to allow for dissipation of heat generated by loaded cables.

The material chosen maximizes heat dissipation while providing maximum protection.

Use the material specified that corresponds with the largest conduit in the duct bank.

Use the material specified that corresponds with the largest conduit in the duct bank.

Conduit Size, in	Material
4 or smaller	high strength concrete
5 or larger	high strength fluidized thermal backfill (HS FTB)

5.3 Backfill

Backfill is used to restore the trench back to grade while allowing for dissipation of heat.

Use the material specified that corresponds with the largest conduit in the duct bank.

Conduit Size, in	Material
4 or smaller	controlled density fill (CDF)
5 or larger	low strength fluidized thermal backfill (LS FTB)

6. Configurations and Dimensions

Figure 6.1, Network **Figure 6.2,** Feeder **Figure 6.3,** Distribution

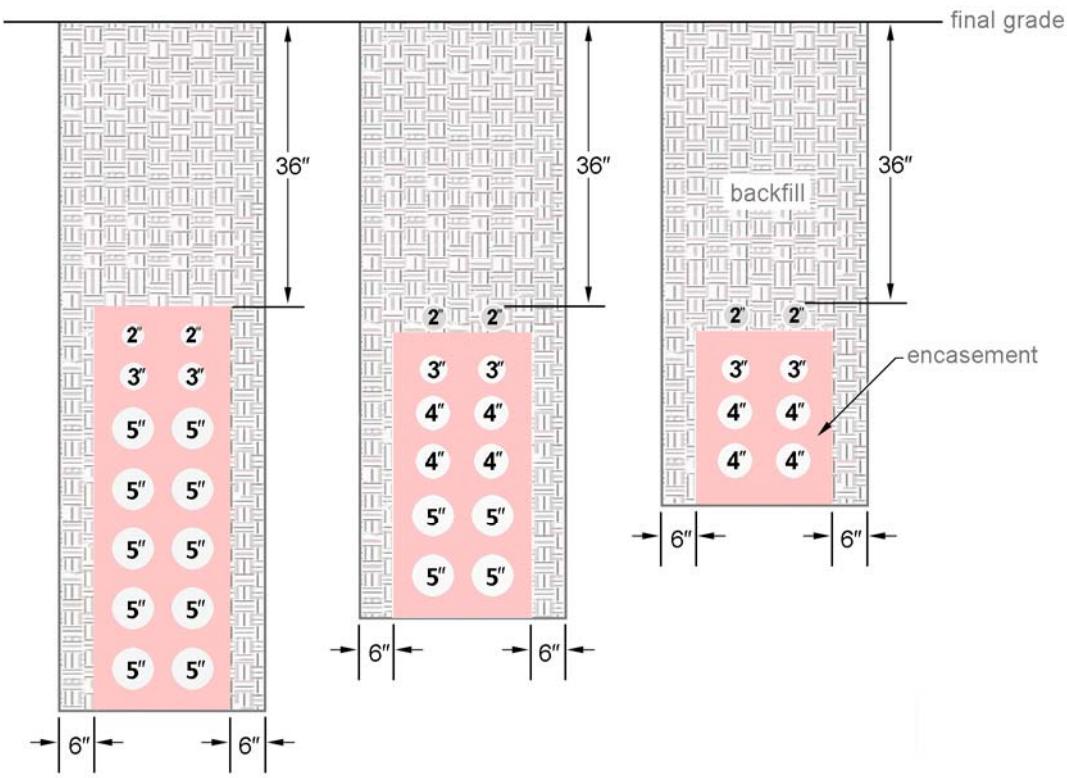

7. References

7150.00; "Fluidized Thermal Backfills"**;** SCL Material Standard

7346.80; "Spacers, Plastic, Nonmetallic Conduit"**;** SCL Material Standard

9220.05; "Electric Power Cable and Conduit Selection"**;** SCL Design Standard

9220.50; "Field Identification of Duct Banks"**;** SCL Design Standard

Hall, Alan; SCL Engineer, subject matter expert for 9221.50 (alan.hall@seattle.gov)

Lu, Curtis; SCL Standards Engineer, subject matter expert and originator of Design Standard 9221.50 (curtis.lu@seattle.gov)

Russo, Dave; SCL Engineer, subject matter expert for 9221.50 (dave.russo@seattle.gov)

TRANSFORMER SECONDARY CONNECTIONS

1. Scope

This design standard covers the sizing and placement of a transformer's secondary connections. The sizing and placement will include cables and conduits connecting a transformer to a customer panel or a tap box. A tap box is required when the number of customer cables exceed the number of holes on the secondary spade.

This standard may be used with both padmount and commercial subway units.

When directly connecting from a customer panel, the customer is responsible for sizing cables and conduits based on NEC requirements.

2. Application

This Design Standard provides cable and conduit sizing tables and determination of responsibility.

This Design Standard applies throughout the SCL service area.

This Design Standard is intended for use by SCL engineering, customer service, inspecting, reviewing, and operations personnel.

This document is for internal use only.

3. Design Details

The tables in this Standard provide a guide to determining the size of secondary cable that is required for the corresponding transformer. There may be more than one option. Customers are responsible for sizing their own secondary table per NEC. See Responsibilities section (5) for responsibility break down.

Cable de-rating was taken into consideration and NEC table B.310.7 was used for 6 conduits or less while the follow parameters were used for 8 and 10 conduit runs:

- Conduits are direct buried (earth backfill)
- Earth temperature (rho) is 90°C (high soil study temperature)
- Air temperature (rho) is 20°C (summer critical temperature)
- Load Factor is 80 percent
- 4 cable per conduit (3 phases, 1 neutral)
- Conduit layout as seen in Figure 6.4
- Schedule 40 PVC except fiberglass for 5-inch conduits

USAmp+ 3.2.0.5 software was used to run the simulations for 8 and 10 conduit banks.

In order to determine the cable requirements, the transformer ampacity is divided by the number of cables to determine the cable ampacity needed. Then, to determine the cable size, this cable ampacity is cross-referenced to the de-rated cable ampacities provided by the NEC or by simulation results.

4. Sizing

The following steps are used to determine sizing and the need for a tap box or vault:

4.1 Based on service application, the SCL engineer determines the transformer and size based on the customer load and load factor.

4.2 Once transformer is determined, customer is informed by SCL of

a. maximum cables (limited by the amount holes on the secondary spade)

b. cable options (table 8-1 of RESC).

4.3 Customer will inform SCL if maximum cables are sufficient for NEC requirements. If not, a tap box is a recommended as a solution. An alternate solution is multiple connectors in a vault.

4.4 If a tap box or vault is required, SCL engineer will determine:

a. number of conduit needed from tap box or vault to transformer

b. conduit size and type

c. number of cables from tap box or vault to transformer

c. cable size

5. Responsibilities

5.1 Standard Installation:

SCL – Primary cable, transformer, transformer terminations

Customer – Secondary cable, all conduits, transformer pad, grounding

5.2 Installation with Tap Box or Vault:

SCL – Primary cable, transformer, transformer terminations, terminations and cable from transformer to tap box or vault

Customer – Secondary cable, all conduits, transformer pad, grounding, tap box or vault secondary cable termination in tap box

6. Configurations

Figure 6.1: Direct Connection

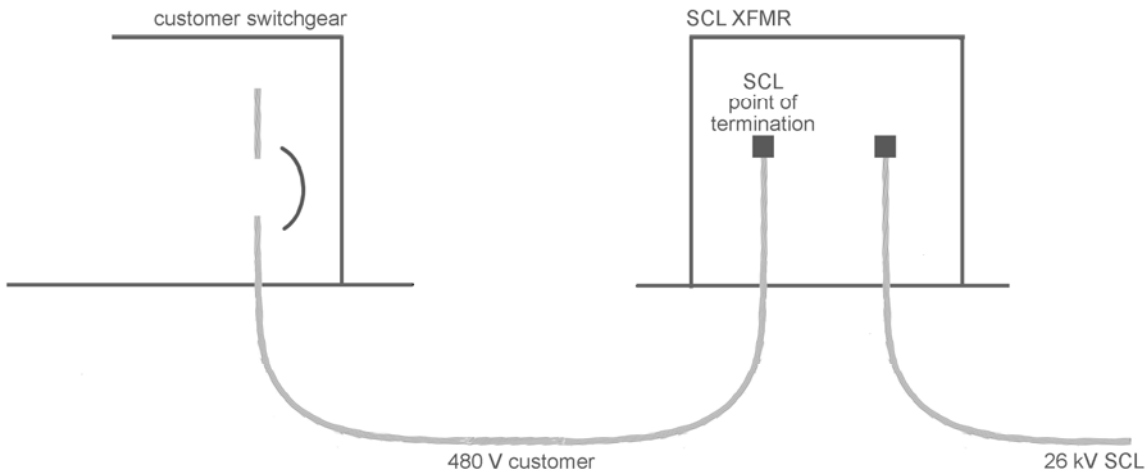

Figure 6.2: Tap Box

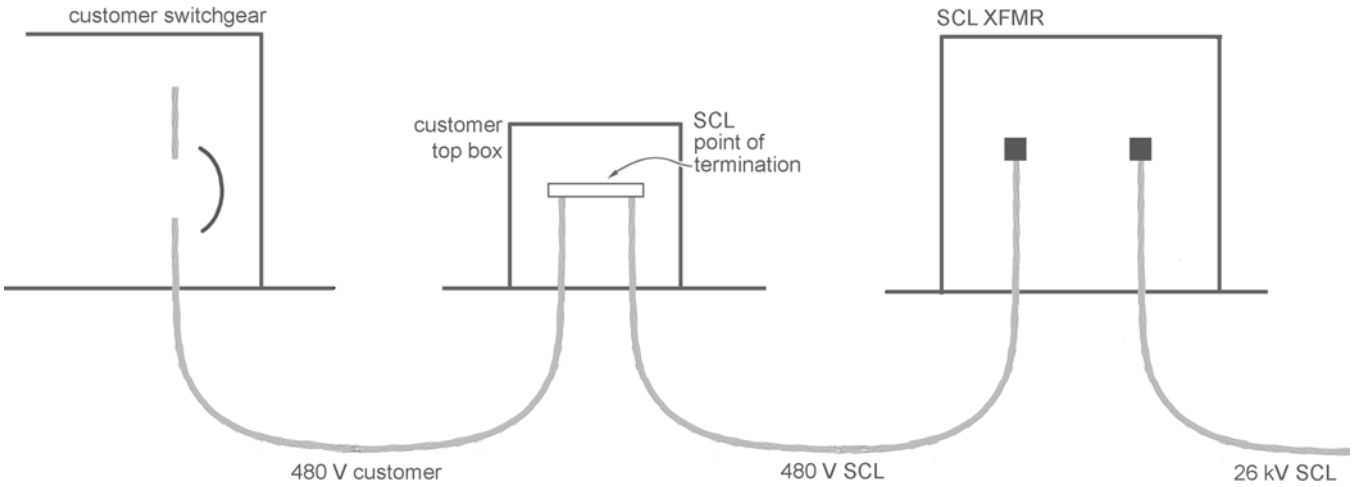

6. Configurations, continued

Figure 6.3: Vault

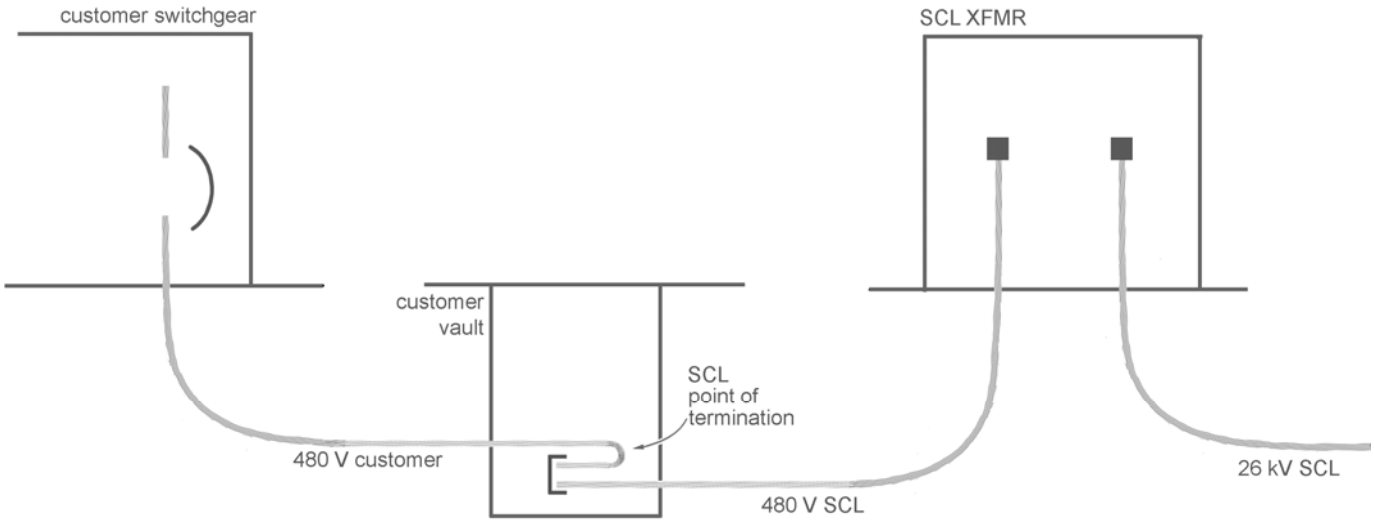

Figure 6.4: Conduit Layout

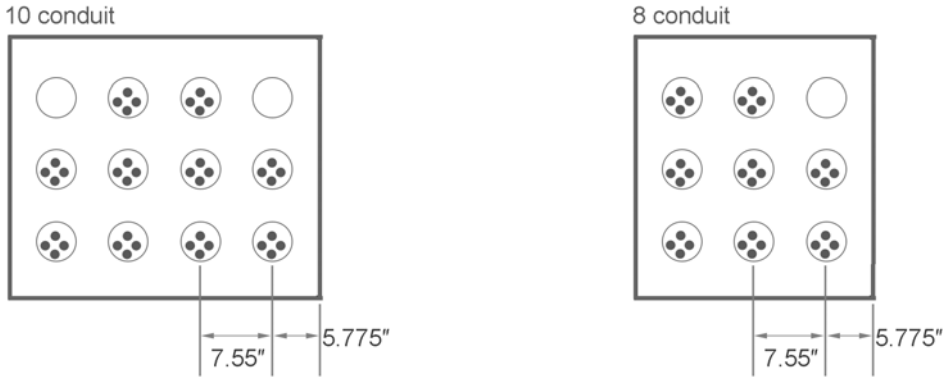

7. Tables

Table 7.1: 277/480V, 3Ø to Tap Box

Xfmr, kVA	# Holes Second. Spade	Option 1 #	Option 1 Cable Size	Option 1 Conduit Size, in	Option 2 #	Option 2 Cable Size	Option 2 Conduit Size, in
75	4	1	2	2	-	-	-
150	4	3	2	2	1	2/0	3
225	4	3	2	2	1	250	3
300	4	3	2/0	3	1	500	4
500	4	3	4/0	3	-	-	-
750	6	6	4/0	3	3	500	4
1000	6	6	350	4	3	750	4
1500	6	6	750	5	-	-	-
2000	10	8	750	5	10	500	4
2500	10	10	750	5	-	-	-

Table 7.2: 120/208V, 3Ø to Tap Box

Xfmr, kVA	# Holes Second. Spade	Option 1 #	Option 1 Cable Size	Option 1 Conduit Size, in	Option 2 #	Option 2 Cable Size	Option 2 Conduit Size, in
-	-	-	-	-	-	-	-
150	4	3	2/0	3	1	500	4
225	4	3	4/0	3	-	-	-
300	4	3	350	4	-	-	-
500	6	6	500	4	-	-	-
750	10	8	500	4	10	350	4
1000	10	10	750	5	-	-	-
-	-	-	-	-	-	-	-
-	-	-	-	-	-	-	-
-	-	-	-	-	-	-	-

8. References

0661.03; "Padmount Transformer, Installation and Grounding, 3Ø, 75-2500 kVA;" Construction Standard; SCL

Lu, Curtis; SCL Standards Engineer, subject matter expert and originator of 9242.42 (curtis.slu@seattle.gov)

National Electrical Code (NEC); NFPA; 2008; Table B.310.7

Requirements for Electrical Service Connection; Seattle City Light; 2007; Table 8-1

Siddiqi, Uzma; SCL Standards Engineer, subject matter expert (uzma.siddiqi@seattle.gov)

PULLING IRONS - FUNDAMENTALS AND DETAILED REQUIREMENTS, LOOPED RADIAL AND NETWORK SYSTEMS

1. Scope

This first half of this standard reviews pulling iron design fundamentals related to the installation of electric power cable in conduit systems. Subsequent sections of this standard provide detailed requirements for four application categories in the looped radial and network systems.

Placement and quantity of pulling irons required in vaults, design of conduit systems, and cable pulling work practices are outside the scope of this standard.

2. Application

This standard is intended to be used by Seattle City Light engineers and other personnel to better understand pulling iron design and application.

Pulling irons are structural attachment points embedded in the walls, ceilings, and/or floors of concrete utility vaults for the purpose of pulling in new cable and moving equipment.

Readers of this standard are encouraged to study the terms defined in section 4. To this day, even subject matter experts sometimes confuse the subtle difference in meanings between terms.

Pulling irons must be installed, applied, and used correctly or serious personal injury could result.

Engineers should avoid using any term that lacks a clear, verifiable definition.

3. Discussion

The resulting strength of a pulling iron is a function of the pulling iron itself, how it is embedded in (or otherwise attached to) the vault walls, floor, or ceiling, and the thickness and overall design of the vault.

Failure of a pulling iron installation during cable pulling must be avoided or serious injury could occur. There are two possible modes of failure. First, the metal of the pulling iron itself can deform and break; this seldom happens. Secondly, the

standards coordinator	standards manager	unit director
John Shipek	John Shipek	Pamela S. Johnson

3. Discussion, continued

pulling iron can be pulled out of the concrete structure. This is the more likely failure mode. Assessing damaged concrete to predict possible failure is difficult. When concrete fails, it does so very abruptly and without warning.

Combining the safety factor of the pulling iron itself with the (worst case) tension generated by the sheave, the installation of the pulling iron in the wall must be rated for a much greater force than might be first assumed.

At Seattle City Light, pulling iron applications may be divided into four categories, each having its own maximum working tension. The four categories are:

- In-building vaults
- Panel vaults
- Ring vaults
- Local distribution vaults

4. Definitions

Insert: Inserts are fittings designed into concrete fabrications for the purpose of setting vaults, risers, or lids, or attaching racks, ladders, or other equipment. Inserts shall not be used for pulling cables.

Pull, Direct: See Zero degree pull.

Pull, Side Angle: Any non-zero degree pull. Pulling iron designs are usually not evaluated in terms of side angle pulls due to the complexity of the math. Refer to Figure 1a.

Pull, Zero Degree: The case where the angle between the cable emanating from the sheave and heading to the puller is parallel with the cable emanating from the (same) sheave and heading to the cable reel. It is considered the worst case situation when evaluating working pulling iron tension. Refer to Figure 1b.

Pulley: A wheel, with a grooved rim for carrying a line, that turns in a frame or block and serves to change the direction of or to transmit force, as when one end of the line is pulled to raise a weight at the other end: one of the simple machines. Also called sheave in cable pulling.

Pulling Iron: The structural attachment point embedded in the walls, ceilings, and/or floors of concrete utility vaults for the purpose of pulling in new cable, pulling out old cable, or moving equipment.

Pulling Iron Forms: Shaped rubber pieces placed in the concrete before the pour to create space around the pulling iron to allow attachment access. Note: For in-building vault construction, customers may obtain these forms from the Seattle City Light vault inspectors.

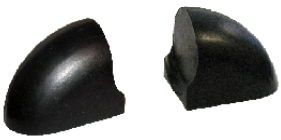

Pulling Iron Strength, Ultimate: The maximum tension that the pulling iron is guaranteed for by the manufacturer. Beyond this point the probability of failure increases. Denoted as ***U*** in Section 5 and 7.

Safety Factor: Safety factor is equal to the ultimate pulling iron strength divided by the maximum working tension. Denoted as ***S*** in Section 5.

Sheave: see pulley

Tension, Cable: Force exerted to draw or drag insulated electrical conductors.

Tension, Cable – Actual: tension experienced by the cable and can be measured in the field using a dynamometer on the pulling equipment during cable installation.

Tension, Cable – Maximum Allowable: Rated tension for a given cable. Cable damage could occur if this value is exceeded. Provided by the manufacturer.

Tension, Design: Tension to pull specific cable into a new or existing conduit system. Function of conduit system, cable, lubricant, ambient temperature, and other components that affect the friction between the cable and conduit. Calculated by the SCL engineer, see SCL Design Standard 9231.05.

Tension, Maximum Allowable: Peak safe tension for the cable and pulling equipment. Pulling in excess of this value can lead to cable damage or compromised personnel safety due to potential equipment failure. Evaluated by the SCL engineer,

4. Definitions, continued

see SCL Design Standard 9231.05. Denoted as ***P*** in Section 5 and 7.

Tension, Maximum Working: Recommended tension for the system of cable pulling equipment, including pulling irons, the pulling machine, vault construction, ropes, cable pulling grips and eyes, and other associated equipment. Pulling in excess of this value can lead to pulling iron or vault damage and can compromise personnel safety due to potential equipment failure. Provided in Table 1 of this Design Standard. Denoted as ***W*** in Section 5 and 7.

Tension, Pulling Equipment: Maximum Allowable: Peak tension for a given system of cable pulling equipment, including the pulling machine and the pulling grip and eye. Pulling in excess of this value can lead to compromised personnel safety due to potential equipment failure. Evaluated by the SCL engineer.

Tension, Pulling Iron: Force exerted on the pulling iron when it is used for cable installation or moving other electrical equipment.

5. Fundamentals

If the angle between the incoming line of a pulley and the outgoing line is anything other than zero (refer to Figure 1a), calculations become complex.

Figure 1a - Angle equals 60 degrees, example

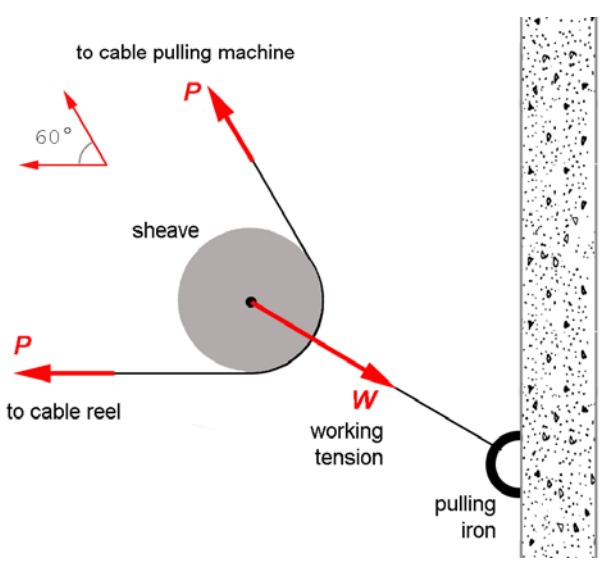

Angles other than zero move the sheave to a new, offset position of equilibrium and introduce a side force component on the pulling iron.

For this reason, most pulling iron designs are based on an angle of zero (refer to Figure 1b and 2).

Figure 1b - Angle equals zero degrees, example

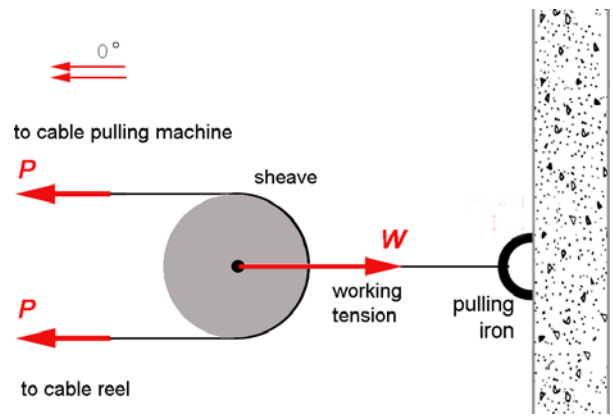

NESC rule 323.A5 requires a safety factor of two for pulling irons.

given:	***U***	=	ultimate pulling iron strength
	S	=	minimum pulling iron safety factor
		=	2
	W	=	working pulling iron tension
	P	=	cable pulling design tension
if:	***W***	=	2***P***
and:	***W***	=	***U/S***
		=	***U***/2
then:	***P***	=	***W***/2
		=	(***U***/2)/2
		=	***U***/4

In conclusion, if the angle between the incoming line of the pulley and the outgoing line is zero, the cable pulling tension, ***P***, shall be no more than a fourth of the ultimate strength of the pulling iron, ***U***.

5. Fundamentals, continued

Figure 2 - Forces acting on vault pulling iron (with example values)

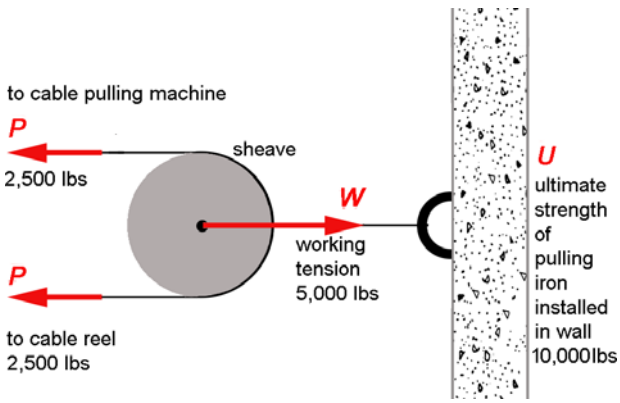

given: U = 10,000 lbs
S = 2
then: $W = U/2$ = 5,000 lbs
$P = W/2$ = 2,500 lbs

6. General Requirements and Discussion

When pulling cable into a vault, the installation crew should limit the cable tension to avoid damaging the cable. Excessive tension will damage the conductor or separate the layers of the cable. If such damage occurs, the cable life will be shortened.

Installing cable into a conduit system requires properly chosen cable and an adequately sized pulling assembly. Cable design tensions can be calculated for specific conduit system designs. Pulling assemblies, including pulling equipment, vault pulling irons, cable lubricants, and cable attachment equipment have an aggregate rating for the pulling assembly, commonly known as the maximum working tension. Cables have a maximum allowable pulling tension that is provided by manufacturers. Both the pulling assembly and the cable must be able to withstand the force required to pull into a specific conduit system.

Refer to SCL Construction Guideline E6-1.0/NGE-71 for a list of primary cable maximum pulling tension values.

Pulling irons are not rated for the higher tensions that may occur if used for cable removal.

7. Summary of Detailed Load Requirements

Table 7, Cable Pulling Ratings and Tensions

	U	*W*	*P*		
Vault Type	Pulling Iron Ultimate Strength, lb	Maximum Working Tension, lb	Maximum Allowable Tension, lb	Pulling Iron Size, in	Pulling Iron Steel
In-Building	10,000	5,000	2,500	7/8	ss
Panel 4	0,000	20,000	10,000	7/8	ss
Ring	20,000	10,000	5,000	7/8	galv
Local Distri-bution	10,000	5,000	2,500	1/2	galv

ss = stainless steel; galv = galvanized steel

Note: Above pulling tension values are based on assumption of only one sheave in use. The stated maximum pulling tension is the limit presented by the pulling iron; it does not take into account the limits imposed by the cable or other factors.

8. In-Building Vault Requirements and Discussion

8.1 General

Pulling irons in in-building vaults are typically designed and installed by the engineers and contractors who are constructing the building.

Pulling irons are required where it is not practical to transport cable reels into the in-building vault, that is, in situations where cable pulling equipment is located in the right-of-way vault.

Beginning in mid 2008, all newly installed Network in-building vault pulling irons are to be labeled with their maximum working tension (*W*) stenciled on the vault surface. It will soon be a Seattle City Light requirement that all pulling irons have their maximum working tension marked on a nearby surface. Unmarked pulling irons should be used with caution.

8. In-Building Vault Requirements and Discussion, continued

Pulling iron design drawings produced by contractors for use in in-building vaults shall be stamped by a licensed engineer and submitted to Seattle City Light for review.

Cable pulling tools are not used within in-building vaults to remove old or damaged cable. Cables are removed using right-of-way vaults. Hence, pulling irons are not rated for the higher tensions that may occur if used for cable removal.

8.2 Network

Primary cable is pulled into network in-building vaults using a cable pulling machine, commonly referred to as a Greenlee. Each tool has a rating for maximum and continuous pulling force; in Seattle City Light's Passport system these are listed as rated for 5,000 lbs.

In May 2008, Seattle City Light Network crews assessed past practice and confirmed that they do not exceed 2,500 lbs pulling in any type of cable into an in-building vault.

For more information, refer to NCI-62 Pulling Iron Installation, In-Building Vaults, Network System.

8.3 26.4 kV Looped Radial

The Seattle City Light design engineer may require installation of pulling irons within in-building vaults in the looped radial system. This is most often done in large vaults with CS type transformers.

9. Panel Vault Requirements and Discussion

Panel vaults contain Seattle City Light's heaviest feeder cables with the highest pulling tensions.

10. Ring Vault Requirements and Discussion

Ring vaults typically fall in size between 687LA and 818LA.

11. Local Distribution Vault Requirements and Discussion

A vault designed to house local distribution circuits.

Cable pull-ins to local distribution vaults normally employ a Kellem-grip pulling sock, which is limited to a range from 1,000 lbs to 5,000 lbs, depending on grip and cable size.

If an embedded pulling iron is discovered damaged, crews may substitute an appropriately-rated concrete insert with an attachment eye. Inserts of this type are sometimes referred to as Kwik-bolts.

Local distribution vaults are typically 577LA or smaller.

12. References

9271.05; "Cable Pulling Calculation Fundamentals;" *Design Standards*; SCL

Chao, Yaochiem; SCL Standards student intern; subject matter expert (yaochiem.chao @seattle.gov)

Detter, Chris; SCL Standards Engineer, subject matter expert and co-originator of 9246.10 (chris.detter@seattle.gov)

E6-1.0 / NGE-71; "Properties of 600 Volt and Weather-Proof Cables"; Construction Guidelines; SCL

National Electrical Safety Code (NESC); IEEE; 2007

NCI-62; "Pulling Iron Installation, In-Building Vaults, Network System"; *Construction Guidelines*; SCL

Ng, Sharon; SCL Senior Civil Engineer, subject matter expert (sharon.ng@seattle.gov)

Ogi, Irving; SCL Civil Engineer Supervisor, subject matter expert (irving.ogi@seattle.gov)

Siddiqi, Uzma; SCL Standards Engineer, subject matter expert and co-originator of 9246.10 (uzma.siddiqi@seattle.gov)

SCL Standards Group Draft Glossary; SCL; 2008

Youngs, Rob; SCL Network Crew Chief, subject matter expert (youngs.rob@seattle.gov)

DISCUSSION OF CONSTRUCTION STANDARD 0751.00: CUSTOMER REQUIREMENTS, IN-BUILDING TRANSFORMER VAULTS, NETWORK AND LOOPED RADIAL SYSTEMS

1. Table of Contents

Section		Page
1.	Table of Contents	1
2.	Scope	1
3.	Application	2
4.	Conflicts	2
5.	Accessibility	2
6.	Location	5
7.	Construction	5
8.	Doorways and Openings	7
9.	Ventilation	9
10.	Drainage	14
11.	Pipes and Ducts	15
12.	Storage in Vaults	15
13.	Sprinkler System	16
14.	References	16

2. Scope

This Design Standard covers select in-building vault requirements which are listed in the table of contents, in sections 4 through 13.

This Design Standard provides discussion of these requirements and basis for Seattle City Light (SCL) Network and Looped Radial (formerly URD) in-building transformer vaults. These vault rooms contain SCL owned or maintained equipment.

An in-building transformer vault is a special room inside a building in which oil-filled transformers and related electric power distribution equipment are housed.

This Standard is supplemental to Construction Standard 0751.00 that is prepared for customer use and this Standard contains some of the same content.

Concurrent Looped Radial vault requirements are listed in Construction Standard 0751.60 and discussed in Design Standard 9251.60; topics include vault grounding, lighting, ducts, cables,

2. Scope, continued

bus duct, etc. These Standards also list required customer submittals and SCL provided project specific requirements.

Concurrent Network vault requirements are listed in the project specific customer requirements package.

Electrical vaults within buildings that contain equipment that is owned and maintained by others are not covered by this Design Standard.

3. Application

An in-building vault is required if the customer's electrical load exceed the limits listed in *Requirements for Electrical Service Connection*, Table 5-1, and the customer cannot provide exterior space for the installation of SCL transformers and associated equipment on the project premises.

This Design Standard lists the SCL requirements for in-building vaults. Specifically, SCL has reviewed and assessed requirements from:

- 2006 Seattle Building Code, Section 422
- 2008 National Electric Code, Section 450
- SCL installation and operation requirements

This Design Standard applies throughout the SCL service area.

Vault requirements unique to either the Network or Looped Radial (URD) are clearly indicated. All other requirements are applicable for both Network and Looped Radial systems.

This Design Standard is intended for use by SCL engineering, customer service, inspecting, reviewing, and operations personnel.

This document is for internal use only.

4. Conflicts

Where conflict exists between SCL requirements, the following order of precedence shall apply:

a. Project Specific Customer Requirements Package, including the Service Construction Letter and Drawings

b. SCL Construction Standard 0751.00

c. Seattle Building Code, 2006, Section 422 (within the City of Seattle)

d. SCL Construction Standard 0751.60

e. Other SCL Construction Guidelines or Construction Standards

f. SCL Requirements for Electric Service Connection, 2007

g. Other industry standards

5. Accessibility

		basis/reference	discussion/comments
		SBC 422.4, 2006 NEC 450.13 2008	
5.1.	Seattle City Light prefers that SCL trucks be able to access the door or hatch of the in-building vault.	SCL Preference	• See SCL Design Standard 9053.14
5.2.	In-building vaults shall be located no more than one floor below the building's exterior finished grade.	SCL Requirement	
5.3.	Network: One or more door(s) or ceiling hatch shall be provided for every in-building vault. SBC Less Restrictive: At least one opening, which may be a door or a hatch, shall be provided to every vault.	SCL Requirement SBC 422.4.1, 2006	• SCL personnel must be able to access the SCL equipment • Door requirements are in section 4 of this Design Standard • Network allows ceiling hatches

	basis/reference	discussion/comments
5. Accessibility, continued		
5.4. Looped Radial (formerly referred to as URD): One or more door(s) shall be provided for every in-building vault.	SCL Requirement	• SCL personnel must be able to access the SCL equipment • Door requirements are in section 4 of this Design Standard. • Entry wells are preferred over ceiling hatches
SBC Less Restrictive: At least one opening, which may be a door or a hatch, shall be provided to every vault.	SBC 422.4.1, 2006	• Ceiling hatches are allowed only if other options are a hardship for the customer and if the space is a dry location or if there is no equipment located under the hatch
5.5. The opening shall be adequate in size to permit the installation and removal of the equipment located in the vault.	SBC 422.4.1, 2006	• SCL equipment must be able to enter and exit the vault
5.6. The door access shall be kept unobstructed at all times.	SBC 422.4.1, 2006	• SCL personnel must be able to access the SCL equipment
5.7. An unobstructed level area shall be provided at the entrance to the in-building vault.	SBC 422.4.1, 2006	• SCL equipment must be able to enter and exit the vault
5.8. The level area shall be large enough for moving SCL equipment into and out of the in-building vault.	SBC 422.4.1, 2006	• SCL equipment must be able to enter and exit the vault
5.9. All in-building vaults shall be readily accessible to SCL personnel at all times.	SBC 422.4.2, 2006 NEC 450.13, 2008	• SCL personnel must be able to access the SCL equipment
Additional Requirements. SBC: If it is necessary to pass through locked doors to reach the in-building vault, keys for those locked doors shall be kept in a readily accessible key box near the first locked door.	SBC 422.4.2, 2006	
5.10. Looped Radial (URD): If it is necessary to pass through locked doors to reach the in-building vault, keys for those locked doors shall be kept in a readily accessible key box near the first locked door.	SBC 422.4.2, 2006	• SCL transformer vaults are often accessed through a building's switchroom. The keybox allows SCL personnel to access the vault.
Additional Requirements. SBC: If it is necessary to pass through locked doors to reach the in-building vault, keys for those locked doors shall be kept in a readily accessible key box near the first locked door.	SBC 422.4.2, 2006	

	basis/reference	discussion/comments
5. Accessibility, continued		
5.11. Network: If it is necessary to pass through locked doors to reach the in-building vault, keys for those locked doors shall be kept in a readily accessible key box near the first locked door. A spare set shall also be provided.	SCL Requirement	• SCL transformer vaults are often accessed through a building's switchroom. The keybox allows SCL personnel to access the vault.
Additional Requirements. SBC: If it is necessary to pass through locked doors to reach the in-building vault, keys for those locked doors shall be kept in a readily accessible key box near the first locked door.	SBC 422.4.2, 2006	
5.12. Non-SCL personnel shall not enter the in-building vault without SCL personnel after the vault has been accepted by SCL.	SBC 422.4.2, 2006	• Primarily a safety concern; non-SCL personnel are allowed to enter with SCL personnel
5.13. There shall be a clear equipment access path between the vault and the building exterior or right-of-way.	SBC 422.4.2, 2006	• Moving large equipment such as transformers is challenging; a clear path makes the task easier
5.13.1. Sufficient horizontal and vertical clearance for electrical equipment and machinery to move the equipment.	SBC 422.4.2, 2006	• Not only must there be enough space for the equipment, but also for the machinery such as the Cat Tracks (see Material Standard 0036.4) or occasionally forklifts.
5.13.2. The path floor shall be smooth, without seams or ridges or pads.	SBC 422.4.2, 2006 SBC 422.6.2.2, 2006	• Cat Tracks and similar methods need a smooth surface
5.13.3. SCL shall move in the transformers to the in building vault room if the path floor slope is 3% or less. If the path floor exceeds 3%, the customer is responsible to move in the transformers.	SCL Requirement	• Transportation Agreement is required for all in building vaults if the path floor exceeds 3%. (This protects SCL from pathway changes.)
SBC text is restated for clarity: The path floor shall not have excessive slope.	SBC 422.4.2, 2006	• Steep grades make equipment moving challenging
5.13.4. The path floor shall be designed to support the weight of the electrical equipment and machinery to move the equipment.	SBC 422.4.2, 2006	• Larger transformers full of oil are extremely heavy, up to 30,000 lbs

	basis/reference	discussion/comments
6. Location		
	SBC 422.5, 2006 NEC 450.41, 2008	
6.1. In-building vaults shall be located such that they can be ventilated to the outside without using ducts, if practical.	SBC 422.5, 2006 NEC 450.13, 2008	• SCL prefers that there be no ducting for the exhaust
6.2. In-building vaults shall be dry and not subject to running, standing, flooding, or infiltration of water.	SBC 422.5, 2006	• Most electrical equipment is not intended to be in a wet location
6.3. Exact location of in-building vault shall be determined for each specific project.	SCL Requirement Design Standard 9053.14	• Due to project specific issues, in-building vaults must be located individually (source incoming path, easy access for equipment installation, etc)
7. Construction (Walls, Roofs, and Floors)		
	SBC 422.6, 2006 NEC 450.42, 2005	
7.1. Floors, walls, and ceilings of in-building vaults shall have a minimum three hour fire resistance rating.	SBC 422.6.2.1, 2006 NEC 450.42, 2008	• Vaults are intended primarily as passive fire protection, per the NEC
7.2. All penetrations shall be sealed to be three-hour fire rated.	NEC 300.21, 2008	• Crucial to limiting spread of fire and blocking the products of combustion
7.3. Network: The bottom 8 feet of wall, minimum, shall be solid concrete at least 6 inches thick. Above the solid concrete wall, it may be solid concrete or concrete filled masonry units at least 6 inches thick.	SCL Requirement	• Bus tie switches are often installed directly on the wall (Required for hanging heavy equipment, such as network protectors etc)
7.4. Network: Floors and ceilings of in-building vaults shall be constructed of solid concrete at least 6 inches thick. SBC Less Restrictive: Floors, walls, and ceilings of in-building vaults shall be constructed of solid concrete or concrete-filled masonry units at least 6 inches thick. (Stud and wallboard construction is not acceptable.)	SCL Requirement SBC 422.6.2.1, 2006 NEC 450.42, 2008	• Steel channel for cable supports are hung from the ceiling • Floors must be strong enough for SCL electrical equipment • Vaults are intended primarily as passive fire protection, per the NEC
7.5. Looped Radial (URD): Floors, walls, and ceilings of in-building vaults shall be constructed of solid concrete or concrete-filled masonry units at least 6 inches thick.	SCL Requirement	• Vaults are intended primarily as passive fire protection, per the NEC

	basis/reference	discussion/comments
7. Construction, continued		
7.5. Looped Radial, continued		
SBC Less Restrictive: Floors, walls, and ceilings of in-building vaults shall be constructed of solid concrete or concrete-filled masonry units at least 6 inches thick. (Stud and wallboard construction is not acceptable.)	SBC 422.6.2.1, 2006 NEC 450.42, 2008	
7.6. Seismic anchors shall be embedded in the floor.	SBC 422.6.2.3, 2006	• SCL is Zone 3 for earthquakes
7.7. Network: Steel support channels shall be embedded in the ceiling for ceiling supported cable hangers. Channel layout shall be determined for each specific project by SCL.	SCL Requirement	• Channel installation per Construction Guideline NCI-190 • Used for hanging unistrut for cable routing (This is required within the Network area, Looped Radial does not generally require)
Clarifying SBC: Steel support channels shall be embedded in the ceiling, if requested by SCL.	SBC 422.6.2.3, 2006	
7.8. Looped Radial (URD): Steel support channels shall be embedded in the ceiling, if requested by SCL.	SBC 422.6.2.3, 2006	• Used for hanging unistrut for cable routing (This is required within the Network area, Looped Radial does not generally require)
Clarifying SBC: Steel support channels shall be embedded in the ceiling, if requested by SCL.	SBC 422.6.2.3, 2006	
7.9. Pre-tensioned or post-tensioned concrete shall have the cable locations permanently marked on the surface of the concrete over the encased tendons.	SBC 422.6.2.4, 2006	• SCL personnel do not want to damage the tensioning cables during installation
7.10. In-building vault dimensions shall depend on the equipment and working clearances required.	SBC 422.6.2.5, 2006	• Electrical equipment requires working clearance for performing the work and for egress in case of an emergency • A future Design Standard will provide working clearances for in-building vault equipment
7.11. Network: The maximum ceiling height is 18 feet	SCL Requirement	• Special seismic design for IWCB and cable hanging required if ceiling height over 18 feet
7.12. Working space for all equipment 600V and under shall be 3 feet, minimum.	SCL Requirement NEC 110.26 (A), 2008	• Intent is to provide enough space for personnel to perform live front operations without jeopardizing worker safety

	basis/reference	discussion/comments
7. Construction, continued		
7.13. Network: Pulling iron(s) shall be installed opposite the primary cable duct bank entrance(s) on the wall or the ceiling. Exact pulling iron location shall be determined for each specific project by SCL.	SCL Requirement	• Pulling irons are required to install SCL equipment such as cables • Per Construction Guideline NCI-62 • SCL provides pulling irons
7.14. Looped Radial (URD): Pulling iron(s) shall be installed opposite the primary cable duct bank entrance(s) on the wall or the ceiling, if required by SCL.	SCL Requirement	• Pulling irons are required to install SCL equipment such as cables • SCL provides pulling irons
7.15. The vault floor shall be smooth, without seams or ridges or pads.	SCL Requirement	• Smooth floor eases equipment movement
8. Doorways and Openings	SBC 422.7, 2006 NEC 450.43, 2008	
8.1. Protection and Doorways (Type of Door)		
8.1.1. Looped Radial (URD): SCL requires an equipment access door. The number of personnel access doors shall be determined for each specific project by SCL.	SCL Requirement	
8.1.2. Network: SCL requires two doors for personal egress; one of which may be an equipment access door.	SCL Requirement	• In case of equipment failure, two paths for personnel exit will improve the worker's ability to quickly exit
8.1.3. All in-building vault doors shall have three-hour fire resistance rating. SBC Less Restrictive: All doorways opening into in-building vaults from the building interior shall have three-hour fire resistance rating.	SBC 422.7.2, 2006 NEC 450.43A, 2008 (allowed) SBC 422.7.1, 2006	• Transformer vaults provide passive fire protection per the NEC and this is one of the methods
8.1.4. All in-building vault doors shall be Class A.	NFPA 80, Annex D	• Class A doors are for openings in fire walls that divide into fire areas
8.1.5. All in-building vault doors shall not have any vents or other types of openings.	SCL Requirement	• Exhaust venting is not allowed in the door
8.1.6. All in-building vault doors shall swing out of the vault 180 degrees.	SBC 422.7.2, 2006 NEC 450.43C, 2008	• 180 degree swing maximizes ingress and egress

	basis/reference	discussion/comments
8. Doorways and Openings, continued		
8.1. Protection and Doorways, continued		
8.1.7. Doors that may be prevented from swinging 180 degrees by vehicles or mobile equipment shall be protected by bollards. Bollards shall preserve the door swing area and not obstruct the doorway.	SBC 422.7.2, 2006	• For example, if the in-building vault opens into a parking space, there should be bollards so that personnel can exit and enter.
8.1.8. Personnel access doorways shall be at least 3 feet wide by 6 feet 8 inches high.	SBC 422.7.2, 2006	• Adequate personnel ingress and egress is required • SCL will request 7-foot doors in next SBC
8.1.9. Door hinge pins shall not be removable.	SCL Requirement	• SCL does not want doors to be removed.
8.2. Locks	SBC 422.7.2.1, 2006 NEC 450.43C, 2005	
8.2.1. All in-building vault doors shall be equipped with locks and shall be kept locked (storeroom function).	SBC 422.7.2.1, 2006 NEC 450.43C, 2008	• Due to life/safety concerns, only qualified SCL personnel are allowed within in-building vaults
8.2.2. All in-building vault doors shall be equipped with a cylinder capable of accepting the Best 7-pin Interchangeable Core provided by SCL.	SCL Requirement	• Due to life/safety concerns, only qualified SCL personnel are allowed within in-building vaults • New Installations: 7 pin core
SBC Less Specific: All in-building vault doors shall be equipped with a cylinder capable of accepting the core provided by SCL.	SBC 422.7.2.1, 2006	
8.2.3. Doors shall be equipped with panic bars, pressure plates, or other devices that are normally latched but open under simple pressure.	SCL Requirement	• Easy egress is required
SBC less Restrictive: Personnel doors shall be equipped with panic bars, pressure plates, or other devices that are normally latched but open under simple pressure.	SBC 422.7.2.1, 2006 NEC 450.43C, 2008	
8.3. Sills	SBC 422.7.2.2, 2006 NEC 450.43B, 2008	
8.3.1. All in-building vault doorways shall have a removable, oil containment sill of 4 inches (min). Exact height of curb shall be determined for each specific project by SCL.	Same as 4.3.1.1	• SCL sizes the sill to keep the oil within the vault. SCL uses the oil of one transformer to calculate oil volume

	basis/reference	discussion/comments
8. Doorways and Openings, continued		
8.3. Sills, continued		
SBC restated for clarity. A removable oil containment sill shall be as high as necessary to contain the oil of one transformer (per SCL), but not less than 4 inches high.	SBC 422.7.2.2, 2006 NEC 450.43B, 2008	
8.3.2. The sill shall be made of masonry or concrete and sealed.	SCL Requirement	• Masonry or concrete required to maintain fire-rating of vault
8.3.3. Network: The sill shall be located under each door.	SCL Requirement	• Network preferred location
8.3.4. Looped Radial (URD): The sill shall be located under or behind each door.	SCL Requirement	• Looped Radial (URD) allows either
8.3.5. The sill shall be installed after the installation of the electrical equipment.	SBC 422.7.2.2, 2006	• This requirement simplifies the installation of electrical equipment
8.4. Equipment Installation, Access, and Removal		• Section added for clarity
8.4.1. Equipment access doorways shall be sized to accommodate the installation and removal of electrical equipment (including the installation machinery).	SBC 422.7.2, 2006	• Installation and removal paths for the equipment are normally through doorways
8.4.1.1. If vault contains single phase transformers only, the doorway shall be at least 3 feet 6 inches wide and 6 feet 8 inches high.	SBC 422.7.2, 2006	• Provides adequate space for typical single phase transformers
8.4.1.2. All other doorways shall be sized by SCL, as needed.	SBC 422.7.2, 2006	• Larger doorways are required for commercial subway and network transformers
9. Ventilation	BC 422.8, 2006 NEC 450.45, 2008	
9.1. Ventilation systems shall be provided to dispose of heat from transformer total losses without creating a temperature rise that exceeds the transformer rating.	SBC 422.8.1, 2006	• Ambient heat is a known factor in reducing transformer life
9.2. The owner is responsible for maintaining the vault ventilation system to ensure proper and continued operation.	SCL Requirement	• To maintain optimal performance of the transformers, a properly operating ventilation system is required

	basis/reference	discussion/comments
9. Ventilation, continued		
9.3. Method of ventilation	SBC 422.8.2, 2006	
9.3.1. Utility in-building vaults shall be mechanically ventilated. SBC Less Restrictive: Transformers vaults containing up to three transformers of no more than 75 kVA each are permitted to be ventilation by natural circulation.	SCL Requirement SBC 422.8.2.1	• Mechanical ventilation is very effective at removing heat. • SBC allows for smaller transformers to be passively ventilation, but SCL no longer installs such small services in in-building vaults
9.3.2. Positive or negative pressure ventilation systems shall supply air for in-building vaults.	SBC 422.8.2.2, 2006 Design Standard 9223.20	• SFD rep was okay with either positive or negative. (12/5/07 Richardson) • See Design Standard 9223.20 for additional information about positive and negative vault ventilation pressure.
9.3.3. Ventilation system shall supply a minimum of 1.6 cubic feet per minute (cfm) of air per kVA of transformer capacity.	SBC 422.8.2.2, 2006	• Air flow is required to cool the transformer. • For both Looped Radial (URD) and Network, the cfm is calculated as 1.6 times the kVA rating of the next largest transformer (as compared to the transformer being installed). The installed transformer is sized for the NEC connected load times a demand factor based on type of construction
9.4. Location	SBC 422.8.3.1, 2006 NEC 450.45A, 2008	
9.4.1. Exhaust ventilation openings and duct terminations shall be located not less than 10 feet from fire escapes, required means of egress, combustible materials, unprotected openings and property lines.	SBC 422.8.3.1, 2006	• Allows for adequate egress from the building
9.4.2. Exhaust outlets shall be located on the exterior of the building.	SBC 422.8.3.1, 2006	• For emergency condition: not putting smoke back in the building. For energy efficiency: not putting heat back into conditioned air

	basis/reference	discussion/comments
9. Ventilation, continued		
9.5. Arrangement (of ventilation equipment)		
9.5.1. Fans and thermostats		
9.5.1.1. The in building vault ventilation fans shall be installed outside of the vault.	SBC 422.8.2.2, 2006	• Maintained by the building owner (if located inside would require a SCL safety for maintenance)
9.5.1.2. The in building vault ventilation fans shall be controlled by a thermostats located inside the vault.	SBC 422.8.2.2, 2006	• Because ambient temperature affects SCL equipment life, SCL wants to control the temperature setting
9.5.1.3. Remote temperature controller shall be installed.	SBC 422.8.2.3, 2006	• No comment
9.5.1.4. A dedicated thermostat will activate the fans at 70 degrees F. SBC Less Restrictive: The thermostat will activate the fans at 70 degrees F.	SCL Requirement SBC 422.8.2.3, 2006	• Setting to start fan so that active ventilation can be used to remove transformer heat
9.5.1.5. The second dedicated thermostat will turn off the fans at 140 degrees F.	SBC 422.8.2.3, 2006	• Setting to stop fan because this excessive heat may indicate a fire
9.5.1.6. Thermostats shall be analog (dial) type (SCL has accepted the Honeywell T631A-C type Farm-O-Stat, Model No T631A1022). Other analog thermostats shall be submitted to SCL for review.	SCL Requirement	• Ease of initial set-up, operation, and testing
9.5.1.7. Looped Radial (URD): If fans becomes inoperable or do not turn on at 70 degrees or if the vault temperature exceeds 140 degrees, activate a visible or audible alarm with sign outside vault. Sign shall state "If alarming, call Seattle City Light at 206-625-4448".	SBC 422.8.2.3, 2006	• Alarm when fan malfunctions or vault temperature overheats because the excessive heat may be indicating a fire
9.5.1.8. Network: No visible or audible customer installed alarm required. SCL installs monitoring equipment.	SCL Requirement	• Fire Protection System per Construction Guideline NCB-140 • Hazeltine/Digital Grid System per NTP-123
9.5.1.9. The building owner is responsible for providing power and maintaining the vault ventilation system, including the fans.	SCL Requirement	• Simplifies the issue of providing low voltage power to the fan and building owners perform this type of maintenance regularly for other similar equipment

	basis/reference	discussion/comments
9. Ventilation, continued		
9.5. Arrangement (of ventilation equipment), continued		
9.5.1. Fans and thermostats, continued		
9.5.1.10 Looped Radial (URD): The building owner may monitor vault fan alarm signal, but shall not control vault fan or alarm.	SCL Requirement	• Customer may choose to monitor vault fan and alarm
9.5.2. Vents		
9.5.2.1. Intake air shall be drawn from the exterior, from a garage, or from an SCL transformer entrance well. It shall not be drawn from conditioned air in the building.	SCL Requirement	• Not allowing conditioned air reduces the possible spread of smoke and fire through the intake duct to the building
9.5.2.2. Intake vents shall be located at least 18 inches above the interior and exterior floors.	SCL Requirement	• Want to have coolest air for ventilation and generally cold air sinks and want it to come into the vault low for maximum cooling efficiency
SBC Less Restrictive: Intake vents shall be at least 18 inches above the garage floor if the intake is from a garage.	SBC 422.8.2.2, 2006	• Do not want to have the heaviest vehicle exhaust materials
9.5.2.3. The intake vents shall be located in the lower one half of the exterior walls of the vault.	SBC 422.8.2.2, 2006	• Want to have coolest air for ventilation and generally cold air sinks
9.5.2.4. The exhaust vents shall be in the upper half of the wall or in the roof or ceiling of the vault.	SBC 422.8.2.2, 2006	• Want to have the warmest air and leave the vault and generally warm air rises
9.5.2.5. Exhaust shall vent directly to the outside of the building or shall be ducted using three-hour rated material.	SCL Requirement	• In-building vaults shall exhaust to the building exterior
9.5.2.6. Exhaust cannot vent to a covered parking area or garage.	SCL Requirement	• In-building vaults shall exhaust to the building exterior
9.5.3. The ventilation system shall cause air to flow across the cooling fins of the transformers.	SCL Requirement	• Longitudinal air flow allows for the most efficient air flow across the cooling fins of larger transformers

	basis/reference	discussion/comments
9. Ventilation, continued		
9.5. Arrangement (of ventilation equipment), continued		
9.5.3 Air to flow, continued SBC Less Restrictive: The ventilation system shall cause air to flow longitudinally across the transformers.	SBC 422.8.2.2, 2006	
9.5.4. Ventilation system shall direct air flow diagonally across the vault	SCL Requirement	• Air management is required throughout the vault.
9.5.5. The vault ventilation system shall be controlled independently of the building ventilation system.	SBC 422.8.2.2, 2006	• The vault ventilation system is required for a unique purpose and hence is independent
9.5.6. No ducting shall be installed within the vault.	SCL Requirement	• SCL does not want ducting to impede personnel or equipment movement
9.5.7. Vents shall not allow water to enter the vault.	SCL Requirement SBC 422.12, 2006	• In-building vaults are intended to be dry environments
9.5.8. Looped Radial (URD): Vents shall be 3 feet away from non-combustible surfaces and 10 feet away from combustible surfaces.	SCL Requirement	• Avoids obstruction of ventilation system • Fan maintenance, in some cases
9.6. Covering		
9.6.1. Ventilation openings shall be covered with durable metal gratings, screens, or louvers.	SBC 422.8.3.2, 2006	• To keep trash, rodents, and other foreign material out
9.6.2. If operable louvers are provided, they shall be controlled by the fan thermostat (i.e. louvers open when fan is energized).	SBC 422.8.3.2, 2006	• Want to make sure the louvers and fan work as a system
9.7. Dampers		
9.7.1. Intake vents in the vault walls from the interior of the building shall have automatic closing fire dampers rated for 3 hr fire resistance.	SBC 422.8.3.3, 2006	• Transformer vaults provide passive fire protection per the NEC and this is one of the methods
9.7.2. Damper actuating device shall function at 140 degrees F.	SBC 422.8.3.3, 2006	• Damper shall actuate because the excessive heat may be indicating a fire. Normally the device is a fusible link.
9.8. Ducts		
9.8.1. If used, exhaust ducts shall have a three-hour fire resistance rating.	SBC 422.8.3.4, 2006	• Transformer vaults provide passive fire protection per the NEC and this is one of the methods

	basis/reference	discussion/comments
9. Ventilation, continued		
9.8. Ducts, continued		
9.8.2. Exhaust ducts shall extend from the vault to the outside of the building.	SBC 422.8.3.4, 2006	• In-building vaults shall exhaust to the building exterior
9.8.3. Exhaust ducts shall be used exclusively for vault ventilation.	SBC 422.8.3.4, 2006	• The vault ventilation system is required for a unique purpose and hence is independent
9.8.4. No fire dampers shall be installed in exhaust ducts.	SBC 422.8.3.4, 2006	
10. Drainage	SBC 422.9, 2006 NEC 450.46, 2008	
10.1. Drains are prohibited in all in-building vaults.	SBC 422.9, 2006	• SCL wants to contain all liquids within the vault
10.2. Sumps	SBC 422.9, 2006	
10.2.1. All in-building vaults shall have a dry sump.	SBC 422.9, 2006	• Sump is required to receive any liquids on the vault floor
10.2.2. Network: The sump shall have a minimum capacity of 8 cubic feet.	SCL Requirement	• Based on historical knowledge • 1 cubic foot = 7.48 US gallons • Network wants 8 cubic feet
10.2.3. Looped Radial (URD): The sump shall have a minimum capacity of 2 cubic feet. SBC Less Restrictive: Sumps shall have at least an 8 gallon capacity, or greater if specified by SCL.	SCL Requirement SBC 422.9, 2006	• Based on historical knowledge • 1 cubic foot = 7.48 US gallons • Looped Radial (URD) wants 2 cubic feet
10.2.4. Network: Sumps shall have an opening with 6 inches minimum in both length and width and have a depth of at least 12 inches.	SCL Requirement	• SCL prefers a square sump opening • Opening and depth required to pump out the sump
10.2.5. Looped Radial (URD): S umps shall have an opening of at least 18 inches by 18 inches and have a depth of at least 12 inches. SBC Less Restrictive: Sumps shall have an opening of at least 6 inch diameter and a depth of at least 12 inches.	SCL Requirement SBC 422.9, 2006	• SCL prefers a square sump opening • Capacity a little over 2 cubic feet • Opening and depth required to pump out the sump
10.2.6. Sumps shall be equipped with a removable galvanized steel grate that is flush with the floor.	SCL Requirement	• Reduces likelihood of tripping and falling. Galvanizing extends life of grate

	basis/reference	discussion/comments
10. Drainage, continued		
10.2. Sumps, continued		
10.2.6 Steel grate, continued		
SBC Less Restrictive: Sumps shall be equipped with a removable steel grate that is flush with the floor.	SBC 422.9, 2006	
10.2.7. Sumps shall have a grouted bottom.	SBC 422.9, 2006	• Do not want to have the sump leak
10.2.8. At least one sump shall be located near the personnel door but not in the equipment access path or in front of the door.	SBC 422.9, 2006	• Easier access via personnel door for the SCL crews to pump the sump
SBC Less Restrictive: Sumps shall be located near a door but not in the equipment access path or in front of the door.	SBC 422.9, 2006	
10.2.9. The floor shall slope at least one inch in ten feet towards the sump.	SBC 422.9, 2006 NEC 450.46, 2008	• The floor should be graded so that liquids flow towards the sump
11. Pipes and Ducts (Water Pipes and Accessories)	SBC 422.10, 2006 NEC 450.47, 2008	
11.1. No pipes or foreign ducts shall pass or enter the in-building vault.	SBC 422.10, 2006 NEC 450.47, 2008	• An in-building vault is a special use room and foreign ducts could adversely affect the functionality
11.2. Electrical conduits terminating in the vault shall be sealed with a listed three-hour fire rated material.	SBC 422.10, 2006 NEC 300.21, 2008	• Transformer vaults provide passive fire protection per the NEC and this is one of the methods • NEC 300-21 requires firestops if opening in fire-rated structures • Customers use a fire stop chalk between the outside of the conduit and fire rated wall
12. Storage in Vaults	SBC 422.11, 2006 NEC 450.48, 2008	
No material shall be stored in any in-building vault.	SBC 422.11, 2006 NEC 450.48, 2008	• An in-building vault is a special use room and not a closet

	basis/reference	discussion/comments
13. Sprinkler System	SBC 422.12, 2006 NEC 450.47, 2008	
13.1. Sprinkler systems shall not be installed within an in-building vault.	SBC 422.12, 2006 NEC 450.47, 2008	• NEC permits sprinkler protection; however, SCL does not want water spray
13.2. In-building vaults shall be maintained in a dry condition.	SBC 422.12, 2006	• SCL designs and builds the electrical system as a "dry" installation; if it were a "wet" installation a different design philosophy would be used

14. References

0751.00; "Customer Requirements, In-Building Transformer Vaults, Network and Looped Radial Systems;" Construction Standard; SCL

0751.60; "Concurrent Customer Requirements for In-Building Transformer Vaults, Looped Radial System;" Construction Standard; SCL

0036.4; "Commercial Underground Three-Phase Transformer;" Material Standard; SCL

9053.14; "In-Building Vaults Location, Looped Radial System;" Design Standard; SCL

9251.60; "Discussion of Construction Standard 0751.60: Concurrent Requirements for In-Building Transformer Vaults, Looped Radial System;" Design Standard; SCL

NCB-140; "Fire Detection Installation Details and Wiring Diagram for Dry Vault"; Construction Guideline; SCL

NCI-62; "Pulling Iron Installation, In-Building Vaults, Network System"; Construction Guideline; SCL

NCI-190; "Ceiling Channel for Network Vaults"; Construction Guideline; SCL

NFPA 70 - NEC; *National Electrical Code*; 2008

NFPA 80; *Standard for Fire Doors and Other Opening Protectives*; NFPA; 2007

NTP-123; "*Digitalgrid NCS Transmitter Installation, Network Protectors*", Construction Guideline; SCL

Requirements for Electric Service Connection; Seattle City Light, 2007

SCL 2007-2008 In-Building Vault Subcommittee: Shayan Arya, Ed Chu, Toni Gamble, Laurie Hammack, Bob Hansen, Gerard Legall, Eivind Perander, Uzma Siddiqi, Quang Ta, and Roger Tapp.

Seattle Building Code; Section 422; 2006

Siddiqi, Uzma; SCL Standards Engineer, subject matter expert, and originator of 9251.00 (uzma.siddiqi@seattle.gov)

DISCUSSION OF CONCURRENT REQUIREMENTS, IN-BUILDING TRANSFORMER VAULTS, LOOPED RADIAL SYSTEM

1. Table of Contents

Section Page

1. Table of Contents 1
2. Scope 1
3. Application 1
4. Conflicts 1
5. SCL Project Specific Requirements 2
6. Other Agency Requirements 3
7. Required Customer Submittals 4
8. SCL Inspections 4
9. Easements 5
10. General Requirements 6
    Figure 1, Preferred layouts for in-building transformer vault room 6
11. Vault Grounding 6
12. Vault Lighting 8
13. Vault High Voltage (Primary) Entrance 8
14. Customer's Service Connection (Service Entrance) 10
15. Vault Document Enclosure 12
16. Requirements of Other Utilities 13
17. References 13

2. Scope

This design standard covers requirements for in-building transformer vaults located in the looped radial system (URD). The topics addressed are listed in the Table of Contents above.

This design standard is supplemental to Construction Standard 0751.60; it adds two explanatory columns: Basis/Reference and Discussion/Comments.)

This standard shall be used in conjunction with Design Standard 9251.00 and the related Construction Standard 0751.00 both of which state and discuss other requirements, including: Accessibility, Location, Construction (Walls, Roof, and Floors), Doorways and Openings, Ventilation, Drainage, Pipes and Ducts, Storage in Vaults, and Sprinkler Systems.

This standard should *not* be used for In-Building vaults:

- Located in any of the SCL Network areas
- Containing switchgear

3. Application

This design standard lists the SCL requirements for in-building vaults. An in-building vault is required if the customer's electrical load exceed the limits listed in *Requirements for Electrical Service Connection*, Table 5-1, and the customer cannot provide exterior space for the installation of SCL transformers and associated equipment of the project premises.

This design standard is intended to be used by SCL engineering, customer service, inspecting, reviewing, and operations personnel.

This document is for internal use only.

4. Conflicts

Where conflict exists, the following order of precedence shall apply:

- Project specific Customer Requirements Package, including the Service Construction Letter and Drawing
- SCL Construction Standard 0751.00
- Seattle Building Code, 2006, Section 422 (within the City of Seattle)
- SCL Construction Standard 0751.60
- Other SCL Construction Standards and Guidelines
- SCL Requirements for Electric Service Connection Manual, 2007
- Other industry standards

standards coordinator	standards manager	unit director
John Shipek	John Shipek	Pamela S. Johnson

		basis/ reference	discussion/comments
5.	**SCL Project Specific Requirements**		
	When necessary, Seattle City Light Engineering will provide the following project specific requirements for in-building vaults:		
5.1.	Minimum vault dimensions, including the height of ceilings	9255.14	• Issues: type of transformer (SY/CS), location of vault, type of secondary connection, ventilation, etc. • Example vault size for single 2500 kVA, 3 phase, CS transformer: 16 feet wide by 21 feet long by 15 feet high with double doors in a 16 foot wall • If room height is low, secondary bus duct may not be viable. • Minimum in-building vault dimensions are located in Design Standard 9255.14.
5.2.	Direction and location of ceiling channel	—	• If ceiling channel required, the maximum ceiling height is 18 feet; for ceiling heights greater than 18 feet, typical SCL equipment will require special earthquake bracing
5.3.	Location and number of vault pulling irons	NCI-62	• Used to pull cable or move equipment
5.4.	Locations for transformer seismic anchors	—	• CS units must be attached to the in-building vault floor • Minimizes or prevents damage in an earthquake, improving estimated time of restoration for customers • SCL steel shop and paint shop install and paint anchors after transformer is placed in final location
5.5.	Locations and number of ground rods	—	• Ground rods typically located in the corners • Typically 4 ground rods required for a single transformer vault
5.6.	Location, size and number of doors, including height of door sills	0026.10 (SY) 0036.4 (CS)	• Doors should be located to maximize crew ability to leave the vault during an emergency. • Doors should also be located to easily install equipment. • Two door locations are recommended and of those one is for equipment and the other is a personnel door for egress. • For SY transformers, equipment doors shall be minimum 3 feet 6 inches wide by 6 feet 8 inches high • For CS transformers, equipment doors shall be minimum 7 feet wide by 10 feet high

		basis/ reference	discussion/comments
5. SCL Project Specific, continued			
5.7.	Required air flow for vault ventilation in cubic feet per minute (cfm)	9251.00	• Calculated per Ventilation section of Design Standard 9251.00. • Calculated for largest transformer(s) that could be installed.
5.8.	Location and type of customer's service connection (Service Entrance)	U11-9.1	• SCL prefers bus duct over cables • For bus duct clearances, see U11-9.1. • Customer must bring in NEC sized bus duct or cable into the in-building vault. • Transformer spades are limited to receiving six cables. • Homacs or Blackburns or cable tie boxes can be used to receive additional cables. • 25 feet of cable generally proves to be adequate
5.9.	Size, number, type, and routing of high voltage conduit from the SCL distribution system to the customer's in-building vault, including conduit on poles, conduit encasement, and trench backfill	U2-10 U2-11 U7-10.2 U12-1.4	• Customer's contractors typically install conduit on private property and in right-of-way • Customer's contractor installs first 10 feet of conduit on the pole
6. Other Agency Requirements			
6.1.	Before a customer can be connected to the Seattle City Light electrical system, the building electrical system must pass electrical inspection by the authority having jurisdiction. (Refer to the agency issuing the electrical permit.)	—	• Seattle Electrical Code 80.50 requires an electrical inspection within Seattle • Electrical installations are inspected as required by state law, RCW 19.28.101.
6.2.	Before a customer can be connected to the Seattle City Light electrical system within the City of Seattle, the in-building vault must pass vault inspection by the Department of Planning and Development inspector.	—	• DPD inspects up to the inside of the in-building vault wall surface.
6.3.	The customer is responsible for the in-building vault to satisfy applicable laws, ordinances, and requirements regarding sound and vibration levels. (Refer to the Washington Administrative Code, King County Ordinances, and city ordinances)	—	• Utility transformers make a 60 Hz humming sound normally. • SCL requires transformers to meet NEMA Standard TR 1-1993, Section 05 (Table 0-3). • See http://www.federalpacific.com/university/transnoise/chapter6.html

	basis/ reference	discussion/comments
7. Required Customer Submittals		
In addition to the submittals required in the SCL Application for Electric Service packet, the following submittals must also be received and approved by SCL before construction of the in-building vault room:		
7.1. The customer's in-building ventilation system shall be designed by an qualified HVAC consultant	—	• SCL engineers are not experts in HVAC systems and cannot approve HVAC designs
7.2. The customer shall submit drawings showing the design of the in-building vault ventilation system, including intake and exhaust, fans, louvers, dampers, thermostats, air flow direction, etc. Location of all devices and apparatus shall be shown on a plan drawing.	—	• SCL wants to confirm that the vault ventilation meet SCL requirements
7.3. All topics addressed in the SCL project specific requirements section shall be shown on customer drawings of the in-building vault room	—	• SCL wants to confirm that the customer has met SCL requirements
8. SCL Required Points of Inspection		
Before a customer can be connected to the Seattle City Light electrical system, Seattle City Light personnel shall inspect:		
8.1. Vault Construction per SCL Construction Requirements Package and SCL Construction Standards and Construction Guidelines	—	Inspected by SCL's Electric Service Representatives and Electric Service Engineers and/or SCL Design Engineers
8.2. Grounding		
8.2.1. Grounding resistivity, generally, 25 ohms or less	—	Inspected by SCL's Electrical Reviewers
8.2.2. Exothermic welds, if any, before they become inaccessible	—	Inspected by SCL's Electric Service Representatives and Electric Service Engineers
8.3. Duct Bank Installation	U2-10 U2-11 U7-10.2 U12-1.4	
8.3.1. Trench	—	Inspected by SCL's Electric Service Representatives and Electric Service Engineers

		basis/ reference	discussion/comments
8. SCL Required Points of Inspection, continued			
8.3.	Duct Bank Installation, continued		
8.3.2.	Bedding	—	Inspected by SCL's Electric Service Representatives and Electric Service Engineers
8.3.3.	Backfill	7150.00	Inspected by SCL's Electric Service Representatives and Electric Service Engineers
8.4.	Conduits	—	
8.4.1.	Cleaning and mandrelling	U2-11.40	Inspected by SCL's Electric Service Representatives and Electric Service Engineers
8.4.2.	Pull Tape installation	U2-11.40	Inspected by SCL's Electric Service Representatives and Electric Service Engineers
9. Easements			
9.1.	Seattle City Light requires an easement if SCL equipment is needed to serve more than one parcel and that equipment is located on private property. In that case, an easement is required over the entire area in which the SCL distribution system will be located.	—	• Easements should cover equipment location and duct bank pathways • SCL personnel require 365/24/7 access to SCL equipment • Easements on a property owned by a third party may be required
9.2.	If required, a new easement must be secured or the customer shall provide proof of an existing easement to Seattle City Light, before the service will be connected.	—	• Customer is responsible for providing proof of easements
9.3.	The easement document is prepared separately from the project specific Customer Requirements Package.	—	• Real Estate unit prepares easement documents with information submitted by the customer and SCL engineering
10. General Requirements			
10.1.	In-building vaults shall be dry spaces and no standing water shall accumulate in the vault. The customer shall take adequate measures to prevent water from entering the in-building vault via wall, floor, or ceiling penetrations or via seepage. It is the responsibility of the customer to maintain the vault as a dry space.	—	• If water enters an in-building vault, it could migrate to other spaces within the building

	basis/ reference	discussion/comments
10. General Requirements, continued		
10.2. The vault is not to be used for any other purpose except for SCL electrical distribution equipment	—	• The in-building vault is used for high voltage electrical distribution equipment and poses a danger to unqualified personnel • The vault is not sized for storage of replacement parts
10.3. Vault shall conform to the requirements of Figure 1	—	• Graphic illustrates typical looped radial vault layout

Figure 1, Preferred layouts for in-building transformer vault room

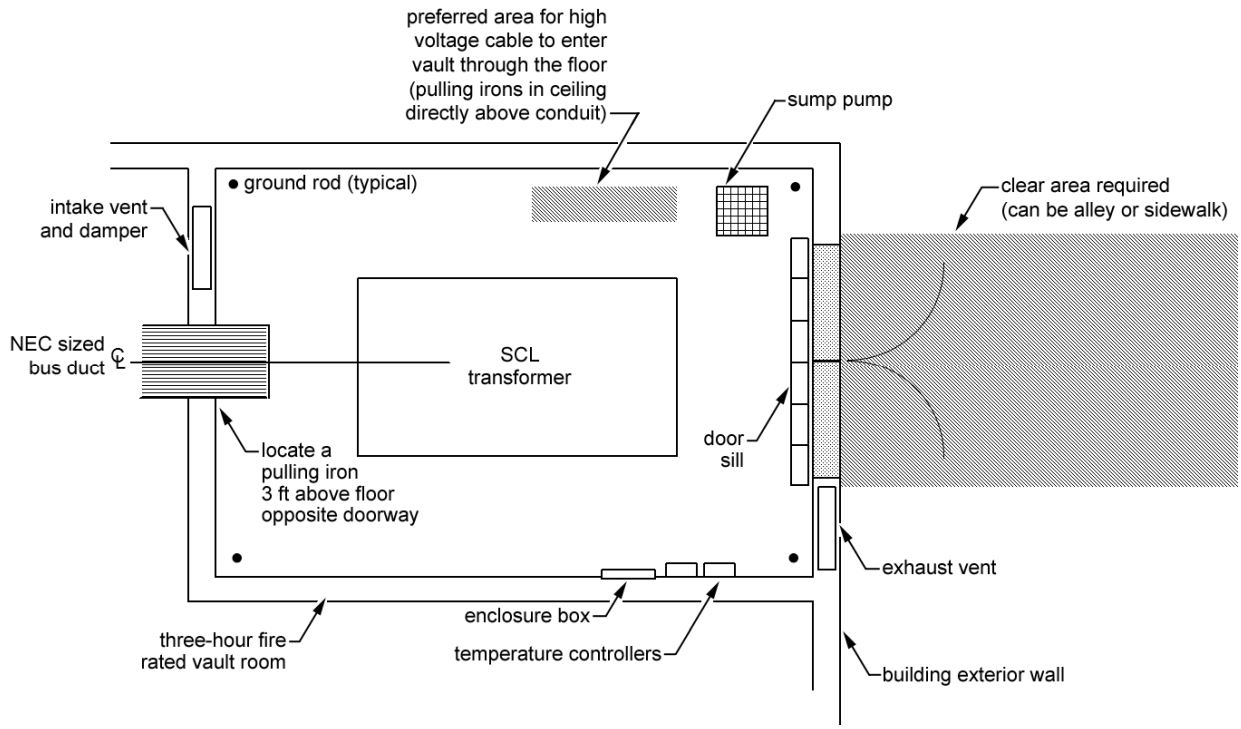

	basis/ reference	discussion/comments
11. Vault Grounding		
11.1. General Requirements	U9-7.3 U9-7.5 U9-7.7 U11-8	

	basis/ reference	discussion/comments
11. Vault Grounding, continued		
11.1. General Requirements, continued		
11.1.1. A driving head shall be used to prevent damage to the ground rod threads.	—	• SCL typically uses a gad on a pneumatic tool • Electrical tape can be used to protect the threads; it is removed after installation • Threads are protected in case an additional rod is required to reduce ground resistance
11.1.2. The space between the rods and the floor shall be caulked and grouted to prevent the entrance of water.	—	
11.2. Vaults with Floor Contacting Soil		
11.2.1. Grounding for the vault shall consist of four, 5/8 inch by 8-foot copper-clad steel ground rods, driven into compacted soil near the corners of the vault.	—	• Ground rods are installed in the corners to minimize the tripping hazard. • Historically successful at SCL at achieving 25 ohms or less ground resistance
11.2.2. Each rod shall be placed 6 inches (plus/minus 0.5 inches) from the walls.	—	• Installation space is required for ground rods and ground clamps
11.2.3. Rods shall extend 6 inches above the vault floor.	—	• Available for ground clamp connections
11.3. Vaults with floor not Contacting Soil		
11.3.1. Grounding for the vault shall consist of four, 5/8 inch by 8 foot copper-clad ground rods, driven into compacted soil within 40 feet of the vault floor and within the customer's property. Exact location will be shown on project specific drawing.	—	• Historically successful at SCL at achieving 25 ohms or less ground resistance • Ground rods on completely on customer's property are isolated from damage caused by other's use of the right-of-way
11.3.2. Ground rods shall be spaced a minimum of 8 feet apart.	—	• Distance improves effective grounding
11.3.3. Install one 500 kcmil bare copper, soft drawn, concentric-stranded conductor, to each pair of the ground rods. These two 500 kcmil conductors shall extend 6 feet into the vault from opposite corners. Each conductor shall be attached to each pair of ground rods with an exothermic weld (Cadweld®).	—	• Paralleling each pair of ground rods, saves on conductor costs • Exothermic welds are good long term connections • 500 kcmil conductor provides adequate fault current path for 90 kA for 30 cycles assuming X/R=40

	basis/ reference	discussion/comments
11. Vault Grounding, continued		
11.3. Vaults with floor not Contacting Soil, continued		
11.3.4. The two grounding conductors shall be kept 8 feet apart from each other and from any other electrical ground cable	—	• Distance improves effective grounding
11.3.5. Outside the vault, the grounding conductors shall be protected by non-metallic electrical conduit when not in contact with concrete or soil.	NEC 250.64 (B), 2008	• Mechanical protection for grounding conductor
12. Vault Lighting		
12.1. The customer shall install vault lighting and receptacles per City Light Construction Guideline U10-6/NTP-60.	U10-6	
12.2. City Light will connect the power for the lights and receptacles.	—	• Connect from transformer secondary • Install autotransformer if necessary • Do not install from the customer's panel. SCL wants to maintain control of the lighting power source
13. Vault High Voltage (Primary) Entrance		
13.1. General Requirements		
13.1.1. Conduit shall be rigid galvanized steel or PVC (Schedule 40) or fiberglass.	—	• SCL prefers PVC Schedule 40
13.1.2. For rigid galvanized steel and PVC (Schedule 40), all conduit bends shall be rigid galvanized steel.	—	• PVC conduit bends can be damaged during cable pulls.
13.1.3. A maximum of three 90-degree bends of 3-foot radius are allowed in the primary conduit run, including bends at the base of the pole.	—	• Bends increase the required cable pulling design tension (see 9246.10) • Maximum 270 degrees of bend for 100 feet of 4-inch conduit with 1/0 cable, typically works • Engineer should use cable pulling spreadsheet in non-typical situations

	basis/ reference	discussion/comments
13. Vault High Voltage Entrance, continued		
13.1. Conduit in Right-of-Way and Easements, continued		
13.1.4. Conduit encasement and trench backfill shall be specified in the project specific customer requirement package.	—	
13.1.5. Conduit shall have a minimum 36 inch cover.	U2-10 U2-11 U12-1.4	• Reduces the likelihood of a dig in.
13.1.6. After conduit installation, the conduit shall be cleaned and mandrelled per Construction Guideline U2-11.40/NDK-40.	U2-11.40	• Foreign particles in the conduit make cable pulling more challenging (increased friction, blockages, etc.)
13.1.7. Install a pulling hand-line and marking tape as per Construction Guideline U2-11.40/NDK-40.	U2-11.40	• Speeds up the cable pulling process.
13.2. Conduit in Right-of-Way and Easements		
13.2.1. Install below grade conduit in Public Right-of-Way and Easements per Construction Guidelines U2-10/NDK-50 and U2-11.	U2-10 U2-11	• SCL Construction Guidelines that covers electrical conduit topics, including trenching and depth.
13.2.2. For conduit above grade on poles, provide and install conduits from the specified starting point to the power pole per Construction Guidelines U7-10/NDK-70 and U7-10.2/ NDK-90. Exact location and conduit type shall be included in the project specific Customer Requirement Package.	U7-10 U7-10.2	• SCL requires rigid galvanized steel for conduit bends and up the first 10 feet of the pole, except for fiberglass conduit.
13.3. Conduit on Private Property, including within the in-building vault		
13.3.1. Install conduit on private property per Construction Guideline U12-1.4/NDK-60.	U12-1.4	• SCL Construction guideline that covers electrical conduit topics, including trenching and depth.
13.3.2. Shall be encased within a minimum of 6 inches of concrete within building.	—	• Reduces the likelihood of an accidental contact.

		basis/ reference	discussion/comments
13. Vault High Voltage Entrance, continued			
13.3.	Conduit on Private Property, continued		
13.3.3.	If surface of concrete encased conduit bank is visible within building it must be visibly marked with permanent "DANGER – High Voltage" signs over the concrete encased conduit bank's entire path within building to vault. Signs installed once per room or every 10 feet.	—	• Reduces the likelihood of an accidental contact.
13.3.4.	High voltage or primary entrances into vaults are cables in conduits.	—	• SCL preference
13.3.5.	Fire seal the cable installed in conduit for a three-hour rating using rated grout or fire-barrier caulk in order to protect migration of fire, smoke, and gas.	NEC 300-21, 2008 SBC Chap 7, 2006	• Protects against migration of fire, smoke, and gas through conduit system.
13.3.6.	Conduits entering the vault shall be supplied with closing plugs.	—	• Prevents water infiltration • SCL crews shall remove plugs as cable is installed • Crew to seal the conduit after cable installation
13.3.7.	Conduit shall enter the vault perpendicular to the vault wall no more than 18 inches from the ceiling or the walls.	—	• Racking cable that is a ways from a corner may require intermediate supports
13.3.8.	A minimum of 6 inches shall be allowed between the closest edge of the conduit and the ceiling, the floor or walls.	—	• Cable pulling is more challenging if there is limited space.
13.3.9.	Conduits entering the vault shall be provided and installed with end bells and shall be grouted both inside and outside the vault per Construction Guidelines U2-11/NDK-20.	U2-11	• Provide a smooth transition for cables from conduit to open conductors.
13.3.10.	Conduits entering the same vault corner but on adjacent walls shall be staggered and shall not enter on the same elevation.	—	• Cable entering one wall may block access to other conduits from an adjacent wall
13.3.11.	A minimum of 6 inches shall be allowed between the closest edge of the conduit and the ceiling or walls.	—	• Cable pulling is more challenging if there is limited space.

		basis/ reference	discussion/comments
14. Customer's Service Connection (Service Entrance)			
14.1.	General Requirements		
14.1.1.	Seattle City Light prefers that the customer provide NEC-sized bus duct into the in-building vault. NEC-sized cables in conduit are also acceptable.	—	• SCL prefers bus duct because it simplifies installation
14.1.2.	All service entrance penetrations shall be sealed, including bus duct, conduits, and cables.	SBC 422.12, 2006 NEC 300-21, 2008	• Sealed for water and smoke and fire
14.1.3.	Rotation of service bus bars or cables shall be clearly identified by the customer and in case of multiple services, it shall be consistent across all services	—	• SCL can match the customer's requested rotation • Important for rotating equipment such as motors and generators
14.2.	Service Entrance using Bus Duct		
14.2.1.	Provide and install NEC-sized secondary bus duct into the vault per Construction Guideline U11-9.1, page 1.	U11-9.1	• See U11-9.1 for bus duct requirements
14.2.2.	Brace and support the bus duct.	—	• Using hangers or supports as specified by bus duct manufacturer
14.2.3.	Label each bus bar for phasing	—	
14.2.4.	If multiple bus ducts, label each bus duct with service being fed	—	• SCL wants service destination marked to document load • In the case of multiple transformers, each customer's service should be fed by one transformer. This avoids paralleling of transformers which would result in circulating currents.
14.2.5.	The bus duct is centered on the wall	—	• If both the transformer and bus duct are centered on the same axis, it simplifies connection. • If the customer prefers a different location, SCL must approve alternate location.
14.3.	Service Entrance using Cables in Conduit		
14.3.1.	Any conduit that extends beyond the face of the vault surface shall be rigid galvanized steel	—	• RGS is strong, resisting damage to cables, and is also self-supporting

		basis/ reference	discussion/comments
14. Customer's Service Connection, continued			
14.3.	Service Entrance using Cables in Conduit		
14.3.2.	Conduits entering the vault shall be supplied with closing plugs.	—	• SCL crews shall remove plugs as cable is installed
14.3.3.	Conduit shall enter the vault perpendicular to the vault wall no more than 18 inches from a corner.	—	• Cable pulling and racking is more challenging if the cable is too far away from a corner.
14.3.4.	Conduits entering the vault shall be provided and installed with end bells and shall be grouted both inside and outside the vault per Construction Guidelines U2-11/NDK-20.	U2-11	• Provide a smooth transition for cables from conduit to open conductors.
14.3.5.	Conduits entering the same vault corner but on adjacent walls shall be staggered and not enter on the same elevation.	—	• Cable pulling and racking is more challenging if the cable comes out at the same elevation on adjacent walls.
14.3.6.	If conduit is entering through the floor, it shall extend 18 inches above the floor	—	• In case of any liquid on the vault floor, SCL does not allow liquid to migrate through the conduit system.
14.3.7.	Label each cable to identify phasing	—	
14.3.8.	If multiple services, label each set of cables with the service being fed	—	• SCL wants service destination marked to document load • In the case of multiple transformers, each customer's service should be fed by one transformer. This avoids paralleling of transformers which would result in circulating currents.
14.3.9.	Fire seal the cable installed in conduit for a three-hour rating using rated grout or fire-barrier caulk in order to protect migration of fire, smoke, and gas.	NEC 300-21, 2008	• Protects against migration of fire, smoke, and gas through conduit system.
15. Vault Document Enclosure			
15.1.	Install a permanent, weatherproof clear document enclosure box on the vault wall near the light switch or the thermostats	—	• Typically used for equipment transportation and equipment storage • Easement documents can also be stored here
15.2.	The document enclosure shall be adequate for permanently storing 8-1/2 by 11-inch documents.	—	

	basis/ reference	discussion/comments
16. Requirements of Other Utilities		
16.1. SCL Construction Standards and Guidelines do not cover the installation of telecommunications or any other utility's equipment serving a project.	—	• Customers should contact other utilities directly for their current requirements.
16.2. City Light does not coordinate with other utilities for installations in the public right-of-way. However, City Light may install conduits and small pull boxes in the right-of-way for other utilities which are coincident to City Light construction. This information can be requested for specific projects individually if the customer obtains the current written specifications from the utility.	—	• Customer can request installation for other utilities by providing their exact needs of conduit and pull boxes.

17. References

0026.10; "Distribution Transformer Single Phase, Subsurface-Type, Natural Ester Fluid;" Material Standard; SCL

0036.4; "Commercial Underground-Type Transformer, Three-Phase, Unfused, 26 kV;" Material Standard; SCL

0751.00; "Customer Requirements, In-Building Transformer Vaults, Network and Looped Radial Systems;" Construction Guideline; SCL

0751.60; "Concurrent Customer Requirements, In-Building Transformer Vaults, Looped Radial System;" Construction Guideline; SCL

7150.00; "Fluidized Thermal Backfills;" Material Standard; SCL

9251.00; "Discussion of Customer Requirements, In-Building Transformer Vaults, Network and Looped Radial Systems;" Design Standard; SCL

9255.14; "Minimum In-Building Vault Dimensions, Looped Radial System;" Design Standard; SCL

9223.07; "Minimum In-Building Vault Dimensions (Looped Radial System);" Design Standard; SCL

Hall, Alan; SCL Standards Engineer, subject matter expert for 9251.60 (alan.hall@seattle.gov)

NCI-62; "Pulling Iron Installation, In-Building Vaults, Network System;" Construction Guideline; SCL

NEMA TR 1-1993; *Transformers, Regulators and Reactors* (R2000)

NFPA 70 - NEC; *National Electrical Code*; 2008

Requirements for Electric Service Connection; Seattle City Light, 2007

SCL 2007-2008 In-Building Vault Subcommittee: Shayan Arya, Ed Chu, Toni Gamble, Laurie Hammack, Bob Hansen, Gerard Legall, Eivind Perander, Uzma Siddiqi, Quang Ta, Roger Tapp

Seattle Building Code; 2006

Seattle Electrical Code; 2008

Siddiqi, Uzma; SCL Standards Engineer, subject matter expert, and originator of 9251.60 (uzma.siddiqi@seattle.gov)

U2-8 (canceled); "In-Building Transformer Vaults (Non-Network Area);" Construction Guideline; SCL

U2-10/NDK-50; "Electrical Conduit and Facilities in Public Rights-of-Way;" Construction Guideline; SCL

U2-11; "Installation of Nonmetallic Conduit with Concrete or FTB Encasement;" Construction Guideline; SCL

17. References, continued

U2-11.40/NDK-40; "Mandrelling and Cleaning of Ducts and Conduits;" Construction Guideline; SCL

U7-10/NDK-70; "Conduit Risers on Poles;" Construction Guideline; SCL

U7-10.2/NDK-90; "Primary Conduit Riser Pole Base Detail;" Construction Guideline; SCL

U9-7.3; "Grounding and Connection Diagram, Single Phase 26 kV Distribution Transformer;" Construction Guideline; SCL

U9-7.5; "Transformer Installation, Grounding, and Connections – 120/ 240 and 240/ 480 Volts, 3 Phase, 4 Wire;" Construction Guideline; SCL

U9-7.7; "Transformer Installation, Grounding and Connections – 208Y/ 120, 240Y/ 138, and 480Y/ 277 Volts, 3 Phase, 4 Wire, Subtractive Polarity;" Construction Guideline; SCL

U10-2 (canceled)**;** "Transformer Service Vaults and Padmounts, Customer's Responsibility, Outside Network Area"; Construction Guideline; SCL

U10-2.1 (canceled)**;** "Transformer Service Vault, In-Building, Dry, Outside Network Area"; Construction Guideline; SCL

U10-2.2 (canceled)**;** "Transformer Service Vault In-Building, With Outdoor, Below Ground Access, Outside Network Area"; Construction Guideline; SCL

U10-6/NTP-60; "Lighting and Sump Pump Installation for Single Transformer Vaults;" Construction Guideline; SCL

U11-8; "Commercial Subway Transformer, 750 through 2500 kVA, Standard Installation;" Construction Guideline; SCL

U11-9.1; "Bus Extensions and Cable Tap Boxes;" Construction Guideline; SCL

U12-1.4/NDK-60; "Installation Details for Underground Services Nonmetallic and Rigid Steel Conduit on Private Property;" Construction Guideline; SCL

MINIMUM IN-BUILDING VAULT DIMENSIONS, LOOPED RADIAL SYSTEM

1. Scope

This standard provides minimum vault dimensions for looped radial, in-building vaults containing transformers and does not apply to vaults containing switchgear. Additional space may be required for egress or for additional equipment.

2. Application

The intended audience for this design standard is SCL engineering personnel.

3. Discussion

Required minimum vault dimensions are provided for continuity of design information that was previously provided in Construction Guidelines U10-2.1 and U10-2.2, both now canceled. Design information is systematically being removed from Construction Guidelines and relocated to Design Standards.

4. Requirements

Required minimum vault dimensions for transformer-only vaults, see Table 1.

Table 1, Minimum Vault Size

Transformer Size, kVA	Required Minimum Vault Dimensions, ft	
	Vault Dimensions L x W x H	Vault Door Height
167	10 x 8 x 8	8
300	12 x 8 x 8	8
500	14 x 10 x 8	8
750 to 1500	14 x 10 x 10	8
2000 to 2500	14 x 10 x 10	10

5. Reference

0026.10; "Distribution Transformer Single Phase, Subsurface-Type, Natural Ester Fluid;" Material Standard; SCL

0026.2; "Distribution Transformer Single Phase, Subsurface-Type, Epoxy Encapsulated;" Material Standard; SCL

0036.4; "Commercial Underground-Type Transformer, Three-Phase, Unfused, 26 kV;" Material Standard; SCL

U10-2.1; "Transformer Service Vault In-Building – Dry, Outside Network Area;" Construction Guideline; SCL

U10-2.2 (canceled); "Transformer Service Vault In-Building; with Outdoor, Below Ground Access; Outside Network Area;" Construction Guideline; SCL

Siddiqi, Uzma; SCL Standards Engineer, originator of 9255.14 (uzma.siddiqi@seattle.gov)

standards coordinator	standards manager	unit director
Uzma Siddiqi	John Shipek	Pam S. Johnson

IN-BUILDING VAULT VENTILATION, POSITIVE AND NEGATIVE PRESSURE, NETWORK AND LOOPED RADIAL SYSTEMS

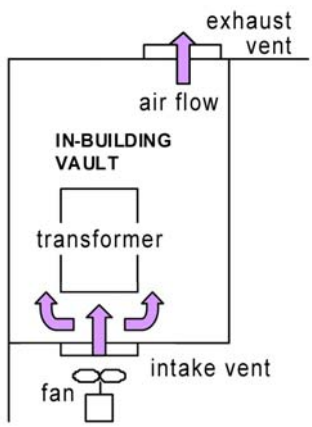

Figure 1 – Positive Pressure Ventilation System Schematic

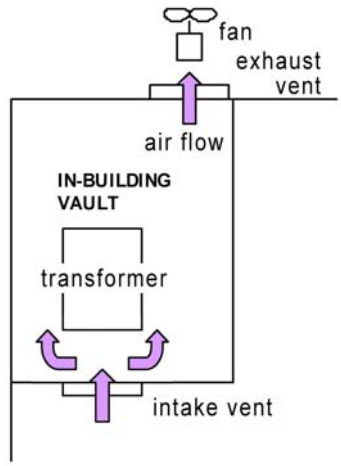

Figure 2 – Negative Pressure Ventilation System Schematic

1. Scope

This standard describes positive and negative mechanical ventilation within in-building vaults. This standard is applicable to vaults in the network and looped radial areas. This standard is not intended for passive ventilation systems.

2. Application

This design standard may be used to clarify type of ventilation for SCL engineering, customer service, inspecting, and reviewing personnel.

3. Discussion/ Background

This design standard has been developed to minimize confusion surrounding SCL vault ventilation requirements.

4. Definitions

Positive Pressure: The ventilation fan is located on the intake vent and pushes air into the vault room.

Negative Pressure: The ventilation fan is located on the exhaust vent and pulls air from the vault room.

5. References:

Lee, Dennis, SCL Engineer and subject matter expert (dennis.lee@seattle.gov)

Siddiqi, Uzma; SCL Standards Engineer, subject matter expert, and originator of 9255.50 (uzma.siddiqi@seattle.gov)

standards coordinator	standards manager	unit director
Uzma Siddiqi	John Shipek	Pam S. Johnson

UNDERGROUND AND IN-BUILDING MCLF PLACEMENT, 26.4 KV LOOPED RADIAL, GROUNDED-WYE SYSTEM

1. Table of Contents

1. Table of Contents 1
2. Scope 1
3. Application 1
4. Historical Background 1
5. Definitions and Legend 2
6. Guiding Design Principles 2
7. Consequences of the Guiding Design Principles..... 3
8. Operations Practices and Equipment Notes 3
9. References 3
10. Case Study Examples 4
10.1 *Case A: One Circuit, Unprotected Cable*
Preferred Design 4
Acceptable Design 4
10.2 *Case B: Two Circuits, Unprotected Cable*
Preferred Design 5
Acceptable Design 6
Not Acceptable Design 6
10.3 *Case C: Three Circuits, Unprotected Cable*
Preferred Design 7
Not Acceptable Design 8
10.4 *Case D: Unprotected Through Cable*
Preferred Design 1 9
Preferred Design 2 9
Not Acceptable Design 10
10.5 *Case E: Splice in Through Cable*
Preferred Design 11
Not Acceptable Design 11
10.6 *Case F: Complex Design with Vista Switch*
Preferred Design 12
Not Acceptable Design 13

2. Scope

This design standard covers the electrical and general physical placement of molded current limiting fuses (MCLF) in new underground and in-building vaults. MCLFs limit fault current and provide single-phase protection. They are a dead-front device suitable for dry or submersible operation. SCL currently stocks this fuse in three current ratings: 25A (012276), 40A (012277) and 65A (012278).

2. Scope, continued

This Standard does not address specific vault size, working clearances, or physical placement of MCLF fuses within a vault.

This Standard does not apply to fuses installed in Trayer, canister-type fuse holders or overhead backup current limiting fuses or network cable limiters.

3. Application

This document provides direction to engineers about the preferred the electrical and general physical placement of MCLFs used to protect personnel and distribution equipment. Designs that are Preferred, Acceptable, and Not Acceptable are presented to improve clarity and increase understanding. The goal is to minimize cost and required physical space while at the same time maximizing:

- reliability
- maintainability
- operability
- employee and public safety

Preferred designs maximize these listed qualities.

Acceptable designs carry some negative aspects and may only be utilized with a project specific variance from the design engineer's supervisor.

Not Acceptable designs shall no longer be engineered and constructed and are included here to show designs that should be avoided and why they should be avoided.

For the purposes of this standard, the term vault may mean in-building, in right-of-way (ROW), at-grade, below-grade, wet, or dry.

This Design Standard will be used by SCL design engineers, construction crews, and inspectors.

4. Historical Background

In 1974, SCL began installing current limiting fuses in the overhead distribution system to reduce the exposure of personnel to the high energies released during an electrical short circuit. Where lines went underground, the current limiting fuse and fused

4. Historical Background, continued

cutout were installed on the terminal pole and the distribution cable was protected against the higher fault current.

As SCL expanded its underground system, the need for below grade switching and a reliable dead-front current limiting fuse became necessary. Faults on SCL's 26.4 kV radial system are particularly hazardous for two reasons: high available fault currents and a grounded-wye system that shunts all fault current to ground at the fault location. In contrast, single line-to-ground faults on SCL's 13.8 kV delta network system return on the other two phases.

In early 2008, a product defect with MCLF fuses prompted a reevaluation of SCL's design and construction philosophies regarding exposure to unprotected cable. As a result, SCL is currently investigating the use of arc suppression blankets as permanent installations to better protect personnel (knowingly or unknowingly) occupying a vault containing cable, elbows, splices, and other equipment that is not preceded by a current limiting fuse. Arc suppression blankets offer an alternative to more costly, impractical, and/or ineffective methods of shielding personnel from high energy faults.

The arc suppression blanket being considered for trial use is rated to deflect the thermal energy of a 25 kA arc blast. To be effective, the blanket must be properly anchored and positioned. Arc suppression blankets are not intended to insulate from electric shock. Contact Standards for more information.

5. Definitions and Legend

Key Words	Definitions
acceptable	conceptual design that is adequate to satisfy a need but has some negative consequences
arc suppression blanket	A multi-layered fabric blanket specifically designed to offer protection against the thermal energy of an arc blast. To be effective, blanket must be properly anchored. Arc suppression blankets are still in the pilot project stage at SCL. Contact Standards for more information.
electrical work in vault	any work done in an electrical vault, excluding visual inspection, photography, and similar tasks
MCLF	molded current limiting fuse
non-electrical work in vault	visual inspection, photography and similar tasks
not acceptable	conceptual design that is not adequate; SCL shall not design or construct such new installations
preferred	conceptual design that is the most desirable; all new installations should meet this design
protected	the closest upstream protective device contains a current-limiting element
protective barrier	see arc suppression blanket
ROW	right-of-way
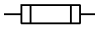	fuse
	primary splice
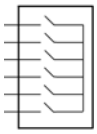	S&C Vista switch
unprotected	the closest upstream protective device is the station feeder breaker
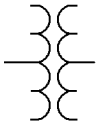	transformer, one three-phase transformer or three single-phase transformers connected in a bank

6. Guiding Design Principles

This Design Standard is based on the following guiding principles.

- Unprotected cable poses a significantly greater hazard to personnel than protected cable.
- Minimize personnel exposure to unprotected cables, elbows, splices, and other equipment

6. Guiding Design Principles, continued

- Conformance to National and Washington State Safety Standards
- A single vault may contain more than one circuit of protected cable (single or three phase)
- A single vault may contain a maximum of one circuit of unprotected cable
- Protected and unprotected cables shall not share a vault
- When a MCLF fuse operates, the entire assembly consisting of a main fuse body and two end modules is replaced.
- MCLFs are the least preferred method of applying current-limiting fuse protection to the 26.4 kV looped radial system. This standard assumes other, preferred methods have been considered and ruled out as viable options.
- Arc suppression blankets, applied in conjunction with the changes cited in this design standard, are effective at protecting personnel from the hazards of a high energy fault.

7. Consequences of the Guiding Design Principles

- Personnel exposure to energized unprotected cables and other devices is reduced, because unprotected cables do not share a vault with equipment that requires regular or periodic access, such as distribution transformers.
- MCLF fuses shall be in their own vault or fuse chamber, because they have unprotected cable and elbows on their line side.
- Improvements will be seen in reliability, maintainability, and operability, because the number of circuits that need to be de-energized when electrical work is performed in a vault is minimized.

8. Operations Practices and Equipment Notes

- MCLFs shall be de-energized at upstream switch before entry to perform electrical work
- S&C Vista switches shall only be operated using a portable operator or remotely located pushbutton outside the vault
- Obtain "Hold Open" prior to performing electrical or non-electrical work near unprotected cable (i.e., disable relay reclosure at substation). Hold Opens generally require one day notice to the System Control Center.
- In early 2008, a product defect with MCLF fuses required that all units in-service and in stock be returned to the manufacturer for inspection, re-work, and electrical testing. Only MCLF fuses with a yellow label with black letters reading "TESTED AT 40KV / 1 MINUTE" should be considered fit for use. Refer to Safety Information Bulletin dated March 10, 2008 for proper procedure around MCLF fuses that are not marked as such.
- MCLF fuses do not vent gases when they operate.
- For the purposes of this standard, the electrical hazard of an MCLF shall be considered equal to that of a 600A elbow.
- The use of permanently installed arc suppression blankets does not eliminate the need for personal protective equipment (PPE).

9. References

6840.1.1; "Fault Limiter, General Purpose Current-Limiting Fuse, 'Type ET'"; Material Standards; SCL

6849.5; "Fuse Holder and Mounting Rack, Submersible, Single-phase, 15.5 kV, 100 Ampere"; Material Standards; SCL

Detter, Chris; SCL Standards Engineer, subject matter expert (chris.detter@seattle.gov)

Mimier, Dennis; SCL Standards Construction Supervisor, subject matter expert (dennis.mimier@seattle.gov)

PG-PC-0906; Protection and Control Product Selection Guide; Thomas & Betts (Elastimold)

Russo, Dave; SCL Engineer, subject matter expert (dave.russo@seattle.gov)

Shipek, John; SCL Standards Engineer, subject matter expert (john.shipek@seattle.gov)

Siddiqi, Uzma; SCL Standards Engineer, subject matter expert and originator of 9256.10 (uzma.siddiqi@seattle.gov)

10. Case Study Examples (Cases A through F)

In the following case study examples (Case A through Case F) we represent SCL distribution system design problems in one-line drawings. The design options for each case are presented in order with the **preferred** design first, followed by the **acceptable** designs (where shown), and finally, the **not acceptable** design (where shown). See section 5 for definitions and the legend and Section 3 for an understanding of the ranking system, **preferred, acceptable, and not acceptable.**

10.1 Case A: One Circuit, Unprotected Cable

Preferred Design, Case A

- Protected and unprotected circuits should not share a vault
- Within transformer vault, no exposure to energized unprotected cables or elbows
- De-energize MCLF vault at switch before entry to perform work

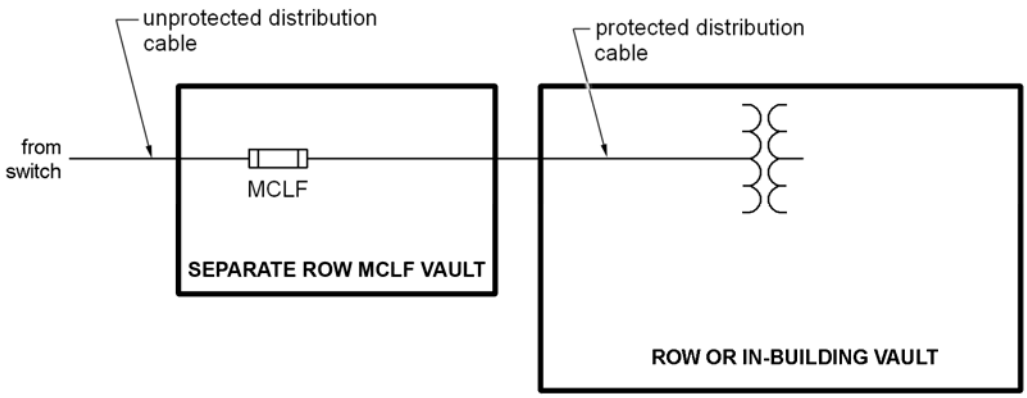

Acceptable Design, Case A

- See Preferred Design, Case A**;** *note*, this Acceptable Design option requires a project specific variance from the design engineer's supervisor
- Negative: Personnel exposure to unprotected distribution cable and elbows. Either de-energize or obtain "Hold Open" when working in vault.
- Retrofit: Consider installation of protective barrier in existing SCL vaults

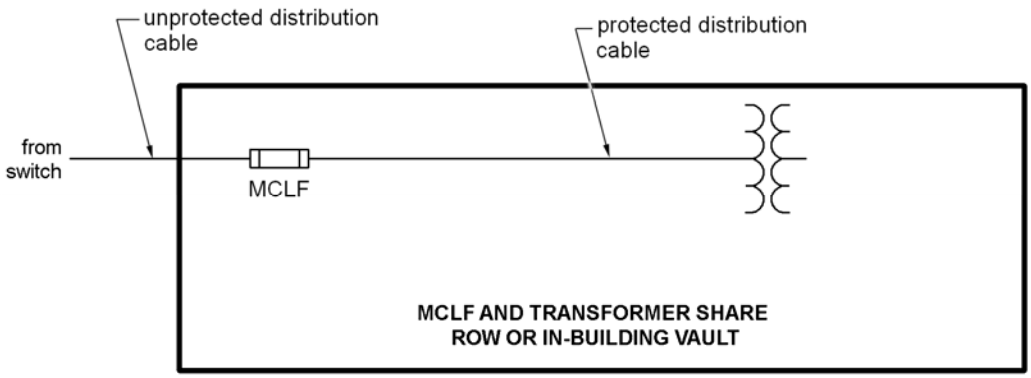

10.2 Case B: Two Circuits, Unprotected Cable

Preferred Design, Case B

- Protected and unprotected circuits should not share a vault
- Within transformer vault, no exposure to energized unprotected cables or elbows
- De-energize MCLF vault at switch before entry to perform work

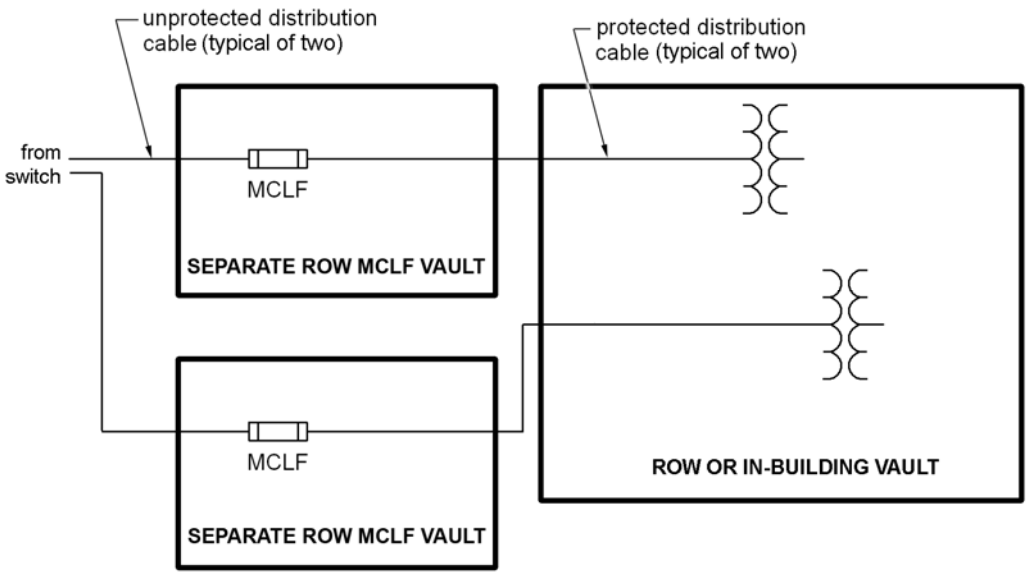

10.2 Case B: Two Circuits, Unprotected Cable, continued

Acceptable Design, Case B

- See Preferred Design, Case B**;** *note,* this Acceptable Design option requires a project specific variance from the design engineer's supervisor
- Negative: Two circuits in one MCLF vault means that both circuits need to be de-energized to work on one

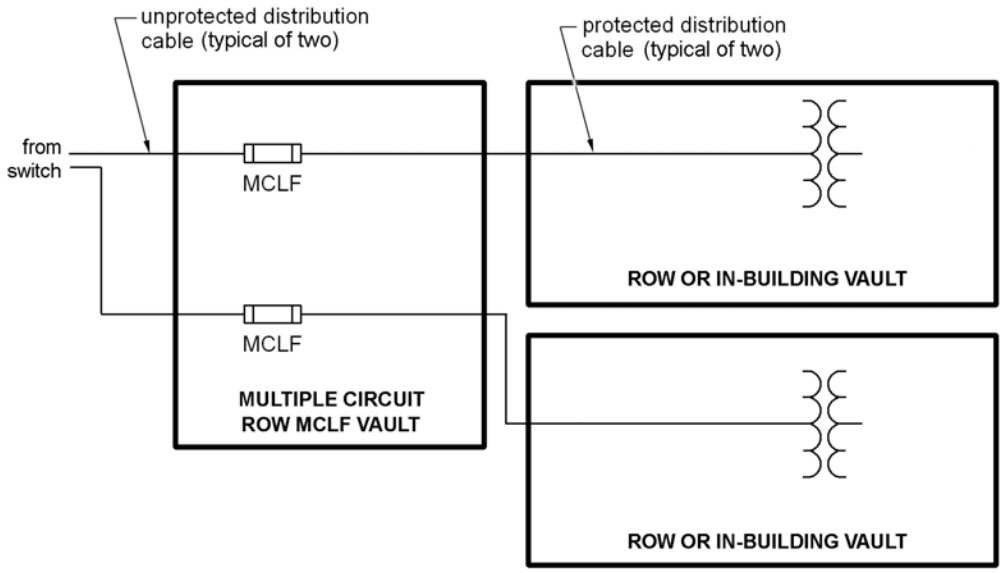

Not Acceptable Design, Case B

- Not acceptable, see Preferred Design, Case B; this Not Acceptable Design option shall not be engineered or constructed.
- Negative: Two circuits in one vault means that both circuits need to be de-energized to work on one
- Negative: Personnel exposure to unprotected distribution cable and elbows. Either de-energize or obtain "Hold Open" when working in vault.
- Retrofit: Consider installation of protective barrier in existing SCL vaults

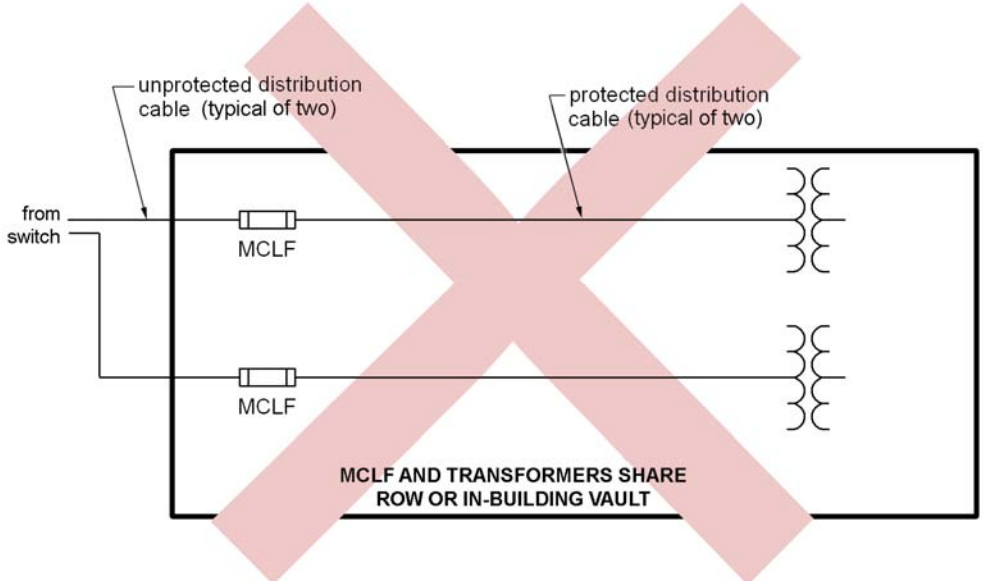

10.3 Case C: Three Circuits, Unprotected Cable

Preferred Design, Case C

- Protected and unprotected circuits should not share a vault
- Within transformer vault, no exposure to energized unprotected cables or elbows
- De-energize MCLF vault at switch before entry to perform work

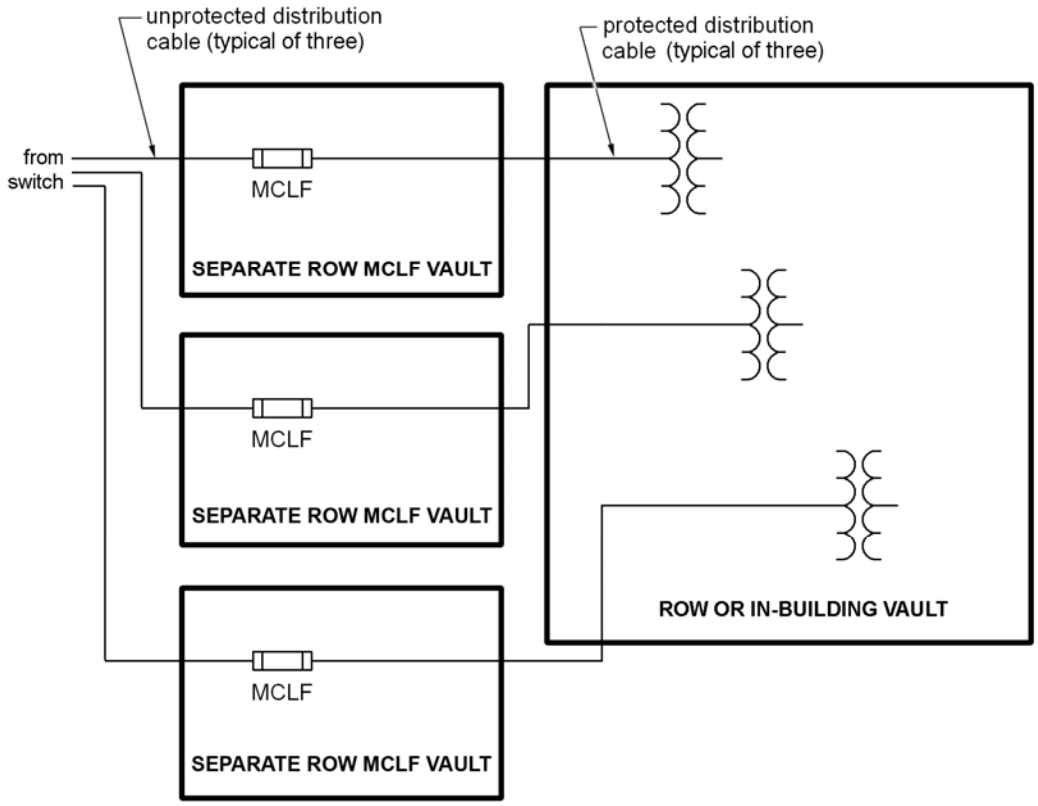

10.3 Case C: Three Circuits, Unprotected Cable, continued

Not Acceptable Design, Case C

- Not acceptable, see Preferred Design, Case C; this Not Acceptable Design option shall not be engineered or constructed in the SCL system.
- Negative: Multiple circuits in one vault means that all circuits need to be de-energized to work on one
- Negative: Personnel exposure to unprotected distribution cable and elbows. Either de-energize or obtain "Hold Open" when working in vault.
- Retrofit: Consider installation of protective barrier in existing SCL vaults

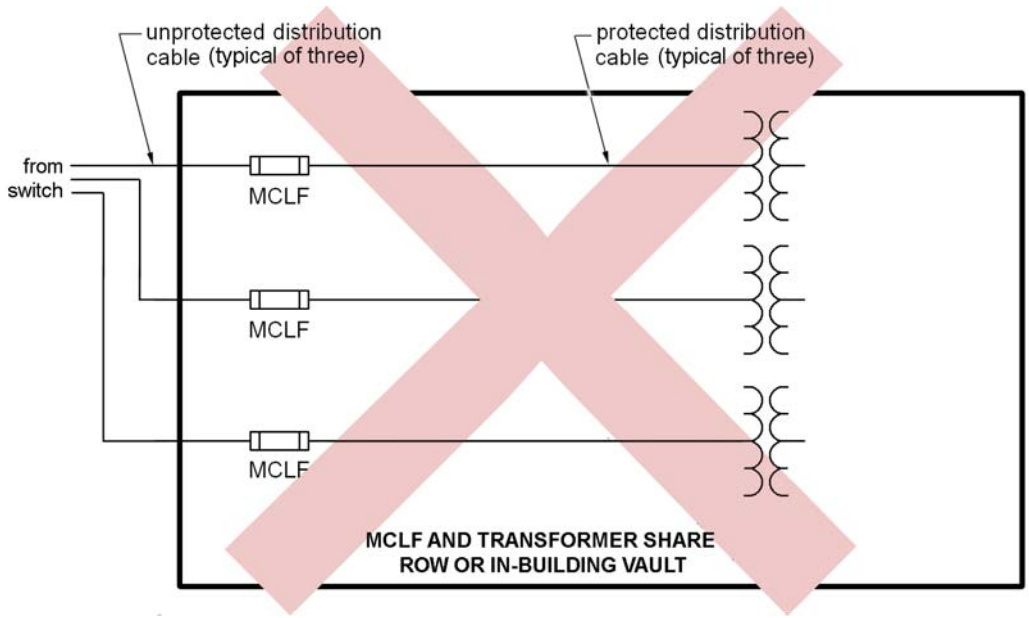

10.4 Case D: Unprotected Through-Cable

Preferred Design 1, Case D (two Preferred options for Case D)

- Protected and unprotected circuits should not share a vault
- Within transformer vault, no exposure to energized unprotected cables or elbows
- De-energize MCLF vault at switch before entry to perform work

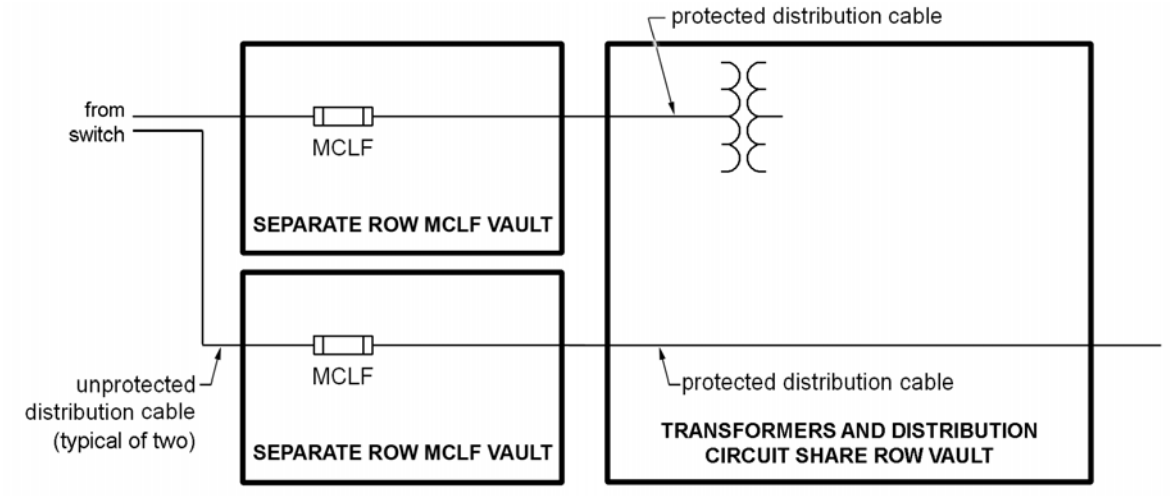

Preferred Design 2, Case D

- Protected and unprotected circuits should not share a vault
- Within transformer vault, no exposure to energized unprotected cables or elbows
- De-energize MCLF vault at switch before entry to perform work

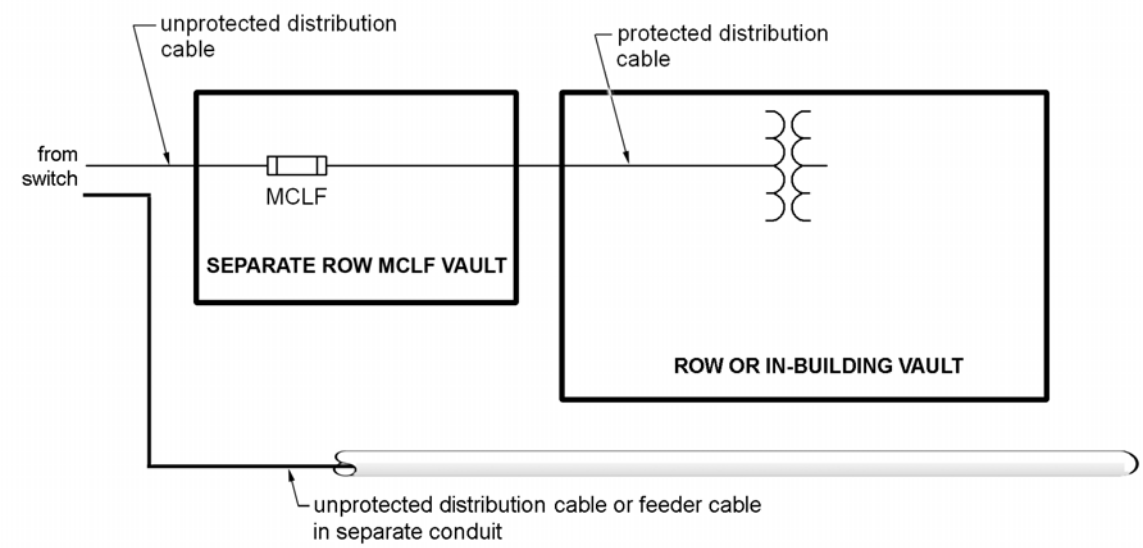

10.4 Case D: Unprotected Through-Cable, continued

Not Acceptable Design, Case D

- Not acceptable, see Preferred Design, Case D; this Not Acceptable Design option shall not be engineered or constructed in the SCL system.
- Negative: Personnel exposure to unprotected distribution cable and elbows. Either de-energize or obtain "Hold Open" when working in vault.
- Retrofit: Consider installation of protective barrier in existing SCL vaults

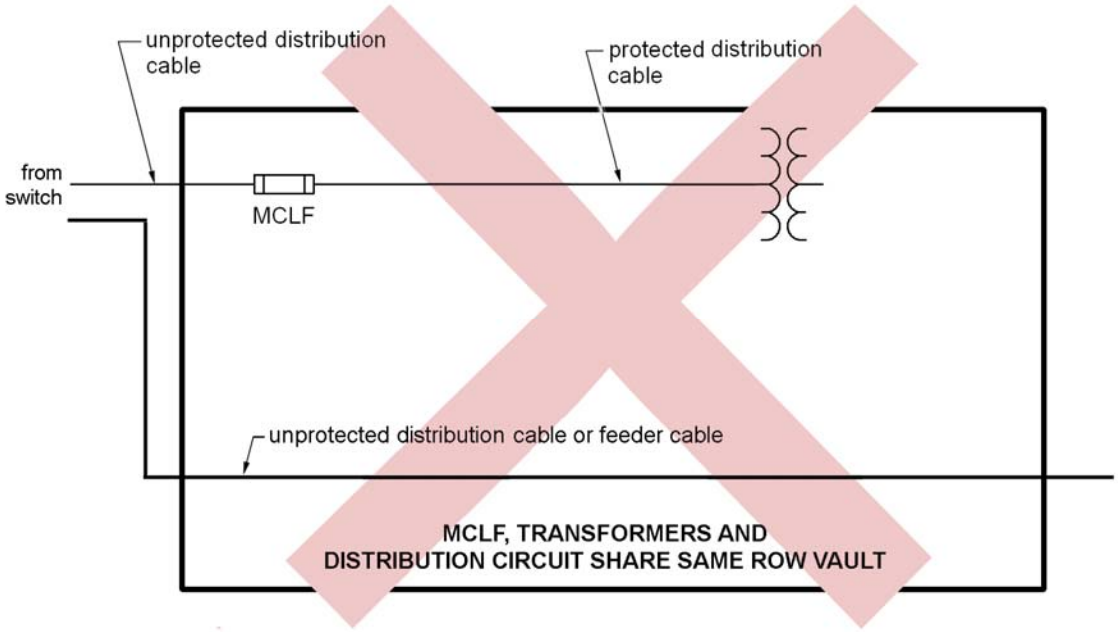

10.5 Case E: Splice In Through-Cable

Preferred Design, Case E

- Protected and unprotected circuits should not share a vault
- Within transformer vault, no exposure to energized unprotected cables or elbows
- De-energize MCLF vault at switch before entry to perform work

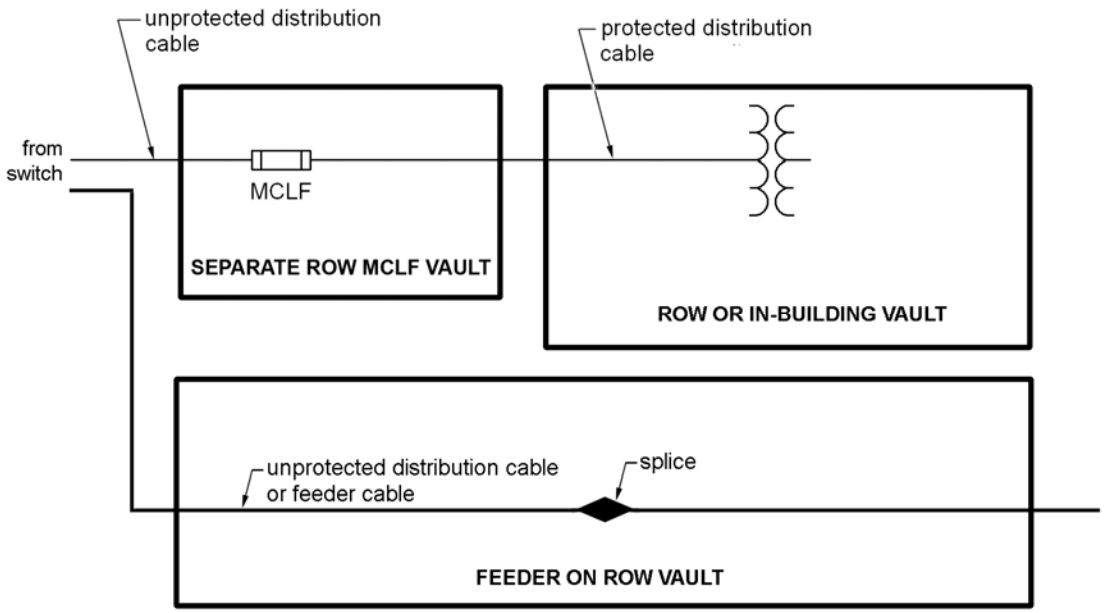

Not Acceptable Design, Case E

- Not acceptable, see Preferred Design, Case E; this Not Acceptable Design option shall not be engineered or constructed.
- Negative: Primary splices have explosive failures
- Negative: Multiple circuits in one vault means that all circuits need to be de-energized to work on one
- Negative: Personnel exposure to unprotected distribution cable and elbows. Either de-energize or obtain "Hold Open" when working in vault.
- Retrofit: Consider installation of protective barrier in existing SCL vaults

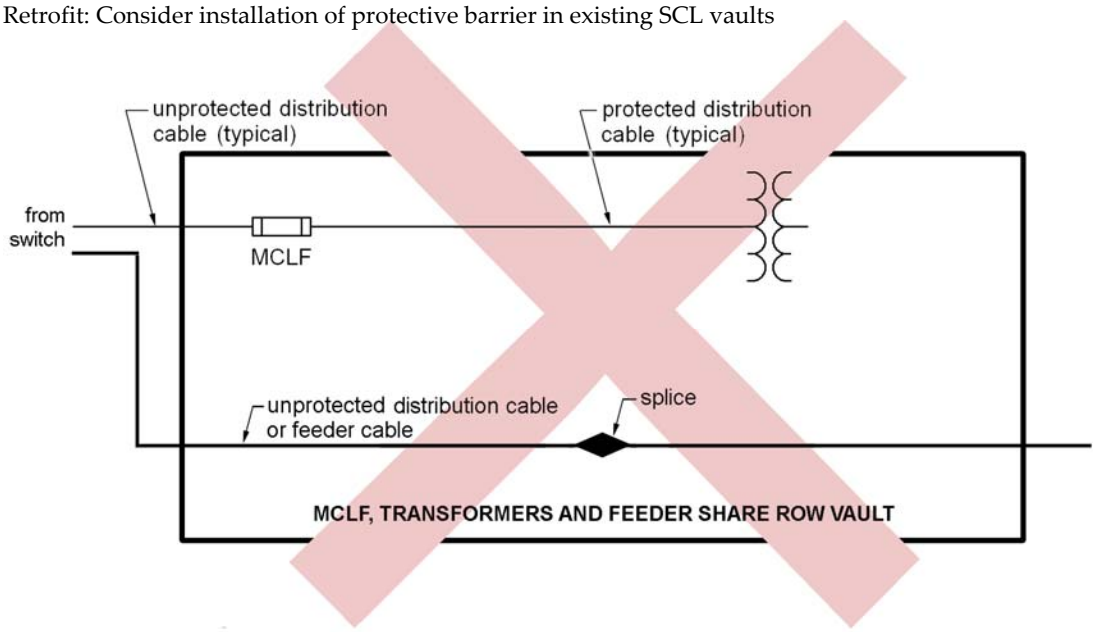

10.6 Case F: Complex Design with Vista Switch

Preferred Design, Case F

- Protected and unprotected circuits should not share a vault
- Within transformer vault, no exposure to energized unprotected cables or elbows
- De-energize MCLF vault at switch before entry to perform work

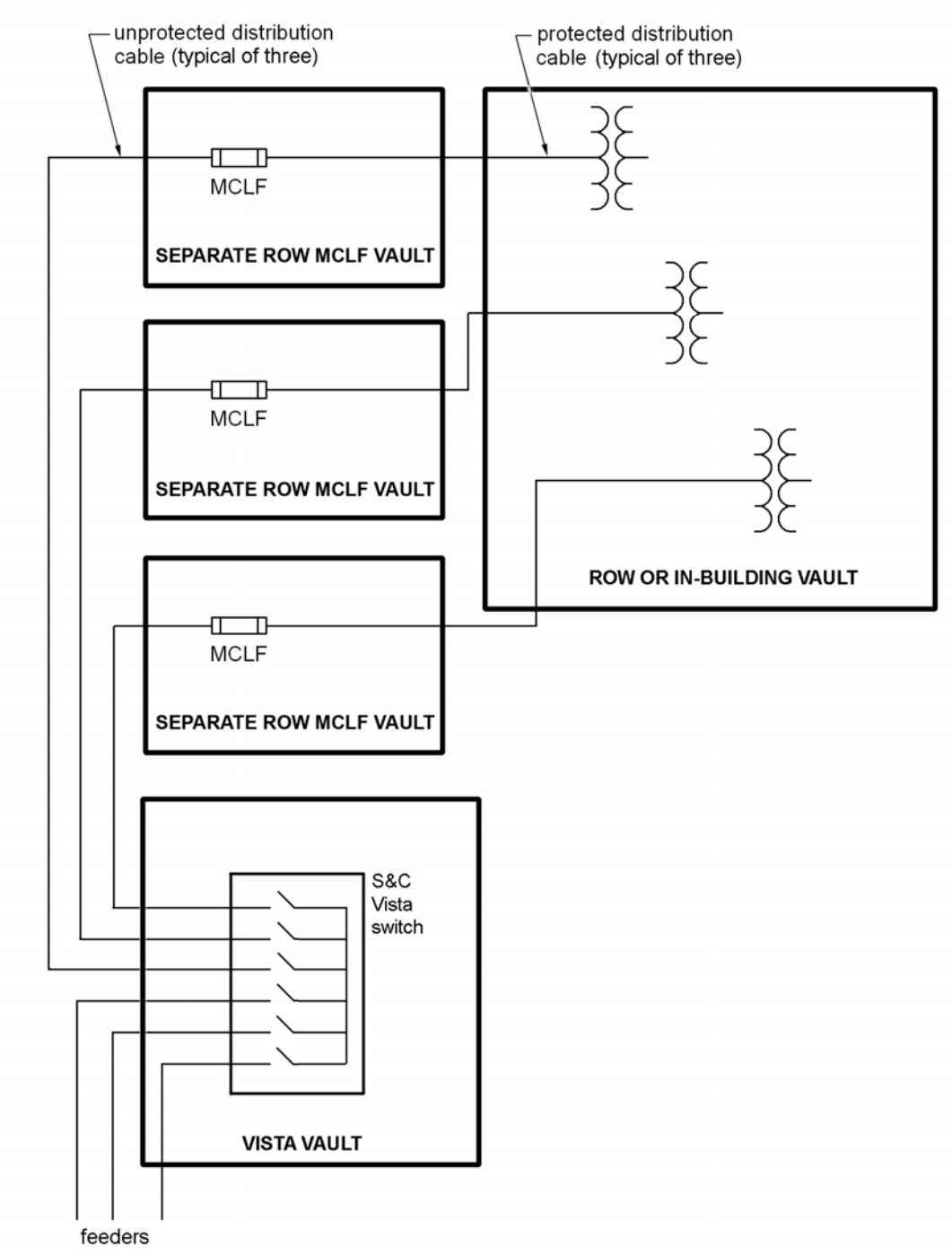

10.6 Case F: Complex Design with Vista Switch, continued

Not Acceptable Design, Case F

- Not acceptable, see Preferred Design, Case F; this Not Acceptable Design option shall not be engineered or constructed in the SCL system.
- Negative: Design maximizes personnel exposure to unprotected cable, elbows, and T-connectors
- Negative: Multiple circuits in one vault means that all circuits need to be de-energized to work on one
- Negative: Personnel exposure to unprotected distribution cable and elbows. Either de-energize or obtain "Hold Open" when working in vault.
- Retrofit: Consider installation of protective barrier in existing SCL vaults

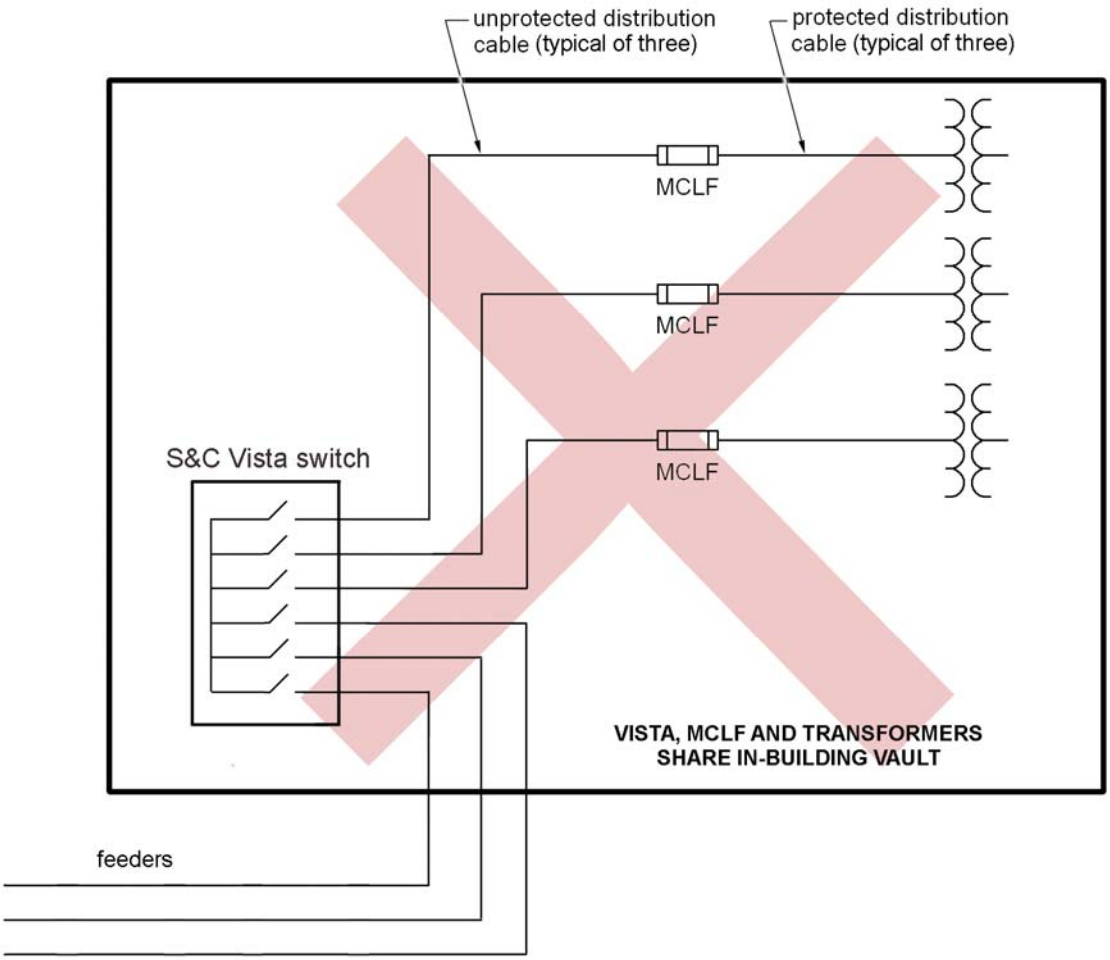

CABLE PULLING ENGINEERING FUNDAMENTALS

1. Table of Contents

Section	Page
1. Table of Contents	1
2. Scope	1
3. Definitions	2
4. Discussion	3
4.1 Compare Design to Allowable	3
4.2 Compare Sidewall Bearing Pressure	3
4.3 Compare Design and Working Tension	3
4.4 Compare Design and Actual Tension	3
4.5 Cable Pulling Software	6
5. Cable Pulling Devices	6
5.1 Pulling Grip	6
5.2 Pulling Eye	6
5.3 Pulling Iron	6
6. Cable and Conduit Characteristics	6
6.1 Percentage of Fill	6
6.2 Estimated Reel Back Tension	7
6.3 Jam Ratio	7
6.4 Cable Configuration	7
6.5 Cable Weight Correction Factor	8
7. Coefficient of Friction	8
8. Lubrication	9
9. Sidewall Bearing Pressure	9
10. Recommended Minimum Bending Radii	10
11. Maximum Pulling Tensions and Lengths	11
11.1 Maximum Tension	11
11.2 Maximum Pulling Length on Cable	11
11.3 Tensions Calculations	11
11.4 Commonly Used Approximation	12
11.5 Large Radius Bends and Low	13
11.6 Cable Creepage	13
12. Sample Pulling Calculations	14
13. End Notes	20
14. References	20
15. Appendix: Tables	21
15.1 Conduit ID	21
15.2 Cable OD and Weight	21
15.3 Sidewall Bearing Pressure	21
15.4 Conductor Area (*A*)	21
15.5 Cable Bending Radius	21

2. Scope

This design standard identifies the designing process for the application of cable pulling. This standard is applicable to cable pulling calculations with an existing or designed conduit system. Cable pulling tension is the primary structural calculation associated with installation of underground cable. The minimum number of pulling vaults required for a conduit system is determined by the maximum allowable pulling tension between vaults. This standard is not intended as a construction guideline for actual cable pulling, but an engineering tool for designing.

This standard is designed for pulling cables into a conduit system, and does not address issues related to cable pull-outs.

This standard is based on IEEE 576-2000 and includes input and information from other entities and manufacturers. Unless stated and referenced otherwise, all information is from IEEE.

Cable clearance calculations are excluded on the basis that the percentage of fill, as specified by the National Electrical Code (NEC), is sufficiently predictive of conduit fill problems.

Supports for vertical risers, non-armored and armored, are not included in this standard but appear in the preceding standard U1-4.11/NCI-60.

The following topics are outside the scope of this standard:

- Conduit system design;
- Cable pull-out;
- Control cables;
- Cable selection for system ratings;
- Installation of cable in cable trays;
- Racking and shaping of cable in vaults;
- Mandrel selection;
- Application of lubricants; and
- Conduit repair.

3. Definitions

Basket-type grip: See pulling grip.

Cable: A cable consists of the conductor, insulation, shielding and the jacket. Some include neutral wires.

Cable configurations:

- 1/C Single conductor with metallic shield
- 1/C+N Phase conductor with neutral, also known as a concentric neutral
- 3/C Three conductors under a single jacket
- 3-1/C Three single conductors twisted (triplexed)

Conductor: Portion of the cable that carries the current. Located at core of cable.

Coefficient of friction, Basic (k_O): A dimensionless factor of friction present between the cable jacket and the conduit.

Coefficient of friction, Effective (k): A function of the basic coefficient of friction and the weight correction factor.

Coefficient of friction, Static: At rest coefficient of friction of the cable in conduit.

Kellems grip: See pulling grip.

Neutral: The cable for return for the live feed. It should not be considered a cable or supply conductor.

Percentage of fill (*POF*): The percentage of the area inside the conduit taken up by the cable(s).

Pulley: See sheave.

Pulling eye: Compression or epoxy-filled devices attached to the conductor for pulling cable. Also referred to by manufacturers as pulling bolts.

Pulling bolt: See pulling eye.

Pulling grip: A pulling grip is woven, galvanized steel, mesh sleeve attached to a cable for cable pulling applications. Also known as pulling socks, basket-type or Kellems grips.

Pulling iron: The structural attachment point embedded in the walls, ceilings, and/or floors of concrete utility vaults for the purpose of pulling in new cable, pulling out old cable, or moving equipment. See Design Standard 9246.10 "Pulling Irons."

Pulling sock: See pulling grip.

Radians: A measure of angle. 2π radians = 360 degrees.

Sheave: A wheel or roller with a groove along its edge for holding a cable. Can also be known as pulley.

Sidewall Bearing Pressure (*SWBP*): The pressure exerted on an insulated cable as the result of the cable's being pulled around a bend during installation.

Supply conductor: A conductor intended to carry current.

Tension, actual: Tension experienced by the cable and can be measured in the field using a dynamometer on the pulling equipment during cable installation.

Tension, cable: Force exerted to draw or drag insulated electrical conductors.

Tension, cable – Section incoming (T_i): Amount of tension entering into a segment of conduit.

Tension, cable – Section outgoing (T_o): Amount of tension coming out of a segment of conduit.

Tension, design: Tension to pull specific cable into a new or existing conduit system. Function of conduit system, cable, and other components that affect the friction between the cable and conduit.

Tension, maximum allowable (T_{max}): Peak safe tension for the cable and pulling equipment. The lesser of the maximum allowable tension of the cable or the pulling device.

Tension, maximum working: Recommended tension for the system of cable pulling equipment, including pulling irons, the pulling tool, vault construction, ropes, cable pulling grips and eyes, and other associated equipment.

3. Definitions, continued

Tension, reel back: The estimated tension required to begin pulling the cable off of the cable reel.

Weight Correction Factor (W_C): A dimensionless factor (≥1) by which cable tensions and sidewall pressure are adjusted due to different cable arrangements, when cable is pulled around bends or in conduit.

4. Discussion

It is important to be conservative when calculating cable pulling tensions. The formulas and following examples only provide ideal situations which are uncommon for real-life practices. There will always be inconsistencies and factors present that are unseen. It is recommended to never design to the maximum limit obtained in each situation.

Conservative tension relates inversely with the cost of installation. Being too conservative can result in excess vault installation, high costs, while being too liberal can result in lower cost but possible cable failure and conduit damage. This task is the responsibility of the engineer.

The cable pulling design tension is a calculated figure that is a function of the conduit system, cable and other components that affect the friction between the cable and conduit. This figure is compared with the maximum allowable tension. If the pulling tension exceeds the allowable tension, then conditions should be changed to ensure a successful pull.

The sidewall bearing pressure calculation should be checked after each bend to make sure it does not exceed the cable's ratings.

When preparing for the pull, the design tension should be checked to make sure it does not exceed the maximum working tension.

While pulling, it is important that the actual tension not exceed the design tension.

4.1 Step A: Compare Design Tension to Maximum Allowable Tension, see Figure 4.1

If the design tension is within 10 percent of reaching the maximum allowable tension, the engineer should specify clearly the importance of utilizing lubrication during the pull. All additional conduit bends that might occur during the conduit installation should be approved by the engineer.

If the design tension exceeds the maximum allowable tension, a new cable can be selected that can withstand the required tension, considering it satisfies the cable and conduit requirements. Also, redesigning the conduit system with fewer bends and a downhill slope may help reduce the design tension.

The maximum allowable tension must be greater than the design tension

4.2 Step B: Compare Sidewall Bearing pressure to Maximum Cable Sidewall Bearing Pressure, see Figure 4.2

If the sidewall bearing pressure exceeds the maximum cable sidewall bearing pressure, increasing the conduit bend radius will help decrease the pressure experienced by the cable.

The maximum cable sidewall bearing pressure must be greater than the sidewall bearing pressure.

4.3 Step C: Compare Design Tension to Maximum Working Tension, see Figure 4.3

If the design tension exceeds the maximum working tension, select pulling equipments that have adequate ratings. If it is within 10 percent of reaching the maximum allowable tension, the engineer should specify clearly the importance of utilizing lubrication during the pull. All additional conduit bends that might occur during the conduit installation should be approved by the engineer.

The maximum working tension must be greater than the design tension.

4.4 Step D: Compare Design Tension to Actual Tension, see Figure 4.4

If the actual tension exceeds the design tension during the cable pull, continue pulling at the minimum possible force. Never stop pulling during a cable pull. This presents the conduit system with a new static coefficient of friction.

The engineer should be present to monitor and provide feedback as necessary during the cable pull.

The design tension must be greater than the actual tension.

4. Discussion, continued

Figure 4.1 Step A, Compare design tension to maximum allowable tension:
the maximum allowable tension must be greater

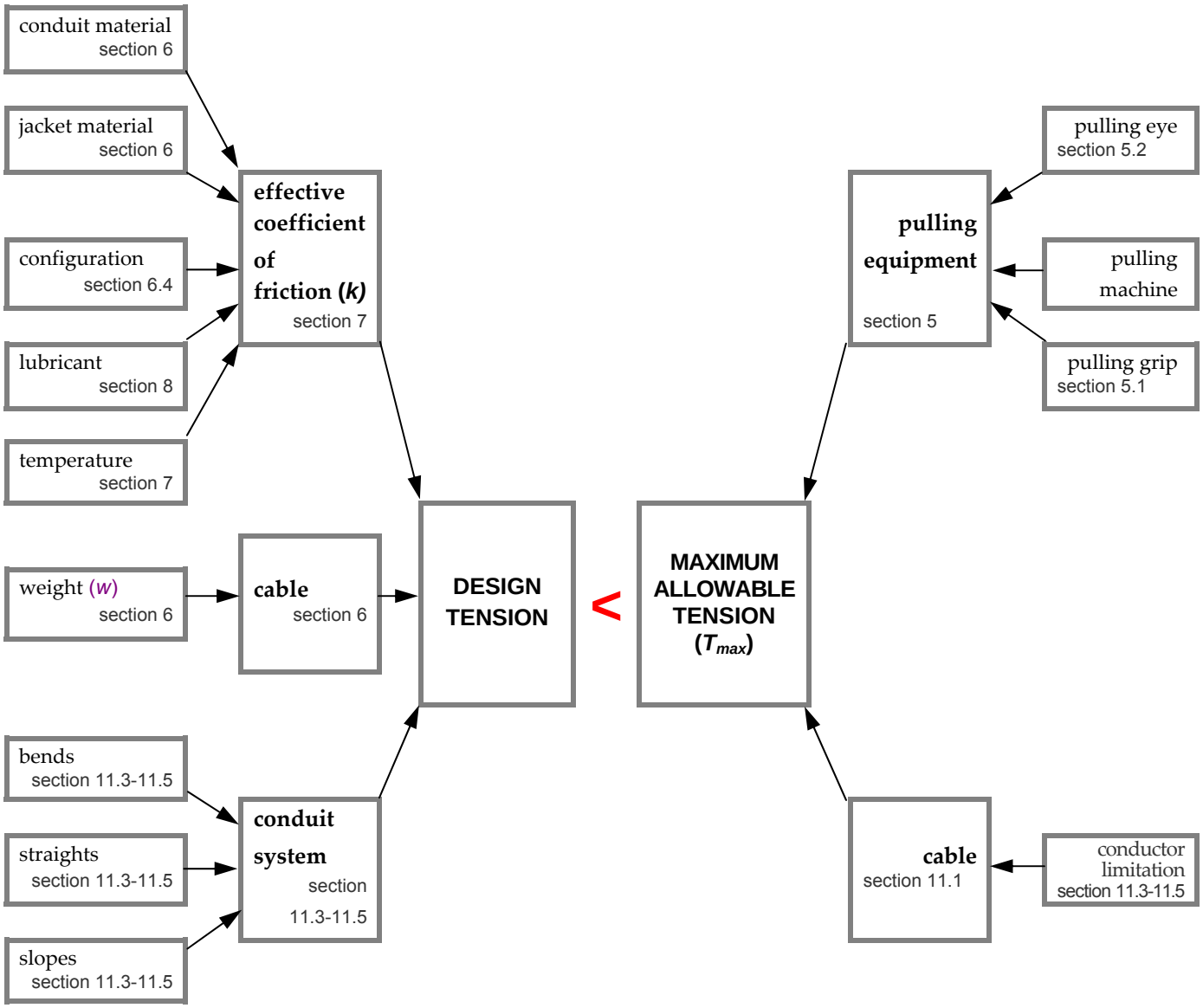

Figure 4.2 Step B, compare sidewall bearing pressure to maximum cable sidewall bearing pressure:
the maximum cable sidewall bearing pressure must be greater

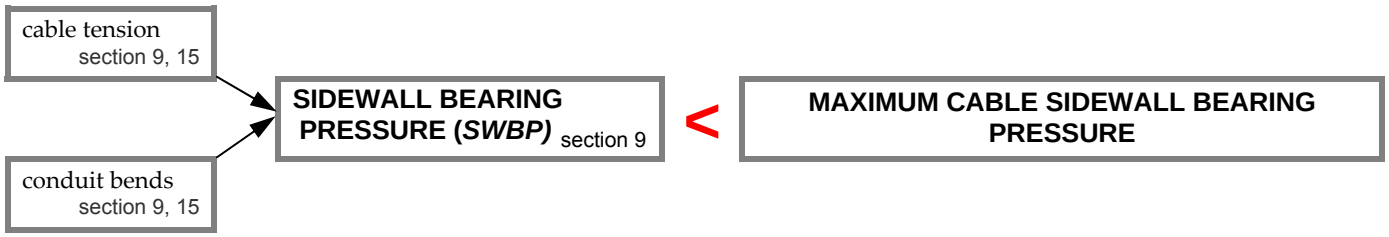

4. Discussion, continued

Figure 4.3 Step C, compare design tension to maximum working tension: ***the maximum working tension must be greater***

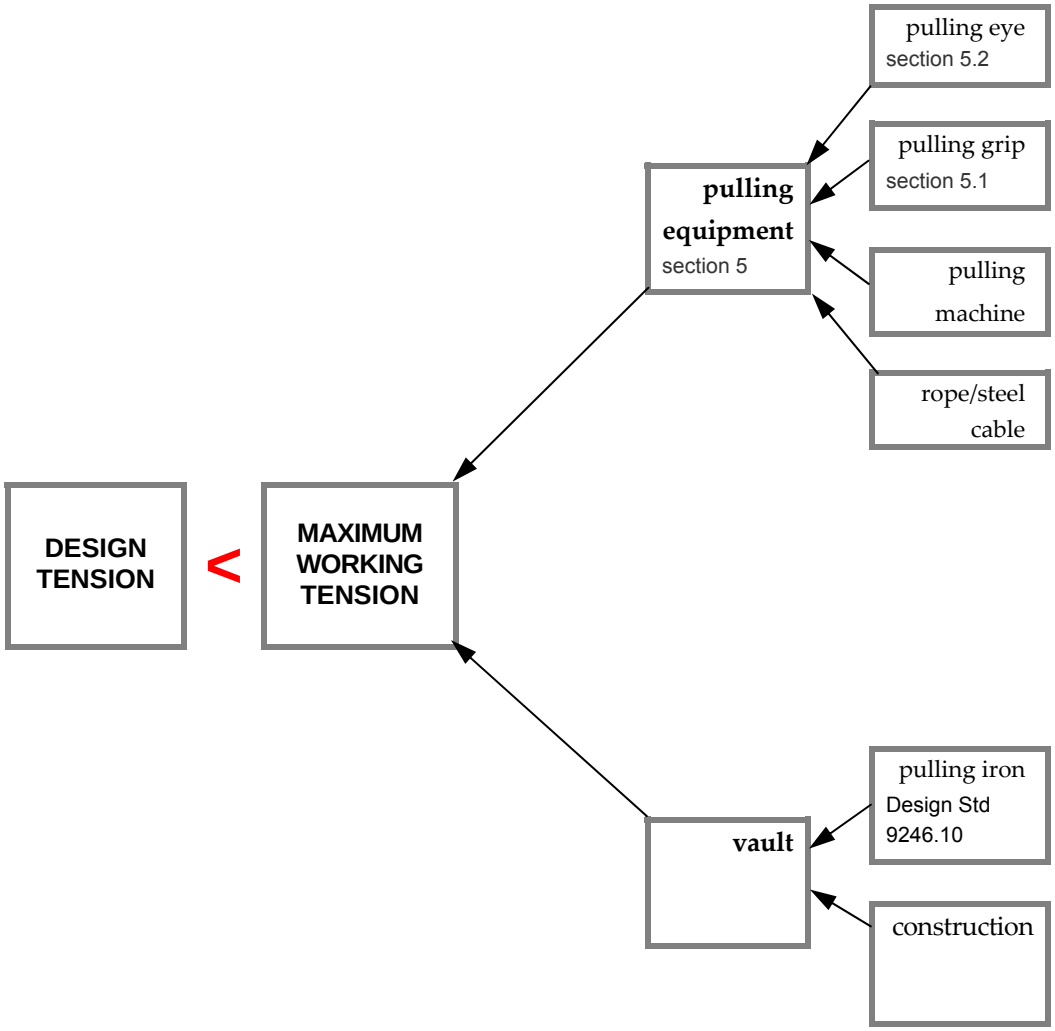

Figure 4.4 Step D, compare design tension to the actual tension: ***the design tension must be greater***

4. Discussion, continued

4.5 Cable Pulling Software

There are various software programs available that can be used to calculate the cable pulling tension of a conduit system. At SCL the following are available:

- ETAP
- Polywater Pull-Planner 2000
- CABLPUL230.xls, by Desmond Chan, SCL engineer

A Design Standard is being produced to provide a brief overview of the advantages and disadvantages of each program.

5. Cable Pulling Devices

The type of pulling device depends on the maximum tension the cables can handle. There are two choices for gripping the power cables: pulling eye or pulling grip.

5.1 Pulling Grip

Seattle City Light employed pulling grips are typically manufactured by Kellems and are made of high-strength galvanized steel strand. There are various cable diameters each grip can support. Pulling grips are applied over the cable jacket.

For pulling grips, the tension max is usually limited to 1,000 lbs. When doing pull calculations, it is wise to maintain a maximum pulling tension of below 1,000 lbs when a pulling grip is desired. Following the pull, the pulling grip can be removed and reused. It is recommended that three feet of cable on the pulling end be cut off to remove possibly damaged cable.

5.2 Pulling Eye

When using a pulling eye, do not exceed the allowable tension stated by the manufacturer of the pulling eye or SCL limits, depending on the type of vault, are 10,000, 5,000 or 1,250 lbs, whichever is less. Compared to pulling grips, pulling eyes are more compact and can ride through bends easier. Following the pull, the pulling eye can be removed and reused. It is recommended that all sections adversely impacted by the pulling eye during the pull be cut off to remove possibly damaged cable.

5.3 Pulling Iron

When using the vault pulling iron, it is crucial to stay within its maximum pulling tension. This limit is a function of the vault type and therefore varies for each vault type. See Design Standard 9246.10 "Pulling Irons."

6. Cable and Conduit Characteristics

There are typically two common scenarios where cable pulling tension is calculated. The first involves the design of a new conduit system, which includes the selection of the conduit and cable. The second involves pulling cable through an existing conduit system. In both cases, it is important that both conduit and cable meet specific requirements.

6.1 Percentage of Fill

The percentage of fill is a recommendation for designing conduit and cable systems outside the SCL standard pairings. A table of SCL recommended conduit and cable matching can be found in SCL Design Standard 9220.05 "Conduit Selection".

Figure 6.1, Configuration of three single conductors

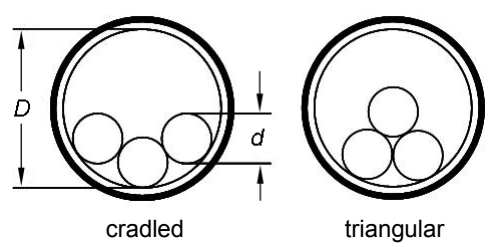

$$POF = \frac{n(d+c)^2}{(D)^2} x100 \qquad f6.1\ ^1$$

Where

POF	=	percentage of fill	percent
D	=	inside diameter of conduit	inches
d	=	outside diameter of cable	inches
c	=	outside diameter of neutral	inches
n	=	number of cables	-

6.1 Percentage of Fill, continued

Table 15.1 (see appendix, section 15) provides the inside diameter of commonly used conduits. Table 15.2 provides the outside diameter and weight of commonly used cables.

When finding *D*, inside diameter of conduit, be sure to distinguish between the two types, IPS and ID. IPS sizing refers to the outside diameter (*D*) of the conduit, and ID sizing refers to the inside diameter of the conduit.

The National Electrical Code requires that for three or more supply conductors in a conduit, the total cross-sectional area of the cables must not exceed 40% of the available area of the conduit. For one or two supply conductors in a conduit, the maximums are 53% and 31%, respectively. This fill limit is intended to prevent mechanical damage to cables during installation as well as overheating of cables in service.

6.2 Estimated Reel Back Tension

Estimated reel back tension is defined as the tension that is necessary to begin the unwinding process of the cable off of the drum reel. This value can be calculated as 10 times the weight per foot of the cable in pounds based on a "rule of thumb."

6.3 Jam Ratio

Jamming occurs in the cable system when three or more cables all become wedged side-by-side inside a conduit. This occurrence is predicted by the ratio of the inside diameter of the conduit to the outside diameter of the cable. If the jam ratio (*JR*) ratio is between 2.8 and 3.2, jamming is very likely. This would call for redesigning the system to produce a ratio that is out of this range.

At Seattle City Light, IEEE standard 576 will be used. The conduit diameter is increased by five percent to account for the deformation of the cables as they travel through conduit bends under tension. The following formula is used for three cables. Manufacturer triplexed cables, as well as single and two-cable pulls, should not jam with proper fill limits.

Design standard 9220.05 provides SCL approved cable and conduit pairings where practices have shown that jamming will not occur.

Figure 6.3, Cable jamming configuration

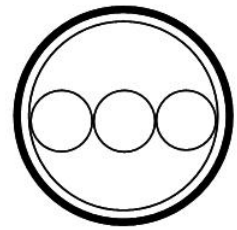

The following formula is only useful for jam ratios below 3.

$$JR = 1.05\frac{D}{d} \qquad f6.2$$ [3]

Where

D	=	inside diameter of conduit	inches
d	=	outside diameter of cable	inches

SCL recommends caution in designing a pull where the jam ratio is in the range of 2.8-3.2.[4]

Figure 6.3, Estimating risk with calculated jam ratios

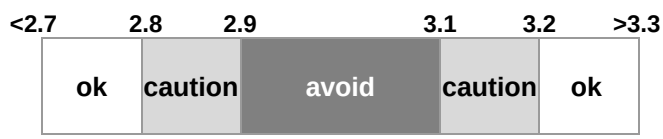

There are many other recommendations made by other professional standards as well. EPRI recommends the ratio to satisfy at least one of the following:

$$\frac{1.05D}{d} < 2.9 \text{ or } \frac{D}{1.03d} > 3.1. \qquad f6.3$$

Manufacturers such as Pirelli, Aetna Wire and Southwire use the following formula:

$$JR = \frac{D}{d} \qquad f6.4$$

Each different entity uses a different range of jam ratios.

6.4 Cable Configuration

With three or more conductors in a conduit, they will tend to assume triangular or cradled positions. Depending on which configuration,

6.4 Cable Configuration, continued

the weight correction factor will be slightly different. The jam ratio can be used to determine the cable configuration in the conduit. The triangular configuration requires less pulling tension than the cradled, and single configuration will require less than both for otherwise equal cable pulls. If the three-cable configuration is unknown, it is recommended to assume cradled as it provides a more conservative approach.

Note that the neutral cable is not considered a conductor for the calculations.

Table 6.4, Three-cable configuration from jam ratio [5]

Jam Ratio	Cable Configuration
< 2.625	triangular
> 2.625	cradled

Figure 6.4, Cable configurations

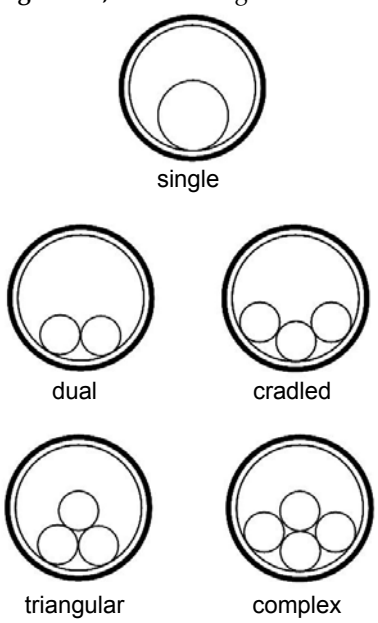

6.5 Cable Weight Correction Factor

The Weight Correction Factor (W_C) takes into account the weight distribution of single cables in a multiple cable pull. This factor depends on the positions of the cables in the conduit, affecting the normal force between the cable and conduit. When calculating the weight correction factor for a 3-1/C cable, assume the cables are in the triangular configuration.

1 cable (single)

$$W_C = 1 \qquad f6.6$$

3 cables (triangular), or 2 cables (dual)

$$W_C = \frac{1}{\sqrt{1-\left[\frac{d}{D-d}\right]^2}} \qquad f6.7$$

3 cables (cradled)

$$W_C = 1+\frac{4}{3}\left[\frac{d}{D-d}\right]^2 \qquad f6.8$$

4 or more cables (complex) [6]

$$W_C = 1+2\left[\frac{d}{D-d}\right]^2 \qquad f6.9$$

Where

W_C	=	weight correction factor	-
D =		inside diameter of conduit	inches
d	=	outside diameter of cable	inches

7. Coefficient of Friction

The effect of friction is very crucial to the cable pulling procedure. The effective coefficient of friction (k) varies directly with the area of cable surface that is in direct contact with the conduit during the pull. The basic coefficient of friction (k_o) is a function of the cable jacket and conduit materials. Because the surface contact of cable to conduit varies with cable configuration, the effective coefficient of friction can be calculated as a function of the basic coefficient of friction and the weight correction factor.

The use of lubricant significantly decreases the coefficient of friction. Thus, it is highly recommended to use lubrication during a long cable pull. See Material Standard 7262.2.

7. Coefficient of Friction, continued

$$k = k_O W_C \qquad f7$$

Where

k	=	*effective coefficient of friction*	-
k_O	=	*basic coefficient of friction*	-
W_C	=	*weight correction factor*	-

Table 7, Basic coefficient of friction with and without Polywater J lubricant (air temperature 70 degrees Fahrenheit) [7]

Conduit Material	Cable Outer Covering	One Cable in Conduit (k) Without Lubricant	With Lubricant
PVC	LLDPE	0.28	0.12
	XLPE	no data	no data
	PE	0.25	0.11
	PVC	0.55	0.11
	PP	no data	no data
	bare CN	no data	no data
fiberglass	LLDPE	0.23	0.13
	XLPE	no data	no data
	PE	0.13	no data
	PVC	0.33	0.16
	PP	0.31	0.13
	bare CN	0.16	no data
steel	LLDPE	0.30	0.18
	XLPE	no data	no data
	PE	0.25	no data
	PVC	0.43	0.13
	PP	0.43	0.06
	bare CN	0.35	no data

Outer Covering Codes:

Bare CN, concentric neutral with copper wires
LLDPE, linear low-density polyethylene
PE, polyethylene
PP, polypropylene
PVC, polyvinyl chloride
XLPE, crosslinked (XL) polyethylene

8. Lubrication

The use of lubrication is essential to reduce friction during a cable pull. The compatibility of the lubrication with the cable and conduit is very crucial. Check manufacturer's recommendation before using any lubrication. Polywater J is an SCL approved lubricant that comes in gel or pourable gel. Lubrication should be poured before and/or during the pull.

The formula below represents an estimated quantity of lubricant needed for a cable pull.

$$Q = (0.0015)LD \qquad f8$$ [8]

Where

Q	=	quantity of lubrication	gallons
L	=	length of conduit	feet
D	=	inside diameter of conduit	inches

9. Sidewall Bearing Pressure

9.1 Preventing Cable Damage

Excessive sidewall bearing pressure (SWBP) on a cable can damage the insulation, causing a higher chance for cable failure.

Figure 9, Sidewall bearing pressure factors

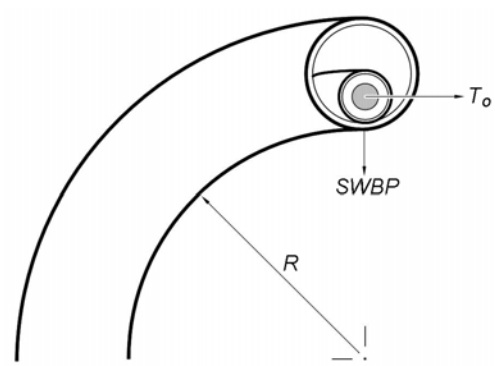

The *SWBP* is expressed as a form of the tension out of the bend divided by the inside radius of the bend, with different factors for the different configurations.

9. Sidewall Bearing Pressure, continued

9.1 Preventing Cable Damage, continued

1 cable (single)

$$SWBP = \frac{T_o}{r} \qquad f9.1$$

3 cables (triangular), or 2 cables (dual)

$$SWBP = \left[\frac{W_C}{2}\right]\frac{T_o}{r} \qquad f9.2$$

3 cables (cradled)

$$SWBP = \left[\frac{3W_C - 2}{3}\right]\frac{T_o}{r} \qquad f9.3$$

Where

$SWBP$	=	sidewall bearing pressure	pounds/ (foot of bend radius)
W_C	=	weight correction factor	-
T_o	=	tension entering the bend	pounds
r	=	inside radius of conduit	feet

In order to minimize cable damage due to excessive sidewall pressure, compare calculated values with the maximum sidewall pressure table, as well as checking the cable manufacturer's recommendation for each type of cable to be installed. The *SWBP* can be lowered by reducing the pulling tension or increasing the bend radius.

Table 15.3 (see appendix, section 16) shows maximum sidewall bearing pressures of commonly used cables.

9.2 Friction and High SWBP

In a study conducted by EPRI, and confirmed by IEEE 576-2000, the basic coefficient of friction around a bend can be reduced when the *SWBP* is greater than 150 lbs/ft.

Table 9.2. Recommended basic coefficient of friction of bends with *SWBP* of 150 lbs/ft or greater with lubricant

Conduit Material	Cable Outer Covering	Basic Coefficient of Friction, k_O
PVC	LLDPE	0.15
	XLPE	no data
	PE	0.15
	PVC	0.30
	PP	no data
	bare CN	no data
fiberglass	LLDPE	no data
	XLPE	no data
	PE	no data
	PVC	no data
	PP	no data
	bare CN	no data
steel	LLDPE	0.25
	XLPE	no data
	PE	0.25
	PVC	0.30
	PP	no data
	bare CN	no data

10. Recommended Minimum Bending Radii [9]

When training or installing cable, it is very important to not violate the minimum bending radius values cited in Table 10. Bending cable beyond acceptable limits can damage the cable's internal structure and lead to dielectric breakdown.

Minimum bending radius values for 600 volt cable are notably lower than primary cable because 600 volt cable has a much simpler internal structure and significantly lower electric field stresses.

Minimum bending radius values are a function of a cable's metallic shielding type, construction type, insulation thickness, and overall diameter.

10. Recommended Minimum Bending Radii, continued

Table 10, Minimum bending radius values, copper conductor cable [10]

Grip Type	Cable Voltage Rating, kV	Con-struction	Size, AWG/kcmil	Minimum Bending Radius, in
tape	5	1/C	all	14
	15	1/C	500	18
		3/C	4/0 and less	29
			350-500	35
			750	42
	28	3/C+3G	#1	32
			350	40
	35	1/C	350	21
			1000	30
flat strap	15	3-1/C	500	47
			1000	61
	28	1/C	350-500	21
			750-1000	26
drain wire	28	1/C	350-500	21
	28-35	1/C	750-1000	25

The values presented in Table 10 are Seattle City Light's best practice and absolute minimums - it is highly recommended to not even approach these values in the field.

The values presented in Table 10 do not apply to bends around which the cable may be pulled under tension as this number will be determined by the maximum allowable sidewall bearing pressure.

11. Maximum Pulling Tensions and Lengths

11.1 Maximum Tension on Cable Conductors

Each specific type of conductor, copper or aluminum, has a maximum pulling tension that cannot be exceeded. The conductors of the cable are generally the only members that can bear the pulling forces without damage. ***This formula can only be used when pulling on the conductor portion of the cable using a pulling eye.***

Copper conductors

$$T_{MAX} = n \times S \times A \qquad f11.1$$

Aluminum conductors

$$T_{MAX} = n \times S \times A \qquad f11.2$$

Where

T_{MAX} =	maximum allowable tension	pounds
A =	conductor area	cmil
S =	maximum allowable conductor stress	lb/cmil
n =	number of conductors	-

Table 11.1, Maximum allowable conductor stress (S) [11]

Cable Type	Material	Temper	lb/cmil
all	copper	soft	0.008
stranded	aluminum	hard	0.008
stranded	aluminum	3/4 hard	0.006
stranded	aluminum	1/2 hard	0.004
solid	aluminum	soft	0.002

Table 15.4 (appendix) provides conductor area.

For a single conductor, IEEE recommends a maximum limitation of 5,000 pounds, and 10,000 pounds for three cables. The limitation is due to unequal distribution of tension forces when pulling multiple conductors. In three cable pulls (non-triplexed cables), the tension should be computed using the assumption that only two conductors will share the fully applied tension.

See Construction Guideline E6-1.0/NGE-70 for cable material and temper.

11.2 Maximum Pulling Length on Cable

Each specific type of conductor has a maximum pulling length that cannot be exceeded, depending on the weight, length and friction of the cable.

$$L_{MAX} = \frac{T_{MAX}}{k \times w} \qquad f11.3$$

Where

L_{MAX} =	maximum permissible pulling length	feet
T_{MAX} =	maximum allowable tension	pounds
k =	effective coefficient of friction	-
w =	total weight of cables in conduit	pounds/foot

Cable pulls should never be designed to exceed the maximum pulling tension as the actual condition of the system is variable. Designs must also take into account tension limitations of other hardware required for the pull, i.e. pulling device attachments, pulling irons, etc.

11.3 Tension Calculations and Specific Formulas [12]

When preparing for the pull, it is best to map out the different sections in the conduit system in order to anticipate straights, bends, rises, inclines and declines. Minimizing the complexity of bends will simplify tension calculations as well as lessen pulling tensions. Generally, it is best to pull downhill and feed the end closest to any bends.

It is wise to calculate the pulling tensions from pulling in both directions.

The following specific formulas are provided as an understanding to where the bend approximation formula is derived from.

T_o =	section outgoing cable tension	pounds
T_i =	section incoming cable tension	pounds
θ =	angle of bend	radians
L =	actual length of cable in section	feet
w =	total weight of cables in conduit	pounds/foot
k =	effective coefficient of friction	-
r =	inside radius of conduit	feet

Straight pull

Horizontal $T_o = T_i + Lwk$ *f11.4*

Straight up $T_o = T_i + Lw$ *f11.5*

Straight down $T_o = T_i - Lwk$ *f11.6*

Sloped pull

Upwards $T_o = T_i + LW[\sin(\theta) + k\cos(\theta)]$ *f11.7*

Down $T_o = T_i - LW[\sin(\theta) - k\cos(\theta)]$ *f11.8*

Horizontal bend pull

$$T_o = T_i \cosh(k\theta) + \sqrt{T_i^2 + (wr)^2}\sinh(k\theta) \qquad f11.9$$

Concave down

Upwards $T_o =$

$$T_i e^{k\theta} + \frac{wr}{1+k^2}[2ke^{k\theta}\sin(\theta) + (1-k^2)(1-e^{k\theta}\cos(\theta)] \qquad f11.10$$

Downwards $T_o =$

$$T_i e^{k\theta} + \frac{wr}{1+k^2}[2k\sin(\theta) - (1-k^2)(1-e^{k\theta}\cos(\theta)] \qquad f11.11$$

Concave up

Upwards $T_o =$

$$T_i e^{k\theta} - \frac{wr}{1+k^2}[2k\sin(\theta) - (1-k^2)(e^{k\theta} - \cos(\theta)] \qquad f11.12$$

Downwards $T_o =$

$$T_i e^{k\theta} - \frac{wr}{1+k^2}[2ke^{k\theta}\sin(\theta) + (1-k^2)(1-e^{k\theta}\cos(\theta)] \qquad f11.13$$

Figure 11.3, Cable pulling sections

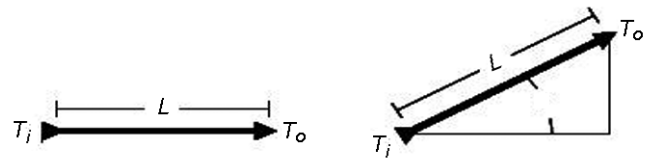

straight (*f11.4*) slope upward (*f11.7*)

11.3 Tensions Calculations and Specific Formulas, continued

Figure 11.3, Cable pulling sections, continued

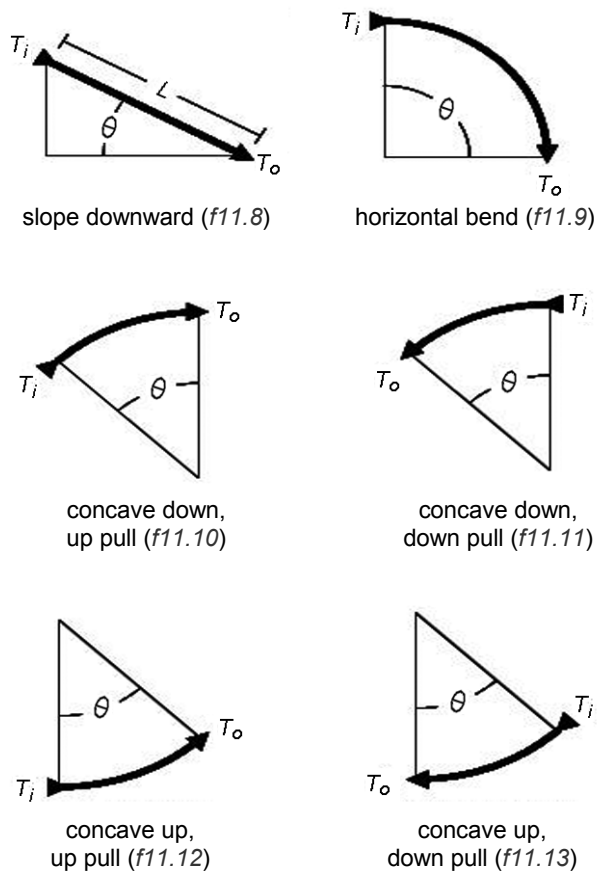

11.4 Commonly Used Approximation for Bends

Generally, since the above specific formulas are very complicated, it is common practice to use the following approximation in lieu of the exact bend equations *f11.9, f11.10, f11.11, f11.12, and f11.13.*

$$T_o = T_i e^{k\theta} \qquad f11.14$$

Table 11.4, Degrees to radians conversion table

Bend Angle in Degrees	Bend Angle in Radians
15	0.262
30	0.524
45	0.785
60	1.040
75	1.310
90	1.570

11.5 Large Radius Bends and Low Incoming Tension

Large radius bends and low incoming tensions have been calculated to be inconsistent when using the approximation formula for bends. The bend approximation is only a factor of the incoming tension and does not directly account for the extra friction generated when pulling through large arcs.

The following table suggests situations for using the straight formula in lieu of the bend approximation. With these characteristics for the bend, straight pull calculations yield higher pulling tensions than bend approximation calculations. These numbers were obtained through a comparison calculation between the two formulas. Friction and cable weight were held constant with a varying radius and incoming tension.

Table 11.5, Conditions to use straight formula instead of bend approximation

Crossover Angle, degrees	Crossover, lbs/ft
≤ 22.5	≤ 4.79
≤ 45	≤ 4.41
≤ 90	≤ 3.72

If the SWBP at the indicated crossover angles is than the listed crossover SWBP, use the straight pull calculations. Otherwise, use the bend approximation calculations.

11.6 Cable Creepage

Cable creepage occurs when there is not enough cable weight to offset the movement of cable being pulled downwards by gravity. In such cases, it is recommended to use a single or double-eye split grip to restrain the cable by putting it in compression. From SCL history, cable creepage often occurs when a terminal pole and vault are in close proximity within a cable system. Construction Guideline U4-3.5/ NCI-130 provides details to this application.

12. Sample Pulling Calculations

To better familiarize the user with the preceding technical parameters and formulas, the following pages illustrate calculations for a sample installation of a cable into an existing conduit system.

12. Sample Pulling Calculations, continued

For comparison purposes in the sample calculations, tensions calculated with the approximated formula for bends (formula *f11.14*) are included on the right in bold italics and parentheses.

12.1 Sample Materials:

012100	cable	28 kV, 500 kcmil, 3-1/C
012808	conduit	5 inch fiberglass
726225	lubricant	Polywater J

12.2 Sample Cable-Pull Information:

1.	type of pull	three single cable conductors
2.	cable description	Stock No.: 012100 28 kV, 500 kcmil, 1/C TRXLP insulation LLDPE jacket
3.	typical outer diameter of one cable (*D*)	1.62 in
4.	weight of three cables (*W*)	7.5 lbs/ft
5.	maximum sidewall pressure	1,500 lbs/ft
6.	conductor area (*A*)	500,000 cmil
7.	allowable conductor stress (*S*)	0.008 lbs/cmil
8.	conductor alloy	copper
9.	conductor temper	soft
10.	shielding	flat strap
11.	conduit used	Stock No.: 012808 5 inch fiberglass
12.	typical inner diameter of conduit (*D*)	5.38 in
13.	type of lubricant	Polywater J
14.	installation temperature	70° F
15.	estimated reel back tension	25 lbs
16.	pulling device	pulling eye

12.3 Sample Pull: Plan and Profile Views

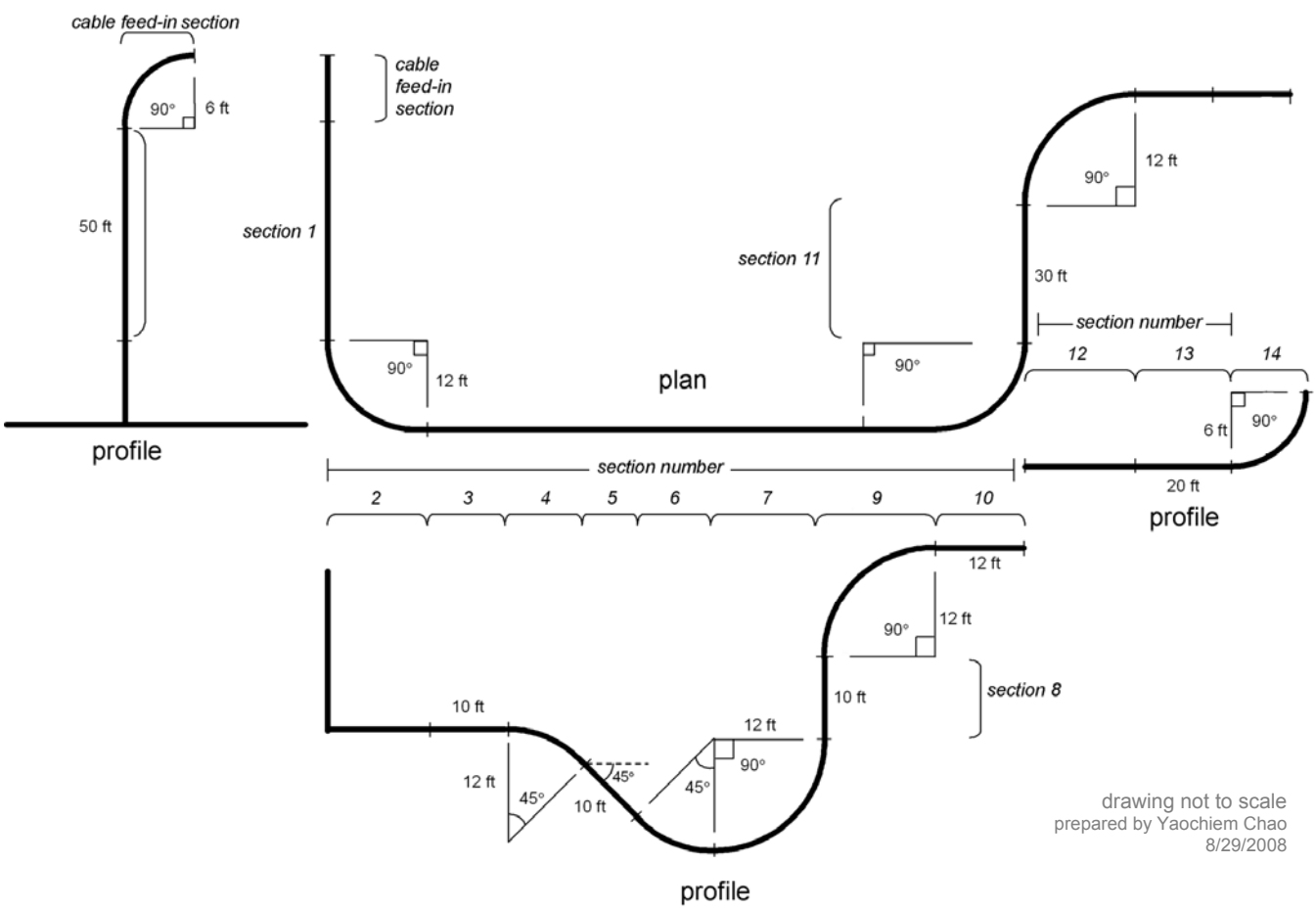

drawing not to scale
prepared by Yaochiem Chao
8/29/2008

12.4 Calculation Steps

The first step is to ensure that the cable and conduit characteristics meet all necessary requirements and applicable codes and standards.

Percentage of fill:

$$POF = \frac{n(d)^2}{(D)^2} x100$$

$$= \frac{3(1.62)^2}{(5.38)^2} x100$$

= **27.2 % fill**
less than 40%, meets NEC requirements

Jam ratio:

$$JR = 1.05\frac{D}{d}$$

$$= 1.05\frac{5.38}{1.62}$$

= **3.49**
already an approved SCL conduit/cable pairing
outside jam ratio range of 2.8-3.2

Weight correction factor:

Cables are in the triangle configuration.

$$W_c = 1+\frac{4}{3}\left[\frac{d}{D-d}\right]^2$$

$$= 1+\frac{4}{3}\left[\frac{1.62}{5.38-1.62}\right]^2$$

= **1.25**

Friction:

From the table, using a cable Stock Number 012100 with LLDPE jacket in a PVC conduit with Polywater J lubricant, the basic coefficient of friction is 0.13. To design conservatively, plan for the worst-case scenario. Therefore, choose the coefficient of friction for a cable pull without friction, thus making the applied coefficient of friction 0.23**.** Depending on the preferences of different engineers, this number can be increased or decreased. Because the cables are assembled in the triangular configuration, the weight correction factor that must be applied.

Effective friction:

$$k = k_O W_C$$

$$= 0.23 \times 1.25$$

= **0.29**

The second step is to establish a maximum allowable tension using the lowest tension rating from the pulling machine, pulling device or cable conductor limitation.

12. Sample Pulling Calculations

12.4 Calculation Steps, continued

Maximum tension on copper cable conductor:

$$T_{max} = n \times S \times A$$
$$= 3 \times 0.008 \times 500{,}000$$
$$= 12{,}000 \text{ lbs}$$

Pulling eye tension limit:

= **10,000 lbs**
maximum allowable tension

Results in bold are calculated using traditional formulas.

Results in bold italics are calculated using the approximation formula (f11.14). Straight pulls were substituted for slope pulls. Sidewall bearing pressure calculations are the same.

Cable Feed-in Step – Concave up, downward pull

T_i = *75 lbs – estimated reel back tension*

$$T_o = T_i e^{k\theta} - \frac{wr}{1+k^2}[2ke^{k\theta}\sin(\theta) + (1-k^2)(1-e^{k\theta}\cos(\theta)]$$
$$= 75e^{.29\times1.57} - \frac{7.5\times6}{1+.29^2}[2(.29)e^{.29\times1.57}\sin(1.57) + (1-.29^2)(1-e^{.29\times1.57}\cos(1.57))]$$

= **42.4 lbs** ***(118.3 lbs)***

$$SWBP = \left[\frac{W_C}{2}\right]\frac{T_o}{r}$$
$$= \left[\frac{1.25}{2}\right]\frac{42.4}{6}$$

= **4.4 lbs/ft** does not exceed max sidewall bearing pressure ***(12.3 lbs/ft)***

Step 1 – Horizontal straight pull

$$T_o = T_i + Lwk$$
$$= 42.4 + 50 \times 7.5 \times .29$$

= **151.2 lbs** ***(227.1 lbs)***

Step 2 – Horizontal bend pull

$$T_o = T_i\cosh(k\theta) + \sqrt{T_i^2 + (wr)^2}\sinh(k\theta)$$
$$= 151.2\cosh(.29\times1.57) + \sqrt{151.2^2 + (7.5\times12)^2}\sinh(.29\times1.57)$$

= **250.1 lbs** ***(358.1 lbs)***

$$SWBP = \left[\frac{W_C}{2}\right]\frac{T_o}{r}$$
$$= \left[\frac{1.25}{2}\right]\frac{250.1}{12}$$

= **13 lbs/ft** does not exceed max sidewall bearing pressure ***(18.7 lbs/ft)***

12. Sample Pulling Calculations

12.4 Calculation Steps, continued

Step 3 – Straight pull

$$T_o = T_i + Lwk$$
$$= 250.1 + 10 \times 7.5 \times .29$$
$$= \mathbf{271.9\ lbs}$$ ***(379.9 lbs)***

Step 4 – Concave down, downward pull

$$T_o = T_i e^{k\theta} + \frac{wr}{1+k^2}[2k\sin(\theta) - (1-k^2)(1-e^{k\theta}\cos(\theta)]$$
$$= 271.9e^{.29\times.785} + \frac{7.5\times 12}{1+.29^2}[2(.29)\sin(.785) - (1-.29^2)(1-e^{.29\times.785}\cos(.785)]$$
$$= \mathbf{367.0\ lbs}$$ ***(477.1 lbs)***

$$SWBP = \left[\frac{W_C}{2}\right]\frac{T_o}{r}$$
$$= \left[\frac{1.25}{2}\right]\frac{367}{12}$$
$$= \mathbf{19.1\ lbs/ft}$$ does not exceed max sidewall bearing pressure (***24.8 lbs/ft)***

Step 5 – Slope downward pull

$$T_o = T_i - LW[\sin(\theta) - k\cos(\theta)]$$
$$= 367 - (10)(7.5)[\sin(.785) - .29\cos(.785)]$$
$$= \mathbf{329.4\ lbs}$$ ***(498.9 lbs)***

Step 6 – Concave bend, downward pull

$$T_o = T_i e^{k\theta} - \frac{wr}{1+k^2}[2ke^{k\theta}\sin(\theta) + (1-k^2)(1-e^{k\theta}\cos(\theta)]$$
$$= 329.4e^{.29\times.785} - \frac{7.5\times 12}{1+.29^2}[2(.29)e^{.29\times.785}\sin(.785) + (1-.29^2)(1-e^{.29\times.785}\cos(.785)]$$
$$= \mathbf{362.4\ lbs}$$ ***(626.5 lbs)***

$$SWBP = \left[\frac{W_C}{2}\right]\frac{T_o}{r}$$
$$= \left[\frac{1.25}{2}\right]\frac{362.4}{12}$$
$$= \mathbf{18.9\ lbs/ft}$$ does not exceed max sidewall bearing pressure (***32.6 lbs/ft)***

12. Sample Pulling Calculations

12.4 Calculation Steps, continued

Step 7 – Concave bend, upward pull

$$T_o = T_i e^{k\theta} - \frac{wr}{1+k^2}[2k\sin(\theta) - (1-k^2)(e^{k\theta} - \cos(\theta)]$$

$$= 362.4e^{.29\times1.57} - \frac{7.5\times12}{1+.29^2}\left[2(.29)\sin(1.57) - (1-.29^2)(e^{.29\times1.57} - \cos(1.57)\right]$$

= **643.1 lbs** ***(987.8 lbs)***

$$SWBP = \left[\frac{W_C}{2}\right]\frac{T_o}{r}$$

$$= \left[\frac{1.25}{2}\right]\frac{643.1}{12}$$

= **33.5 lbs/ft** does not exceed max sidewall bearing pressure (***51.4 lbs/ft)***

Step 8 – Vertical upward pull

$$T_o = T_i + Lw$$

$$= 643.1 + 10(7.5)$$

= **781.1 lbs** ***(1062.8 lbs)***

Step 9 – Convex bend, upward pull

$$T_o = T_i e^{k\theta} + \frac{wr}{1+k^2}[2ke^{k\theta}\sin(\theta) + (1-k^2)(1-e^{k\theta}\cos(\theta)]$$

$$= 781.1e^{.29\times1.57} + \frac{7.5\times12}{1+.29^2}[2(.29)e^{.29\times1.57}\sin(1.57) + (1-.29^2)(1-e^{.29\times1.57}\cos(1.57)]$$

= **1383.3 lbs** ***(1675.7 lbs)***

$$SWBP = \left[\frac{W_C}{2}\right]\frac{T_o}{r}$$

$$= \left[\frac{1.25}{2}\right]\frac{1383.3}{12}$$

= **72 lbs/ft** does not exceed max sidewall bearing pressure (***87.3 lbs/ft)***

Step 10 – Horizontal bend pull

$$T_o = T_i\cosh(k\theta) + \sqrt{T_i^2 + (wr)^2}\sinh(k\theta)$$

$$= 1383.3\cosh(.29\times1.57) + \sqrt{1383.3^2 + (7.5\times12)^2}\sinh(.29\times1.57)$$

= **2182.4 lbs** ***(2642.0 lbs)***

$$SWBP = \left[\frac{W_C}{2}\right]\frac{T_o}{r}$$

$$= \left[\frac{1.25}{2}\right]\frac{2182.4}{12}$$

= **113.7 lbs/ft** does not exceed max sidewall bearing pressure (***137.6 lbs/ft)***

12. Sample Pulling Calculations

12.4 Calculation Steps, continued

Step 11 – Straight pull

$$T_o = T_i + Lwk$$
$$= 2182.4 + 30 \times 7.5 \times .29$$
$$= \mathbf{2247.7\ lbs}$$

(2707.3 lbs)

Step 12 – Horizontal bend pull

$$T_o = T_i \cosh(k\theta) + \sqrt{T_i^2 + (wr)^2}\,\sinh(k\theta)$$
$$= 2247.7\cosh(.29 \times 1.57) + \sqrt{2247.7 + (7.5 \times 12)^2}\,\sinh(.29 \times 1.57)$$
$$= \mathbf{2532.8\ lbs}$$

(4268.5 lbs)

$$SWBP = \left[\frac{W_C}{2}\right]\frac{T_o}{r}$$
$$= \left[\frac{1.25}{2}\right]\frac{2532.8}{12}$$
$$= \mathbf{131.9\ lbs/ft}$$

does not exceed max sidewall bearing pressure (***222.3 lbs/ft)***

Step 13 – Straight pull

$$T_o = T_i + Lwk$$
$$= 2532.7 + 20 \times 7.5 \times .29$$
$$= \mathbf{2576.2\ lbs}$$

(4312 lbs)

Step 14 – Concave bend, upward pull

$$T_o = T_i e^{k\theta} - \frac{wr}{1+k^2}[2k\sin(\theta) - (1-k^2)(e^{k\theta} - \cos(\theta)]$$
$$= 2576.2e^{.29\times1.57} - \frac{7.5\times12}{1+.29^2}\left[2(.29)\sin(1.57) - (1-.29^2)(e^{.29\times1.57} - \cos(1.57))\right]$$
$$= \mathbf{4133.5\ lbs}$$

(6798.5 lbs)

$$SWBP = \left[\frac{W_C}{2}\right]\frac{T_o}{r}$$
$$= \left[\frac{1.25}{2}\right]\frac{4133.5}{6}$$
$$= \mathbf{430.57\ lbs/ft}$$

does not exceed max sidewall bearing pressure (***354.1 lbs/ft)***

The maximum sidewall bearing pressure is not exceeded and the final pulling tension requirement for this cable run is approximately 1,350 pounds for the more exact calculations, and about 2,300 pounds for the approximate calculations. Since it exceeds 1,000 pounds but within 10,000 pounds, a pulling grip cannot be used, so a pulling eye must be employed.

In addition, reverse calculation pulls can also be calculated as it may yield a lower required pulling tension. Typically, it is best to pull downhill and to begin pulling closest to the first bend.

13. End Notes

[1] IEEE 576-2000. manipulated to include the fill percentage of the neutral cable

[2] 2008 NEC. Chapter 9, Table 1

[3] IEEE 576-2000

[4] IEEE 576-2000

[5] Manipulated from IEEE 576-2000. original number was 2.5; a five percent factor was factored to get 2.625

[6] EPRI

[7] American Polywater

[8] Southwire

[9] IEEE 576-2000

[10] SCL *Construction Guidelines* U4-3/NCI-170 and E6-1.0/NGE-70

[11] Southwire. Table 4 Maximum Allowable Conductor Stress. more accurate than the IEEE standard

[12] EPRI, Southwire

14. References

6020.01; "15 kV, 3/C, TRXLPE Insulated, Tape Shielded Cable;" *Material Standard*; SCL

6020.07; "28 kV, 1/C, TRXLPE Insulated, Flat Strap Shielded Cable;" *Material Standard*; SCL

6025.10; "15 kV, 3/C, EPR Insulated, Tape Shielded Cable;" *Material Standard*; SCL

9220.05 DRAFT; "Electric Power Cable and Conduit – Mutual Application"; *Design Standard*; SCL

9221.10; "Pulling Irons – Fundamentals and Detailed Requirements"; *Design Standard*, SCL

Chao, Yaochiem; SCL Standards student intern; subject matter expert and originator for 9271.05 (yaochiem.chao @seattle.gov)

Coefficients of Friction; American Polywater; Ron Raedeke, Research and Development

Detter, Chris; SCL Standards Engineer, (chris.detter @seattle.gov)

E6-1.0 / NGE-71; "Properties of 600 Volt and Weather-Proof Cables"; *Construction Guidelines*; SCL

E6-1.0/NGE-70; "Properties of Medium Voltage Cables"; *Construction Guideline*; SCL

"Electric Online Standards"; Conduit, Cable and Pulling; Puget Sound Energy

Hall, Alan; SCL Engineer; subject matter expert (alan.hall@seattle.gov)

"Handling and Installation"; Pirelli

IEEE Std 576-2000; "IEEE Recommended Practice for Installation, Termination, and Testing of Insulated Power Cable as Used in Industrial and Commercial Applications";

"Maximum Safe Pulling Lengths for Solid Dielectric Insulated Cables"; EPRI

NCI-62; "Pulling Iron Installation, In-Building Vaults, Network System"; *Construction Guidelines*; SCL

Ng, Sharon; SCL Senior Civil Engineer, subject matter expert (sharon.ng@seattle.gov)

Ogi, Irving; SCL Civil Engineer Supervisor, subject matter expert (irving.ogi@seattle.gov)

"Power Cable Installation Guide"; Southwire Company

Siddiqi, Uzma; SCL Standards Engineer, (uzma. siddiqi@seattle.gov)

U1-4.11/NCI-60; "Maximum Pulling Tensions for Installing Electrical Wire and Cables (Underground)"; *Construction Guideline*; SCL

U4-3.5/NCI-130; "Creepage of Cable"; *Construction Guideline*; SCL

Youngs, Rob; SCL Network Crew Chief, subject matter expert (youngs.rob@seattle.gov)

15 Appendix: Tables

Table 15.1, Inside diameter of commonly used conduits

Stock Number	Size, in	Conduit Type	Inner Diameter (***D***), in
012808	5 IPS	fiberglass	5.38
734524	5	PVC, Schedule 40	5.01
734523	4	PVC, Schedule 40	3.99

Source: SCL Material standards 7015.05, 7025.05

Table 15.2, Outside diameter and cable weight of commonly used cables

Stock Number	Cable Description	Outer Diameter (***D***), in	Weight, lbs/ft
012100	28 kV, 500 kcmil, 1/C	1.62	2.5
012102	28 kV, 1000 kcmil, 1/C	2.03	4.4
602025	28 kV, 1/0 AWG, 1/C+1/N	1.30	0.6
012735	15 kV, 500 kcmil, 3-1/C	1.447 / 3.02 single/ triplexed	6.7
623670	15 kV, 1000 kcmil, 3-1/C	1.833 / 3.94 single/ triplexed	12.8
613523	15 kV, #1 AWG, 3/C	2.10	2.1

Source: SCL Material Standards 6000-6499

Table 15.3, Maximum sidewall bearing pressure of commonly used cables

Stock Number	Cable Description	Maximum Sidewall Bearing Pressure, lbs/ft
012100	28 kV, 500 kcmil, 1/C	1,500
012102	28 kV, 1000 kcmil, 1/C	1,500
602025	28 kV, 1/0 AWG, 1/C+1/N	1,500
012735	15 kV, 500 kcmil, 3-1/C	1,500
623670	15 kV, 1000 kcmil, 3-1/C	1,500
613523	15 kV, #1 AWG, 3/C	1,500

Source: SCL Construction Guideline E6-1.0/NGE-70

Table 15.4, Conductor area (*A*)

Size, AWG	Cross-Sectional Area, cmil
10	10,380
8	16,510
7	20,820
6	26,240
5	33,090
4	41,740
3	52,620
2	66,360
1	83,690

Size, AWG or kcmil	Cross-Sectional Area, cmil
1/0	115,600
2/0	133,100
3/0	167,800
4/0	211,600
250	250,000
500	500,000
750	750,000
1,000	1,000,000

Table 15.5, Minimum bending radius of commonly used cables

Stock Number	Cable Description	Minimum Bending Radius, in
602025	28 kV, 1/0 AWG, 1/C+1/N	24
012098	28 kV, 1/0 AWG, 1/C+1/N	24
012099	28 kV, 350 kcmil, 1/C	24
012100	28 kV, 500 kcmil, 1/C	30
012101	28 kV, 750 kcmil, 1/C	36
012102	28 kV, 1000 kcmil, 1/C	48

Source: Detter, Chris; SCL Standards Engineer; subject matter expert.

dummy tab front - 9600

dummy tab back - 9600

MATTERS TO CONSIDER WHEN COMPLETING A STOCK RECOMMENDATION FORM

1. Scope

This Design Standard presents general information about completing and submitting a Stock Recommendation form for the purpose of adding, removing, or changing a material item in the Stores system. Refer to section 6.

Spare parts are outside the scope of this document.

2. Application

This Design Standard may be useful to any individual who is planning to submit a Stock Recommendation form to Standards for adding, removing, or changing a material item in the Stores system and would like the process to be as efficient and as timely as possible.

This document may also be used as a worksheet and attached to the submitted Stock Recommendation.

3. Discussion

3.1 Background

Historically, Standards personnel have not served their customers well in reviewing and processing Stock Recommendation forms. Some Stock Recommendation forms have languished in Standards in excess of a year. The reasons are many:

- Stock Recommendation forms are submitted with incomplete or inconsistent information
- Material items are viewed individually instead of in groups or as part of a related family
- Conflicting objectives exist between users of material and Material Control
- Prevalence of out-of-date Material Standards
- Shortage of Standards personnel and workload issues
- Shortage of available subject matter experts
- Originator or sponsor has moved on to a new job

Before continuing, it is helpful to understand the basic process as it currently exists. In general, the paperwork flows as follows:

A. Originator – Completes Stock Recommendation form as best as possible, has their supervisor sign it, and then forwards it to Standards. In many cases, Standards is the originator.

B. Standards – Reviews form and routes it to Safety / Health, if deemed necessary.

C. Safety / Health – Safety and Health (Environmental) are separate entities at Seattle City Light. If required, each reviews and approves or rejects the request and returns form to Standards.

D. Standards

If there are Safety and Health concerns, settles first; if none, proceeds with the following:

- Assembles and reviews technical literature and industry standards
- Reviews suppliers
- Obtains new Standard Number, if needed
- Obtains new Stock Number from Passport
- Reviews affect on other, related material items, fills out additional Stock Recommendation forms if required
- Prepares new Material Standard – this work can take time

standards coordinator	standards manager	unit director
John Shipek	John Shipek	Pamela S. Johnson

3. Discussion

3.1 Background

D. Standards, continued

- Prepares entry for Stock Catalog – this work can take time
- Sends email to originator, Material Control and key personnel who may have interest, alerting them that a new Stock Number has been obtained
- Signs Stock Recommendation form and forwards it to Material Control
- Publishing branch of Standards prepares layout of new or revised Material Standard and/or Stock Catalog page

E. Material Control – Completes remaining screens in Passport, signs off Stock Recommendation form, and forwards a copy to Standards and each warehouse that will be stocking the material item. Initiates order, if specified.

F. Warehouse – Files copy of Stock Recommendation approved by Material Control.

G. Standards – Files copy of Stock Recommendation approved by Material Control in paper-based and on-line history files.

Regarding sections A. to G., above, the more information the originator provides, the more efficiently a Stock Recommendation can be processed. A number of the points discussed below are not specifically part of the current Stock Recommendation form. If the originator requires more room to write, it is recommended that overflow information continue on an attached, separate sheet.

3.2 Basic Information

Stock Number – For requests to add a new material item, originator leaves this space blank. When removing or changing an existing material item, it is mandatory to include this information.

Stock Class-Page - For requests to add a new material item, originator is encouraged to recommend a page in the Stock Catalog that would be most appropriate. When removing or changing an existing material item, it is mandatory to include this information. Note: Stock Catalog page numbers can shift over time when new material items are added and space must be made.

Material Standard Number – For requests to add a new material item, the originator is invited to suggest a number, otherwise this space may be left blank. When removing or changing an existing material item, it is mandatory to include the Standard Number.

Item Description (Remarks) – For requests to add a new material item, originator should include the major attributes of the product, especially those that distinguish it from similar material items. Whenever possible, originator should attach copies of marked-up manufacturer's literature, catalog pages, original photographs (jpeg or tiff files), and/or drawings. When removing or changing an existing material item, the item description need only be complete enough to eliminate confusion.

3.3 Originator Input

Originator's Information

Originator's Name

_____
(printed)

It is important that Standards knows who originated the request so that questions may be quickly directed without added work. Most signatures are not legible. Signatures should appear on original Stock Recommendation form.

Originator's Signature

_____
(signature/date) Required

Org Unit _____ Required

Telephone _____ Required

3. Discussion

3.3 Originator Input, continued

Actions

Priority (check only one):

[ ] High

[ ] Normal

[ ] Low

This information is not currently part of the Stock Recommendation form, however, knowing priority can assist Standards in better serving its customers. It is recommended that an originator with a high priority request plan time to meet with Standards personnel to discuss the project. A face-to-face meeting will improve response time greatly.

Recommended Action (check only one and fill in **from/to** information as appropriate):

[ ] Add new product

[ ] Change existing specification/ordering information

[ ] Issue stock to depletion

[ ] Remove stock from inventory and submit to Salvage to sell or scrap

[ ] Change existing reorder points:

North Service Center

from:	***to:***
Min _____	Min _____
Max _____	Max _____

South Service Center

from:	***to:***
Min _____	Min _____
Max _____	Max _____

[ ] Change existing emergency replacement Stock level:

North Service Center

from:	***to:***
_____	_____

South Service Center

from:	***to:***
_____	_____

[ ] Change in Passport status (see Material Control section)

[ ] Other _____

Checking the appropriate box and filling in max/min information, if required, illuminates the scope of work in a clear and consistent manner. Note: each warehouse established has their own min/max stocking levels.

Application Remarks

_____

_____

_____

_____

It is very important to be detailed and clear about how this new material item expected to be applied. In other words, what is it for? This application information will be directly incorporated into the Material Standard and the Stock Catalog. This information empowers Seattle City Light personnel from all walks to better utilize and manage our material.

Recommended Action Based On (check all that apply):

[ ] Improved technology

[ ] New corporate philosophy

[ ] Laws, code, regulatory considerations

[ ] Manufacturer/distributor changes

[ ] National/industry standard changes

[ ] Pilot project/Product evaluation (Standards approval required)

[ ] Failure history

[ ] Incoming inspection considerations

[ ] Installation/operation/maintenance considerations

[ ] Safety considerations

[ ] Other _____

3. Discussion

3.3 Originator Input, continued

Does product have minimum order requirements?

_____ Yes ____ No

If yes, what are they?

_____

Does recommended action affect one or more other Stock Numbers?

_____ Yes ____ No

Is this material item:

[ ] New and/or replaces other material?

[ ] Being replaced or deemed obsolete?

Add Material Item

This section applies only to a material item that is new and/or replaces other existing material(s).

New Stock Number Replaces

Stock Number	*Description*	*Reason*
_____	_____	_____
_____	_____	_____
_____	_____	_____

Note: a separate Stock Recommendation form must be submitted for each Stock Number that is being replaced.

To describe more complex relationships between old and new Stock Numbers, consider using separate sheet of paper. Indicate if compatibility between each old and new Stock Numbers is forward, backward, or forward and backward.

Estimated unit price

$_____

Estimated first year usage

_____

Identify suggested manufacturers, distributors, agents, ordering, and preferred packaging information (attach sales literature, catalog sheets, and/or drawings, if available):

_____

_____

_____

_____

Recommended stocking location (check all that apply):

[ ] North Service Center warehouse

[ ] South Service Center warehouse

Boundary and Skagit derive their material from the North and South Service Center warehouses. They are not stocking locations unto themselves.

Recommended immediate purchase?

_____ Yes ____ No

The process for initial orders is under evaluation. Standards is of the opinion that neither they or the Stock Recommendation form should initiate an order. Standards recommends initial orders begin with a Material Request (MR) being submitted by the normal means. Many months can pass between the time a Stock Recommendation form is filled out and the time it is ready for implementation. It would be prudent for Material Control to withhold ordering material until commitment from a responsible party was verified. Indicating "Yes" above means only that Material Control should expect to receive a Material Request or a phone call.

Is this Stock Recommendation related to a specific project

_____ Yes ____ No

If yes, identify project and critical dates:

_____

3. Discussion

3.3 Originator Input, continued

Remove Material Item

This section applies only to a material item that is being replaced or has been deemed obsolete.

Disposition of replaced or obsolete material (check only one):

[ ] Issue stock to depletion

[ ] Remove stock from inventory and submit to Salvage to sell or scrap

It is very helpful for Material Control to know what to do with material that has been deemed obsolete or has been replaced with something better. If the replaced product is both used and useful, it is recommended it be issued to depletion. If it is old stock and will likely sit on warehouse shelves for a year or more, it may be best to simply remove it from inventory and transfer it to Salvage. Warehousing material consumes a variety of valuable resources: space, monetary (taxes), and labor (annual inventory counts). A quick economic analysis should be performed to determine if a replaced item should be allowed to remain in Stock or transferred to Salvage. Obsolete material should be removed from inventory without further question. A Stock Number may be canceled only after inventory becomes zero.

For material that is recommended to be transferred to Salvage, indicate:

Total on-hand inventory _____

Average unit price $_____

Total inventory value $_____

Year-to-Date Usage _____
(indicate unit of issue)

For the period

from _____

to _____

Material Control can assist the Originator compile the above data.

Originator's Manager's Approval

Originator's Manager's Approval

_____
(signature/date)

3.4 Standards

Is Standards Committee review recommended or required?

_____ Yes ____ No

If yes, indicate committee (check all that apply):

[ ] OH/URD (presently suspended until further notice)

[ ] Network

If yes, date of Standards Committee review and approval

_____

Standards Engineer Approval

_____
(signature/date)

Standards Manager Approval

_____
(signature/date)

3.5 Safety

Is Safety approval or notification required?

_____ Yes ____ No

Safety Acknowledgment

_____
(signature/date)

3. Discussion, continued

3.6 Health (Environmental)

Is Environmental approval or notification required?

_____ Yes ____ No

Product reviewed and determined (check only one):

[ ] Product does not have an MSDS sheet

[ ] Safe

[ ] Safe, with qualification

____

[ ] Not safe/Rejected

____

Is Material Safety Data Sheet (MSDS) sheet required?

_____ Yes ____ No

A product is considered hazardous and requires Material Safety Data Sheet (MSDS) if it has one or more of the following properties (check all that apply):

[ ] Flamable/ combustible – can be easily set on fire.

[ ] Explosive/ reactive – can detonate or explode through exposure to heat, sudden shock, pressure or incompatible substances.

[ ] Corrosive – chemical reaction can burn and destroy living tissues or other materials when brought in contact.

[ ] Toxic – capable of causing injury or death through ingestion, inhalation, or skin absorption.

A Material Safety Data Sheet (MSDS) lists the ingredients in a hazardous product, the hazards to safety and health, and the precautions to follow when using the product. If the manufacturer claims its product is a trade secret, the ingredients will not be listed on the MSDS.

If potentially hazardous, attach MSDS sheet.

Health (Environmental) Acknowledgment

____
(signature/date)

3.7 Material Control

Unique description

_ _ _ _ _ _ _ _ _ _ _ _ _ _ _

_ _ _ _ _ _ _ _ _ _ _ _ _ _ _

_ _ _ _ _ _ _ _ _ _ _ _ _ _ _

_ _ _ _ _ _ _ _ _ _ _ _ _ _ _

_ _ _ _ _ _ _ _ _ _ [70 characters]

The unique description should provide as much information as possible without being cryptic. It is limited to 70 characters due to Passport's design. The description should be similar in form to other, similar material items and take the form: noun, adjective, adjective, adjective.

When adding a material item, it is only necessary to complete the **to:** column at right below. When changing or removing a material item, complete both **from:** and **to:** columns.

Indicate change in basic information (from accountant information, all changes that apply):

from:	*to:*
Category	Category
Name	Name
Type	Type

3. Discussion, continued

3.7 Material Control, continued

from:	*to:*
Unit of issue *[EA, FT, RL, etc.]*	Unit of issue
Stock type *[stock, non-stock, etc.]*	Stock type
Storage level *[type of storage required]*	Storage level
ABC code *[value and usage information]*	ABC code
Stocking location *[SSC or NSS]*	Stocking location

Indicate Passport status
(all changes that apply):

from:	*to:*
[ ] BIOMONLY	[ ] BIOMONLY
[ ] H/CONVRS	[ ] H/CONVRS
[ ] H/PEEVAL	[ ] H/PEEVAL
[ ] H/RECODE	[ ] H/RECODE
[ ] H/REVIEW	[ ] H/REVIEW
[ ] H/USER	[ ] H/USER
[ ] NEWITEM	[ ] NEWITEM
[ ] NOPURCH	[ ] NOPURCH
[ ] OBSOLETE	[ ] OBSOLETE
[ ] READY	[ ] READY
[ ] RECODED	[ ] RECODED
[ ] REJECTED	[ ] REJECTED

Material Control Approval

_____
(signature/date)

3.8 Incoming Inspection

Does product have any special, incoming inspection requirements?

_____ Yes ____ No

If yes, what components should an incoming inspection include?

_____

_____

3.9 Warehouse

Copy of Stock Recommendation approved by Material Control is forwarded to each warehouse that will be stocking the new item.

4. Determination

After Standards personnel have reviewed the Recommendation to add, remove, or change an item in Stores. They will provide the originator with one of the following determinations:

- Standards **approves** the Recommendation and will process it as a **high-priority** project.
- Standards **approves** the Recommendation and will process it as a **normal-priority** project.
- Standards **rejects** the Recommendation as submitted due to **incomplete or inconsistent documentation**.
- Standards **rejects** the Recommendation due to the **lack of strong business case**. This may include: common item availability, cost, low usage, high comparative administrative cost, unclear stated application or need, and/or unacceptable health/safety/environmental risk.
- Standards **rejects** the Recommendation and provides Originator with an explanation.

5. References

761-L (7-03); "Seattle City Light Department Stock/Spares Recommendation"; SCL form; 2003

Shipek, John; SCL Standards Engineer, subject matter expert and originator of Design Standard 9605.05 (john.shipek@seattle.gov)

6. Form

SEATTLE CITY LIGHT DEPARTMENT

STOCK/SPARES RECOMMENDATION

761 1 (7 09)

ORIGINATOR

RECOMMENDED ACTION
- ☐ NEW STOCK ITEM: ESTIMATED USE FIRST YEAR _____ UNITS
- ☐ NEW SPARES STOCK ITEM: MINIMUM _____ MAXIMUM _____ UNITS PER EQPTMT _____
  QTY. ON HAND _____ CREDIT O.U.# _____ CREDIT W.O.# _____
- ☐ ACCEPTANCE TEST REQUIRED: TEST LOCATION
- ☐ CHANGE OF DATA REQUIRED (SEE REMARKS)
- ☐ REPLACES/ REPLACED BY STOCK NUMBER: QTY
- ☐ TRANSFER TO GENERAL STOCK NO.: _____ QTY. _____
- ☐ TRANSFER TO SPARES STOCK NO.: _____ QTY. _____
- ☐ CHANGE REORDER QUANTITY: MINIMUM MAXIMUM
- ☐ SPECIAL ORDER (SEE REMARKS)
- ☐ DO NOT REORDER
- ☐ REPLENISH FROM SALVAGE RETURNS
- ☐ REVIEW AGAIN IN _____ ☐ MONTHS/ ☐ YEARS
- ☐ DEPLETE REMAINING STOCK ☐ STOCK REDUCTION: NO. OF UNITS _____ ☐ OBSOLETE
- ☐ ELIMINATE AS STOCK ITEM ☐ SELL OR SCRAP REMAINING STOCK ☐ CANCEL
- ☐ REINSTATE
- ☐ ADD EQUIPMENT CODE: ☐ DELETE EQUIPMENT CODE: _____

OTHERS: EXPLAIN _____

REMARKS: ITEM DESCRIPTION, SIZE, TYPE, ETC. SUGGESTED VENDORS, INTENDED APPLICATION, UNIT PACKAGING, UNIT, NUMBER OF USING ORGS. OTHER.

STOCK NUMBER

STOCK CAT-CLASS-PAGE | ESTIMATED UNIT PRICE

MATERIAL STANDARDS NO./REV DATE

CONSTRUCTION/MODEL NE NUMBER

ORIGINATOR'S NAME

UNIT | TELEPHONE | DATE

ORIGINATOR'S MANAGER'S APPROVAL | DATE

SAFETY/HEALTH APPROVAL | DATE

STANDARDS PROCESSED BY | DATE

STD ENGINEERING APPROVAL | DATE

MATERIAL CONTROL

STOCK NUMBER | CLASS-PAGE | MHS | MATERIAL STANDARD | STRAT | REPT SYMBOLS

ABBREVIATED DESCRIPTION

REMARKS: Item description, Size, Type, etc. Intended Application/Type of Equipment, Unit Packaging, Unit of Issue, Brand, Part #, Suggested Vendor, Desired Warehouse Location. Usage Per Equipment, Other.

UNIT | SPARES STOCK NUMBER | SPARES ABBREVIATED DESCRIPTION

☐ REVIEW FOR DUPLICATE ☐ SFMS ☐ MMS ☐ STOCK CARD
☐ EQUIPMENT CODE ☐ SIMS ☐ LPS

WAREHOUSE LOCATION: SSC [1] BOU [2] SKG [3] NSC [4] OTHER [5]

SPECIFIC LOC. FOR 'OTHER'

P.R. NUMBER/STORES RETURN NO.

CONTROLLER SIGNATURE | DATE

WAREHOUSE

REMARKS:

☐ FILE FOLDER ☐ PHOTOGRAPH ☐ COMPUTER

☐ ENTERED ON SPARES WAREHOUSE RECORDS | DATE | WAREHOUSE SIGNATURE

☐ WHSE/SPARES ☐ ORIGINATOR ☐ ENGINEERING STANDARDS ☐ OTHERS _____

REQUIREMENTS FOR FAILURE ANALYSIS REPORTS

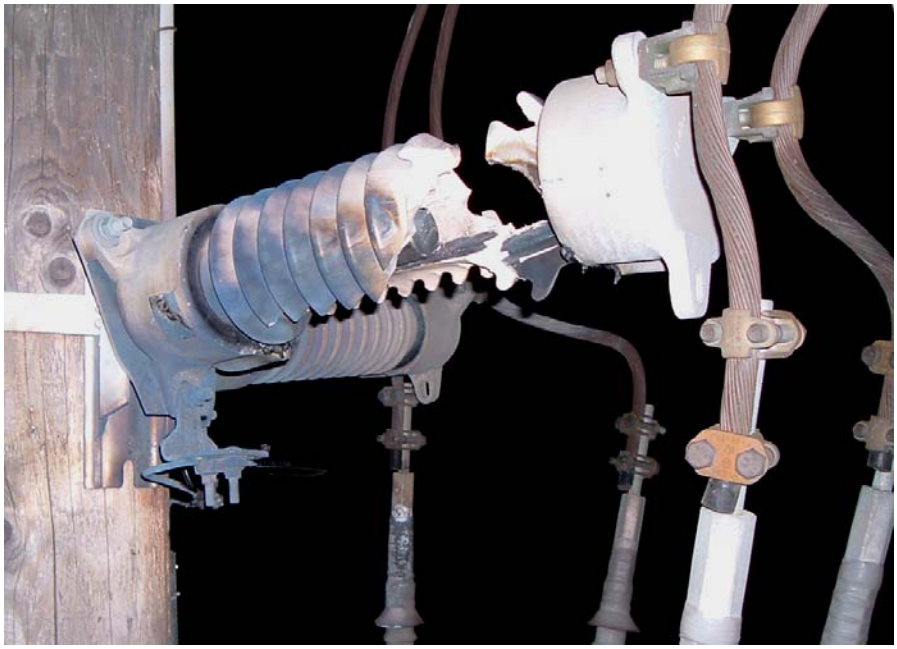

1. Scope

This standard identifies the minimum and desired elements that should be contained in an acceptable material/equipment failure analysis report.

Reports may be authored by Seattle City Light personnel, the manufacturer of the suspect item, or a third party forensics engineer.

Basic process steps are also outlined.

Solutions to problems associated with defective or misapplied material are outside the scope of this standard.

2. Application

This standard is directed at Seattle City Light personnel, manufacturers, and third party forensics engineers to better understand the expectations for producing a useful and informative failure analysis report.

Until a failure analysis report presents a final determination, a problematic material item or piece of equipment should only be considered suspect. For convenience, it is not unusual for personnel to use the terms failed and suspect interchangeably. Standards encourages the policy of innocent until proven guilty.

The central question to be answered by a failure investigation is whether the problem was the result of a manufacturing quality defect or utility-side error. The solutions to each are very different. It is acknowledged that in some cases a failure investigation may not be able to identify a root cause.

standards coordinator	standards supervisor	unit director
John Shipek	John Shipek	Darnell Cola

3. Definition

Root Cause Analysis (RCA) - A class of problem solving methods aimed at identifying the root causes of problems or events. The practice of RCA is predicated on the belief that problems are best solved by attempting to address, correct or eliminate root causes, as opposed to merely addressing the immediately obvious symptoms. By directing corrective measures at root causes, it is more probable that problem recurrence will be prevented.

4. Informational Requirements

4.1 Provided by Seattle City Light

The following information shall be provided by Seattle City Light to the author of the failure investigation report:

Minimum

- Short description of product
- Stock number
- Material Standard number
- Name of manufacturer
- Brief description of failure
- Failure (or removed from service) date
- Physical location of failure
- Electrical location of failure
- Did a customer outage result?
- Name of responsible crew chief

Desired (as applicable)

- Present location of failed item
- How long item had been in service prior to failure
- Did a protection device operate
- Purchase order number
- Relevant photographs (labeled)
- Complete nameplate data, catalog number, and/or other special markings
- Date of manufacture
- Indication if the suspect item is to be returned to Seattle City Light following forensics work

Some manufacturers provide a failure analysis request form to complete.

4.2 Included in the Report

Minimum

- The minimum information cited in section 4.1.
- Unique report number
- Report revision date
- Name of Manufacturer
- Manufacturer's plant location/address
- Report's author
- Root cause
- Recommended corrective action(s) to prevent reoccurrence

Desired (as applicable)

- The desired information cited in section 4.1.
- Outline of dissection process
- Relevant photographs (labeled)
- X-ray images (labeled)
- Potential safety concerns

General Report Structure

- Manufacturer/author/date identification
- Utility provided information
- Observations
- Analysis
- Root cause determination
- Recommended corrective action(s) to prevent reoccurrence

5. Basic Process

Basic process steps are as follows:

A. Failed item is tagged and delivered to the Quality Assurance office located at the South Service Center.

Note: *Suspect material item shall not be subjected to destructive inspection or otherwise permanently altered without the approval of the Supervisor of Standards.*

B. Seattle City Light's Quality Assurance office informs manufacturer's representative of failure and provides information cited in section 4.1.

5. Basic Process, continued

C. Seattle City Light's Standards Engineer provides key Engineering, Operations, and Material Control personnel with periodic status reports.

D. Manufacturer's representative forwards information package to manufacturer and awaits further instruction.

E. Seattle City Light's Quality Assurance office obtains return authorization number from manufacturer.

F. Seattle City Light's Quality Assurance office coordinates the disposition of failed material item with manufacturer/representative.

G. Seattle City Light's Quality Assurance office compiles and forwards supplemental information to manufacturer/representative, as requested.

H. Manufacturer/representative provides Seattle City Light with dated, *draft* failure investigation report (in PDF format).

I. Seattle City Light reviews draft report and informs manufacturer/representative if report meets our requirements.

J. If the report is determined to be complete and acceptable, the manufacturer/representative is given authorization to issue a final report (in PDF format).

6. References

Shipek, John; SCL Standards Engineer; subject matter expert and originator of 9606.71 (john.shipek@seattle.gov)

Wang, Quan; SCL Standards Engineer; subject matter expert for 9606.71 (quan.wang@seattle.gov)

Wikipedia.org; root cause analysis definition

PROPERTIES OF 600 VOLT AND WEATHER-PROOF CABLES

1. Scope

This design standard lists basic physical properties for the variety of 600 volt and weather-proof cables in use on Seattle City Light's system.

Medium voltage cable, control cable, and bare conductor are outside the scope of this standard.

2. Application

Cable properties are as described in the tables 5.1 and 5.2. These tables are designed to be read across the two-page spread.

This design standard is intended to be used by Seattle City Light engineers, warehouse personnel, installation crews, and suppliers to more easily identify the wide-variety of cable in use at Seattle City Light and to improve access to useful cable attributes.

This design standard may be distributed externally provided approval is first obtained from the Manager of Standards.

3. Properties

Application information and graphics may be found in Class 60 of the City Light Stock Catalog.

Conductor diameters may vary widely due to the variety of conductor shapes (compact, compressed, unilay, combination unilay, single input wire, etc.) allowed by standard; a 4/0 connector should still be expected to work with a 4/0 conductor.

In addition to information provided in the tables, the following attributes may be found in the pertinent Material Standard:

- Code words as assigned by the Aluminum Association
- Governing industry standards
- Normal, emergency overload, and short circuit operating temperatures
- Insulation thickness, minimum point
- Insulation thickness, maximum point
- Special identification, if any
- Packaging information
- Approved suppliers

Refer to Construction Guideline U1-4.11/NCI-60 and Design Standards 9271.05 for cable pulling fundamentals and work practices.

4. Abbreviations and Terminology

The following terms are used in the tables on subsequent pages.

1/C	Single conductor
1350-H19	Aluminum 1350, extra hard (known as EC aluminum prior to 1972)
6/1 ACSR	Aluminum conductor, steel reinforced (six strands aluminum, one strand steel)
8000	Aluminum 8000 series
active	Material Standards are up-to-date and cable can be ordered through the warehouse. *Note: A Stock Number does not imply a material item is in stock. Consult Passport for availability.*
copper	Copper, soft drawn
LLDPE	Linear low density polyethylene
na	Not applicable or not available
quad	Three phase conductors plus one full (or reduced) neutral, twisted
triplex	Two phase conductors plus one full (or reduced) neutral, twisted
unsupported	Material Standards are no longer maintained. Data is provided for historical purposes. Product may or may not be available.
USE-2	A letter designation defined by UL for a particular application
USE-2-RHH-RHW-2	A letter designation defined by UL for a particular application
XHHW	A letter designation defined by UL for a particular application
XLPE	Cross-linked polyethylene

standards coordinator	standards supervisor	unit director
John Shipek	John Shipek	Darnell Cola

5.1, Table 1, Cable Data Sorted by Stock Number (two-page spread)

	Cable Assembly				Phase Conductor		Neutral
▼ Stock Number	Status	Rated Voltage, V	Construc-tion	Nominal Diameter, in.	Size, AWG/ kcmil	Alloy	Size, AWG/ kcmil
1	2	3	4	5	6	7	8
012580	active	600	triplex	0.95	1/0	1350-H19	2
013271	active	600	triplex	0.54	6	1350-H19	6
600318	active	none	1/C	0.63	4/0	1350-H19	na
600664	active	600	triplex	0.95	1/0	1350-H19	2
600669	active	600	triplex	1.26	4/0	1350-H19	2/0
600672	active	600	triplex	0.75	2	1350-H19	4
600673	active	600	triplex	0.75	2	1350-H19	4
600734	active	600	quad	0.87	2	1350-H19	2
600735	active	600	quad	1.12	1/0	1350-H19	1/0
600738	active	600	quad	1.49	4/0	1350-H19	4/0
600741	active	600	quad	na	350	1350-H19	4/0
601007	unsupported	600	1/C	0.45	1	8000	na
601011	active	600	1/C	0.69	4/0	8000	na
601014	active	600	1/C	0.88	350	8000	na
601015	active	600	1/C	1.01	500	8000	na
601016	active	600	1/C	1.20	750	8000	na
601018	active	600	1/C	1.07	750	8000	na
605040	active	600	triplex	1.47	4/0	1350-H19 or 8000	2/0
605076	active	600	triplex	1.85	350	1350-H19 or 8000	4/0
605084	active	600	triplex	2.12	500	1350-H19 or 8000	350
605142	active	600	quad	1.82	4/0	1350-H19 or 8000	2/0
605176	active	600	quad	2.31	350	1350-H19 or 8000	4/0
605186	active	600	quad	na	500	1350-H19 or 8000	350
613730	active	600	1/C	0.43	2	copper	na
613732	unsupported	600	1/C	0.55	1/0	copper	na
613733	active	600	1/C	0.59	2/0	copper	na
613734	unsupported	600	1/C	0.65	3/0	copper	na
613735	active	600	1/C	0.71	4/0	copper	na
613736	active	600	1/C	0.79	250	copper	na
613737	unsupported	600	1/C	0.84	300	copper	na
613738	active	600	1/C	0.89	350	copper	na
613740	active	600	1/C	1.03	500	copper	na
613743	active	600	1/C	1.24	750	copper	na
640450	active	600	triplex	0.51	8	copper	8

Neutral		Jacket	Cable Assembly				
Alloy	Rated Strength, Messenger, lbs.	Material	Weight per Foot, lbs.	Special Marking	Applica-tion	Material Standard Number	▼ Stock Number
9	10	11	12	13	14	15	16
6/1 ACSR	2,850	XLPE	0.39	none	OH	6007.50	**012580**
6/1 ACSR	1,180	XLPE	0.12	none	OH	6007.50	**013271**
na	3,450	LLDPE	0.25	none	OH	6005.1	**600318**
6/1 ACSR	2,850	XLPE	0.39	none	OH	6007.50	**600664**
6/1 ACSR	5,300	XLPE	0.73	none	OH	6007.50	**600669**
6/1 ACSR	1,860	XLPE	0.24	none	OH	6007.50	**600672**
6/1 ACSR	1,860	XLPE	0.24	none	OH	6007.50	**600673**
6/1 ACSR	2,850	XLPE	0.37	none	OH	6007.50	**600734**
6/1 ACSR	4,380	XLPE	0.58	none	OH	6007.50	**600735**
6/1 ACSR	8,350	XLPE	1.09	none	OH	6007.50	**600738**
6/1 ACSR	8,350	XLPE	1.59	none	OH	6007.50	**600741**
na	na	XLPE	0.14	UL-XHHW	UG	none	**601007**
na	na	XLPE	0.26	USE-2-RHH-RHW-2	UG	6010.10	**601011**
na	na	XLPE	0.42	USE-2-RHH-RHW-2	UG	6010.10	**601014**
na	na	XLPE	0.59	USE-2-RHH-RHW-2	UG	6010.10	**601015**
na	na	XLPE	0.86	USE-2-RHH-RHW-2	UG	6010.10	**601016**
na	na	XLPE	0.83	UL-XHHW	UG	6009.0	**601018**
na	na	XLPE	0.73	USE-2	UG	6010.10	**605040**
na	na	XLPE	1.16	USE-2	UG	6010.10	**605076**
na	na	XLPE	1.70	USE-2	UG	6010.10	**605084**
na	na	XLPE	1.02	USE-2	UG	6010.10	**605142**
na	na	XLPE	1.64	USE-2	UG	6010.10	**605176**
na	na	XLPE	2.40	USE-2	UG	6010.10	**605186**
na	na	XLPE	0.27	USE-2-RHH-RHW-2	UG	6010.00	**613730**
na	na	XLPE	0.43	USE-2-RHH-RHW-2	UG	6010.00	**613732**
na	na	XLPE	0.54	USE-2-RHH-RHW-2	UG/OH	6010.00	**613733**
na	na	XLPE	0.67	USE-2-RHH-RHW-2	UG	6010.00	**613734**
na	na	XLPE	0.71	USE-2-RHH-RHW-2	UG	6010.00	**613735**
na	na	XLPE	1.00	USE-2-RHH-RHW-2	UG	6010.00	**613736**
na	na	XLPE	1.19	USE-2-RHH-RHW-2	UG	6010.00	**613737**
na	na	XLPE	1.38	USE-2-RHH-RHW-2	UG	6010.00	**613738**
na	na	XLPE	1.67	USE-2-RHH-RHW-2	UG	6010.00	**613740**
na	na	XLPE	2.47	USE-2-RHH-RHW-2	UG	6010.00	**613743**
copper	na	XLPE	0.17	XHHW	UG	6404.50	**640450**

5.2, Table 2, Cable Data Sorted by Standard Number and Conductor Size (two-page spread)

	Cable Assembly				2nd ▼ Phase Conductor		Neutral
Stock Number	**Status**	**Rated Voltage, V**	**Construc-tion**	**Nominal Diameter, in.**	**Size, AWG/ kcmil**	**Alloy**	**Size, AWG/ kcmil**
1	**2**	**3**	**4**	**5**	**6**	**7**	**8**
601007	unsupported	600	1/C	0.45	**1**	8000	na
600318	active	none	1/C	0.63	**4/0**	1350-H19	na
013271	active	600	triplex	0.54	6	1350-H19	6
600672	active	600	triplex	0.75	**2**	1350-H19	4
600673	active	600	triplex	0.75	**2**	1350-H19	4
600734	active	600	quad	0.87	**2**	1350-H19	2
012580	active	600	triplex	0.95	**1/0**	1350-H19	2
600664	active	600	triplex	0.95	**1/0**	1350-H19	2
600735	active	600	quad	1.12	**1/0**	1350-H19	1/0
600669	active	600	triplex	1.26	**4/0**	1350-H19	2/0
600738	active	600	quad	1.49	**4/0**	1350-H19	4/0
600741	active	600	quad	na	**350**	1350-H19	4/0
601018	active	600	1/C	1.07	**750**	8000	na
613730	active	600	1/C	0.43	**2**	copper	na
613732	unsupported	600	1/C	0.55	**1/0**	copper	na
613733	active	600	1/C	0.59	**2/0**	copper	na
613734	unsupported	600	1/C	0.65	**3/0**	copper	na
613735	active	600	1/C	0.71	**4/0**	copper	na
613736	active	600	1/C	0.79	**250**	copper	na
613737	unsupported	600	1/C	0.84	**300**	copper	na
613738	active	600	1/C	0.89	**350**	copper	na
613740	active	600	1/C	1.03	**500**	copper	na
613743	active	600	1/C	1.24	**750**	copper	na
601011	active	600	1/C	0.69	**4/0**	8000	na
605040	active	600	triplex	1.47	**4/0**	1350-H19 or 8000	2/0
605142	active	600	quad	1.82	**4/0**	1350-H19 or 8000	2/0
601014	active	600	1/C	0.88	**350**	8000	na
605076	active	600	triplex	1.85	**350**	1350-H19 or 8000	4/0
605176	active	600	quad	2.31	**350**	1350-H19 or 8000	4/0
601015	active	600	1/C	1.01	**500**	8000	na
605084	active	600	triplex	2.12	**500**	1350-H19 or 8000	350
605186	active	600	quad	na	**500**	1350-H19 or 8000	350
601016	active	600	1/C	1.20	**750**	8000	na
640450	active	600	triplex	0.51	**8**	copper	8

Neutral		Jacket	Cable Assembly			1st ▼	
Alloy	Rated Strength, Messenger, lbs.	Material	Weight per Foot, lbs.	Special Marking	Applica-tion	Material Standard Number	Stock Number
9	10	11	12	13	14	15	16
na	na	XLPE	0.14	UL-XHHW	UG	**none**	**601007**
na	3,450	LLDPE	0.25	none	OH	**6005.1**	**600318**
6/1 ACSR	1,180	XLPE	0.12	none	OH	**6007.50**	**013271**
6/1 ACSR	1,860	XLPE	0.24	none	OH	**6007.50**	**600672**
6/1 ACSR	1,860	XLPE	0.24	none	OH	**6007.50**	**600673**
6/1 ACSR	2,850	XLPE	0.37	none	OH	**6007.50**	**600734**
6/1 ACSR	2,850	XLPE	0.39	none	OH	**6007.50**	**012580**
6/1 ACSR	2,850	XLPE	0.39	none	OH	**6007.50**	**600664**
6/1 ACSR	4,380	XLPE	0.58	none	OH	**6007.50**	**600735**
6/1 ACSR	5,300	XLPE	0.73	none	OH	**6007.50**	**600669**
6/1 ACSR	8,350	XLPE	1.09	none	OH	**6007.50**	**600738**
6/1 ACSR	8,350	XLPE	1.59	none	OH	**6007.50**	**600741**
na	na	XLPE	0.83	UL-XHHW	UG	**6009.0**	**601018**
na	na	XLPE	0.27	USE-2-RHH-RHW-2	UG	**6010.00**	**613730**
na	na	XLPE	0.43	USE-2-RHH-RHW-2	UG	**6010.00**	**613732**
na	na	XLPE	0.54	USE-2-RHH-RHW-2	UG/OH	**6010.00**	**613733**
na	na	XLPE	0.67	USE-2-RHH-RHW-2	UG	**6010.00**	**613734**
na	na	XLPE	0.71	USE-2-RHH-RHW-2	UG	**6010.00**	**613735**
na	na	XLPE	1.00	USE-2-RHH-RHW-2	UG	**6010.00**	**613736**
na	na	XLPE	1.19	USE-2-RHH-RHW-2	UG	**6010.00**	**613737**
na	na	XLPE	1.38	USE-2-RHH-RHW-2	UG	**6010.00**	**613738**
na	na	XLPE	1.67	USE-2-RHH-RHW-2	UG	**6010.00**	**613740**
na	na	XLPE	2.47	USE-2-RHH-RHW-2	UG	**6010.00**	**613743**
na	na	XLPE	0.26	USE-2-RHH-RHW-2	UG	**6010.10**	**601011**
na	na	XLPE	0.73	USE-2	UG	**6010.10**	**605040**
na	na	XLPE	1.02	USE-2	UG	**6010.10**	**605142**
na	na	XLPE	0.42	USE-2-RHH-RHW-2	UG	**6010.10**	**601014**
na	na	XLPE	1.16	USE-2	UG	**6010.10**	**605076**
na	na	XLPE	1.64	USE-2	UG	**6010.10**	**605176**
na	na	XLPE	0.59	USE-2-RHH-RHW-2	UG	**6010.10**	**601015**
na	na	XLPE	1.70	USE-2	UG	**6010.10**	**605084**
na	na	XLPE	2.40	USE-2	UG	**6010.10**	**605186**
na	na	XLPE	0.86	USE-2-RHH-RHW-2	UG	**6010.10**	**601016**
copper	na	XLPE	0.17	XHHW	UG	**6404.50**	**640450**

6. References

6005.1; "Wire, Aluminum Weather-Resistant, Polyethylene Type;" Material Standard; SCL

6007.50; "600 V, Aluminum, Overhead, Triplex and Quad Service Drop Cable;" Material Standard; SCL

6009.0; "600 V, Aluminum, Underground, 1/C, Type XHHW-2 Cable;" Material Standard; SCL

6010.00; "600 V, Copper, Underground, Single Conductor Cable;" Material Standard; SCL

6010.10; "600 V, Aluminum, Underground, 1/C, Triplex, and Quad Secondary Cable;" Material Standard; SCL

6404.50; "Cable, Streetlight, Underground, Cross-Linked Polyethylene-Insulated;" Material Standard; SCL

9271.05; "Cable Pulling Engineering Fundamentals;" Design Standard; SCL

ACPC Inc.; "Data Handbook, Aluminum Conductor, T&D Conductors, Overhead, Underground"; ACPC Inc.; Summer 1994

E6-1.1/NGE-71 (canceled); "Properties of 600 Volt and Weather-Proof Cables;" Construction Guideline; SCL

Shipek, John; SCL Standards Engineer, subject matter expert, and originator of 9650.03 (john.shipek@seattle.gov)

U1-4.11/NCI-60; "Cable Pulling Calculations: Maximum Pulling Tensions;" Construction Guideline; SCL

www.cable.alcan.com

ELECTRICAL PROPERTIES OF 600 VOLT CABLES

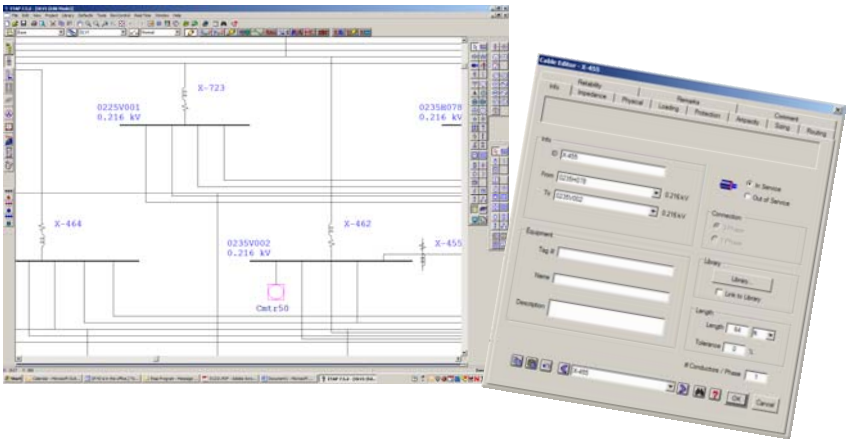

1. Scope

This standard presents in a convenient format the highly-specialized electrical properties of the 600 volt cables used to construct Seattle City Light's underground distribution system. These electrical properties include:

- Conductor resistance
- Neutral resistance
- Capacitance
- Inductance
- Impedance
- Reactance
- Three phase reactance

Basic *physical* properties of 600 volt cable are outside the scope of this standard.

Underground transmission and medium voltage cables are outside the scope of this standard.

2. Application

This standard provides engineers with the specialized data required by computer programs such as etap to perform load flow and short circuit analyses.

If some of the text is too small to accurately read in printed paper form, try viewing online.

Refer to Design Standard 9650.03 for the basic *physical* properties of 600 volt cable.

Refer to Design Standard 9660.04 for the electrical properties of *medium* voltage cable.

3. Electrical Properties

Following are copies of General/BICC data sheets for 600 volt cables.

Stock Number	pages
601011	2-3
601014	4-5
601015	6-7
601016	8-9
601018	10-11
613730	12-13
613732	14-15
613733	16-17
613734	18-19
613735	20-21
613736	22-23
613737	24-25
613738	26-27
613740	28-29
613743	30-31

standards coordinator	standards supervisor	unit director
John Shipek	John Shipek	Darnell Cola

General Cable

BICC BRAND

Drawing / Data Sheet

[SCL Stock Number 601011]

Triplexed Cable, 600V (UL 44 Type RHH/RHW-2 & UL 854 Type USE-2)

Representative drawing not to scale

Component Description	Thickness (inches) Min.	Min. Avg.	Max.	Diameter (inches) Min.	Nom.*	Max.
A: Phase Conductor 4/0 AWG Compressed (19W) 8000 Series Aluminum Phase Conductor	--	--	--	0.488	0.498	0.503
A-1: Insulation Extruded Crosslinked Polyethylene (XLPE)	0.072	0.080	--	--	0.663	--
B: Neutral Conductor 4/0 AWG Compressed (19W) 8000 Series Aluminum Neutral Conductor	--	--	--	0.488	0.498	0.503
B-1: Insulation Extruded Crosslinked Polyethylene (XLPE)	0.072	0.080	--	--	0.663	--
C: Plexed Assembly	--	--	--	--	1.429	--
Triplexed Cable Weight (Nominal): 821 lb/kft *						

* - Nominal Values are Subject to Manufacturing Tolerances

Customer:	SEATTLE CITY LIGHT	**Customer P/N:** 601011	**EA/PC Number:** 601011
Specification / Standard:	UL 44 & E-1.1/NGE-71	**Prepared By:** Ndabeni, Ndaba	**Date:** 1/18/2011

This document was prepared for a specific purpose and the recipient, by accepting this information, assumes custody and control and agrees to take reasonable precautions that (a) this document will not be copied or reproduced, in whole or in part, or its contents revealed in any manner to any person, except to meet the specific purpose for which the document was delivered, and (b) that any features of this document will not be incorporated into any other projects without the express written permission of an officer of General Cable Corporation. This information has been calculated based on known formulae. The values are believed to be accurate and concise. Although they are mathematically derived, normal dimensional tolerances in actual cable construction and variations in the installation conditions may lead to differences between the indicated values and actual measured values.

General Cable

BICC BRAND

Electrical Characteristics

[SCL Stock Number 601011]

Cable Description:	**(Triplex) 2-4/0 AWG XLPE-Insulated Phase, 1-4/0 AWG XLPE-Insulated Neutral**

Input Parameters:

Phase Operating Temperature:	90 °C	**Voltage (line to ground):**	346 V
Neutral Operating Temperature*:	75 °C	**Frequency:**	60 hz
Dielectric Constant:	2.55		
Earth Resistivity:	100 ohm-m		
Power Factor:	0.95		

*Used in Impedance Calculations Only

Conductor Resistance:

Rdc @:	20 °C	0.0819 Ω/kft	0.2686 Ω/km
Rac @:	25 °C	0.0836 Ω/kft	0.2745 Ω/km
	75 °C	0.1003 Ω/kft	0.3290 Ω/km
	90 °C	0.1053 Ω/kft	0.3454 Ω/km

Neutral Resistance:

Rdc @:	20 °C	0.0819 Ω/kft	0.2686 Ω/km
Rac @:	25 °C	0.0836 Ω/kft	0.2745 Ω/km
	75 °C	0.1003 Ω/kft	0.3290 Ω/km

Capacitance/ Capacitive Reactance:

Capacitance:	0.151 µF/kft	0.496 µF/km
Capacitive Reactance:	17531 Ω-kft	57518 Ω-km

Inductance/Impedance

Inductive Reactance:	0.029 Ω/kft	0.095 Ω/km
Inductance (w/ Partial Earth Return):	0.211 Ω/kft	0.693 Ω/km
Mutual Reactance:	0.086 Ω/kft	0.282 Ω/km
Impedance @ 25 °C:	0.088 Ω/kft	0.290 Ω/km

3-Phase Reactance/Impedance:

	Real	Imag.	Magnitude	Real	Imag.	Magnitude
Pos. & Neg. Seq. Impedance (3-Phase)	0.105	0.029	0.109 Ω/kft	0.345	0.095	0.358 Ω/km
Zero Seq. Impedance (3 Phase, 3 Wire - Earth only):	0.159	0.775	0.792 Ω/kft	0.523	2.544	2.598 Ω/km
Zero Seq. Impedance (3 Phase, 4 wire, Earth & Ground):	0.309	0.202	0.369 Ω/kft	1.013	0.662	1.211 Ω/km

Customer:	SEATTLE CITY LIGHT	**Customer P/N:** 601011	**EA/PC Number:** 601011
Specification / Standard:	UL 44 & E-1.1/NGE-71	**Prepared by:** Ndabeni, Ndaba	**Date:** 1/18/2011

This document was prepared for a specific purpose and the recipient, by accepting this information, assumes custody and control and agrees to take reasonable precautions that (a) this document will not be copied or reproduced, in whole or in part, or its contents revealed in any manner to any person, except to meet the specific purpose for which the document was delivered, and (b) that any features of this document will not be incorporated into any other projects without the express written permission of an officer of General Cable Corporation. This information has been calculated based on known formulae. The values are believed to be accurate and concise. Although they are mathematically derived, normal dimensional tolerances in actual cable construction and variations in the installation conditions may lead to differences between the indicated values and actual measured values.

General Cable

BICC BRAND

Drawing / Data Sheet

[SCL Stock Number 601014]

Triplexed Cable, 600V (UL 44 Type RHH/RHW-2 & UL 854 Type USE-2)

Representative drawing not to scale

Component Description	Thickness (inches) Min.	Min. Avg.	Max.	Diameter (inches) Min.	Nom.*	Max.
A: Phase Conductor 350 KCMIL Compressed (37W) 8000 Series Aluminum Phase Conductor	--	--	--	0.648	0.661	0.668
A-1: Insulation Extruded Crosslinked Polyethylene (XLPE)	0.086	0.095	--	--	0.856	--
B: Neutral Conductor 350 KCMIL Compressed (37W) 8000 Series Aluminum Neutral Conductor	--	--	--	0.648	0.661	0.668
B-1: Insulation Extruded Crosslinked Polyethylene (XLPE)	0.086	0.095	--	--	0.856	--
C: Plexed Assembly	--	--	--	--	1.845	--

Triplexed Cable Weight (Nominal): 1328 lb/kft *

* - Nominal Values are Subject to Manufacturing Tolerances

Customer:	SEATTLE CITY LIGHT	**Customer P/N:** 601014	**EA/PC Number:** 601014
Specification / Standard:	UL 44 & E6-1.1/NGE-71	**Prepared By:** Ndabeni, Ndaba	**Date:** 1/18/2011

This document was prepared for a specific purpose and the recipient, by accepting this information, assumes custody and control and agrees to take reasonable precautions that (a) this document will not be copied or reproduced, in whole or in part, or its contents revealed in any manner to any person, except to meet the specific purpose for which the document was delivered, and (b) that any features of this document will not be incorporated into any other projects without the express written permission of an officer of General Cable Corporation. This information has been calculated based on known formulae. The values are believed to be accurate and concise. Although they are mathematically derived, normal dimensional tolerances in actual cable construction and variations in the installation conditions may lead to differences between the indicated values and actual measured values.

General Cable

BICC BRAND

Electrical Characteristics

[SCL Stock Number 601014]

Cable Description:	**(Triplex) 2-350 KCMIL XLPE-Insulated Phase, 1-350 KCMIL XLPE-Insulated Neutral**
Input Parameters:	**Phase Operating Temperature:** 90 °C **Neutral Operating Temperature*:** 75 °C **Dielectric Constant:** 2.55 **Earth Resistivity:** 100 ohm-m **Power Factor:** 0.95 **Voltage (line to ground):** 346 V **Frequency:** 60 hz *Used in Impedance Calculations Only
Conductor Resistance:	**Rdc @:** 20 °C 0.0495 Ω/kft 0.1624 Ω/km **Rac @:** 25 °C 0.0506 Ω/kft 0.1661 Ω/km 75 °C 0.0611 Ω/kft 0.2003 Ω/km 90 °C 0.0641 Ω/kft 0.2104 Ω/km
Neutral Resistance:	**Rdc @:** 20 °C 0.0495 Ω/kft 0.1624 Ω/km **Rac @:** 25 °C 0.0506 Ω/kft 0.1661 Ω/km 75 °C 0.0611 Ω/kft 0.2003 Ω/km
Capacitance/ Capacitive Reactance:	**Capacitance:** 0.167 µF/kft 0.550 µF/km **Capacitive Reactance:** 15836 Ω-kft 51959 Ω-km
Inductance/Impedance	**Inductive Reactance:** 0.028 Ω/kft 0.092 Ω/km **Inductance (w/ Partial Earth Return):** 0.210 Ω/kft 0.690 Ω/km **Mutual Reactance:** 0.084 Ω/kft 0.274 Ω/km **Impedance @ 25 °C:** 0.058 Ω/kft 0.190 Ω/km

3-Phase Reactance/Impedance:

	Real	Imag.	Magnitude	Real	Imag.	Magnitude
Pos. & Neg. Seq. Impedance (3-Phase)	0.064	0.028	0.070 Ω/kft	0.210	0.092	0.230 Ω/km
Zero Seq. Impedance (3 Phase, 3 Wire - Earth only):	0.118	0.757	0.766 Ω/kft	0.388	2.483	2.514 Ω/km
Zero Seq. Impedance (3 Phase, 4 wire, Earth & Ground):	0.198	0.158	0.254 Ω/kft	0.650	0.519	0.832 Ω/km

Customer:	SEATTLE CITY LIGHT	**Customer P/N:** 601014	**EA/PC Number:** 601014
Specification / Standard:	UL 44 & E6-1.1/NGE-71	**Prepared by:** Ndabeni, Ndaba	**Date:** 1/18/2011

This document was prepared for a specific purpose and the recipient, by accepting this information, assumes custody and control and agrees to take reasonable precautions that (a) this document will not be copied or reproduced, in whole or in part, or its contents revealed in any manner to any person, except to meet the specific purpose for which the document was delivered, and (b) that any features of this document will not be incorporated into any other projects without the express written permission of an officer of General Cable Corporation. This information has been calculated based on known formulae. The values are believed to be accurate and concise. Although they are mathematically derived, normal dimensional tolerances in actual cable construction and variations in the installation conditions may lead to differences between the indicated values and actual measured values.

General Cable

BICC BRAND

Drawing / Data Sheet

[SCL Stock Number 601015]

Triplexed Cable, 600V (UL 44 Type RHH/RHW-2 & UL 854 Type USE-2)

Representative drawing not to scale

Component Description	Thickness (inches) Min.	Min. Avg.	Max.	Diameter (inches) Min.	Nom.*	Max.
A: Phase Conductor 500 KCMIL Compressed (37W) 8000 Series Aluminum Phase Conductor	--	--	--	0.773	0.789	0.797
A-1: Insulation Extruded Crosslinked Polyethylene (XLPE)	0.086	0.095	--	--	0.984	--
B: Neutral Conductor 500 KCMIL Compressed (37W) 8000 Series Aluminum Neutral Conductor	--	--	--	0.773	0.789	0.797
B-1: Insulation Extruded Crosslinked Polyethylene (XLPE)	0.086	0.095	--	--	0.984	--
C: Plexed Assembly	--	--	--	--	2.121	--
Triplexed Cable Weight (Nominal): 1818 lb/kft *						

* - Nominal Values are Subject to Manufacturing Tolerances

Customer:	SEATTLE CITY LIGHT	**Customer P/N:** 601015	**EA/PC Number:** 601015
Specification / Standard:	UL 44 & E6-1.1/NGE-71	**Prepared By:** Ndabeni, Ndaba	**Date:** 1/18/2011

This document was prepared for a specific purpose and the recipient, by accepting this information, assumes custody and control and agrees to take reasonable precautions that (a) this document will not be copied or reproduced, in whole or in part, or its contents revealed in any manner to any person, except to meet the specific purpose for which the document was delivered, and (b) that any features of this document will not be incorporated into any other projects without the express written permission of an officer of General Cable Corporation. This information has been calculated based on known formulae. The values are believed to be accurate and concise. Although they are mathematically derived, normal dimensional tolerances in actual cable construction and variations in the installation conditions may lead to differences between the indicated values and actual measured values.

General Cable

BICC BRAND

Electrical Characteristics

[SCL Stock Number 601015]

Cable Description:	**(Triplex) 2-500 KCMIL XLPE-Insulated Phase, 1-500 KCMIL XLPE-Insulated Neutral**
Input Parameters:	**Phase Operating Temperature:** 90 °C **Neutral Operating Temperature*:** 75 °C **Dielectric Constant:** 2.55 **Earth Resistivity:** 100 ohm-m **Power Factor:** 0.95 **Voltage (line to ground):** 346 V **Frequency:** 60 hz *Used in Impedance Calculations Only
Conductor Resistance:	**Rdc @:** 20 °C 0.0346 Ω/kft 0.1137 Ω/km **Rac @:** 25 °C 0.0358 Ω/kft 0.1175 Ω/km 75 °C 0.0431 Ω/kft 0.1415 Ω/km 90 °C 0.0445 Ω/kft 0.1461 Ω/km
Neutral Resistance:	**Rdc @:** 20 °C 0.0346 Ω/kft 0.1137 Ω/km **Rac @:** 25 °C 0.0358 Ω/kft 0.1175 Ω/km 75 °C 0.0431 Ω/kft 0.1415 Ω/km
Capacitance/ Capacitive Reactance:	**Capacitance:** 0.196 µF/kft 0.643 µF/km **Capacitive Reactance:** 13530 Ω-kft 44390 Ω-km
Inductance/Impedance	**Inductive Reactance:** 0.027 Ω/kft 0.089 Ω/km **Inductance (w/ Partial Earth Return):** 0.209 Ω/kft 0.687 Ω/km **Mutual Reactance:** 0.082 Ω/kft 0.270 Ω/km **Impedance @ 25 °C:** 0.045 Ω/kft 0.147 Ω/km

3-Phase Reactance/Impedance:

	Real	Imag.	Magnitude	Real	Imag.	Magnitude
Pos. & Neg. Seq. Impedance (3-Phase)	0.045	0.027	0.052 Ω/kft	0.146	0.089	0.171 Ω/km
Zero Seq. Impedance (3 Phase, 3 Wire - Earth only):	0.099	0.746	0.753 Ω/kft	0.324	2.449	2.470 Ω/km
Zero Seq. Impedance (3 Phase, 4 wire, Earth & Ground):	0.142	0.142	0.201 Ω/kft	0.466	0.466	0.659 Ω/km

Customer:	SEATTLE CITY LIGHT	**Customer P/N:** 601015	**EA/PC Number:** 601015
Specification / Standard:	UL 44 & E6-1.1/NGE-71	**Prepared by:** Ndabeni, Ndaba	**Date:** 1/18/2011

This document was prepared for a specific purpose and the recipient, by accepting this information, assumes custody and control and agrees to take reasonable precautions that (a) this document will not be copied or reproduced, in whole or in part, or its contents revealed in any manner to any person, except to meet the specific purpose for which the document was delivered, and (b) that any features of this document will not be incorporated into any other projects without the express written permission of an officer of General Cable Corporation. This information has been calculated based on known formulae. The values are believed to be accurate and concise. Although they are mathematically derived, normal dimensional tolerances in actual cable construction and variations in the installation conditions may lead to differences between the indicated values and actual measured values.

Utility Engineering Center
Tel: 859-572-8000

Document No: LVUG Datasheets
www.generalcable.com

General Cable

BICC BRAND

Drawing / Data Sheet

[SCL Stock Number 601016]

Triplexed Cable, 600V (UL 44 Type RHH/RHW-2 & UL 854 Type USE-2)

Representative drawing not to scale

Component Description	Thickness (inches) Min.	Min. Avg.	Max.	Diameter (inches) Min.	Nom.*	Max.
A: Phase Conductor 750 KCMIL Compressed (61W) 8000 Series Aluminum Phase Conductor	--	--	--	0.949	0.968	0.978
A-1: Insulation Extruded Crosslinked Polyethylene (XLPE)	0.099	0.110	--	--	1.193	--
B: Neutral Conductor 750 KCMIL Compressed (61W) 8000 Series Aluminum Neutral Conductor	--	--	--	0.949	0.968	0.978
B-1: Insulation Extruded Crosslinked Polyethylene (XLPE)	0.099	0.110	--	--	1.193	--
C: Plexed Assembly	--	--	--	--	2.571	--

Triplexed Cable Weight (Nominal): 2680 lb/kft *

* - Nominal Values are Subject to Manufacturing Tolerances

Customer:	SEATTLE CITY LIGHT	**Customer P/N:** 601016	**EA/PC Number:** 601016
Specification / Standard:	UL 44 & E6-1.1/NGE-71	**Prepared By:** Ndabeni, Ndaba	**Date:** 1/18/2011

This document was prepared for a specific purpose and the recipient, by accepting this information, assumes custody and control and agrees to take reasonable precautions that (a) this document will not be copied or reproduced, in whole or in part, or its contents revealed in any manner to any person, except to meet the specific purpose for which the document was delivered, and (b) that any features of this document will not be incorporated into any other projects without the express written permission of an officer of General Cable Corporation. This information has been calculated based on known formulae. The values are believed to be accurate and concise. Although they are mathematically derived, normal dimensional tolerances in actual cable construction and variations in the installation conditions may lead to differences between the indicated values and actual measured values.

General Cable

BICC BRAND

Electrical Characteristics

[SCL Stock Number 601016]

Cable Description:	**(Triplex) 2-750 KCMIL XLPE-Insulated Phase, 1-750 KCMIL XLPE-Insulated Neutral**

Input Parameters:

Phase Operating Temperature:	90 °C	**Voltage (line to ground):**	346 V
Neutral Operating Temperature*:	75 °C	**Frequency:**	60 hz
Dielectric Constant:	2.55		
Earth Resistivity:	100 ohm-m		
Power Factor:	0.95		

*Used in Impedance Calculations Only

Conductor Resistance:

Rdc @:	20 °C	0.0231 Ω/kft	0.0758 Ω/km
Rac @:	25 °C	0.0242 Ω/kft	0.0794 Ω/km
	75 °C	0.0293 Ω/kft	0.0962 Ω/km
	90 °C	0.0309 Ω/kft	0.1013 Ω/km

Neutral Resistance:

Rdc @:	20 °C	0.0231 Ω/kft	0.0758 Ω/km
Rac @:	25 °C	0.0242 Ω/kft	0.0794 Ω/km
	75 °C	0.0293 Ω/kft	0.0962 Ω/km

Capacitance/ Capacitive Reactance:

Capacitance:	0.207 μF/kft	0.680 μF/km
Capacitive Reactance:	12803 Ω-kft	42006 Ω-km

Inductance/Impedance

Inductive Reactance:	0.027 Ω/kft	0.088 Ω/km
Inductance (w/ Partial Earth Return):	0.209 Ω/kft	0.686 Ω/km
Mutual Reactance:	0.081 Ω/kft	0.264 Ω/km
Impedance @ 25 °C:	0.036 Ω/kft	0.118 Ω/km

3-Phase Reactance/Impedance:

	Real	Imag.	Magnitude	Real	Imag.	Magnitude
Pos. & Neg. Seq. Impedance (3-Phase)	0.031	0.027	0.041 Ω/kft	0.101	0.088	0.134 Ω/km
Zero Seq. Impedance (3 Phase, 3 Wire - Earth only):	0.085	0.733	0.738 Ω/kft	0.279	2.404	2.420 Ω/km
Zero Seq. Impedance (3 Phase, 4 wire, Earth & Ground):	0.098	0.133	0.165 Ω/kft	0.323	0.436	0.543 Ω/km

Customer:	SEATTLE CITY LIGHT	**Customer P/N:** 601016	**EA/PC Number:** 601016
Specification / Standard:	UL 44 & E6-1.1/NGE-71	**Prepared by:** Ndabeni, Ndaba	**Date:** 1/18/2011

This document was prepared for a specific purpose and the recipient, by accepting this information, assumes custody and control and agrees to take reasonable precautions that (a) this document will not be copied or reproduced, in whole or in part, or its contents revealed in any manner to any person, except to meet the specific purpose for which the document was delivered, and (b) that any features of this document will not be incorporated into any other projects without the express written permission of an officer of General Cable Corporation. This information has been calculated based on known formulae. The values are believed to be accurate and concise. Although they are mathematically derived, normal dimensional tolerances in actual cable construction and variations in the installation conditions may lead to differences between the indicated values and actual measured values.

General Cable

BICC BRAND

Drawing / Data Sheet

[SCL Stock Number 601018]

Triplexed Cable, 600V (UL 44 Type XHHW-2)

Representative drawing not to scale

Component Description	Thickness (inches) Min.	Min. Avg.	Max.	Diameter (inches) Min.	Nom.*	Max.
A: Phase Conductor 750 KCMIL Compressed (61W) 8000 Series Aluminum Phase Conductor	--	--	--	0.949	0.968	0.978
A-1: Insulation Extruded Crosslinked Polyethylene (XLPE)	0.072	0.080	--	--	1.133	--
B: Neutral Conductor 750 KCMIL Compressed (61W) 8000 Series Aluminum Neutral Conductor	--	--	--	0.949	0.968	0.978
B-1: Insulation Extruded Crosslinked Polyethylene (XLPE)	0.072	0.080	--	--	1.133	--
C: Plexed Assembly	--	--	--	--	2.442	--

Triplexed Cable Weight (Nominal): 2531 lb/kft *

* - Nominal Values are Subject to Manufacturing Tolerances

Customer:	SEATTLE CITY LIGHT	**Customer P/N:** 601018	**EA/PC Number:** 601018
Specification / Standard:	UL 44 & E6-1.1/NGE-71	**Prepared By:** Ndabeni, Ndaba	**Date:** 1/18/2011

This document was prepared for a specific purpose and the recipient, by accepting this information, assumes custody and control and agrees to take reasonable precautions that (a) this document will not be copied or reproduced, in whole or in part, or its contents revealed in any manner to any person, except to meet the specific purpose for which the document was delivered, and (b) that any features of this document will not be incorporated into any other projects without the express written permission of an officer of General Cable Corporation. This information has been calculated based on known formulae. The values are believed to be accurate and concise. Although they are mathematically derived, normal dimensional tolerances in actual cable construction and variations in the installation conditions may lead to differences between the indicated values and actual measured values.

General Cable

BICC BRAND

[SCL Stock Number 601018]

Electrical Characteristics

Cable Description:	**(Triplex) 2-750 KCMIL XLPE-Insulated Phase, 1-750 KCMIL XLPE-Insulated Neutral**

Input Parameters:

Phase Operating Temperature:	90 °C	**Voltage (line to ground):**	346 V
Neutral Operating Temperature*:	75 °C	**Frequency:**	60 hz
Dielectric Constant:	2.55		
Earth Resistivity:	100 ohm-m		
Power Factor:	0.95		

*Used in Impedance Calculations Only

Conductor Resistance:

Rdc @:	20 °C	0.0231 Ω/kft	0.0758 Ω/km
Rac @:	25 °C	0.0242 Ω/kft	0.0794 Ω/km
	75 °C	0.0293 Ω/kft	0.0962 Ω/km
	90 °C	0.0309 Ω/kft	0.1013 Ω/km

Neutral Resistance:

Rdc @:	20 °C	0.0231 Ω/kft	0.0758 Ω/km
Rac @:	25 °C	0.0242 Ω/kft	0.0794 Ω/km
	75 °C	0.0293 Ω/kft	0.0962 Ω/km

Capacitance/ Capacitive Reactance:

Capacitance:	0.275 μF/kft	0.903 μF/km
Capacitive Reactance:	9642 Ω-kft	31634 Ω-km

Inductance/Impedance

Inductive Reactance:	0.025 Ω/kft	0.084 Ω/km
Inductance (w/ Partial Earth Return):	0.208 Ω/kft	0.682 Ω/km
Mutual Reactance:	0.081 Ω/kft	0.266 Ω/km
Impedance @ 25 °C:	0.035 Ω/kft	0.115 Ω/km

3-Phase Reactance/Impedance:

	Real	Imag.	Magnitude	Real	Imag.	Magnitude
Pos. & Neg. Seq. Impedance (3-Phase)	0.031	0.025	0.040 Ω/kft	0.101	0.084	0.131 Ω/km
Zero Seq. Impedance (3 Phase, 3 Wire - Earth only):	0.085	0.735	0.740 Ω/kft	0.279	2.412	2.428 Ω/km
Zero Seq. Impedance (3 Phase, 4 wire, Earth & Ground):	0.099	0.129	0.163 Ω/kft	0.325	0.424	0.534 Ω/km

Customer:	SEATTLE CITY LIGHT	**Customer P/N:** 601018	**EA/PC Number:** 601018
Specification / Standard:	UL 44 & E6-1.1/NGE-71	**Prepared by:** Ndabeni, Ndaba	**Date:** 1/18/2011

This document was prepared for a specific purpose and the recipient, by accepting this information, assumes custody and control and agrees to take reasonable precautions that (a) this document will not be copied or reproduced, in whole or in part, or its contents revealed in any manner to any person, except to meet the specific purpose for which the document was delivered, and (b) that any features of this document will not be incorporated into any other projects without the express written permission of an officer of General Cable Corporation. This information has been calculated based on known formulae. The values are believed to be accurate and concise. Although they are mathematically derived, normal dimensional tolerances in actual cable construction and variations in the installation conditions may lead to differences between the indicated values and actual measured values.

Utility Engineering Center
Tel: 859-572-8000

General Cable

BICC BRAND

Drawing / Data Sheet

[SCL Stock Number 603730]

Triplexed Cable, 600V (UL 44 Type RHH/RHW-2 & UL 854 Type USE-2)

Representative drawing not to scale

Component Description	Thickness (inches) Min.	Min. Avg.	Max.	Diameter (inches) Min.	Nom.*	Max.
A: Phase Conductor #2 AWG Compressed (7W) Copper Phase Conductor	--	--	--	0.277	0.283	0.286
A-1: Insulation Extruded Crosslinked Polyethylene (XLPE)	0.054	0.060	--	--	0.408	--
B: Neutral Conductor #2 AWG Compressed (7W) Copper Neutral Conductor	--	--	--	0.277	0.283	0.286
B-1: Insulation Extruded Crosslinked Polyethylene (XLPE)	0.054	0.060	--	--	0.408	--
C: Plexed Assembly	--	--	--	--	0.879	--
Triplexed Cable Weight (Nominal): 722 lb/kft *						

* - Nominal Values are Subject to Manufacturing Tolerances

Customer:	SEATTLE CITY LIGHT	**Customer P/N:** 613730	**EA/PC Number:** 613730
Specification / Standard:	UL 44 & E6-1.1/NGE-71	**Prepared By:** Ndabeni, Ndaba	**Date:** 1/18/2011

This document was prepared for a specific purpose and the recipient, by accepting this information, assumes custody and control and agrees to take reasonable precautions that (a) this document will not be copied or reproduced, in whole or in part, or its contents revealed in any manner to any person, except to meet the specific purpose for which the document was delivered, and (b) that any features of this document will not be incorporated into any other projects without the express written permission of an officer of General Cable Corporation. This information has been calculated based on known formulae. The values are believed to be accurate and concise. Although they are mathematically derived, normal dimensional tolerances in actual cable construction and variations in the installation conditions may lead to differences between the indicated values and actual measured values.

General Cable

BICC BRAND

Electrical Characteristics

[SCL Stock Number 603730]

Cable Description:	**(Triplex) 2-#2 AWG XLPE-Insulated Phase, 1-#2 AWG XLPE-Insulated Neutral**
Input Parameters:	**Phase Operating Temperature:** 90 °C **Neutral Operating Temperature*:** 75 °C **Dielectric Constant:** 2.55 **Earth Resistivity:** 100 ohm-m **Power Factor:** 0.95 **Voltage (line to ground):** 346 V **Frequency:** 60 hz *Used in Impedance Calculations Only
Conductor Resistance:	**Rdc @:** 20 °C 0.1597 Ω/kft 0.5241 Ω/km **Rac @:** 25 °C 0.1629 Ω/kft 0.5346 Ω/km 75 °C 0.1944 Ω/kft 0.6378 Ω/km 90 °C 0.2038 Ω/kft 0.6687 Ω/km
Neutral Resistance:	**Rdc @:** 20 °C 0.1597 Ω/kft 0.5241 Ω/km **Rac @:** 25 °C 0.1629 Ω/kft 0.5346 Ω/km 75 °C 0.1944 Ω/kft 0.6378 Ω/km
Capacitance/ Capacitive Reactance:	**Capacitance:** 0.118 µF/kft 0.388 µF/km **Capacitive Reactance:** 22410 Ω-kft 73526 Ω-km
Inductance/Impedance	**Inductive Reactance:** 0.032 Ω/kft 0.104 Ω/km **Inductance (w/ Partial Earth Return):** 0.214 Ω/kft 0.702 Ω/km **Mutual Reactance:** 0.090 Ω/kft 0.296 Ω/km **Impedance @ 25 °C:** 0.166 Ω/kft 0.545 Ω/km

3-Phase Reactance/Impedance:

	Real	Imag.	Magnitude	Real	Imag.	Magnitude
Pos. & Neg. Seq. Impedance (3-Phase)	0.204	0.032	0.206 Ω/kft	0.669	0.104	0.677 Ω/km
Zero Seq. Impedance (3 Phase, 3 Wire - Earth only):	0.258	0.812	0.852 Ω/kft	0.847	2.663	2.795 Ω/km
Zero Seq. Impedance (3 Phase, 4 wire, Earth & Ground):	0.512	0.333	0.611 Ω/kft	1.680	1.092	2.004 Ω/km

Customer:	SEATTLE CITY LIGHT	**Customer P/N:** 613730	**EA/PC Number:** 613730
Specification / Standard:	UL 44 & E6-1.1/NGE-71	**Prepared by:** Ndabeni, Ndaba	**Date:** 1/18/2011

This document was prepared for a specific purpose and the recipient, by accepting this information, assumes custody and control and agrees to take reasonable precautions that (a) this document will not be copied or reproduced, in whole or in part, or its contents revealed in any manner to any person, except to meet the specific purpose for which the document was delivered, and (b) that any features of this document will not be incorporated into any other projects without the express written permission of an officer of General Cable Corporation. This information has been calculated based on known formulae. The values are believed to be accurate and concise. Although they are mathematically derived, normal dimensional tolerances in actual cable construction and variations in the installation conditions may lead to differences between the indicated values and actual measured values.

General Cable

BICC BRAND

Drawing / Data Sheet

[SCL Stock Number 603732]

Triplexed Cable, 600V (UL 44 Type RHH/RHW-2 & UL 854 Type USE-2)

Representative drawing not to scale

Component Description	Thickness (inches) Min.	Min. Avg.	Max.	Diameter (inches) Min.	Nom.*	Max.
A: Phase Conductor 1/0 AWG Compressed (19W) Copper Phase Conductor	--	--	--	0.345	0.352	0.356
A-1: Insulation Extruded Crosslinked Polyethylene (XLPE)	0.072	0.080	--	--	0.517	--
B: Neutral Conductor 1/0 AWG Compressed (19W) Copper Neutral Conductor	--	--	--	0.345	0.352	0.356
B-1: Insulation Extruded Crosslinked Polyethylene (XLPE)	0.072	0.080	--	--	0.517	--
C: Plexed Assembly	--	--	--	--	1.114	--
Triplexed Cable Weight (Nominal): 1143 lb/kft *						

* - Nominal Values are Subject to Manufacturing Tolerances

Customer:	SEATTLE CITY LIGHT	**Customer P/N:** 613732	**EA/PC Number:** 613732
Specification / Standard:	UL 44 & E6-1.1/NGE-71	**Prepared By:** Ndabeni, Ndaba	**Date:** 1/18/2011

This document was prepared for a specific purpose and the recipient, by accepting this information, assumes custody and control and agrees to take reasonable precautions that (a) this document will not be copied or reproduced, in whole or in part, or its contents revealed in any manner to any person, except to meet the specific purpose for which the document was delivered, and (b) that any features of this document will not be incorporated into any other projects without the express written permission of an officer of General Cable Corporation. This information has been calculated based on known formulae. The values are believed to be accurate and concise. Although they are mathematically derived, normal dimensional tolerances in actual cable construction and variations in the installation conditions may lead to differences between the indicated values and actual measured values.

General Cable

BICC BRAND

Electrical Characteristics

[SCL Stock Number 603732]

Cable Description:	**(Triplex) 2-1/0 AWG XLPE-Insulated Phase, 1-1/0 AWG XLPE-Insulated Neutral**
Input Parameters:	**Phase Operating Temperature:** 90 °C **Neutral Operating Temperature*:** 75 °C **Dielectric Constant:** 2.55 **Earth Resistivity:** 100 ohm-m **Power Factor:** 0.95 **Voltage (line to ground):** 346 V **Frequency:** 60 hz *Used in Impedance Calculations Only
Conductor Resistance:	**Rdc @:** 20 °C 0.1004 Ω/kft 0.3293 Ω/km **Rac @:** 25 °C 0.1025 Ω/kft 0.3362 Ω/km 75 °C 0.1223 Ω/kft 0.4012 Ω/km 90 °C 0.1282 Ω/kft 0.4207 Ω/km
Neutral Resistance:	**Rdc @:** 20 °C 0.1004 Ω/kft 0.3293 Ω/km **Rac @:** 25 °C 0.1025 Ω/kft 0.3362 Ω/km 75 °C 0.1223 Ω/kft 0.4012 Ω/km
Capacitance/ Capacitive Reactance:	**Capacitance:** 0.113 µF/kft 0.370 µF/km **Capacitive Reactance:** 23549 Ω-kft 77263 Ω-km
Inductance/Impedance	**Inductive Reactance:** 0.031 Ω/kft 0.102 Ω/km **Inductance (w/ Partial Earth Return):** 0.213 Ω/kft 0.700 Ω/km **Mutual Reactance:** 0.088 Ω/kft 0.289 Ω/km **Impedance @ 25 °C:** 0.107 Ω/kft 0.351 Ω/km

3-Phase Reactance/Impedance:

	Real	Imag.	Magnitude	Real	Imag.	Magnitude
Pos. & Neg. Seq. Impedance (3-Phase)	0.128	0.031	0.132 Ω/kft	0.421	0.102	0.433 Ω/km
Zero Seq. Impedance (3 Phase, 3 Wire - Earth only):	0.182	0.795	0.816 Ω/kft	0.599	2.608	2.676 Ω/km
Zero Seq. Impedance (3 Phase, 4 wire, Earth & Ground):	0.363	0.235	0.432 Ω/kft	1.191	0.770	1.418 Ω/km

Customer:	SEATTLE CITY LIGHT	**Customer P/N:** 613732	**EA/PC Number:** 613732
Specification / Standard:	UL 44 & E6-1.1/NGE-71	**Prepared by:** Ndabeni, Ndaba	**Date:** 1/18/2011

This document was prepared for a specific purpose and the recipient, by accepting this information, assumes custody and control and agrees to take reasonable precautions that (a) this document will not be copied or reproduced, in whole or in part, or its contents revealed in any manner to any person, except to meet the specific purpose for which the document was delivered, and (b) that any features of this document will not be incorporated into any other projects without the express written permission of an officer of General Cable Corporation. This information has been calculated based on known formulae. The values are believed to be accurate and concise. Although they are mathematically derived, normal dimensional tolerances in actual cable construction and variations in the installation conditions may lead to differences between the indicated values and actual measured values.

General Cable

BICC BRAND

Drawing / Data Sheet

[SCL Stock Number 603733]

Triplexed Cable, 600V (UL 44 Type RHH/RHW-2 & UL 854 Type USE-2)

Representative drawing not to scale

Component Description	Thickness (inches) Min.	Min. Avg.	Max.	Diameter (inches) Min.	Nom.*	Max.
A: Phase Conductor 2/0 AWG Compressed (19W) Copper Phase Conductor	--	--	--	0.387	0.395	0.399
A-1: Insulation Extruded Crosslinked Polyethylene (XLPE)	0.072	0.080	--	--	0.560	--
B: Neutral Conductor 2/0 AWG Compressed (19W) Copper Neutral Conductor	--	--	--	0.387	0.395	0.399
B-1: Insulation Extruded Crosslinked Polyethylene (XLPE)	0.072	0.080	--	--	0.560	--
C: Plexed Assembly	--	--	--	--	1.207	--
Triplexed Cable Weight (Nominal): 1416 lb/kft *						

* - Nominal Values are Subject to Manufacturing Tolerances

Customer:	SEATTLE CITY LIGHT	**Customer P/N:** 613733	**EA/PC Number:** 613733
Specification / Standard:	UL 44 & E6.1.1/NGE-71	**Prepared By:** Ndabeni, Ndaba	**Date:** 1/18/2011

This document was prepared for a specific purpose and the recipient, by accepting this information, assumes custody and control and agrees to take reasonable precautions that (a) this document will not be copied or reproduced, in whole or in part, or its contents revealed in any manner to any person, except to meet the specific purpose for which the document was delivered, and (b) that any features of this document will not be incorporated into any other projects without the express written permission of an officer of General Cable Corporation. This information has been calculated based on known formulae. The values are believed to be accurate and concise. Although they are mathematically derived, normal dimensional tolerances in actual cable construction and variations in the installation conditions may lead to differences between the indicated values and actual measured values.

General Cable

BICC BRAND

Electrical Characteristics

[SCL Stock Number 603733]

Cable Description:	**(Triplex) 2-2/0 AWG XLPE-Insulated Phase, 1-2/0 AWG XLPE-Insulated Neutral**

Input Parameters:

Phase Operating Temperature:	90 °C	**Voltage (line to ground):**	346 V
Neutral Operating Temperature*:	75 °C	**Frequency:**	60 hz
Dielectric Constant:	2.55		
Earth Resistivity:	100 ohm-m		
Power Factor:	0.95		

*Used in Impedance Calculations Only

Conductor Resistance:

Rdc @:	20 °C	0.0796 Ω/kft	0.2613 Ω/km
Rac @:	25 °C	0.0813 Ω/kft	0.2669 Ω/km
	75 °C	0.0971 Ω/kft	0.3186 Ω/km
	90 °C	0.1018 Ω/kft	0.3341 Ω/km

Neutral Resistance:

Rdc @:	20 °C	0.0796 Ω/kft	0.2613 Ω/km
Rac @:	25 °C	0.0813 Ω/kft	0.2669 Ω/km
	75 °C	0.0971 Ω/kft	0.3186 Ω/km

Capacitance/ Capacitive Reactance:

Capacitance:	0.124 µF/kft	0.407 µF/km
Capacitive Reactance:	21382 Ω-kft	70156 Ω-km

Inductance/Impedance

Inductive Reactance:	0.030 Ω/kft	0.099 Ω/km
Inductance (w/ Partial Earth Return):	0.213 Ω/kft	0.698 Ω/km
Mutual Reactance:	0.087 Ω/kft	0.287 Ω/km
Impedance @ 25 °C:	0.087 Ω/kft	0.285 Ω/km

3-Phase Reactance/Impedance:

	Real	Imag.	Magnitude	Real	Imag.	Magnitude
Pos. & Neg. Seq. Impedance (3-Phase)	0.102	0.030	0.106 Ω/kft	0.334	0.099	0.349 Ω/km
Zero Seq. Impedance (3 Phase, 3 Wire - Earth only):	0.156	0.789	0.804 Ω/kft	0.512	2.587	2.637 Ω/km
Zero Seq. Impedance (3 Phase, 4 wire, Earth & Ground):	0.300	0.202	0.362 Ω/kft	0.984	0.662	1.186 Ω/km

Customer:	SEATTLE CITY LIGHT	**Customer P/N:** 613733	**EA/PC Number:** 613733
Specification / Standard:	UL 44 & E6.1.1/NGE-71	**Prepared by:** Ndabeni, Ndaba	**Date:** 1/18/2011

This document was prepared for a specific purpose and the recipient, by accepting this information, assumes custody and control and agrees to take reasonable precautions that (a) this document will not be copied or reproduced, in whole or in part, or its contents revealed in any manner to any person, except to meet the specific purpose for which the document was delivered, and (b) that any features of this document will not be incorporated into any other projects without the express written permission of an officer of General Cable Corporation. This information has been calculated based on known formulae. The values are believed to be accurate and concise. Although they are mathematically derived, normal dimensional tolerances in actual cable construction and variations in the installation conditions may lead to differences between the indicated values and actual measured values.

General Cable

BICC BRAND

Drawing / Data Sheet

[SCL Stock Number 603734]

Triplexed Cable, 600V (UL 44 Type RHH/RHW-2 & UL 854 Type USE-2)

Representative drawing not to scale

Component Description	Thickness (inches) Min.	Min. Avg.	Max.	Diameter (inches) Min.	Nom.*	Max.
A: Phase Conductor 3/0 AWG Compressed (19W) Copper Phase Conductor	--	--	--	0.434	0.443	0.447
A-1: Insulation Extruded Crosslinked Polyethylene (XLPE)	0.072	0.080	--	--	0.608	--
B: Neutral Conductor 3/0 AWG Compressed (19W) Copper Neutral Conductor	--	--	--	0.434	0.443	0.447
B-1: Insulation Extruded Crosslinked Polyethylene (XLPE)	0.072	0.080	--	--	0.608	--
C: Plexed Assembly	--	--	--	--	1.310	--
Triplexed Cable Weight (Nominal): 1758 lb/kft *						

* - Nominal Values are Subject to Manufacturing Tolerances

Customer:	SEATTLE CITY LIGHT	**Customer P/N:** 613734	**EA/PC Number:** 613734
Specification / Standard:	UL 44 & E6-1.1/NGE-71	**Prepared By:** Ndabeni, Ndaba	**Date:** 1/18/2011

This document was prepared for a specific purpose and the recipient, by accepting this information, assumes custody and control and agrees to take reasonable precautions that (a) this document will not be copied or reproduced, in whole or in part, or its contents revealed in any manner to any person, except to meet the specific purpose for which the document was delivered, and (b) that any features of this document will not be incorporated into any other projects without the express written permission of an officer of General Cable Corporation. This information has been calculated based on known formulae. The values are believed to be accurate and concise. Although they are mathematically derived, normal dimensional tolerances in actual cable construction and variations in the installation conditions may lead to differences between the indicated values and actual measured values.

General Cable

BICC BRAND

Electrical Characteristics

[SCL Stock Number 603734]

Cable Description:	**(Triplex) 2-3/0 AWG XLPE-Insulated Phase, 1-3/0 AWG XLPE-Insulated Neutral**
Input Parameters:	**Phase Operating Temperature:** 90 °C **Neutral Operating Temperature*:** 75 °C **Dielectric Constant:** 2.55 **Earth Resistivity:** 100 ohm-m **Power Factor:** 0.95 **Voltage (line to ground):** 346 V **Frequency:** 60 hz *Used in Impedance Calculations Only
Conductor Resistance:	**Rdc @:** 20 °C 0.0632 Ω/kft 0.2073 Ω/km **Rac @:** 25 °C 0.0646 Ω/kft 0.2119 Ω/km 75 °C 0.0770 Ω/kft 0.2527 Ω/km 90 °C 0.0808 Ω/kft 0.2650 Ω/km
Neutral Resistance:	**Rdc @:** 20 °C 0.0632 Ω/kft 0.2073 Ω/km **Rac @:** 25 °C 0.0646 Ω/kft 0.2119 Ω/km 75 °C 0.0770 Ω/kft 0.2527 Ω/km
Capacitance/ Capacitive Reactance:	**Capacitance:** 0.137 μF/kft 0.449 μF/km **Capacitive Reactance:** 19395 Ω-kft 63634 Ω-km
Inductance/Impedance	**Inductive Reactance:** 0.030 Ω/kft 0.097 Ω/km **Inductance (w/ Partial Earth Return):** 0.212 Ω/kft 0.695 Ω/km **Mutual Reactance:** 0.087 Ω/kft 0.284 Ω/km **Impedance @ 25 °C:** 0.071 Ω/kft 0.233 Ω/km

3-Phase Reactance/Impedance:

	Real	Imag.	Magnitude	Real	Imag.	Magnitude
Pos. & Neg. Seq. Impedance (3-Phase)	0.081	0.030	0.086 Ω/kft	0.265	0.097	0.282 Ω/km
Zero Seq. Impedance (3 Phase, 3 Wire - Earth only):	0.135	0.782	0.794 Ω/kft	0.443	2.566	2.604 Ω/km
Zero Seq. Impedance (3 Phase, 4 wire, Earth & Ground):	0.245	0.178	0.303 Ω/kft	0.804	0.584	0.993 Ω/km

Customer:	SEATTLE CITY LIGHT	**Customer P/N:** 613734	**EA/PC Number:** 613734
Specification / Standard:	UL 44 & E6-1.1/NGE-71	**Prepared by:** Ndabeni, Ndaba	**Date:** 1/18/2011

This document was prepared for a specific purpose and the recipient, by accepting this information, assumes custody and control and agrees to take reasonable precautions that (a) this document will not be copied or reproduced, in whole or in part, or its contents revealed in any manner to any person, except to meet the specific purpose for which the document was delivered, and (b) that any features of this document will not be incorporated into any other projects without the express written permission of an officer of General Cable Corporation. This information has been calculated based on known formulae. The values are believed to be accurate and concise. Although they are mathematically derived, normal dimensional tolerances in actual cable construction and variations in the installation conditions may lead to differences between the indicated values and actual measured values.

Utility Engineering Center
Tel: 859-572-8000

General Cable

BICC BRAND

Drawing / Data Sheet

[SCL Stock Number 603735]

Triplexed Cable, 600V (UL 44 Type RHH/RHW-2 & UL 854 Type USE-2)

Representative drawing not to scale

Component Description	Thickness (inches) Min.	Min. Avg.	Max.	Diameter (inches) Min.	Nom.*	Max.
A: Phase Conductor 4/0 AWG Compressed (19W) Copper Phase Conductor	--	--	--	0.488	0.498	0.503
A-1: Insulation Extruded Crosslinked Polyethylene (XLPE)	0.072	0.080	--	--	0.663	--
B: Neutral Conductor 4/0 AWG Compressed (19W) Copper Neutral Conductor	--	--	--	0.488	0.498	0.503
B-1: Insulation Extruded Crosslinked Polyethylene (XLPE)	0.072	0.080	--	--	0.663	--
C: Plexed Assembly	--	--	--	--	1.429	--

Triplexed Cable Weight (Nominal): 2188 lb/kft *

* - Nominal Values are Subject to Manufacturing Tolerances

Customer:	SEATTLE CITY LIGHT	**Customer P/N:** 613735	**EA/PC Number:** 613735
Specification / Standard:	UL 44 & E6-1.1/NGE-71	**Prepared By:** Ndabeni, Ndaba	**Date:** 1/18/2011

This document was prepared for a specific purpose and the recipient, by accepting this information, assumes custody and control and agrees to take reasonable precautions that (a) this document will not be copied or reproduced, in whole or in part, or its contents revealed in any manner to any person, except to meet the specific purpose for which the document was delivered, and (b) that any features of this document will not be incorporated into any other projects without the express written permission of an officer of General Cable Corporation. This information has been calculated based on known formulae. The values are believed to be accurate and concise. Although they are mathematically derived, normal dimensional tolerances in actual cable construction and variations in the installation conditions may lead to differences between the indicated values and actual measured values.

General Cable

BICC BRAND

Electrical Characteristics

[SCL Stock Number 603735]

Cable Description:	**(Triplex) 2-4/0 AWG XLPE-Insulated Phase, 1-4/0 AWG XLPE-Insulated Neutral**

Input Parameters:

Phase Operating Temperature:	90 °C	**Voltage (line to ground):**	346 V
Neutral Operating Temperature*:	75 °C	**Frequency:**	60 hz
Dielectric Constant:	2.55		
Earth Resistivity:	100 ohm-m		
Power Factor:	0.95		

*Used in Impedance Calculations Only

Conductor Resistance:

Rdc @:	20 °C	0.0501 Ω/kft	0.1644 Ω/km
Rac @:	25 °C	0.0512 Ω/kft	0.1681 Ω/km
	75 °C	0.0615 Ω/kft	0.2017 Ω/km
	90 °C	0.0645 Ω/kft	0.2117 Ω/km

Neutral Resistance:

Rdc @:	20 °C	0.0501 Ω/kft	0.1644 Ω/km
Rac @:	25 °C	0.0512 Ω/kft	0.1681 Ω/km
	75 °C	0.0615 Ω/kft	0.2017 Ω/km

Capacitance/ Capacitive Reactance:

Capacitance:	0.151 μF/kft	0.496 μF/km
Capacitive Reactance:	17531 Ω-kft	57518 Ω-km

Inductance/Impedance

Inductive Reactance:	0.029 Ω/kft	0.095 Ω/km
Inductance (w/ Partial Earth Return):	0.211 Ω/kft	0.693 Ω/km
Mutual Reactance:	0.086 Ω/kft	0.282 Ω/km
Impedance @ 25 °C:	0.059 Ω/kft	0.193 Ω/km

3-Phase Reactance/Impedance:

	Real	Imag.	Magnitude	Real	Imag.	Magnitude
Pos. & Neg. Seq. Impedance (3-Phase)	0.065	0.029	0.071 Ω/kft	0.212	0.095	0.232 Ω/km
Zero Seq. Impedance (3 Phase, 3 Wire - Earth only):	0.119	0.775	0.785 Ω/kft	0.390	2.544	2.574 Ω/km
Zero Seq. Impedance (3 Phase, 4 wire, Earth & Ground):	0.200	0.161	0.257 Ω/kft	0.655	0.530	0.842 Ω/km

Customer:	SEATTLE CITY LIGHT	**Customer P/N:** 613735	**EA/PC Number:** 613735
Specification / Standard:	UL 44 & E6-1.1/NGE-71	**Prepared by:** Ndabeni, Ndaba	**Date:** 1/18/2011

This document was prepared for a specific purpose and the recipient, by accepting this information, assumes custody and control and agrees to take reasonable precautions that (a) this document will not be copied or reproduced, in whole or in part, or its contents revealed in any manner to any person, except to meet the specific purpose for which the document was delivered, and (b) that any features of this document will not be incorporated into any other projects without the express written permission of an officer of General Cable Corporation. This information has been calculated based on known formulae. The values are believed to be accurate and concise. Although they are mathematically derived, normal dimensional tolerances in actual cable construction and variations in the installation conditions may lead to differences between the indicated values and actual measured values.

General Cable

BICC BRAND

Drawing / Data Sheet

[SCL Stock Number 603736]

Triplexed Cable, 600V (UL 44 Type RHH/RHW-2 & UL 854 Type USE-2)

Representative drawing not to scale

Component Description	Thickness (inches) Min.	Min. Avg.	Max.	Diameter (inches) Min.	Nom.*	Max.
A: Phase Conductor 250 KCMIL Compressed (37W) Copper Phase Conductor	--	--	--	0.547	0.558	0.564
A-1: Insulation Extruded Crosslinked Polyethylene (XLPE)	0.086	0.095	--	--	0.753	--
B: Neutral Conductor 250 KCMIL Compressed (37W) Copper Neutral Conductor	--	--	--	0.547	0.558	0.564
B-1: Insulation Extruded Crosslinked Polyethylene (XLPE)	0.086	0.095	--	--	0.753	--
C: Plexed Assembly	--	--	--	--	1.623	--
Triplexed Cable Weight (Nominal): 2611 lb/kft *						

* - Nominal Values are Subject to Manufacturing Tolerances

Customer:	SEATTLE CITY LIGHT	**Customer P/N:** 613736	**EA/PC Number:** 613736
Specification / Standard:	UL 44 & E6-1.1/NGE-71	**Prepared By:** Ndabeni, Ndaba	**Date:** 1/18/2011

This document was prepared for a specific purpose and the recipient, by accepting this information, assumes custody and control and agrees to take reasonable precautions that (a) this document will not be copied or reproduced, in whole or in part, or its contents revealed in any manner to any person, except to meet the specific purpose for which the document was delivered, and (b) that any features of this document will not be incorporated into any other projects without the express written permission of an officer of General Cable Corporation. This information has been calculated based on known formulae. The values are believed to be accurate and concise. Although they are mathematically derived, normal dimensional tolerances in actual cable construction and variations in the installation conditions may lead to differences between the indicated values and actual measured values.

General Cable

BICC BRAND

Electrical Characteristics

[SCL Stock Number 603736]

Cable Description:	**(Triplex) 2-250 KCMIL XLPE-Insulated Phase, 1-250 KCMIL XLPE-Insulated Neutral**
Input Parameters:	**Phase Operating Temperature:** 90 °C **Neutral Operating Temperature*:** 75 °C **Dielectric Constant:** 2.55 **Earth Resistivity:** 100 ohm-m **Power Factor:** 0.95 **Voltage (line to ground):** 346 V **Frequency:** 60 hz *Used in Impedance Calculations Only
Conductor Resistance:	**Rdc @:** 20 °C 0.0424 Ω/kft 0.1391 Ω/km **Rac @:** 25 °C 0.0436 Ω/kft 0.1431 Ω/km 75 °C 0.0522 Ω/kft 0.1713 Ω/km 90 °C 0.0548 Ω/kft 0.1798 Ω/km
Neutral Resistance:	**Rdc @:** 20 °C 0.0424 Ω/kft 0.1391 Ω/km **Rac @:** 25 °C 0.0436 Ω/kft 0.1431 Ω/km 75 °C 0.0522 Ω/kft 0.1713 Ω/km
Capacitance/ Capacitive Reactance:	**Capacitance:** 0.144 µF/kft 0.474 µF/km **Capacitive Reactance:** 18360 Ω-kft 60238 Ω-km
Inductance/Impedance	**Inductive Reactance:** 0.029 Ω/kft 0.095 Ω/km **Inductance (w/ Partial Earth Return):** 0.211 Ω/kft 0.693 Ω/km **Mutual Reactance:** 0.085 Ω/kft 0.278 Ω/km **Impedance @ 25 °C:** 0.052 Ω/kft 0.172 Ω/km

3-Phase Reactance/Impedance:

	Real	Imag.	Magnitude	Real	Imag.	Magnitude
Pos. & Neg. Seq. Impedance (3-Phase)	0.055	0.029	0.062 Ω/kft	0.180	0.095	0.203 Ω/km
Zero Seq. Impedance (3 Phase, 3 Wire - Earth only):	0.109	0.767	0.774 Ω/kft	0.358	2.516	2.541 Ω/km
Zero Seq. Impedance (3 Phase, 4 wire, Earth & Ground):	0.171	0.154	0.230 Ω/kft	0.560	0.505	0.754 Ω/km

Customer:	SEATTLE CITY LIGHT	**Customer P/N:** 613736	**EA/PC Number:** 613736
Specification / Standard:	UL 44 & E6-1.1/NGE-71	**Prepared by:** Ndabeni, Ndaba	**Date:** 1/18/2011

This document was prepared for a specific purpose and the recipient, by accepting this information, assumes custody and control and agrees to take reasonable precautions that (a) this document will not be copied or reproduced, in whole or in part, or its contents revealed in any manner to any person, except to meet the specific purpose for which the document was delivered, and (b) that any features of this document will not be incorporated into any other projects without the express written permission of an officer of General Cable Corporation. This information has been calculated based on known formulae. The values are believed to be accurate and concise. Although they are mathematically derived, normal dimensional tolerances in actual cable construction and variations in the installation conditions may lead to differences between the indicated values and actual measured values.

General Cable

BICC BRAND

Drawing / Data Sheet

[SCL Stock Number 603737]

Triplexed Cable, 600V (UL 44 Type RHH/RHW-2 & UL 854 Type USE-2)

Representative drawing not to scale

Component Description	Thickness (inches) Min.	Min. Avg.	Max.	Diameter (inches) Min.	Nom.*	Max.
A: Phase Conductor 300 KCMIL Compressed (37W) Copper Phase Conductor	--	--	--	0.599	0.611	0.617
A-1: Insulation Extruded Crosslinked Polyethylene (XLPE)	0.086	0.095	--	--	0.806	--
B: Neutral Conductor 300 KCMIL Compressed (37W) Copper Neutral Conductor	--	--	--	0.599	0.611	0.617
B-1: Insulation Extruded Crosslinked Polyethylene (XLPE)	0.086	0.095	--	--	0.806	--
C: Plexed Assembly	--	--	--	--	1.737	--
Triplexed Cable Weight (Nominal): 3101 lb/kft *						

* - Nominal Values are Subject to Manufacturing Tolerances

Customer:	SEATTLE CITY LIGHT	**Customer P/N:** 613737	**EA/PC Number:** 613737
Specification / Standard:	UL 44 & E6-1.1/NGE-71	**Prepared By:** Ndabeni, Ndaba	**Date:** 1/18/2011

This document was prepared for a specific purpose and the recipient, by accepting this information, assumes custody and control and agrees to take reasonable precautions that (a) this document will not be copied or reproduced, in whole or in part, or its contents revealed in any manner to any person, except to meet the specific purpose for which the document was delivered, and (b) that any features of this document will not be incorporated into any other projects without the express written permission of an officer of General Cable Corporation. This information has been calculated based on known formulae. The values are believed to be accurate and concise. Although they are mathematically derived, normal dimensional tolerances in actual cable construction and variations in the installation conditions may lead to differences between the indicated values and actual measured values.

General Cable

BICC BRAND

Electrical Characteristics

[SCL Stock Number 603737]

Cable Description:	**(Triplex) 2-300 KCMIL XLPE-Insulated Phase, 1-300 KCMIL XLPE-Insulated Neutral**

Input Parameters:

Phase Operating Temperature:	90 °C	**Voltage (line to ground):**	346 V
Neutral Operating Temperature*:	75 °C	**Frequency:**	60 hz
Dielectric Constant:	2.55		
Earth Resistivity:	100 ohm-m		
Power Factor:	0.95		

*Used in Impedance Calculations Only

Conductor Resistance:

Rdc @:	20 °C	0.0353 Ω/kft	0.1159 Ω/km
Rac @:	25 °C	0.0365 Ω/kft	0.1197 Ω/km
	75 °C	0.0437 Ω/kft	0.1435 Ω/km
	90 °C	0.0459 Ω/kft	0.1506 Ω/km

Neutral Resistance:

Rdc @:	20 °C	0.0353 Ω/kft	0.1159 Ω/km
Rac @:	25 °C	0.0365 Ω/kft	0.1197 Ω/km
	75 °C	0.0437 Ω/kft	0.1435 Ω/km

Capacitance/ Capacitive Reactance:

Capacitance:	0.156 μF/kft	0.513 μF/km
Capacitive Reactance:	16968 Ω-kft	55671 Ω-km

Inductance/Impedance

Inductive Reactance:	0.028 Ω/kft	0.093 Ω/km
Inductance (w/ Partial Earth Return):	0.211 Ω/kft	0.691 Ω/km
Mutual Reactance:	0.084 Ω/kft	0.276 Ω/km
Impedance @ 25 °C:	0.046 Ω/kft	0.152 Ω/km

3-Phase Reactance/Impedance:

	Real	Imag.	Magnitude	Real	Imag.	Magnitude
Pos. & Neg. Seq. Impedance (3-Phase)	0.046	0.028	0.054 Ω/kft	0.151	0.093	0.177 Ω/km
Zero Seq. Impedance (3 Phase, 3 Wire - Earth only):	0.100	0.762	0.768 Ω/kft	0.328	2.498	2.520 Ω/km
Zero Seq. Impedance (3 Phase, 4 wire, Earth & Ground):	0.144	0.146	0.206 Ω/kft	0.474	0.481	0.675 Ω/km

Customer:	SEATTLE CITY LIGHT	**Customer P/N:** 613737	**EA/PC Number:** 613737
Specification / Standard:	UL 44 & E6-1.1/NGE-71	**Prepared by:** Ndabeni, Ndaba	**Date:** 1/18/2011

This document was prepared for a specific purpose and the recipient, by accepting this information, assumes custody and control and agrees to take reasonable precautions that (a) this document will not be copied or reproduced, in whole or in part, or its contents revealed in any manner to any person, except to meet the specific purpose for which the document was delivered, and (b) that any features of this document will not be incorporated into any other projects without the express written permission of an officer of General Cable Corporation. This information has been calculated based on known formulae. The values are believed to be accurate and concise. Although they are mathematically derived, normal dimensional tolerances in actual cable construction and variations in the installation conditions may lead to differences between the indicated values and actual measured values.

Utility Engineering Center
Tel: 859-572-8000

General Cable

BICC BRAND

Drawing / Data Sheet

[SCL Stock Number 603738]

Triplexed Cable, 600V (UL 44 Type RHH/RHW-2 & UL 854 Type USE-2)

Representative drawing not to scale

Component Description	Thickness (inches) Min.	Min. Avg.	Max.	Diameter (inches) Min.	Nom.*	Max.
A: Phase Conductor 350 KCMIL Compressed (37W) Copper Phase Conductor	--	--	--	0.628	0.641	0.647
A-1: Insulation Extruded Crosslinked Polyethylene (XLPE)	0.086	0.095	--	--	0.836	--
B: Neutral Conductor 350 KCMIL Compressed (37W) Copper Neutral Conductor	--	--	--	0.628	0.641	0.647
B-1: Insulation Extruded Crosslinked Polyethylene (XLPE)	0.086	0.095	--	--	0.836	--
C: Plexed Assembly	--	--	--	--	1.802	--
Triplexed Cable Weight (Nominal): 3581 lb/kft *						

* - Nominal Values are Subject to Manufacturing Tolerances

Customer:	SEATTLE CITY LIGHT	**Customer P/N:** 613738	**EA/PC Number:** 613738
Specification / Standard:	UL 44 & E6-1.1/NGE-71	**Prepared By:** Ndabeni, Ndaba	**Date:** 1/18/2011

This document was prepared for a specific purpose and the recipient, by accepting this information, assumes custody and control and agrees to take reasonable precautions that (a) this document will not be copied or reproduced, in whole or in part, or its contents revealed in any manner to any person, except to meet the specific purpose for which the document was delivered, and (b) that any features of this document will not be incorporated into any other projects without the express written permission of an officer of General Cable Corporation. This information has been calculated based on known formulae. The values are believed to be accurate and concise. Although they are mathematically derived, normal dimensional tolerances in actual cable construction and variations in the installation conditions may lead to differences between the indicated values and actual measured values.

General Cable

BICC BRAND

Electrical Characteristics

[SCL Stock Number 603738]

Cable Description:	**(Triplex) 2-350 KCMIL XLPE-Insulated Phase, 1-350 KCMIL XLPE-Insulated Neutral**

Input Parameters:

Phase Operating Temperature:	90 °C	**Voltage (line to ground):**	346 V
Neutral Operating Temperature*:	75 °C	**Frequency:**	60 hz
Dielectric Constant:	2.55		
Earth Resistivity:	100 ohm-m		
Power Factor:	0.95		

*Used in Impedance Calculations Only

Conductor Resistance:

Rdc @:	20 °C	0.0303 Ω/kft	0.0994 Ω/km
Rac @:	25 °C	0.0314 Ω/kft	0.1030 Ω/km
	75 °C	0.0369 Ω/kft	0.1212 Ω/km
	90 °C	0.0387 Ω/kft	0.1271 Ω/km

Neutral Resistance:

Rdc @:	20 °C	0.0303 Ω/kft	0.0994 Ω/km
Rac @:	25 °C	0.0314 Ω/kft	0.1030 Ω/km
	75 °C	0.0369 Ω/kft	0.1212 Ω/km

Capacitance/ Capacitive Reactance:

Capacitance:	0.163 μF/kft	0.535 μF/km
Capacitive Reactance:	16270 Ω-kft	53383 Ω-km

Inductance/Impedance

Inductive Reactance:	0.028 Ω/kft	0.092 Ω/km
Inductance (w/ Partial Earth Return):	0.210 Ω/kft	0.690 Ω/km
Mutual Reactance:	0.084 Ω/kft	0.275 Ω/km
Impedance @ 25 °C:	0.042 Ω/kft	0.138 Ω/km

3-Phase Reactance/Impedance:

	Real	Imag.	Magnitude	Real	Imag.	Magnitude
Pos. & Neg. Seq. Impedance (3-Phase)	0.039	0.028	0.048 Ω/kft	0.127	0.092	0.157 Ω/km
Zero Seq. Impedance (3 Phase, 3 Wire - Earth only):	0.093	0.759	0.764 Ω/kft	0.305	2.489	2.508 Ω/km
Zero Seq. Impedance (3 Phase, 4 wire, Earth & Ground):	0.123	0.142	0.187 Ω/kft	0.403	0.465	0.615 Ω/km

Customer:	SEATTLE CITY LIGHT	**Customer P/N:** 613738	**EA/PC Number:** 613738
Specification / Standard:	UL 44 & E6-1.1/NGE-71	**Prepared by:** Ndabeni, Ndaba	**Date:** 1/18/2011

This document was prepared for a specific purpose and the recipient, by accepting this information, assumes custody and control and agrees to take reasonable precautions that (a) this document will not be copied or reproduced, in whole or in part, or its contents revealed in any manner to any person, except to meet the specific purpose for which the document was delivered, and (b) that any features of this document will not be incorporated into any other projects without the express written permission of an officer of General Cable Corporation. This information has been calculated based on known formulae. The values are believed to be accurate and concise. Although they are mathematically derived, normal dimensional tolerances in actual cable construction and variations in the installation conditions may lead to differences between the indicated values and actual measured values.

Utility Engineering Center
Tel: 859-572-8000

General Cable

BICC BRAND

Drawing / Data Sheet

[SCL Stock Number 603740]

Triplexed Cable, 600V (UL 44 Type RHH/RHW-2 & UL 854 Type USE-2)

Representative drawing not to scale

Component Description	Thickness (inches) Min.	Min. Avg.	Max.	Diameter (inches) Min.	Nom.*	Max.
A: Phase Conductor 500 KCMIL Compressed (37W) Copper Phase Conductor	--	--	--	0.773	0.789	0.797
A-1: Insulation Extruded Crosslinked Polyethylene (XLPE)	0.086	0.095	--	--	0.984	--
B: Neutral Conductor 500 KCMIL Compressed (37W) Copper Neutral Conductor	--	--	--	0.773	0.789	0.797
B-1: Insulation Extruded Crosslinked Polyethylene (XLPE)	0.086	0.095	--	--	0.984	--
C: Plexed Assembly	--	--	--	--	2.121	--
Triplexed Cable Weight (Nominal): 5047 lb/kft *						

* - Nominal Values are Subject to Manufacturing Tolerances

Customer:	SEATTLE CITY LIGHT	**Customer P/N:** 613740	**EA/PC Number:** 613740
Specification / Standard:	UL 44 & E6-1.1/NGE-71	**Prepared By:** Ndabeni, Ndaba	**Date:** 1/18/2011

This document was prepared for a specific purpose and the recipient, by accepting this information, assumes custody and control and agrees to take reasonable precautions that (a) this document will not be copied or reproduced, in whole or in part, or its contents revealed in any manner to any person, except to meet the specific purpose for which the document was delivered, and (b) that any features of this document will not be incorporated into any other projects without the express written permission of an officer of General Cable Corporation. This information has been calculated based on known formulae. The values are believed to be accurate and concise. Although they are mathematically derived, normal dimensional tolerances in actual cable construction and variations in the installation conditions may lead to differences between the indicated values and actual measured values.

General Cable

BICC BRAND

Electrical Characteristics

[SCL Stock Number 603740]

Cable Description:	**(Triplex) 2-500 KCMIL XLPE-Insulated Phase, 1-500 KCMIL XLPE-Insulated Neutral**
Input Parameters:	**Phase Operating Temperature:** 90 °C **Neutral Operating Temperature*:** 75 °C **Dielectric Constant:** 2.55 **Earth Resistivity:** 100 ohm-m **Power Factor:** 0.95 **Voltage (line to ground):** 346 V **Frequency:** 60 hz *Used in Impedance Calculations Only
Conductor Resistance:	**Rdc @:** 20 °C 0.0212 Ω/kft 0.0696 Ω/km **Rac @:** 25 °C 0.0223 Ω/kft 0.0732 Ω/km 75 °C 0.0269 Ω/kft 0.0884 Ω/km 90 °C 0.0283 Ω/kft 0.0930 Ω/km
Neutral Resistance:	**Rdc @:** 20 °C 0.0212 Ω/kft 0.0696 Ω/km **Rac @:** 25 °C 0.0223 Ω/kft 0.0732 Ω/km 75 °C 0.0269 Ω/kft 0.0884 Ω/km
Capacitance/ Capacitive Reactance:	**Capacitance:** 0.196 µF/kft 0.643 µF/km **Capacitive Reactance:** 13530 Ω-kft 44390 Ω-km
Inductance/Impedance	**Inductive Reactance:** 0.027 Ω/kft 0.089 Ω/km **Inductance (w/ Partial Earth Return):** 0.209 Ω/kft 0.687 Ω/km **Mutual Reactance:** 0.082 Ω/kft 0.270 Ω/km **Impedance @ 25 °C:** 0.035 Ω/kft 0.115 Ω/km

3-Phase Reactance/Impedance:

	Real	Imag.	Magnitude	Real	Imag.	Magnitude
Pos. & Neg. Seq. Impedance (3-Phase)	0.028	0.027	0.039 Ω/kft	0.093	0.089	0.129 Ω/km
Zero Seq. Impedance (3 Phase, 3 Wire - Earth only):	0.083	0.746	0.751 Ω/kft	0.271	2.449	2.464 Ω/km
Zero Seq. Impedance (3 Phase, 4 wire, Earth & Ground):	0.091	0.133	0.161 Ω/kft	0.297	0.438	0.529 Ω/km

Customer:	SEATTLE CITY LIGHT	**Customer P/N:** 613740	**EA/PC Number:** 613740
Specification / Standard:	UL 44 & E6-1.1/NGE-71	**Prepared by:** Ndabeni, Ndaba	**Date:** 1/18/2011

This document was prepared for a specific purpose and the recipient, by accepting this information, assumes custody and control and agrees to take reasonable precautions that (a) this document will not be copied or reproduced, in whole or in part, or its contents revealed in any manner to any person, except to meet the specific purpose for which the document was delivered, and (b) that any features of this document will not be incorporated into any other projects without the express written permission of an officer of General Cable Corporation. This information has been calculated based on known formulae. The values are believed to be accurate and concise. Although they are mathematically derived, normal dimensional tolerances in actual cable construction and variations in the installation conditions may lead to differences between the indicated values and actual measured values.

General Cable

BICC BRAND

Drawing / Data Sheet

[SCL Stock Number 603743]

Triplexed Cable, 600V (UL 44 Type RHH/RHW-2 & UL 854 Type USE-2)

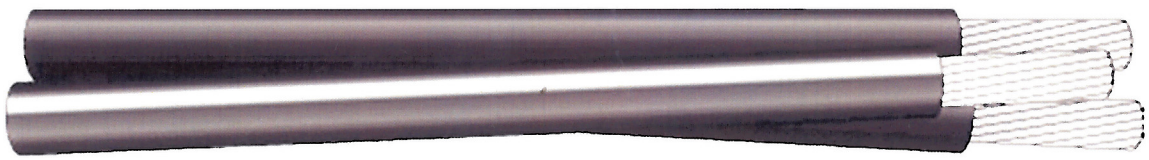

Representative drawing not to scale

Component Description	Thickness (inches) Min.	Min. Avg.	Max.	Diameter (inches) Min.	Nom.*	Max.
A: Phase Conductor 750 KCMIL Compressed (61W) Copper Phase Conductor	--	--	--	0.949	0.968	0.978
A-1: Insulation Extruded Crosslinked Polyethylene (XLPE)	0.099	0.110	--	--	1.193	--
B: Neutral Conductor 750 KCMIL Compressed (61W) Copper Neutral Conductor	--	--	--	0.949	0.968	0.978
B-1: Insulation Extruded Crosslinked Polyethylene (XLPE)	0.099	0.110	--	--	1.193	--
C: Plexed Assembly	--	--	--	--	2.571	--
Triplexed Cable Weight (Nominal): 7525 lb/kft *						

* - Nominal Values are Subject to Manufacturing Tolerances

Customer:	SEATTLE CITY LIGHT	**Customer P/N:** 613743	**EA/PC Number:** 613743
Specification / Standard:	UL 44 & E6-1.1/NGE-71	**Prepared By:** Ndabeni, Ndaba	**Date:** 1/18/2011

This document was prepared for a specific purpose and the recipient, by accepting this information, assumes custody and control and agrees to take reasonable precautions that (a) this document will not be copied or reproduced, in whole or in part, or its contents revealed in any manner to any person, except to meet the specific purpose for which the document was delivered, and (b) that any features of this document will not be incorporated into any other projects without the express written permission of an officer of General Cable Corporation. This information has been calculated based on known formulae. The values are believed to be accurate and concise. Although they are mathematically derived, normal dimensional tolerances in actual cable construction and variations in the installation conditions may lead to differences between the indicated values and actual measured values.

General Cable

BICC BRAND

Electrical Characteristics

[SCL Stock Number 603743]

Cable Description:	**(Triplex) 2-750 KCMIL XLPE-Insulated Phase, 1-750 KCMIL XLPE-Insulated Neutral**
Input Parameters:	**Phase Operating Temperature:** 90 °C **Neutral Operating Temperature*:** 75 °C **Dielectric Constant:** 2.55 **Earth Resistivity:** 100 ohm-m **Power Factor:** 0.95 **Voltage (line to ground):** 346 V **Frequency:** 60 hz *Used in Impedance Calculations Only
Conductor Resistance:	**Rdc @:** 20 °C 0.0141 Ω/kft 0.0464 Ω/km **Rac @:** 25 °C 0.0154 Ω/kft 0.0505 Ω/km 75 °C 0.0188 Ω/kft 0.0616 Ω/km 90 °C 0.0198 Ω/kft 0.0650 Ω/km
Neutral Resistance:	**Rdc @:** 20 °C 0.0141 Ω/kft 0.0464 Ω/km **Rac @:** 25 °C 0.0154 Ω/kft 0.0505 Ω/km 75 °C 0.0188 Ω/kft 0.0616 Ω/km
Capacitance/ Capacitive Reactance:	**Capacitance:** 0.207 µF/kft 0.680 µF/km **Capacitive Reactance:** 12803 Ω-kft 42006 Ω-km
Inductance/Impedance	**Inductive Reactance:** 0.027 Ω/kft 0.088 Ω/km **Inductance (w/ Partial Earth Return):** 0.209 Ω/kft 0.686 Ω/km **Mutual Reactance:** 0.081 Ω/kft 0.264 Ω/km **Impedance @ 25 °C:** 0.031 Ω/kft 0.101 Ω/km

3-Phase Reactance/Impedance:

	Real	Imag.	Magnitude	Real	Imag.	Magnitude
Pos. & Neg. Seq. Impedance (3-Phase)	0.020	0.027	0.033 Ω/kft	0.065	0.088	0.109 Ω/km
Zero Seq. Impedance (3 Phase, 3 Wire - Earth only):	0.074	0.733	0.737 Ω/kft	0.243	2.404	2.417 Ω/km
Zero Seq. Impedance (3 Phase, 4 wire, Earth & Ground):	0.064	0.129	0.144 Ω/kft	0.209	0.424	0.472 Ω/km

Customer:	SEATTLE CITY LIGHT	**Customer P/N:** 613743	**EA/PC Number:** 613743
Specification / Standard:	UL 44 & E6-1.1/NGE-71	**Prepared by:** Ndabeni, Ndaba	**Date:** 1/18/2011

This document was prepared for a specific purpose and the recipient, by accepting this information, assumes custody and control and agrees to take reasonable precautions that (a) this document will not be copied or reproduced, in whole or in part, or its contents revealed in any manner to any person, except to meet the specific purpose for which the document was delivered, and (b) that any features of this document will not be incorporated into any other projects without the express written permission of an officer of General Cable Corporation. This information has been calculated based on known formulae. The values are believed to be accurate and concise. Although they are mathematically derived, normal dimensional tolerances in actual cable construction and variations in the installation conditions may lead to differences between the indicated values and actual measured values.

4. References

9650.03; "Properties of 600 Volt and Weather-Proof Cables;" *Design Standard*; SCL

9660.04; "Properties of Medium Voltage Cables;" *Design Standard*; SCL

Shipek, John; SCL Standards Engineer, subject matter expert and originator of 9650.05 (john.shipek@seattle.gov)

www.generalcable.com

PROPERTIES OF MEDIUM VOLTAGE CABLES

1. Scope

This design standard lists basic physical properties for the variety of medium cables in use on Seattle City Light's system.

Paper-insulated-lead-covered (PILC) cable, 600 volt cable, weather-proof cable, control cable, and bare conductor are outside the scope of this standard.

2. Application

Cable properties are as described in the tables 4.1 and 4.2. These tables are designed to be read across the two-page spread.

This design standard is intended to be used by Seattle City Light engineers, warehouse personnel, installation crews, and suppliers to more easily identify the wide-variety of cable in use at Seattle City Light and to improve access to useful cable attributes.

This design standard may be distributed externally provided approval is first obtained from the Manager of Standards.

3. Properties

Application information and graphics may be found in Class 60 of the City Light Stock Catalog.

In addition to information provided in the tables, the following attributes may be found in the general Material Standard 6015.00 or the pertinent detailed Material Standard:

- Governing industry standards
- Normal, emergency overload, and short circuit operating temperatures
- Metallic shield dimensional properties
- Conductor diameter, minimum
- Conductor diameter, maximum
- Conductor, number of strands
- Conductor shield thickness, minimum point
- Insulation thickness, minimum point
- Insulation thickness, maximum point
- Basic impulse level (BIL)
- Insulation level
- Extruded insulation shield thickness, minimum point
- Extruded insulation shield thickness, maximum point
- Metallic shield cross-sectional area, minimum
- Jacket thickness, minimum point
- Jacket thickness, maximum point
- Special identification, if any
- Packaging information
- Approved suppliers

Because medium voltage cable is a constantly evolving product, it is not practical to summarize all characteristics with 100 percent accuracy. For more accurate information, refer to the vintage of requirements used to purchase the product.

Cited Material Standards may be current and up-to-date or cancelled. In some cases, data is provided for historical purposes only. In the following tables (pages 3 and 5), Material Standard numbers in gray indicates the document has been cancelled (rescinded). See page 6 for a key relating current or last active Material Standard numbers to superseded numbers.

A Stock Number does not imply a material item is in stock. Refer to Passport for product availability.

Non-stock cable, 35 kV, 1/C, 350 kcmil, Cu, compressed, for Seattle Center Opera House, installed circa 2002.

Refer to Construction Guideline U1-4.11/NCI-60 and Design Standards 9271.05 for cable pulling calculations and work practices.

Maximum sidewall pressure values provided by General Cable, 2003. General Cable comments: When dealing with sidewall pressure, the calculated tension on the cable assembly at the exit of a bend can not exceed the Maximum Pulling Tension limit of the cable.

See page 6 for list of abbreviations used in tables.

standards coordinator	standards manager	unit director
John Shipek	John Shipek	Pamela S. Johnson

4.1, Table 1, Cable Data Sorted by Stock Number (two-page spread)

▼	Cable Assembly		Conductor					Insulation		
Stock Number	Rated Circuit Voltage, kV	Construc-tion	Size, AWG/ kcmil	Alloy	Temper	Shape	Nominal Diameter, in.	Type	Nominal Thick-ness, mil	Minimum Diameter, Over, in.
1	2	3	4	5	6	7	8	9	10	11
010128	**15**	3/C	500	Cu	soft	compact	0.736	EPR	175	1.13
012098	**28**	1/C+1N	1/0	Al-1350	1/2 hard	solid	0.325	TRXLP	280	0.88
012099	**28**	1/C	350	Al-1350	3/4 hard	compact	0.616	TRXLP	280	1.22
012100	**28**	1/C	500	Cu	soft	compact	0.736	TRXLP	280	1.34
012101	**28**	1/C	750	Cu	soft	compact	0.908	TRXLP	280	1.63
012102	**28**	1/C	1000	Cu	soft	compact	1.060	TRXLP	280	1.67
012735	**15**	3-1/C	500	Cu	soft	compressed	0.789	EPR	175	1.16
601025	**5**	1/C	500	Al	na	class B	0.813	XLPE	90	na
602025	**28**	1/C+1N	1/0	Al-1350	1/2 hard	solid	0.325	TRXLP	280	0.88
602027	**28**	1/C	#1	Al	3/4 hard	class B	0.332	XLPE	275	0.88
602044	**28**	1/C	350	Al	3/4 hard	class B	0.681	XLPE	275	1.23
602119	**28**	1/C	750	Al	na	compact	0.908	XLPE	275	1.49
613212	**5**	1/C	#6	Cu	soft	compressed	0.178	TRXLP	90	0.37
613222	**5**	1/C	350	Cu	soft	compressed	0.661	TRXLP	90	0.88
613520	**15**	3/C	2/0	Cu	soft	compressed	0.405	XLPE	175	0.76
613521	**15**	3/C	3/0	Cu	soft	compressed	0.456	TRXLP	175	0.84
613522	**15**	3/C	#1	Cu	soft	compressed	0.322	TRXLP	175	0.70
613523	**15**	3/C	#1	Cu	soft	compressed	0.322	TRXLP	175	0.70
613526	**15**	3/C	3/0	Cu	soft	compressed	0.456	TRXLP	175	0.84
613530	**15**	3/C	350	Cu	soft	compact	0.616	TRXLP	175	1.03
613531	**15**	3/C	500	Cu	soft	sector	na	XLPE	na	na
613532	**15**	3/C	500	Cu	soft	compact	0.736	XLPE	na	1.14
613533	**15**	3/C	750	Cu	soft	sector	na	XLPE	na	na
613534	**15**	3/C	750	Cu	soft	compact	0.908	XLPE	na	1.29
613540	**28**	3/C+3G	#1	Cu	soft	compressed	0.322	TRXLP	280	0.91
613543	**28**	3/C+3G	350	Cu	soft	compact	0.616	TRXLP	280	1.23
613613	**28**	1/C	350	Al	na	compact	0.616	XLPE	na	1.23
613615	**28**	1/C	500	Cu	soft	compact	0.736	XLPE	na	1.35
613618	**28**	1/C	750	Cu	soft	compact	0.908	XLPE	275	1.49
613619	**28**	1/C	1000	Cu	soft	compact	1.060	XLPE	na	1.68
613645	**28**	1/C	500	Cu	soft	compressed	0.789	TRXLP	280	1.40
613655	**28**	1/C	1000	Cu	soft	compressed	1.117	TRXLP	280	1.74
623640	**15**	1/C	500	Cu	soft	compact	0.736	EPR	175	1.13
623650	**27**	3-1/C+2N	#8	Cu	soft	compressed	0.142	EPR	280	0.70
623655	**35**	1/C	1000	Cu	soft	compact	1.060	TRXLP	420	1.97
623660	**35**	1/C	750	Al	3/4 hard	compact	0.908	XLPE	345	na
623670	**15**	3-1/C	1000	Cu	soft	compressed	1.117	EPR	175	1.52
974050	**28**	3/C	750	Cu	soft	sector	na	XLPE	280	na
none*	**35**	1/C	350	Cu	soft	compressed	0.661	EPR	345	na

* see section 3

Insulation		Insulation Shield	Jacket	Cable Assembly							
Nom. Dia. Over, in.	Max. Dia. Over, in.	Type	Material	Typical Dia. Over, in.	Max. Dia. Over, in.	Weight per Foot, lbs.	Max. Sidewall Pressure, lbs./ft. of Bend Radius	Max. Pulling Tension, lbs.	Typical Appli-cation	Material Standard Number	Stock Number
12	13	14	15	16	17	18	19	20	21	22	23
1.14	1.19	tape	LLDPE	2.85	2.92	6.8	1,500	8,000	NET	6025.10	**010128**
0.93	0.97	RW/CN	LLDPE	1.27	1.35	0.8	1,500	634	URD	6020.06	**012098**
1.25	1.28	FS	LLDPE	1.48	1.57	1.2	1,500	2,100	URD	6020.07	**012099**
1.37	1.40	FS	LLDPE	1.62	1.70	2.5	1,500	4,000	URD	6020.07	**012100**
1.69	1.73	FS	LLDPE	1.88	2.00	3.5	1,500	6,000	URD	6020.07	**012101**
1.70	1.73	FS	LLDPE	2.03	2.10	4.4	1,500	8,000	URD	6020.07	**012102**
1.19	1.21	FS	LLDPE	3.02	3.34	6.7	1,500	na	NET	6025.60	**012735**
na	na	DW	PVC	na	1.15	1.4	1,000	3,000	URD	6010.2	**601025**
0.93	0.97	RW/CN	bare	1.02	1.30	0.6	750	423	URD	6020.03	**602025**
0.93	0.98	RW/CN	bare	na	na	na	750	502	URD	6020.2	**602027**
1.30	1.38	RW/CN	bare	1.50	na	na	750	2,100	URD	6020.2	**602044**
1.55	1.59	DW	PVC	1.90	2.01	na	1,000	4,500	URD	6021.1	**602119**
0.42	0.45	tape	LLDPE or PP	na	0.67	0.2	1,500	210	URD	6010.20	**613212**
0.91	0.94	tape	LLDPE or PP	1.16	1.20	1.5	1,500	2,800	URD	6010.20	**613222**
na	0.84	tape	armored	na	na	na	na	na	NET	none	**613520**
0.85	0.90	tape	armored	na	2.55	6.8	na	na	NET	6020.02	**613521**
0.74	0.76	tape	armored	na	2.25	na	na	na	NET	6020.02	**613522**
0.74	0.76	tape	LLDPE	2.10	2.25	2.1	1,500	1,339	NET	6020.01	**613523**
0.85	0.90	tape	LLDPE	2.35	2.45	3.3	1,500	2,685	NET	6020.01	**613526**
1.03	1.05	tape	LLDPE	2.61	2.85	5.4	1,500	5,600	NET	6020.01	**613530**
na	na	tape	LLDPE	na	na	9.6	na	na	NET	6020.01	**613531**
1.15	1.15	tape	LLDPE or PP	2.80	3.15	7.1	1,500	8,000	NET	6020.01	**613532**
na	na	tape	LLDPE or PP	na	na	na	na	na	NET	6020.01	**613533**
1.34	1.39	tape	LLDPE	3.44	3.65	10.2	1,500	12,000	NET	6020.01	**613534**
0.94	0.97	tape	LLDPE	2.60	2.65	3.2	1,500	1,339	NET	6020.05	**613540**
1.25	1.28	tape	LLDPE	3.33	3.45	6.7	1,500	5,600	NET	6020.05	**613543**
1.24	1.29	DW	PVC	1.55	1.75	1.2	1,000	2,100	URD	none	**613613**
1.37	1.41	DW	PVC	1.70	1.80	2.7	1,000	4,000	URD	6020.4	**613615**
1.55	1.59	DW	PVC	1.90	2.05	3.5	1,000	6,000	URD	6021.1	**613618**
1.71	1.74	DW	PVC	2.09	2.20	4.3	1,000	8,000	URD	none	**613619**
1.44	1.46	FS	LLDPE	1.75	1.95	2.6	1,500	4,000	URD	6020.14	**613645**
1.76	1.80	FS	LLDPE	2.15	2.40	4.6	1,500	8,000	URD	6020.14	**613655**
1.16	1.19	tape	PVC	1.50	1.60	2.5	1,500	4,000	NET	6025.70	**623640**
0.77	0.79	tape	PVC	na	na	1.6	na	na	NET	none	**623650**
1.99	2.03	tape	LLDPE	2.43	2.45	4.7	1,500	8,000	special	6236.60	**623655**
1.66	na	DW	PVC	2.07	na	na	1,000	4,500	URD	6236.5	**623660**
1.54	1.58	FS	LLDPE	3.94	4.29	12.8	1,500	16,000	NET	6025.60	**623670**
na	na	tape	na	na	3.65	na	na	na	NET	6020.0	**974050**
na	na	tape	PVC	1.71	na	2.2	1,000	2,800	special	none	**none**

4.2, Table 2, Cable Data Sorted by Voltage and Conductor Size (two-page spread)

	1st ▼ Cable Assembly		2nd ▼ Conductor					Insulation		
Stock Number	Rated Circuit Voltage, kV	Construc-tion	Size, AWG/ kcmil	Alloy	Temper	Shape	Nominal Diameter, in.	Type	Nominal Thick-ness, mil	Minimum Diameter, Over, in.
1	2	3	4	5	6	7	8	9	10	11
613212	**5**	1/C	**#6**	Cu	soft	compressed	0.178	TRXLP	90	0.37
613222	**5**	1/C	**350**	Cu	soft	compressed	0.661	TRXLP	90	0.88
601025	**5**	1/C	**500**	Al	na	class B	0.813	XLPE	90	na
613522	**15**	3/C	**#1**	Cu	soft	compressed	0.322	TRXLP	175	0.70
613523	**15**	3/C	**#1**	Cu	soft	compressed	0.322	TRXLP	175	0.70
613520	**15**	3/C	**2/0**	Cu	soft	compressed	0.405	XLPE	175	0.76
613521	**15**	3/C	**3/0**	Cu	soft	compressed	0.456	TRXLP	175	0.84
613526	**15**	3/C	**3/0**	Cu	soft	compressed	0.456	TRXLP	175	0.84
613530	**15**	3/C	**350**	Cu	soft	compact	0.616	TRXLP	175	1.03
613531	**15**	3/C	**500**	Cu	soft	sector	na	XLPE	na	na
010128	**15**	3/C	**500**	Cu	soft	compact	0.736	EPR	175	1.13
613532	**15**	3/C	**500**	Cu	soft	compact	0.736	XLPE	na	1.14
623640	**15**	1/C	**500**	Cu	soft	compact	0.736	EPR	175	1.13
012735	**15**	3-1/C	**500**	Cu	soft	compressed	0.789	EPR	175	1.16
613533	**15**	3/C	**750**	Cu	soft	sector	na	XLPE	na	na
613534	**15**	3/C	**750**	Cu	soft	compact	0.908	XLPE	na	1.29
623670	**15**	3-1/C	**1000**	Cu	soft	compressed	1.117	EPR	175	1.52
623650	**27**	3-1/C+2N	**#8**	Cu	soft	compressed	0.142	EPR	280	0.70
602027	**28**	1/C	**#1**	Al	3/4 hard	class B	0.332	XLPE	275	0.88
613540	**28**	3/C+3G	**#1**	Cu	soft	compressed	0.322	TRXLP	280	0.91
602025	**28**	1/C+1N	**1/0**	Al-1350	1/2 hard	solid	0.325	TRXLP	280	0.88
012098	**28**	1/C+1N	**1/0**	Al-1350	1/2 hard	solid	0.325	TRXLP	280	0.88
602044	**28**	1/C	**350**	Al	3/4 hard	class B	0.681	XLPE	275	1.23
012099	**28**	1/C	**350**	Al-1350	3/4 hard	compact	0.616	TRXLP	280	1.22
613613	**28**	1/C	**350**	Al	na	compact	0.616	XLPE	na	1.23
613543	**28**	3/C+3G	**350**	Cu	soft	compact	0.616	TRXLP	280	1.23
012100	**28**	1/C	**500**	Cu	soft	compact	0.736	TRXLP	280	1.34
613615	**28**	1/C	**500**	Cu	soft	compact	0.736	XLPE	na	1.35
613645	**28**	1/C	**500**	Cu	soft	compressed	0.789	TRXLP	280	1.40
602119	**28**	1/C	**750**	Al	na	compact	0.908	XLPE	275	1.49
613618	**28**	1/C	**750**	Cu	soft	compact	0.908	XLPE	275	1.49
974050	**28**	3/C	**750**	Cu	soft	sector	na	XLPE	280	na
012101	**28**	1/C	**750**	Cu	soft	compact	0.908	TRXLP	280	1.63
012102	**28**	1/C	**1000**	Cu	soft	compact	1.060	TRXLP	280	1.67
613619	**28**	1/C	**1000**	Cu	soft	compact	1.060	XLPE	na	1.68
613655	**28**	1/C	**1000**	Cu	soft	compressed	1.117	TRXLP	280	1.74
none*	**35**	1/C	**350**	Cu	soft	compressed	0.661	EPR	345	na
623660	**35**	1/C	**750**	Al	3/4 hard	compact	0.908	XLPE	345	na
623655	**35**	1/C	**1000**	Cu	soft	compact	1.060	TRXLP	420	1.97

* see section 3

Insulation		Insulation Shield	Jacket	Cable Assembly							
Nom. Dia. Over, in.	Max. Dia. Over, in.	Type	Material	Typical Dia. Over, in.	Max. Dia. Over, in.	Weight per Foot, lbs.	Max. Sidewall Pressure, lbs./ft. of Bend Radius	Max. Pulling Tension, lbs.	Typical Appli-cation	Material Standard Number	Stock Number
12	13	14	15	16	17	18	19	20	21	22	23
0.42	0.45	tape	LLDPE or PP	na	0.67	0.2	1,500	210	URD	6010.20	**613212**
0.91	0.94	tape	LLDPE or PP	1.16	1.20	1.5	1,500	2,800	URD	6010.20	**613222**
na	na	DW	PVC	na	1.15	1.4	1,000	3,000	URD	6010.2	**601025**
0.74	0.76	tape	armored	na	2.25	na	na	na	NET	6020.02	**613522**
0.74	0.76	tape	LLDPE	2.10	2.25	2.1	1,500	1,339	NET	6020.01	**613523**
na	0.84	tape	armored	na	na	na	na	na	NET	none	**613520**
0.85	0.90	tape	armored	na	2.55	6.8	na	na	NET	6020.02	**613521**
0.85	0.90	tape	LLDPE	2.35	2.45	3.3	1,500	2,685	NET	6020.01	**613526**
1.03	1.05	tape	LLDPE	2.61	2.85	5.4	1,500	5,600	NET	6020.01	**613530**
na	na	tape	LLDPE	na	na	9.6	na	na	NET	6020.01	**613531**
1.14	1.19	tape	LLDPE	2.85	2.92	6.8	1,500	8,000	NET	6025.10	**010128**
1.15	1.15	tape	LLDPE or PP	2.80	3.15	7.1	1,500	8,000	NET	6020.01	**613532**
1.16	1.19	tape	PVC	1.50	1.60	2.5	1,500	4,000	NET	6025.70	**623640**
1.19	1.21	FS	LLDPE	3.02	3.34	6.7	1,500	na	NET	6025.60	**012735**
na	na	tape	LLDPE or PP	na	na	na	na	na	NET	6020.01	**613533**
1.34	1.39	tape	LLDPE	3.44	3.65	10.2	1,500	12,000	NET	6020.01	**613534**
1.54	1.58	FS	LLDPE	3.94	4.29	12.8	1,500	16,000	NET	6025.60	**623670**
0.77	0.79	tape	PVC	na	na	1.6	na	na	NET	none	**623650**
0.93	0.98	RW/CN	bare	na	na	na	750	502	URD	6020.2	**602027**
0.94	0.97	tape	LLDPE	2.60	2.65	3.2	1,500	1,339	NET	6020.05	**613540**
0.93	0.97	RW/CN	bare	1.02	1.30	0.6	750	423	URD	6020.03	**602025**
0.93	0.97	RW/CN	LLDPE	1.27	1.35	0.8	1,500	634	URD	6020.06	**012098**
1.30	1.38	RW/CN	bare	1.50	na	na	750	2,100	URD	6020.2	**602044**
1.25	1.28	FS	LLDPE	1.48	1.57	1.2	1,500	2,100	URD	6020.07	**012099**
1.24	1.29	DW	PVC	1.55	1.75	1.2	1,000	2,100	URD	none	**613613**
1.25	1.28	tape	LLDPE	3.33	3.45	6.7	1,500	5,600	NET	6020.05	**613543**
1.37	1.40	FS	LLDPE	1.62	1.70	2.5	1,500	4,000	URD	6020.07	**012100**
1.37	1.41	DW	PVC	1.70	1.80	2.7	1,000	4,000	URD	6020.4	**613615**
1.44	1.46	FS	LLDPE	1.75	1.95	2.6	1,500	4,000	URD	6020.14	**613645**
1.55	1.59	DW	PVC	1.90	2.01	na	1,000	4,500	URD	6021.1	**602119**
1.55	1.59	DW	PVC	1.90	2.05	3.5	1,000	6,000	URD	6021.1	**613618**
na	na	tape	na	na	3.65	na	na	na	NET	6020.0	**974050**
1.69	1.73	FS	LLDPE	1.88	2.00	3.5	1,500	6,000	URD	6020.07	**012101**
1.70	1.73	FS	LLDPE	2.03	2.10	4.4	1,500	8,000	URD	6020.07	**012102**
1.71	1.74	DW	PVC	2.09	2.20	4.3	1,000	8,000	URD	none	**613619**
1.76	1.80	FS	LLDPE	2.15	2.40	4.6	1,500	8,000	URD	6020.14	**613655**
na	na	tape	PVC	1.71	na	2.2	1,000	2,800	special	none	**none**
1.66	na	DW	PVC	2.07	na	na	1,000	4,500	URD	6236.5	**623660**
1.99	2.03	tape	LLDPE	2.43	2.45	4.7	1,500	8,000	special	6236.60	**623655**

5. Abbreviations and Terminology

The following terms are used in the tables on the previous pages.

1/C	Single conductor with metallic shield
1/C+N	Phase conductor with neutral, also known as a two conductor cable
3/C	Three conductors under a single jacket
3/C+3G	Three conductors and three (bare) ground conductors under one jacket
3-1/C	Three single conductors twisted
3-1/C+2N	Three single conductors and two (bare) neutral conductors, twisted
DW	Drain wire metallic shield
EPR	Ethylene propylene rubber
FS	Flat strap metallic shield
LLDPE	Linear low density polyethylene
na	Not applicable or not available
PP	Polypropylene
PVC	Polyvinyl chloride
RW/CN	Round wire concentric neutral
TRXLPE	Tree retardant, crosslinked polyethylene

6. Renumbering Key

Relating current SCL Material Standard numbers to numbers superseded since 2007 or before.

Matl. Std. Numbers			
new	old	new	old
6010.20	6010.2	6020.02	6020.20
6020.0	6020.0	6020.4	6020.4
6020.01	6020.1	6021.1	6021.1
6020.03	6020.3	6025.10	6025.1
6020.05	6020.5	6025.60	6025.6
6020.06	6020.6	6025.70	none
6020.07	6020.7	6236.5	6236.5
6020.14	6020.14	6236.60	6236.6

Note: Material Standard numbers in gray indicate cancelled status.

7. References

6010.20; "5 KV, 1/C, TRXLPE Insulated, Tape Shielded Cable;" Material Standard; SCL

6015.00; "Medium Voltage Cable - General;" Material Standard; SCL

6020.01; "615 kV, 3/C, TRXLPE Insulated, Tape Shielded Cable;" Material Standard; SCL

6020.02; "15 KV, 3/C, Armored, TRXLPE Insulated, Tape Shielded Cable;" Material Standard; SCL

6020.03; "28 KV, 1/C, TRXLPE Insulated, Bare CN Cable;" Material Standard; SCL

6020.05; "28 KV, 3/C, TRXLPE Insulated, Tape Shielded Cable with Ground Connectors;" Material Standard; SCL

6020.06; "28 KV, 1/C, TRXLPE Insulated, Jacketed CN Cable;" Material Standard; SCL

6020.07; "28 kV, 1/C, TRXLPE Insulated, Flat Strap Shielded Cable;" Material Standard; SCL

6020.14; "28 KV, 1/C, TRXLPE Insulated, Flat Strap Shielded Cable;" Material Standard; SCL

6025.10; "15 KV, 3/C, EPR Insulated, Tape Shielded Cable;" Material Standard; SCL

6025.60; "15 kV, 3-1/C, EPR Insulated, Flat Strap Shielded Cable;" Material Standard; SCL

6025.70; "15 kV, 1/C, EPR Insulated, Tape Shielded Cable;" Material Standard; SCL

6236.60; "35 KV, 1/C, TRXLPE Insulated, Tape Shielded Cable;" Material Standard; SCL

9271.05; "Cable Pulling Engineering Fundamentals;" Design Standard; SCL

E6-1.0/NGE-70; "Properties of Medium Voltage Cables;" Construction Guideline; SCL

Shipek, John; SCL Standards Engineer, subject matter expert, and originator of 9660.04 (john.shipek@seattle.gov)

U1-4.11/NCI-60; "Cable Pulling Calculations: Maximum Pulling Tensions;" Construction Guideline; SCL

ELECTRICAL PROPERTIES OF MEDIUM VOLTAGE CABLES

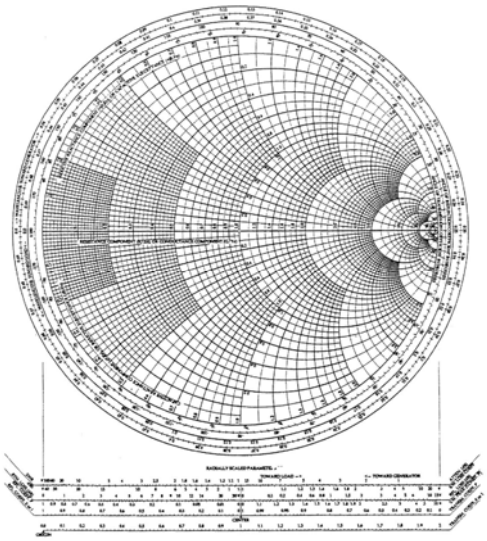

1. Scope

This standard presents in a convenient format the highly-specialized electrical properties of the medium voltage cables used to construct Seattle City Light's underground distribution system. These electrical properties include:

- Conductor resistance
- Shield resistance
- Capacitance
- Suseptance
- Charging current
- Single phase reactance
- Three phase reactance
- Dielectric losses
- Electrical stress
- Insulation resistance

Basic *physical* properties of medium voltage cable are outside the scope of this standard.

Underground transmission and 600 volt cables are outside the scope of this standard.

2. Application

This standard provides engineers with the specialized data required by computer programs such as etap to perform load flow and short circuit analyses. If some of the text is too small to accurately read in printed paper form, try viewing online.

Refer to Construction Guideline NCI-200 for the sequence impedances of cables Stock Numbers 613523, 613526, 613530, 613532, 613534, 623670, 613540, and 613543.

Refer to Design Standard 9660.04 for the basic *physical* properties of medium voltage cable.

Refer to Design Standard 9650.05 for the electrical properties of 600 volt cable.

3. Electrical Properties

Stock number	page
012098	2-3
012101	4-5
012102	6-7
602025	8-9
623640	10-11
623670	12-13

standards coordinator	standards supervisor	unit director
John Shipek	John Shipek	Darnell Cola

General Cable

BICC BRAND

Drawing / Data Sheet

[SCL Stock Number 012098]

Single Conductor EmPowr® Link Concentric Neutral (Round Wire) Power Cable 28kV

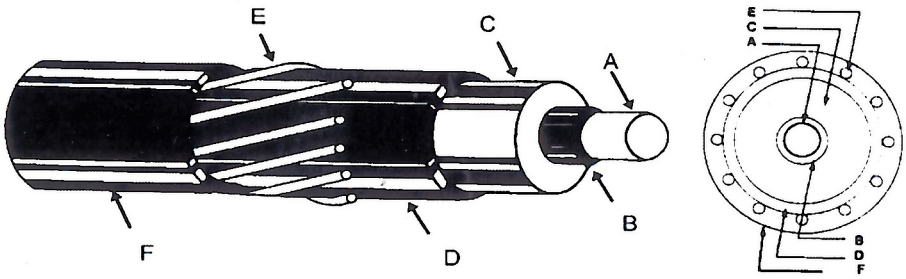

Representative drawing not to scale

Component Description	Thickness (inches) Min.	Thickness (inches) Nom.*	Thickness (inches) Max.	Diameter (inches) Min.	Diameter (inches) Nom.*	Diameter (inches) Max.
A: Conductor 1/0 AWG Solid Strand AL Conductor	--	--	--	0.318	0.325	0.331
B: Conductor Shield Semiconducting Thermoset Polymer	0.012	0.018	--	--	0.361	--
C: Insulation **Insulation Level** Tree Retardant Crosslinked Polyethylene 100%	0.265	0.285	0.310	0.880	0.930	0.970
D: Insulation Shield Semiconducting Thermoset Polymer	0.030	0.035	0.060	0.940	1.000	1.070
E: Concentric Neutral / Metallic Shield 16 x 14 AWG Bare Copper Round Wire	--	--	--	--	1.116	--
F: Jacket Extruded-To-Fill Linear Low Density Polyethylene	0.045	0.077	0.080	--	1.270	1.350
Single Conductor Finished Cable Nominal Weight: 776 lb/kft *						

* - Nominal Values are Subject to Manufacturing Tolerances; Bold Font Indicates Minimum Average Values

Customer:	SEATTLE CITY LIGHT	**Customer P/N:** 12098	**EA/PC Number:** 12098 Rev. 0
Specification / Standard:	E6-1.0/NGE-70 Date: 01/25/08	**Prepared By:** HQQUJJB	**Date:** 1/18/2011

This document was prepared for a specific purpose and the recipient, by accepting this information, assumes custody and control and agrees to take reasonable precautions that (a) this document will not be copied or reproduced, in whole or in part, or its contents revealed in any manner to any person, except to meet the specific purpose for which the document was delivered, and (b) that any features of this document will not be incorporated into any other projects without the express written permission of an officer of General Cable Corporation. This information has been calculated based on known formulae. The values are believed to be accurate and concise. Although they are mathematically derived, normal dimensional tolerances in actual cable construction and variations in the installation conditions may lead to differences between the indicated values and actual measured values.

General Cable

BICC BRAND

Electrical Characteristics

[SCL Stock Number 012098]

Single Conductor EmPowr® Link Concentric Neutral (Round Wire) Power Cable 28kV

Cable Description:	**1/0 AWG Solid Al, 0.285" TRXLPE, 16 / 14 AWG Cu, LLDPE**
Input Parameters:	Electrical Characteristics Based on Normal Operating Temperature: 90 °C IR Constant @ 60°F: 20000 Dielectric Constant: 2.35 Earth Resistivity: 100 Ω-m Dissipation Factor: 0.01 % Voltage (line to ground): 16.17 kV Conductor Center to Center Spacing (S): 1.27 in 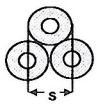 Trifoil Arrangement
Conductor Resistance:	Rdc @ 25°C: 0.1670 Ω/kft — 0.5479 Ω/km Rac @ 25°C: 0.1671 Ω/kft — 0.5481 Ω/km Rac @ 90°C: 0.2101 Ω/kft — 0.6894 Ω/km
Shield Resistance:	Rac @ 25°C: 0.170 Ω/kft — 0.559 Ω/km Rac @ 85°C: 0.210 Ω/kft — 0.689 Ω/km
Capacitance:	0.042 µF/kft — 0.138 µF/km
Shunt Capacitive Reactance/Susceptance:	Shunt Capacitive Reactance: 63029 Ω-kft — 19210 Ω-km Shunt Capacitive Susceptance: 15.87 µS/kft — 4.84 µS/km
Charging Current:	256.5 mA/kft — 841.7 mA/km
1-Phase Reactance/Impedance:	Inductive Reactance: 0.033 Ω/kft — 0.108 Ω/km Pos. & Neg. Seq. Impedance (Met. Shield): Real 0.210, Imag. 0.033, Impedance 0.213 Ω/kft — Real 0.689, Imag. 0.108, Impedance 0.698 Ω/km Zero Seq. Impedance (Earth & Met. Shield): Real 0.581, Imag. 0.321, Impedance 0.663 Ω/kft — Real 1.905, Imag. 1.053, Impedance 2.177 Ω/km
3-Phase Reactance/Impedance:	Inductive Reactance: 0.053 Ω/kft — 0.174 Ω/km Pos. & Neg. Seq. Impedance (Met. Shield): Real 0.212, Imag. 0.053, Impedance 0.219 Ω/kft — Real 0.696, Imag. 0.173, Impedance 0.717 Ω/km Zero Seq. Impedance (Earth & Met. Shield): Real 0.400, Imag. 0.087, Impedance 0.410 Ω/kft — Real 1.313, Imag. 0.284, Impedance 1.344 Ω/km Zero Seq. Impedance (Earth Only): Real 0.264, Imag. 0.755, Impedance 0.800 Ω/kft — Real 0.867, Imag. 2.477, Impedance 2.625 Ω/km Zero Seq. Impedance (Met. Shield Only): Real 0.420, Imag. 0.033, Impedance 0.421 Ω/kft — Real 1.378, Imag. 0.108, Impedance 1.382 Ω/km
Dielectric Losses: (Per Phase)	0.41 W/kft — 1.35 W/km
Electrical Stress:	Insulation Average: 56.84 V/mil — 186.48 kV/mm Conductor Shield - Insulation Interface Maximum: 94.60 V/mil — 310.39 kV/mm Insulation - Insulation Shield Interface Minimum: 36.72 V/mil — 120.49 kV/mm
Insulation Resistance:	8219.51 MΩ-kft — 2505.19 MΩ-km

Customer:	SEATTLE CITY LIGHT	**Customer P/N:** 12098	**EA/PC Number:** 12098 Rev. 0
Specification / Standard:	E6-1.0/NGE-70 Date: 01/25/08	**Prepared by:** HQQUJJB	**Date:** 1/18/2011

This document was prepared for a specific purpose and the recipient, by accepting this information, assumes custody and control and agrees to take reasonable precautions that (a) this document will not be copied or reproduced, in whole or in part, or its contents revealed in any manner to any person, except to meet the specific purpose for which the document was delivered, and (b) that any features of this document will not be incorporated into any other projects without the express written permission of an officer of General Cable Corporation. This information has been calculated based on known formulae. The values are believed to be accurate and concise. Although they are mathematically derived, normal dimensional tolerances in actual cable construction and variations in the installation conditions may lead to differences between the indicated values and actual measured values.

Utility Engineering Center
Tel: 859-572-8000

General Cable

BICC BRAND

Drawing / Data Sheet

[SCL Stock Number 012101]

Single Conductor EmPowr® Link BIFILL® Concentric Neutral (Flat Strap) Power Cable 28kV

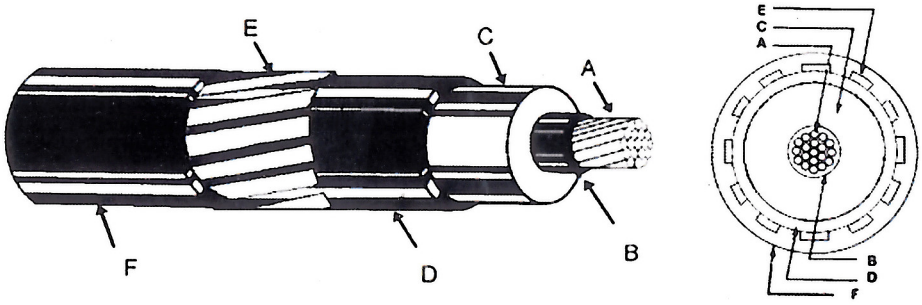

Representative drawing not to scale

Component Description	Thickness (inches) Min.	Nom.*	Max.	Diameter (inches) Min.	Nom.*	Max.
A: Conductor 750 kcmil Class B Compact Strand Filled CU Conductor	--	--	--	0.890	0.908	0.926
B: Conductor Shield Semiconducting Thermoset Polymer	0.020	0.026	--	--	0.960	--
C: Insulation **Insulation Level** Tree Retardant Crosslinked Polyethylene 100%	0.265	0.280	0.310	1.480	1.520	1.575
D: Insulation Shield Semiconducting Thermoset Polymer	0.024	0.030	0.060	1.530	1.580	1.665
E: Concentric Neutral / Metallic Shield 18 x 0.175 " x 0.025 " Bare Copper Flat Strap with Water Swellable Powder	--	0.025	--	--	1.630	--
F: Jacket Extruded-To-Fill Linear Low Density Polyethylene	0.070	0.080	0.120	--	1.790	2.000
Single Conductor Finished Cable Nominal Weight: 3450 lb/kft *						

* - Nominal Values are Subject to Manufacturing Tolerances; Bold Font Indicates Minimum Average Values

Customer:	SEATTLE CITY LIGHT	**Customer P/N:** 12101	**EA/PC Number:** 732331 Rev. 0
Specification / Standard:	6020.07 Date: 11/28/07	**Prepared By:** HQQUJJB	**Date:** 1/18/2011

This document was prepared for a specific purpose and the recipient, by accepting this information, assumes custody and control and agrees to take reasonable precautions that (a) this document will not be copied or reproduced, in whole or in part, or its contents revealed in any manner to any person, except to meet the specific purpose for which the document was delivered, and (b) that any features of this document will not be incorporated into any other projects without the express written permission of an officer of General Cable Corporation. This information has been calculated based on known formulae. The values are believed to be accurate and concise. Although they are mathematically derived, normal dimensional tolerances in actual cable construction and variations in the installation conditions may lead to differences between the indicated values and actual measured values.

General Cable

BICC BRAND

Electrical Characteristics

[SCL Stock Number 012101]

Single Conductor EmPowr® Link BIFILL® Concentric Neutral (Flat Strap) Power Cable 28kV

Cable Description:	**750 kcmil Cu, 0.280" TRXLPE, 18 / 0.175 " x 0.025 " Cu, LLDPE**
Input Parameters:	Electrical Characteristics Based on Normal Operating Temperature: 90 °C IR Constant @ 60°F: 20000 Dielectric Constant: 2.35 Earth Resistivity: 100 Ω-m Dissipation Factor: 0.01 % Voltage (line to ground): 16.17 kV Conductor Center to Center Spacing (S): 1.79 in 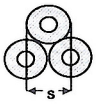 Trifoil Arrangement
Conductor Resistance:	Rdc @ 25°C: 0.0144 Ω/kft 0.0472 Ω/km Rac @ 25°C: 0.0152 Ω/kft 0.0498 Ω/km Rac @ 90°C: 0.0195 Ω/kft 0.0640 Ω/km
Shield Resistance:	Rac @ 25°C: 0.112 Ω/kft 0.367 Ω/km Rac @ 85°C: 0.138 Ω/kft 0.452 Ω/km
Capacitance:	0.087 µF/kft 0.284 µF/km
Shunt Capacitive Reactance/Susceptance:	Shunt Capacitive Reactance: 30607 Ω-kft 9329 Ω-km Shunt Capacitive Susceptance: 32.67 µS/kft 9.96 µS/km
Charging Current:	528.3 mA/kft 1733.4 mA/km
1-Phase Reactance/Impedance:	Inductive Reactance: 0.019 Ω/kft 0.062 Ω/km Real / Imag. / Impedance / Real / Imag. / Impedance Pos. & Neg. Seq. Impedance (Met. Shield): 0.019 0.019 0.027 Ω/kft 0.064 0.062 0.089 Ω/km Zero Seq. Impedance (Earth & Met. Shield): 0.324 0.187 0.374 Ω/kft 1.062 0.613 1.226 Ω/km
3-Phase Reactance/Impedance:	Inductive Reactance: 0.037 Ω/kft 0.123 Ω/km Real / Imag. / Impedance / Real / Imag. / Impedance Pos. & Neg. Seq. Impedance (Met. Shield): 0.022 0.037 0.043 Ω/kft 0.072 0.122 0.142 Ω/km Zero Seq. Impedance (Earth & Met. Shield): 0.150 0.044 0.157 Ω/kft 0.493 0.145 0.514 Ω/km Zero Seq. Impedance (Earth Only): 0.074 0.716 0.720 Ω/kft 0.242 2.349 2.361 Ω/km Zero Seq. Impedance (Met. Shield Only): 0.157 0.019 0.158 Ω/kft 0.516 0.062 0.519 Ω/km
Dielectric Losses: (Per Phase)	0.85 W/kft 2.79 W/km
Electrical Stress:	Insulation Average: 57.75 V/mil 189.48 kV/mm Conductor Shield - Insulation Interface Maximum: 73.26 V/mil 240.36 kV/mm Insulation - Insulation Shield Interface Minimum: 46.27 V/mil 151.81 kV/mm
Insulation Resistance:	3991.45 MΩ-kft 1216.53 MΩ-km

Customer:	SEATTLE CITY LIGHT	**Customer P/N:** 12101	**EA/PC Number:** 732331 Rev. 0
Specification / Standard:	6020.07 Date: 11/28/07	**Prepared by:** HQQUJJB	**Date:** 1/18/2011

This document was prepared for a specific purpose and the recipient, by accepting this information, assumes custody and control and agrees to take reasonable precautions that (a) this document will not be copied or reproduced, in whole or in part, or its contents revealed in any manner to any person, except to meet the specific purpose for which the document was delivered, and (b) that any features of this document will not be incorporated into any other projects without the express written permission of an officer of General Cable Corporation. This information has been calculated based on known formulae. The values are believed to be accurate and concise. Although they are mathematically derived, normal dimensional tolerances in actual cable construction and variations in the installation conditions may lead to differences between the indicated values and actual measured values.

General Cable

BICC BRAND

Drawing / Data Sheet

[SCL Stock Number 012102]

Single Conductor EmPowr® Link BIFILL® Concentric Neutral (Flat Strap) Power Cable 28kV

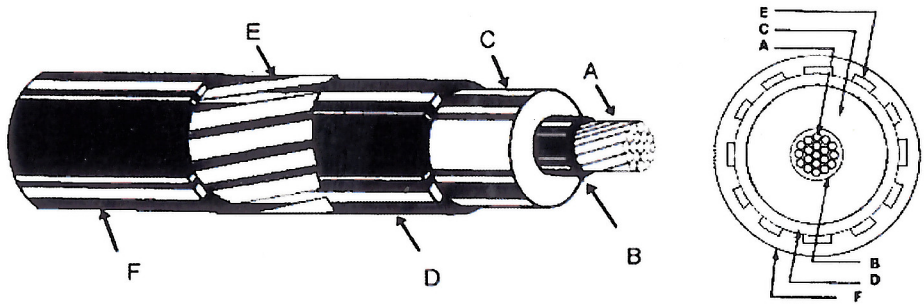

Representative drawing not to scale

Component Description	Thickness (inches) Min.	Nom.*	Max.	Diameter (inches) Min.	Nom.*	Max.
A: Conductor 1000 kcmil Class B Compact Strand Filled CU Conductor	--	--	--	1.039	1.060	1.081
B: Conductor Shield Semiconducting Thermoset Polymer	0.020	0.026	--	--	1.112	--
C: Insulation **Insulation Level** Tree Retardant Crosslinked Polyethylene 100%	0.265	0.280	0.310	1.630	1.672	1.725
D: Insulation Shield Semiconducting Thermoset Polymer	0.024	0.030	0.060	1.680	1.732	1.815
E: Concentric Neutral / Metallic Shield 24 x 0.175 " x 0.025 " Bare Copper Flat Strap with Water Swellable Powder	--	0.025	--	--	1.782	--
F: Jacket Extruded-To-Fill Linear Low Density Polyethylene	0.070	0.080	0.120	--	1.942	2.100
Single Conductor Finished Cable Nominal Weight: 4428 lb/kft *						

* - Nominal Values are Subject to Manufacturing Tolerances; Bold Font Indicates Minimum Average Values

Customer:	SEATTLE CITY LIGHT	**Customer P/N:** 12102	**EA/PC Number:** 630842 Rev. 0
Specification / Standard:	6020.07 Date: 11/28/07	**Prepared By:** WYQUEEW	**Date:** 6/29/2010

This document was prepared for a specific purpose and the recipient, by accepting this information, assumes custody and control and agrees to take reasonable precautions that (a) this document will not be copied or reproduced, in whole or in part, or its contents revealed in any manner to any person, except to meet the specific purpose for which the document was delivered, and (b) that any features of this document will not be incorporated into any other projects without the express written permission of an officer of General Cable Corporation. This information has been calculated based on known formulae. The values are believed to be accurate and concise. Although they are mathematically derived, normal dimensional tolerances in actual cable construction and variations in the installation conditions may lead to differences between the indicated values and actual measured values.

General Cable

BICC BRAND

Electrical Characteristics

[SCL Stock Number 012102]

Single Conductor EmPowr® Link BIFILL® Concentric Neutral (Flat Strap) Power Cable 28kV

Cable Description:	**1000 kcmil Cu, 0.280" TRXLPE, 24 / 0.175 " x 0.025 " Cu, LLDPE**
Input Parameters:	Electrical Characteristics Based on Normal Operating Temperature: 90 °C IR Constant @ 60°F: 20000 Dielectric Constant: 2.35 Earth Resistivity: 100 Ω-m Dissipation Factor: 0.01 % Voltage (line to ground): 16.17 kV Conductor Center to Center Spacing (S): 7.5 in 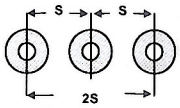 Flat Arrangement
Conductor Resistance:	Rdc @ 25°C: 0.0108 Ω/kft 0.0354 Ω/km Rac @ 25°C: 0.0118 Ω/kft 0.0387 Ω/km Rac @ 90°C: 0.0154 Ω/kft 0.0505 Ω/km
Shield Resistance:	Rac @ 25°C: 0.084 Ω/kft 0.275 Ω/km Rac @ 85°C: 0.103 Ω/kft 0.339 Ω/km
Capacitance:	0.098 µF/kft 0.320 µF/km
Shunt Capacitive Reactance/Susceptance:	Shunt Capacitive Reactance: 27166 Ω-kft 8280 Ω-km Shunt Capacitive Susceptance: 36.81 µS/kft 11.22 µS/km
Charging Current:	595.2 mA/kft 1953.0 mA/km
1-Phase Reactance/Impedance:	Inductive Reactance: 0.018 Ω/kft 0.058 Ω/km Pos. & Neg. Seq. Impedance (Met. Shield): Real 0.015, Imag. 0.018, Impedance 0.023 Ω/kft; Real 0.051, Imag. 0.058, Impedance 0.077 Ω/km Zero Seq. Impedance (Earth & Met. Shield): Real 0.270, Imag. 0.125, Impedance 0.298 Ω/kft; Real 0.887, Imag. 0.411, Impedance 0.977 Ω/km
3-Phase Reactance/Impedance:	Inductive Reactance: 0.072 Ω/kft 0.237 Ω/km Pos. & Neg. Seq. Impedance (Met. Shield): Real 0.038, Imag. 0.060, Impedance 0.071 Ω/kft; Real 0.125, Imag. 0.198, Impedance 0.234 Ω/km Zero Seq. Impedance (Earth & Met. Shield): Real 0.115, Imag. 0.034, Impedance 0.119 Ω/kft; Real 0.376, Imag. 0.111, Impedance 0.392 Ω/km Zero Seq. Impedance (Earth Only): Real 0.070, Imag. 0.636, Impedance 0.640 Ω/kft; Real 0.228, Imag. 2.086, Impedance 2.099 Ω/km Zero Seq. Impedance (Met. Shield Only): Real 0.119, Imag. 0.018, Impedance 0.120 Ω/kft; Real 0.389, Imag. 0.058, Impedance 0.394 Ω/km
Dielectric Losses: (Per Phase)	0.96 W/kft 3.14 W/km
Electrical Stress:	Insulation Average: 57.75 V/mil 189.48 kV/mm Conductor Shield - Insulation Interface Maximum: 71.26 V/mil 233.80 kV/mm Insulation - Insulation Shield Interface Minimum: 47.39 V/mil 155.49 kV/mm
Insulation Resistance:	3542.63 MΩ-kft 1079.74 MΩ-km

Customer:	SEATTLE CITY LIGHT	**Customer P/N:** 12102	**EA/PC Number:** 630842 Rev. 0
Specification / Standard:	6020.07 Date: 11/28/07	**Prepared by:** WYQUEEW	**Date:** 6/29/2010

This document was prepared for a specific purpose and the recipient, by accepting this information, assumes custody and control and agrees to take reasonable precautions that (a) this document will not be copied or reproduced, in whole or in part, or its contents revealed in any manner to any person, except to meet the specific purpose for which the document was delivered, and (b) that any features of this document will not be incorporated into any other projects without the express written permission of an officer of General Cable Corporation. This information has been calculated based on known formulae. The values are believed to be accurate and concise. Although they are mathematically derived, normal dimensional tolerances in actual cable construction and variations in the installation conditions may lead to differences between the indicated values and actual measured values.

Utility Engineering Center
Tel: 859-572-8000

General Cable

BICC BRAND

Drawing / Data Sheet

[SCL Stock Number 602025]

Single Conductor EmPowr® Link Concentric Neutral (Round Wire) Power Cable 28kV

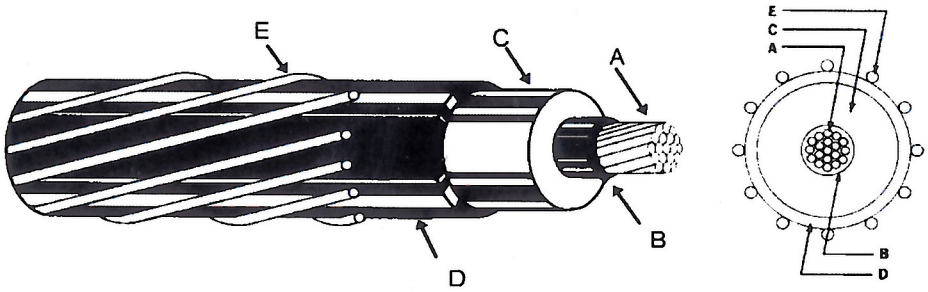

Representative drawing not to scale

Component Description	Thickness (inches) Min.	Thickness (inches) Nom.*	Thickness (inches) Max.	Diameter (inches) Min.	Diameter (inches) Nom.*	Diameter (inches) Max.
A: Conductor 1/0 AWG Solid Strand AL Conductor	--	--	--	0.318	0.325	0.331
B: Conductor Shield Semiconducting Thermoset Polymer	0.012	0.018	--	--	0.361	--
C: Insulation **Insulation Level** Tree Retardant Crosslinked Polyethylene 100%	0.265	0.285	0.310	0.880	0.930	0.970
D: Insulation Shield Semiconducting Thermoset Polymer	0.030	0.035	0.060	0.940	1.000	1.070
E: Concentric Neutral / Metallic Shield 16 x 14 AWG Bare Copper Round Wire	--	--	--	--	1.116	--
Single Conductor Finished Cable Nominal Weight: 604 lb/kft *						

* - Nominal Values are Subject to Manufacturing Tolerances; Bold Font Indicates Minimum Average Values

Customer:	SEATTLE CITY LIGHT	**Customer P/N:** 602025	**EA/PC Number:** 602025 Rev. 0
Specification / Standard:	E6-1.0/NGE-70 Date: 01/25/08	**Prepared By:** WYQUNXN	**Date:** 1/25/2011

This document was prepared for a specific purpose and the recipient, by accepting this information, assumes custody and control and agrees to take reasonable precautions that (a) this document will not be copied or reproduced, in whole or in part, or its contents revealed in any manner to any person, except to meet the specific purpose for which the document was delivered, and (b) that any features of this document will not be incorporated into any other projects without the express written permission of an officer of General Cable Corporation. This information has been calculated based on known formulae. The values are believed to be accurate and concise. Although they are mathematically derived, normal dimensional tolerances in actual cable construction and variations in the installation conditions may lead to differences between the indicated values and actual measured values.

General Cable

BICC BRAND

Electrical Characteristics

[SCL Stock Number 602025]

Single Conductor EmPowr® Link Concentric Neutral (Round Wire) Power Cable 28kV

Cable Description:	**1/0 AWG Solid Al, 0.285" TRXLPE, 16 / 14 AWG Cu**
Input Parameters:	**Electrical Characteristics Based on** **Normal Operating Temperature:** 90 °C **IR Constant @ 60°F:** 20000 **Dielectric Constant:** 2.35 **Earth Resistivity:** 100 Ω-m **Dissipation Factor:** 0.01 % **Voltage (line to ground):** 16.17 kV **Conductor Center to Center Spacing (S):** 1.116 in 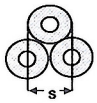 **Trifoil Arrangement**
Conductor Resistance:	**Rdc @ 25°C:** 0.1670 Ω/kft — 0.5479 Ω/km **Rac @ 25°C:** 0.1671 Ω/kft — 0.5481 Ω/km **Rac @ 90°C:** 0.2101 Ω/kft — 0.6894 Ω/km
Shield Resistance:	**Rac @ 25°C:** 0.170 Ω/kft — 0.559 Ω/km **Rac @ 85°C:** 0.210 Ω/kft — 0.689 Ω/km
Capacitance:	0.042 µF/kft — 0.138 µF/km
Shunt Capacitive Reactance/Susceptance:	**Shunt Capacitive Reactance:** 63029 Ω-kft — 19210 Ω-km **Shunt Capacitive Susceptance:** 15.87 µS/kft — 4.84 µS/km
Charging Current:	256.5 mA/kft — 841.7 mA/km
1-Phase Reactance/Impedance:	**Inductive Reactance:** 0.033 Ω/kft — 0.108 Ω/km **Real / Imag. / Impedance** — **Real / Imag. / Impedance** **Pos. & Neg. Seq. Impedance (Met. Shield):** 0.210 / 0.033 / 0.213 Ω/kft — 0.689 / 0.108 / 0.698 Ω/km **Zero Seq. Impedance (Earth & Met. Shield):** 0.581 / 0.321 / 0.663 Ω/kft — 1.905 / 1.053 / 2.177 Ω/km
3-Phase Reactance/Impedance:	**Inductive Reactance:** 0.050 Ω/kft — 0.164 Ω/km **Real / Imag. / Impedance** — **Real / Imag. / Impedance** **Pos. & Neg. Seq. Impedance (Met. Shield):** 0.212 / 0.050 / 0.217 Ω/kft — 0.694 / 0.164 / 0.713 Ω/km **Zero Seq. Impedance (Earth & Met. Shield):** 0.401 / 0.086 / 0.410 Ω/kft — 1.314 / 0.283 / 1.345 Ω/km **Zero Seq. Impedance (Earth Only):** 0.264 / 0.761 / 0.806 Ω/kft — 0.867 / 2.497 / 2.643 Ω/km **Zero Seq. Impedance (Met. Shield Only):** 0.420 / 0.033 / 0.421 Ω/kft — 1.378 / 0.108 / 1.382 Ω/km
Dielectric Losses: (Per Phase)	0.41 W/kft — 1.35 W/km
Electrical Stress:	**Insulation Average:** 56.84 V/mil — 186.48 kV/mm **Conductor Shield - Insulation Interface Maximum:** 94.60 V/mil — 310.39 kV/mm **Insulation - Insulation Shield Interface Minimum:** 36.72 V/mil — 120.49 kV/mm
Insulation Resistance:	8219.51 MΩ-kft — 2505.19 MΩ-km

Customer:	SEATTLE CITY LIGHT	**Customer P/N:** 602025	**EA/PC Number:** 602025 Rev. 0
Specification / Standard:	E6-1.0/NGE-70 Date: 01/25/08	**Prepared by:** WYQUNXN	**Date:** 1/25/2011

This document was prepared for a specific purpose and the recipient, by accepting this information, assumes custody and control and agrees to take reasonable precautions that (a) this document will not be copied or reproduced, in whole or in part, or its contents revealed in any manner to any person, except to meet the specific purpose for which the document was delivered, and (b) that any features of this document will not be incorporated into any other projects without the express written permission of an officer of General Cable Corporation. This information has been calculated based on known formulae. The values are believed to be accurate and concise. Although they are mathematically derived, normal dimensional tolerances in actual cable construction and variations in the installation conditions may lead to differences between the indicated values and actual measured values.

Utility Engineering Center
Tel: 859-572-8000

General Cable

BICC BRAND

Drawing / Data Sheet

[SCL Stock Number 623640]

Single Conductor EmPowr® Fill STRANDFILL® Shielded (Copper Tape) Power Cable 15kV

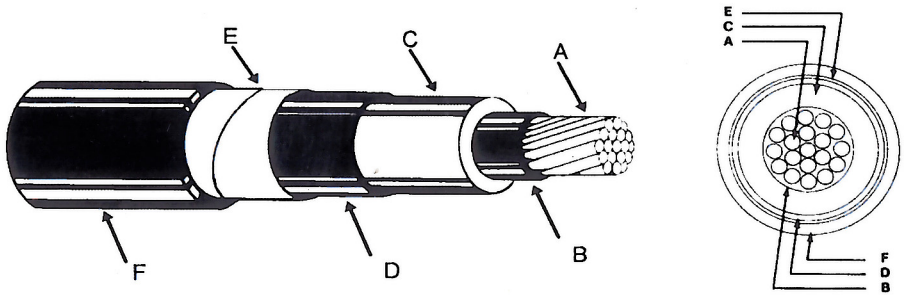

Representative drawing not to scale

Component Description	Thickness (inches) Min.	Nom.*	Max.	Diameter (inches) Min.	Nom.*	Max.
A: Conductor 500 kcmil Class B Compact Strand Filled CU Conductor	--	--	--	0.721	0.736	0.751
B: Conductor Shield Semiconducting Thermoset Polymer	0.016	0.022	--	--	0.780	--
C: Insulation **Insulation Level** Ethylene Propylene Rubber 100%	0.165	0.190	0.205	1.130	1.160	1.190
D: Insulation Shield Semiconducting Thermoset Polymer	0.024	0.030	0.060	1.180	1.220	1.280
E: Concentric Neutral / Metallic Shield 1 x 1.5 " x 0.005 " Bare Copper Tape	--	0.005	--	--	1.234	--
F: Jacket Overlaying Polyvinyl Chloride	0.070	0.080	0.105	--	1.394	1.600

Single Conductor Finished Cable Nominal Weight: 2263 lb/kft *

* - Nominal Values are Subject to Manufacturing Tolerances; Bold Font Indicates Minimum Average Values

Customer:	SEATTLE CITY LIGHT	**Customer P/N:** 623640	**EA/PC Number:** 623640 Rev. 0
Specification / Standard:	E6-1.0/NGE-70 Date: 01/25/08	**Prepared By:** HQQUJJB	**Date:** 1/18/2011

This document was prepared for a specific purpose and the recipient, by accepting this information, assumes custody and control and agrees to take reasonable precautions that (a) this document will not be copied or reproduced, in whole or in part, or its contents revealed in any manner to any person, except to meet the specific purpose for which the document was delivered, and (b) that any features of this document will not be incorporated into any other projects without the express written permission of an officer of General Cable Corporation. This information has been calculated based on known formulae. The values are believed to be accurate and concise. Although they are mathematically derived, normal dimensional tolerances in actual cable construction and variations in the installation conditions may lead to differences between the indicated values and actual measured values.

General Cable

BICC BRAND

Electrical Characteristics

[SCL Stock Number 623640]

Single Conductor EmPowr® Fill STRANDFILL® Shielded (Copper Tape) Power Cable 15kV

Cable Description:	**500 kcmil Cu, 0.190" EPR, 1 / 0.005 " Cu, PVC**
Input Parameters:	**Electrical Characteristics Based on** **Normal Operating Temperature:** 105 °C **IR Constant @ 60°F:** 20000 **Dielectric Constant:** 2.45 **Earth Resistivity:** 100 Ω-m **Dissipation Factor:** 0.345 % **Voltage (line to ground):** 8.66 kV **Conductor Center to Center Spacing (S):** 1.394 in 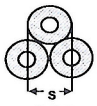 **Trifoil Arrangement**
Conductor Resistance:	**Rdc @ 25°C:** 0.0216 Ω/kft — 0.0708 Ω/km **Rac @ 25°C:** 0.0221 Ω/kft — 0.0726 Ω/km **Rac @ 105°C:** 0.0293 Ω/kft — 0.0962 Ω/km
Shield Resistance:	**Rac @ 25°C:** 1.864 Ω/kft — 6.117 Ω/km **Rac @ 100°C:** 2.403 Ω/kft — 7.885 Ω/km
Capacitance:	0.105 µF/kft — 0.343 µF/km
Shunt Capacitive Reactance/Susceptance:	**Shunt Capacitive Reactance:** 25355 Ω-kft — 7728 Ω-km **Shunt Capacitive Susceptance:** 39.44 µS/kft — 12.02 µS/km
Charging Current:	341.5 mA/kft — 1120.6 mA/km
1-Phase Reactance/Impedance:	**Inductive Reactance:** 0.018 Ω/kft — 0.059 Ω/km **Pos. & Neg. Seq. Impedance (Met. Shield):** Real 0.029, Imag. 0.018, Impedance 0.034 Ω/kft — Real 0.096, Imag. 0.058, Impedance 0.113 Ω/km **Zero Seq. Impedance (Earth & Met. Shield):** Real 0.160, Imag. 0.756, Impedance 0.773 Ω/kft — Real 0.527, Imag. 2.481, Impedance 2.536 Ω/km
3-Phase Reactance/Impedance:	**Inductive Reactance:** 0.037 Ω/kft — 0.120 Ω/km **Pos. & Neg. Seq. Impedance (Met. Shield):** Real 0.029, Imag. 0.037, Impedance 0.047 Ω/kft — Real 0.097, Imag. 0.120, Impedance 0.154 Ω/km **Zero Seq. Impedance (Earth & Met. Shield):** Real 0.265, Imag. 0.648, Impedance 0.700 Ω/kft — Real 0.870, Imag. 2.125, Impedance 2.296 Ω/km **Zero Seq. Impedance (Earth Only):** Real 0.083, Imag. 0.732, Impedance 0.737 Ω/kft — Real 0.274, Imag. 2.403, Impedance 2.418 Ω/km **Zero Seq. Impedance (Met. Shield Only):** Real 2.432, Imag. 0.018, Impedance 2.433 Ω/kft — Real 7.981, Imag. 0.058, Impedance 7.981 Ω/km
Dielectric Losses: (Per Phase)	10.15 W/kft — 33.30 W/km
Electrical Stress:	**Insulation Average:** 45.58 V/mil — 149.54 kV/mm **Conductor Shield - Insulation Interface Maximum:** 55.91 V/mil — 183.44 kV/mm **Insulation - Insulation Shield Interface Minimum:** 37.60 V/mil — 123.35 kV/mm
Insulation Resistance:	3447.27 MΩ-kft — 1050.68 MΩ-km

Customer:	SEATTLE CITY LIGHT	**Customer P/N:** 623640	**EA/PC Number:** 623640 Rev. 0
Specification / Standard:	E6-1.0/NGE-70 Date: 01/25/08	**Prepared by:** HQQUJJB	**Date:** 1/18/2011

This document was prepared for a specific purpose and the recipient, by accepting this information, assumes custody and control and agrees to take reasonable precautions that (a) this document will not be copied or reproduced, in whole or in part, or its contents revealed in any manner to any person, except to meet the specific purpose for which the document was delivered, and (b) that any features of this document will not be incorporated into any other projects without the express written permission of an officer of General Cable Corporation. This information has been calculated based on known formulae. The values are believed to be accurate and concise. Although they are mathematically derived, normal dimensional tolerances in actual cable construction and variations in the installation conditions may lead to differences between the indicated values and actual measured values.

Utility Engineering Center
Tel: 859-572-8000

General Cable

BICC BRAND

Drawing / Data Sheet

[SCL Stock Number 623670]

3x1/C Triplex EmPowr® Fill STRANDFILL® Concentric Neutral (Flat Strap) Power Cable 15kV

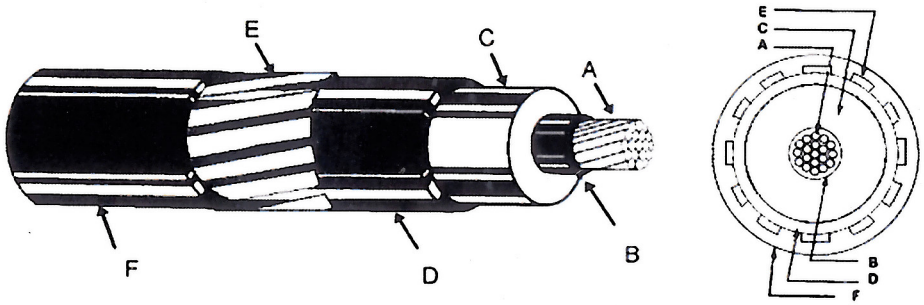

Representative drawing not to scale

Component Description	Thickness (inches) Min.	Nom.*	Max.	Diameter (inches) Min.	Nom.*	Max.
A: Conductor 1000 kcmil Class B Compressed Strand Filled CU Conductor	--	--	--	1.095	1.117	1.139
B: Conductor Shield Semiconducting Thermoset Polymer	0.020	0.027	--	--	1.171	--
C: Insulation **Insulation Level** Ethylene Propylene Rubber 100%	0.165	0.185	0.205	1.520	1.540	1.580
D: Insulation Shield Semiconducting Thermoset Polymer	0.024	0.030	0.060	1.570	1.600	1.670
E: Concentric Neutral / Metallic Shield 20 x 0.175 " x 0.025 " Bare Copper Flat Strap	--	0.025	--	--	1.650	--
F: Jacket Extruded-To-Fill Linear Low Density Polyethylene	0.070	0.080	0.120	--	1.810	1.600
3x1/C Triplex Finished Cable Nominal Weight: 12811 lb/kft *						

* - Nominal Values are Subject to Manufacturing Tolerances; Bold Font Indicates Minimum Average Values

Customer:	SEATTLE CITY LIGHT	**Customer P/N:** 623670	**EA/PC Number:** 623670 Rev. 0
Specification / Standard:	E6-1.0/NGE-70 Date: 01/25/08	**Prepared By:** HQQUJJB	**Date:** 1/18/2011

This document was prepared for a specific purpose and the recipient, by accepting this information, assumes custody and control and agrees to take reasonable precautions that (a) this document will not be copied or reproduced, in whole or in part, or its contents revealed in any manner to any person, except to meet the specific purpose for which the document was delivered, and (b) that any features of this document will not be incorporated into any other projects without the express written permission of an officer of General Cable Corporation. This information has been calculated based on known formulae. The values are believed to be accurate and concise. Although they are mathematically derived, normal dimensional tolerances in actual cable construction and variations in the installation conditions may lead to differences between the indicated values and actual measured values.

General Cable

BICC BRAND

Electrical Characteristics

[SCL Stock Number 623670]

3x1/C Triplex EmPowr® Fill STRANDFILL® Concentric Neutral (Flat Strap) Power Cable 15kV

Cable Description:	**1000 kcmil Cu, 0.185" EPR, 20 / 0.175 " x 0.025 " Cu, LLDPE**
Input Parameters:	Electrical Characteristics Based on Normal Operating Temperature: 105 °C IR Constant @ 60°F: 20000 Dielectric Constant: 2.45 Earth Resistivity: 100 Ω-m Dissipation Factor: 0.345 % Voltage (line to ground): 8.66 kV Conductor Center to Center Spacing (S): 1.81 in 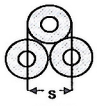 Trifoil Arrangement
Conductor Resistance:	Rdc @ 25°C: 0.0108 Ω/kft — 0.0354 Ω/km Rac @ 25°C: 0.0118 Ω/kft — 0.0387 Ω/km Rac @ 105°C: 0.0161 Ω/kft — 0.0529 Ω/km
Shield Resistance:	Rac @ 25°C: 0.101 Ω/kft — 0.330 Ω/km Rac @ 100°C: 0.130 Ω/kft — 0.426 Ω/km
Capacitance:	0.152 µF/kft — 0.497 µF/km
Shunt Capacitive Reactance/Susceptance:	Shunt Capacitive Reactance: 17500 Ω-kft — 5334 Ω-km Shunt Capacitive Susceptance: 57.14 µS/kft — 17.42 µS/km
Charging Current:	494.9 mA/kft — 1623.6 mA/km
1-Phase Reactance/Impedance:	Inductive Reactance: 0.015 Ω/kft — 0.048 Ω/km Pos. & Neg. Seq. Impedance (Met. Shield): Real 0.016, Imag. 0.015, Impedance 0.022 Ω/kft — Real 0.053, Imag. 0.048, Impedance 0.071 Ω/km Zero Seq. Impedance (Earth & Met. Shield): Real 0.311, Imag. 0.168, Impedance 0.353 Ω/kft — Real 1.020, Imag. 0.551, Impedance 1.159 Ω/km
3-Phase Reactance/Impedance:	Inductive Reactance: 0.033 Ω/kft — 0.108 Ω/km Pos. & Neg. Seq. Impedance (Met. Shield): Real 0.019, Imag. 0.033, Impedance 0.038 Ω/kft — Real 0.061, Imag. 0.107, Impedance 0.123 Ω/km Zero Seq. Impedance (Earth & Met. Shield): Real 0.140, Imag. 0.037, Impedance 0.145 Ω/kft — Real 0.459, Imag. 0.122, Impedance 0.475 Ω/km Zero Seq. Impedance (Earth Only): Real 0.070, Imag. 0.711, Impedance 0.714 Ω/kft — Real 0.231, Imag. 2.332, Impedance 2.343 Ω/km Zero Seq. Impedance (Met. Shield Only): Real 0.146, Imag. 0.015, Impedance 0.147 Ω/kft — Real 0.478, Imag. 0.048, Impedance 0.481 Ω/km
Dielectric Losses: (Per Phase)	14.71 W/kft — 48.25 W/km
Electrical Stress:	Insulation Average: 46.94 V/mil — 154.00 kV/mm Conductor Shield - Insulation Interface Maximum: 53.96 V/mil — 177.04 kV/mm Insulation - Insulation Shield Interface Minimum: 41.03 V/mil — 134.62 kV/mm
Insulation Resistance:	2379.28 MΩ-kft — 725.17 MΩ-km

Customer:	SEATTLE CITY LIGHT	**Customer P/N:** 623670	**EA/PC Number:** 623670 Rev. 0
Specification / Standard:	E6-1.0/NGE-70 Date: 01/25/08	**Prepared by:** HQQUJJB	**Date:** 1/18/2011

This document was prepared for a specific purpose and the recipient, by accepting this information, assumes custody and control and agrees to take reasonable precautions that (a) this document will not be copied or reproduced, in whole or in part, or its contents revealed in any manner to any person, except to meet the specific purpose for which the document was delivered, and (b) that any features of this document will not be incorporated into any other projects without the express written permission of an officer of General Cable Corporation. This information has been calculated based on known formulae. The values are believed to be accurate and concise. Although they are mathematically derived, normal dimensional tolerances in actual cable construction and variations in the installation conditions may lead to differences between the indicated values and actual measured values.

Utility Engineering Center
Tel: 859-572-8000

4. References

9660.04; "Properties of 600 Volt Cables;" *Design Standard*; SCL

9650.05; "Electrical Properties of 600 Volt Cables, *Design Standard*; SCL

NCI-200; Network Primary Cable Sequence Impedances; *Network Construction Guidelines*, SCL

Shipek, John; SCL Standards Engineer, subject matter expert and originator of 9660.06 (john.shipek@seattle.gov)

www.generalcable.com

GROUNDING AND BONDING, FUNDAMENTALS AND DETAILED REQUIREMENTS

1. Scope

Sections 1 through 6 of this standard review grounding and bonding fundamentals and theory related to the design and construction of electric power systems. Section 7 of this standard provides detailed requirements for examples found in Seattle City Light's looped radial and/or network systems.

Low voltage circuits containing ground-fault circuit interrupters (GFCIs) are outside the scope of this standard.

Working (temporary) grounds are outside the scope of this standard.

Engineers are encouraged to review the reference documents cited in Section 8. Grounding and bonding is a vast subject. This standard does not purport to present all that there is to know.

2. Application

This standard is intended to be used by Seattle City Light engineers, construction crews, and other personnel to better understand the importance of and theory behind grounding and bonding.

Readers of this standard are encouraged to study the terms defined in Section 4. To this day, even subject matter experts sometimes confuse the subtle difference in meanings between grounding, bonding, ground, and neutral.

Grounding and bonding standards must be adhered to or serious personal injury to Seattle City Light employees or the general public could result.

3. Introduction

The safety of an electrical system is dependent on its grounding and bonding system. Because conductors, exposed metallic components, and surfaces can become energized in fractions of a second and since the human body can be irrevocably injured in that time by one-tenth of one ampere, it is critical that grounding and bonding systems be installed correctly.

National Electrical Safety Code (IEEE C2) Rule 96(C) requires that the system neutral be connected to grounding electrodes at each transformer and a minimum of four locations for each mile of line and additional locations in order to safeguard personnel. The system is intended to rely on a large number of grounding connections rather than the resistance to ground of any one grounding electrode.

Properly grounding the distribution system also contributes to power quality, life expectancy for system and customer equipment, and as a result, system reliability.

Grounding and bonding components work together to provide safety to personnel, but there are key differences between these concepts worth noting.

"Grounded" is defined as connected to or in contact with earth or connected to some extended conductive body that serves instead of the earth. The grounding system's purpose is to establish a voltage **reference point** for the system to prevent the line voltages from deviating past their rated value and to shunt serious voltage events (lightning, etc) to earth.

"Bonded" is defined as the electrical **interconnecting** of conductive parts, designed to maintain a common electrical potential. The bonding system's purpose is to safely return fault current back to its original source where it can be dissipated or used to trigger a protective device.

Seattle City Light provides a multi-point grounded distribution system throughout the service area. Properly and consistently bonding metallic components and system neutrals to this grounding system is important in order to safeguard personnel and the public.

standards coordinator	standards manager	unit director
Curtis Lu	John Shipek	Pamela S. Johnson

4. Definitions

Bonding: the electrical interconnecting of conductive parts, designed to maintain a common electrical potential. (NESC, 2007)

Bracket Grounding: a concept that assumed some level of protection can be achieved by working between two temporarily grounded spans. This method must be augmented with personal working grounds to match the safety provided by an equipotential zone.

Earth (ground) or Ground (earth): a theoretical point where the reference voltage is zero volts.

Equipotential Zone: a safe work zone created by the use of temporary grounding and bonding in order to reduce the danger of step and touch potentials.

Ground (conductor): a conductor used to carry fault current from the fault location back to the energy's source.

Grounded: connected to or in contact with earth or connected to some extended conductive body that serves instead of the earth. (NESC, 2007)

Ground Rod (or driven rod): one of the seven types of approved grounding electrodes listed in Section 9 of the NESC, Grounding Methods. Per the NESC, the rod must be at least eight feet long and one-half-inch in diameter.

High-Impedance Grounded Neutral Systems; Resistance Grounding: a grounding system that is designed to minimize current flow during a ground fault in order to maintain continuity of power. Instead of solidly grounding the neutral, a neutral-ground resistor is placed in series. This resistor limits current flow and prevents breakers from tripping in low voltage systems. The neutral-ground resistor is typically monitored in order to trigger an alarm in a fault condition. In this way, the system can be protected and faults resolved in an orderly fashion that minimizes outages.

from NEC 250.36 diagram

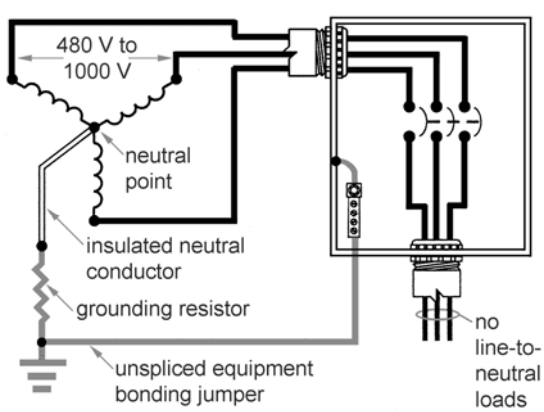

Multi-point grounded System: per NESC Section 9: Grounding Methods, a multi-grounded system shall have a sufficiently sized neutral that is connected at each transformer location and additional locations such that each mile of line is grounded at least at four points, ideally at least one point per quarter mile of line.

National Electrical Code (NEC): Article 250 Grounding and Bonding defines the philosophy enforced by the NEC. The NEC is primarily concerned with safeguarding the public and property. With this level of electrical knowledge in mind, NEC-compliant electrical systems are required to be solidly grounded in order to establish a voltage reference and shunt transients such as lightning to ground. When bonded per the NEC, these electrical systems use the grounded conductor or a dedicated grounding conductor to return faults back to their source, the main electrical service, in order to trip the breaker feeding the fault, thereby de-energizing the circuit and keeping the public safe.

National Electrical Safety Code (NESC): Section 9 Grounding Methods defines the philosophy enforced by the NESC. The NESC includes the safety of qualified electrical personnel as stated in Chapter 90 Purpose "…to provide practical methods of grounding, as one of the means of safeguarding employees and the public from injury… " In order to safeguard electrical workers, the NESC seeks to limit step and touch potentials while keeping circuits energized and maintaining the integrity of the utility electrical system.

Neutral (conductor): a conductor used to complete a circuit (single phase applications) or to return phase imbalance (three phase applications) back to the energy's source.

4. Definitions, continued

Single Point Grounding: electrical systems are typically grounded at a single point for each service and separately derived system in order to prevent fault current from traveling through a high-resistance path of earth back to the energy's source.

Step Potential (or step voltage): the potential difference between two points separated by a distance of one pace or one meter. This voltage could be dangerous when current flows through the earth or through material that a worker is standing on and then through the worker's legs, particularly under a fault condition. (IEEE 1048, 2003)

Touch Potential (or touch voltage): the potential difference between a grounded metallic structure and a point on the earth separated by a distance of maximum reach. This voltage could be dangerous when current flows from the structure to the earth via the worker, particularly when under a fault condition. (IEEE 1048, 2003)

UFER ground (concrete-encased electrode): a grounding electrode originally developed from 1942-1960 by Herbert G. Ufer during a series of Arizona pilot projects where soil conditions might have prevented standard ground rods from working. A metallic wire, rod, or structural shape, meeting Rule 93E5 and encased in concrete, that is not insulated from direct contact with earth, shall constitute an acceptable ground electrode. The concrete depth below grade shall be not less than 300 mm (1 ft), and a depth of 750 mm (2.5 ft) is recommended. Wire shall be no smaller than AWG No. 4 if copper, or 9 mm (3/8 in) diameter or AWG No. 1/0 if steel. It shall be not less than 6.1 m (20 ft) long, and shall remain entirely within the concrete except for the external connection. The conductor should be run as straight as practical. Concrete-encased electrodes are one of the seven types of grounding electrodes listed in NESC Section 9: Grounding Methods.

5. Fundamentals

Seattle City Light provides a multi-point grounded distribution system throughout the service area in order to set the system's reference voltage, safely and effectively guide fault current back to its source, and minimize step and touch potentials, thereby protecting electrical workers and the public. This system is composed of grounding electrodes along the distribution system that are bonded to the system neutral at multiple points, as well as grounding systems installed at individual transformers, services, and system components.

Seattle City Light bonds grounding electrodes and metallic components to the system neutral conductor. The system neutral provides a low resistance path that fault current can take back to its source in order to reduce harmful step and touch potentials. Current, whether in a normal condition or during a fault, will always try to return to its source. The statement "current takes the path of least resistance" is true, but tells only part of the story. It is more accurate to state that current will take any and all paths to return to its source. Further, when current travels back to its source, the amount of current that travels on each path back to the source is inversely proportional to the resistance of each path. Insuring that current has a low-resistance path back to its source is therefore critical.

6. General Requirements and Discussion

Engineers shall design and crews shall install components for the Seattle City Light distribution system that comply with this and all industry-established grounding and bonding requirements including the NESC in order to ensure the safety of both electrical workers and the general public.

The following pages of this Design Standard illustrate a few examples of Seattle City Light's intent to meet industry codes and standards in order to minimize step and touch potentials within and near distribution facilities.

7. Detailed Requirements and Discussion

7.1 Example, Handhole Lid

In this example excerpted from Construction Standard 0233.05, the metallic handhole lid is bonded to both the metal frame and the neutral in order to give fault current a low-resistance return path to its source.

If the handhole and lid were not bonded to the neutral, a deteriorated cable could come in contact with these metal components, causing them to be energized, and subjecting the public to dangerous touch potentials.

7.1a, handhole schematic

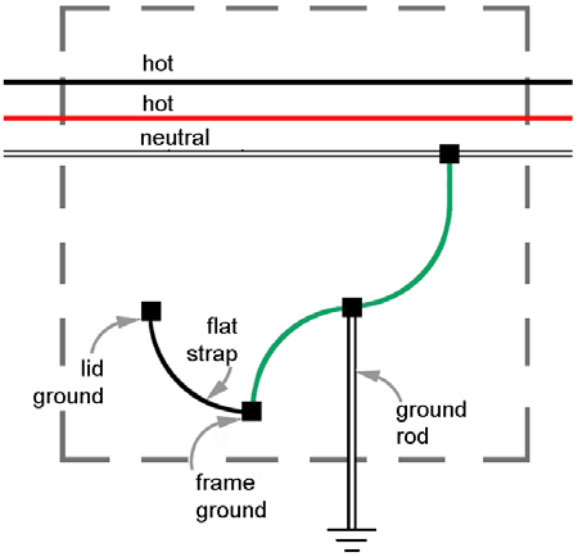

7.1b, handhole elevation

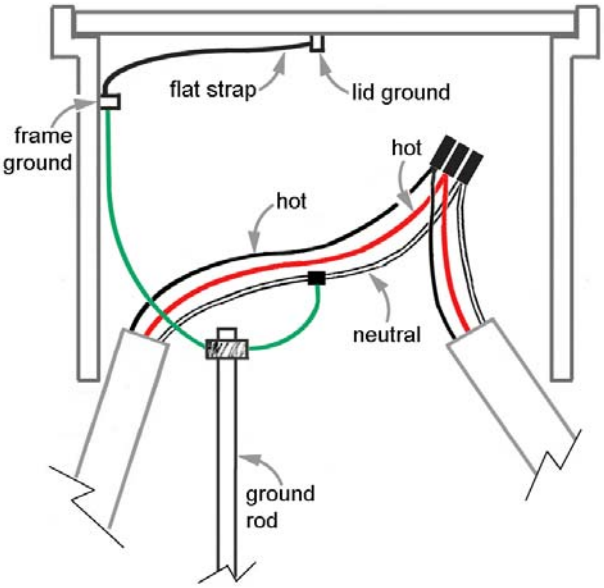

7. Detailed Requirements and Discussion, continued

7.2 Example, Overhead Single-Phase Transformer

In this example excerpted from Construction Standards D10-3.1 and D16-2, the transformer secondary winding neutral point is attached to bushing X2 which is connected via copper strap to a secondary ground lug. The neutral conductor starts at the X2 bushing, meets with the tank ground and continues down the pole to a ground rod. With these connections in place, fault current has a low-resistance return path to its source, the transformer secondary.

If the transformer was not bonded to the neutral, there would be no path for current to return and serious system imbalance and full line voltage on the secondary conductors would result.

7.2a, overhead transformer schematic

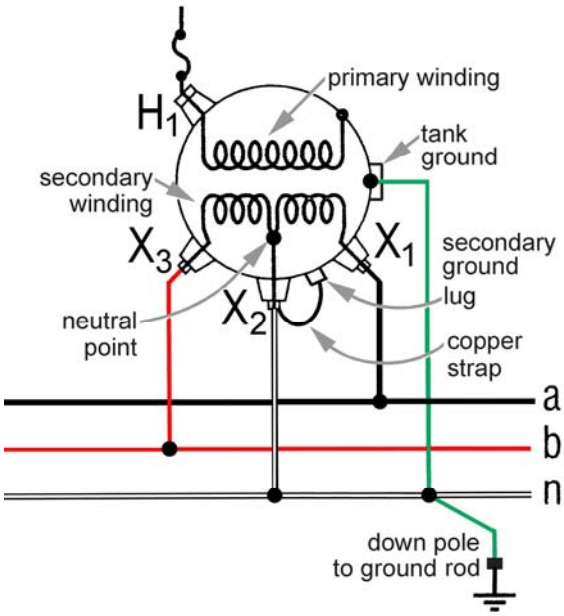

7.3 Example, Streetlight Base

In this example excerpted from Construction Standard 1710.50, the metallic pole base is bonded to both the metal handhole frame and the ground rod in order to give fault current a low-resistance return path to its source.

Typically the wiring will run through the streetlight base from an adjacent handhole. The ground, starting at a terminal lug in the base, will run to the handhole and will be bonded to the handhole frame, the handhole lid and to the ground rod.

7. Detailed Requirements and Discussion, continued

7.3 Example, Streetlight Base, continued

If the streetlight base was not connected to the ground conductor, a deteriorated cable could come in contact with base, causing it to become energized, subjecting the public to dangerous touch potentials.

For a typical streetlight circuit only one connection is made between the neutral and ground conductors. For the Looped Radial distribution system, this bond is at the first handhole – called the streetlight distribution handhole. For the Network distribution system, the neutral ground bond is made in the serving vault, ahead of the streetlight distribution handhole.

7.3a, streetlight base and handhole schematic

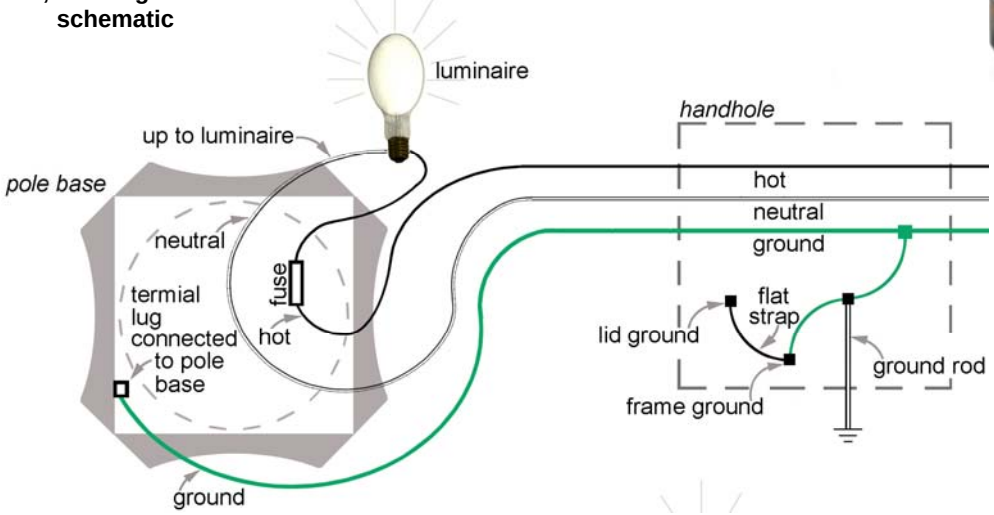

7.3b, streetlight base with adjacent handhole

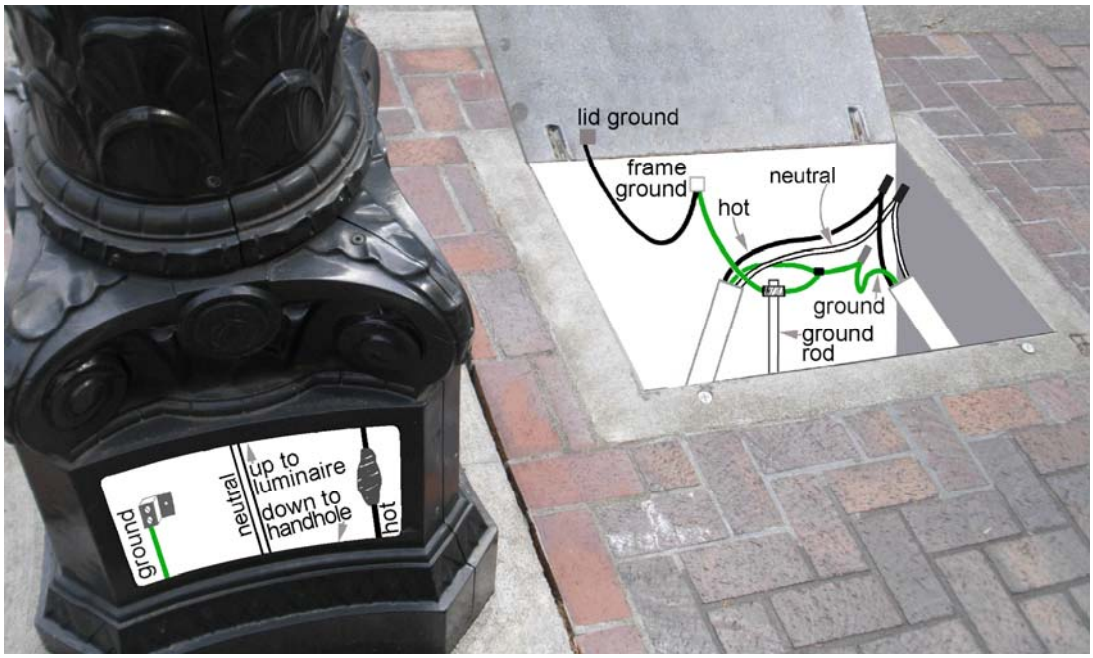

8. References

0233.05; "Secondary Handhole Grounding;" *Construction Standard*; SCL

1710.50; "Streetlight System Grounding and Bonding;" *Construction Standard*; SCL

Barnett, John; SCL Engineer; subject matter expert (john.barnett @seattle.gov)

Conference Paper No 04-A2, 0-7803-8298-6/04; "Distribution System Grounding Fundamentals, an Overview of Relationships Between Currents, Impedances, and Potentials;" authors: Edward S. Thomas, John B. Dagenhart, Richard A. Barber, and Allen L. Clapp; IEEE; 2004

D10-3.1; "Transformer Installation, Single Phase, 15/26 kV;" *Construction Guideline*; SCL

D16-2; "Grounding Rod Installation;" *Construction Guideline*; SCL

Deutscher, Cary; SCL Engineer; subject matter expert (cary.deutscher @seattle.gov)

Hanson, Brett; SCL Standards Engineer, subject matter expert and originator of 9702.30 (brett.hanson@seattle.gov)

IEEE 100-2000; *The Authoritative Dictionary of IEEE Standards Terms*; Seventh Edition; IEEE; 2000

IEEE 1048-2003; *Guide for Protective Grounding of Power Lines*; IEEE; 2003

IEEE C2-2007; National Electric Safety Code (NESC); 2007

Article 250, "Grounding and Bonding;" *NFPA 70 2008 Handbook*; National Electric Code (NEC); 2008

SL10-2 / NSL-50; cancelled; "Arterial and Residential Street Lighting, Installation Details for Anchor Base Aluminum Standard, Mast Arm Luminaire with PE Control"; Construction Guideline; SCL

Smalley, Edward; SCL Engineer, subject matter expert (edward.smalley@seattle.gov)

***Soares Book on Grounding and Bonding*;** International Association of Electrical Inspectors; 2004

FAULT CURRENT ALONG A REPRESENTATIVE 26 KV, LOOPED RADIAL FEEDER

1. Scope

This design standard presents fault current values along a representative Seattle City Light, 26 kV, looped radial feeder.

Methodology for calculating *actual* fault current along an actual feeder is outside the scope of this standard.

This standard also presents basic cautions about applying switchgear, fuses, and other equipment. Section 6 presents two simplified application examples.

2. Application

This standard is intended to be used by Seattle City Light engineers to better understand the magnitude of fault current available on a representative 26 kV, looped radial feeder and how available fault current affects the selection of switchgear, fuses, and other equipment.

Misapplication of electrical equipment by placing it in an electrical circuit where the available fault current is greater than the equipment's fault current withstand rating could lead to serious personal injury to Seattle City Light employees or the general public.

Engineers should avoid using any term that lacks a clear, verifiable definition. To this day, even subject matter experts sometimes confuse the subtle difference in meanings between terms.

3. Definitions

Fault withstand capability: The ability of electrical apparatus to withstand the effects of prescribed electrical fault current conditions without exceeding specified damage criteria.

Rated peak-withstand current: A measure of the switch's ability to withstand the magnetic forces associated with a short circuit. It is the maximum instantaneous current at the first major peak of an offset-rated power-frequency current, having a total duration of not less than 0.166 s, that the switch shall be required to carry when closed. The preferred peak withstand test duration is 167 milliseconds.

Rated short-time (symmetrical) withstand current: The rated short-time (symmetrical) withstand current is a measure of the switch's ability to withstand the heat generated by a short-time current. Preferred short-time test durations are 1, 2, or 3 seconds.

standards coordinator	standards manager	unit director
John Shipek	John Shipek	Pamela S. Johnson

4. Available Fault Current

The data populating Table 4.1 and Chart 4.1 was based on the following assumptions:

- Three-phase fault current at example substation bus is 30 kA
- Line-to-line bus voltage at example substation is 26.4 kV
- Overhead feeder consists of bare 954 kcmil, ASCR (Rail), Stock Number 600044, with a 4/0 AWG, covered aluminum neutral, Stock Number 600318
- Underground feeder consists of a single run per phase of 1000 kcmil copper cable, Stock Number 012102, with a 4/0 AWG covered copper neutral, Stock Number 613735
- All fault current values are RMS symmetrical
- The normal load capacity of an overhead feeder consisting of 954 kcmil ACSR is *not* equal to the normal load capacity of an underground feeder consisting of 1000 kcmil cable

Table 4.1, Fault Current along a Feeder

	100% Overhead Feeder		100% Underground Feeder	
Distance from station bus along feeder, miles	three-phase fault situation, current, kA	single-line-to-ground fault situation, current, kA	three-phase fault situation, current, kA	single-line-to-ground fault situation, current, kA
chart-legend	●	◆	■	▲
0.25 23.2		21.0	27.4	28.6
0.50 18.8		15.8	25.0	23.2
0.75 15.8		12.6	23.0	19.4
1.00 13.7		10.5	21.3	16.8
1.25	12.0	8.9	19.9	14.7
1.50	10.7	7.8	18.6	13.1
1.75	9.7	6.9	17.4	11.8
2.00	8.8	6.2	16.4	10.7
2.25	8.1	5.6	15.5	9.8

Chart 4.1, Fault Current along a Feeder

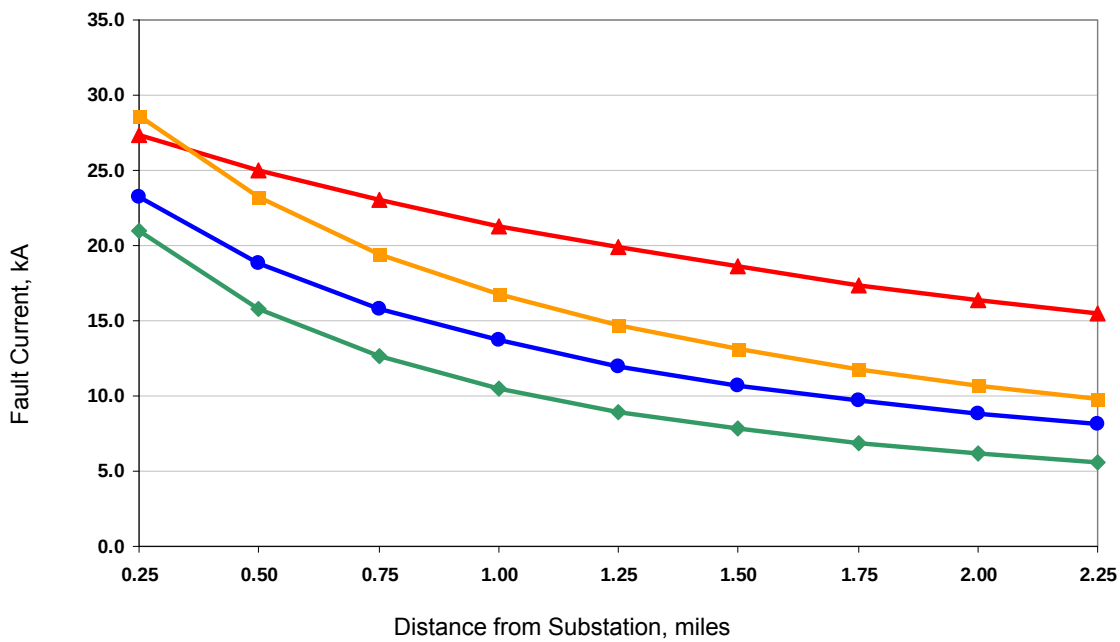

4. Available Fault Current, continued

The data populating Table 4.2 was based on the same assumptions as used for Table 4.1, except the underground feeder consists of a *double* run per phase of 1000 kcmil copper cable, Stock Number 012102.

Table 4.2, Fault current along a 100% underground feeder with a double run of cable per phase

	100% Underground Feeder	
distance from station bus along feeder, miles	three-phase fault-situation, current, kA	single-line-to-ground fault situation, current, kA
1.00 25.1		23.3

5. Discussion

Electrical equipment shall only be applied in an electrical circuit where the available fault current is less than the equipment's fault current withstand rating.

The majority of distribution class switchgear produced has a withstand rating of 25 kA or less. 12.5 kV is a very common fault withstand rating.

As can be seen from Chart 4.1, within 1/2-mile of the substation, Seattle City Light's fault duty generally exceeds the withstand rating of most switchgear.

This analysis may also be applied to fault interrupting capability.

6. Examples

The following examples are provided only to better understand certain aspects of applying equipment. Analysis of actual projects must be performed with actual, detailed data, and take into account other factors, such as:

- Ratings of the fuses installed within a switch
- Speed of upstream protective devices
- Plans to change the locations of normally-open switches
- Future load growth
- Future increases in available fault current

6.1 Applying an S&C Electric Vista switch 1.25 miles from a substation.

Given: A design engineer would like to install an S&C Electric Vista switch, Stock Number 012748, 1.25 miles from the substation, along a 100% underground feeder. Is this okay?

Analysis: From Material Standard 2501.65, it is learned that an S&C Electric Vista switch has a short-time (1 s) withstand current rating of 25 kA, rms symmetrical. From Table 4.1, it can be derived that the highest expected fault current for a 100% underground feeder, at 1.25 miles, is 19.9 kA rms symmetrical.

Conclusion: Yes, switch will not be misapplied from a fault withstand point of view.

6.2 Applying an S&C Electric PMH-9 switch 1.75 miles from a substation.

Given: A design engineer would like to install an S&C Electric PMH-9 switch, Stock Number 250190, 1.75 miles from the substation, along a 100% underground feeder. Is this okay?

Analysis: From Material Standard 2501.9, it is learned that power fuse mounting and interrupters in an S&C Electric PMH-9 switch have a short-circuit fault duty rating of 12.5 kA, rms symmetrical. From Table 4.1, it can be derived that the highest expected fault current for a 100% underground feeder, at 1.75 miles, is 17.4 kA rms symmetrical

Conclusion: No, the PMH-9 switch would be misapplied and the project must be redesigned.

7. References

100; "The Authoritative Dictionary of IEEE Standards Terms," Seventh Edition; IEEE; 2000

2501.65; "15.5 and 29 kV, Three-Phase, SF6, Multi-Purpose, Distributing Switchgear, Manually Controlled"; Material Standard; SCL

2501.9; "Switchgear, 27-kV, Three-Pole – Padmount"; Material Standard; SCL

C37.30; "Standard Requirements for High Voltage Switches"; IEEE; 1997

C37.32; "High Voltage Switches, Bus Supports, and Accessories Schedules of Preferred Ratings, Construction Guidelines, and Specifications"; ANSI; 2002

Newby, Lane; SCL Engineer and subject matter expert of 9752.10 (lane.newby@seattle.gov)

Shipek, John; SCL Engineer, subject matter expert, and co-originator of 9752.10 (john.shipek@.seattle.gov)

Siddiqi, Uzma; SCL Engineer, subject matter expert, and co-originator of 9752.10 (uzma.siddiqi@seattle.gov)