ONE INCH AT FULL SIZE		
REVISIONS		
REV	DATE	IMAGE
DRAWN BY:	CHECKED BY:	APPROVED BY:
WORK ORDER #:		
DESCRIPTION		

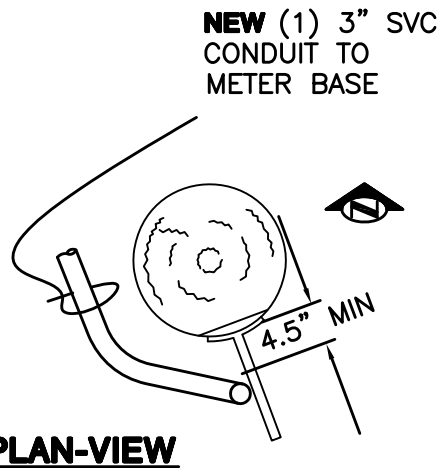

PLAN-VIEW
POWER POLE
NO SCALE

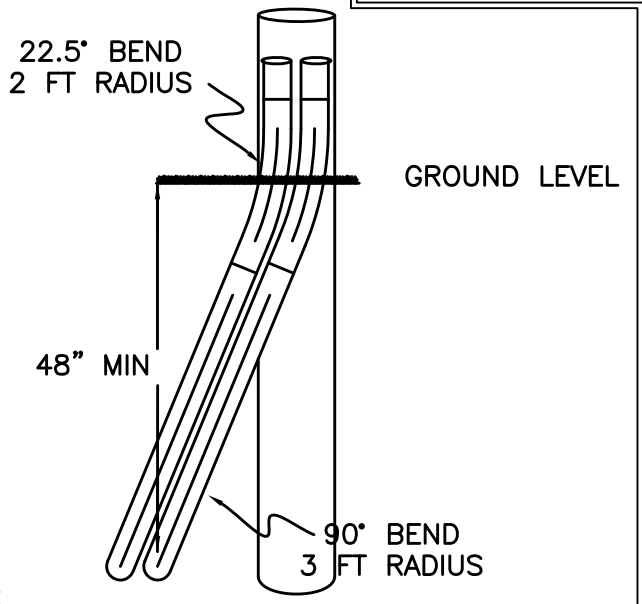

PROFILE VIEW
TYPICAL INSTALLATION
OF 22.5° KICK FOR 3" CONDUIT
NO SCALE

CONDUIT ON POLE (CONDUIT RISER)

1. LOWEST POLE–STANDOFF–BRACKET
   * INSTALL 9' ABOVE GROUND.
   * USE THREE (4"x1/2") LAG SCREWS.
   * ON SOUTH–FACE OF THE POLE
2. CONDUIT RISER
   * GALVANIZED RIGID STEEL FIRST 10'
   * 4.5" SPACING BETWEEN CONDUIT & POLE.
   * CONDUIT SHALL RISE VERTICALLY FROM TRENCH.
3. TAPE CONDUIT
   * TAPE 8" ABOVE AND BELOW THE GROUND LINE, USE VINYL PIPE WRAP TAPE ONLY.
4. ELBOW AT BASE OF POLE
   * GALVANIZED RIGID STEEL
   * 90° BEND MIN. 3' RADIUS
   * NO BEND ABOVE GRADE

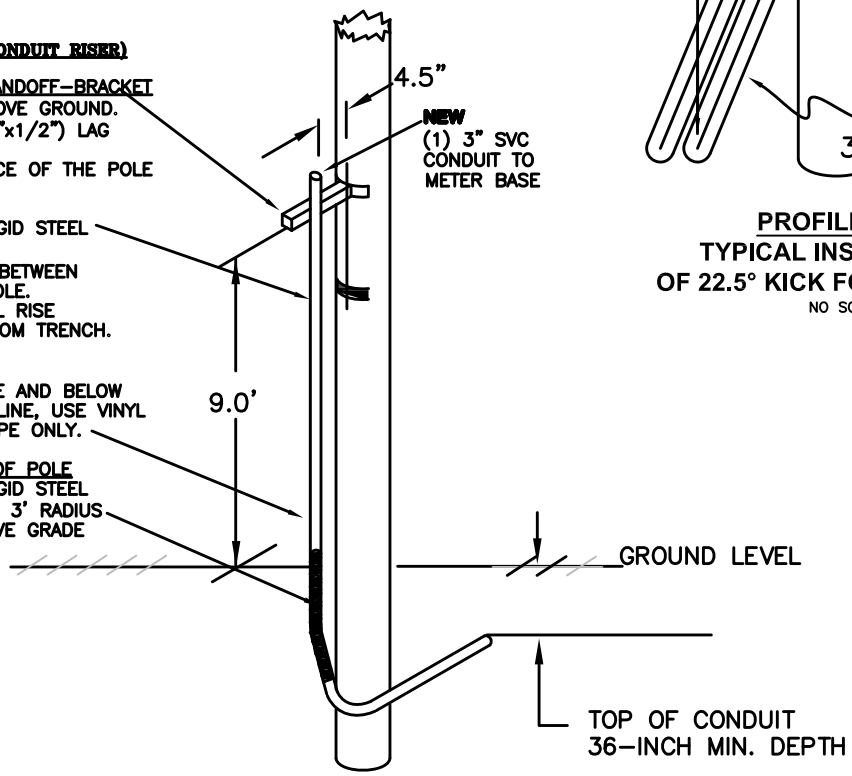

BIRD'S EYE VIEW
TYPICAL CONDUIT-RISER INSTALLATION
NO SCALE

THIS DRAWING IS THE PROPERTY OF THE CITY OF SEATTLE AND ITS SEATTLE CITY LIGHT DEPARTMENT. IT IS PRODUCED SOLELY FOR THE USE BY SEATTLE CITY LIGHT AND OTHER CITY DEPARTMENTS. THE USE, REPRODUCTION, AND TRANSFER OF THIS DRAWING AND/OR ANY INFORMATION CONTAINED IN THE DRAWING REQUIRES THE WRITTEN PERMISSION OF SEATTLE CITY LIGHT.

ENDORSEMENTS				
SIGNATURE	DATE	Seattle City Light Distribution Engineering	PROJECT TYPE	SHEET 1 OF 1
DRAWN:			PROJECT NAME	WORK ORDER NO.-TASK
CHECK:		APPROVED FOR SEATTLE CITY LIGHT	PROJECT ADDRESS	CITY
APPROVED:		PROJECT ENGINEER: MINH TA 615–1006 / SHEET CONTENTS	TYPICAL CONDUIT RISER INSTALLATION WITH 22-DEGREE KICK	DRAWING NO. / REV. NO. 0
		QUARTER/SECTION NUMBER(S) / SECTION / TOWNSHIP / RANGE		