ORDINANCE _____

AN ORDINANCE relating to the Seattle Fire Code, adopting as the Seattle Fire Code the 2009 edition of the International Fire Code with some exceptions, amending and adding various provisions to that code; amending Section 22.600.020 of the Seattle Municipal Code; and repealing Sections 2-426 of Ordinance 122491.

BE IT ORDAINED BY THE CITY OF SEATTLE AS FOLLOWS:

Section 1. The 2009 International Fire Code, along with Appendixes B, D, E, F, G, H, I, and J, as published by the International Code Council, Inc., one copy of which is filed with the City Clerk in Clerk File 310922, is hereby adopted by reference.

Section 2. Section 22.600.020 of the Seattle Municipal Code is amended as follows:

22.600.020 ((~~Adoption of the International~~)) <u>The Seattle</u> Fire Code

((~~The following is hereby adopted and by this reference made a part of this subtitle: ((2006))~~<u>2009</u> ~~International Fire Code with some exceptions, with Appendixes B, D, E, F,((and)) G, H, I, and J as published by the International Code Council, Inc., one copy of which is filed with the City Clerk in C.F. _____.~~))

The Seattle Fire Code consists of<u>:</u>

<u>1.</u> the ((~~2006~~))<u>2009</u> International Fire Code<u>,</u> ((~~with some exceptions, together~~)) <u>along with Appendices B, D, E, F, G, H, I, and J, all as published by the International Code Council, Inc., one copy of which is filed with the City Clerk in Clerk File 310922;</u>

<u>2.</u> ((~~with~~))the amendments ((~~and additions~~))<u>to the 2009 International Fire Code and to Appendices B, D, E, F, G, H, I, and J,</u> ((~~thereto~~)) adopted by Council by ordinance, <u>introduced as Council Bill 116918; and</u>

<u>3.</u> ((~~including~~))the standards referenced in Chapter ((~~45~~))<u>47</u> of the ((~~2006~~))<u>2009</u> International Fire Code, <u>including</u> ((~~as~~))those standards <u>added and NFPA Standards 58, 130, and 502 that are further</u>((~~as~~)) amended by Council by ((~~Ordinance~~))<u>ordinance, introduced as Council Bill 116918. One copy of each amended standard is on file with the City Clerk in Clerk Files 310924, 310925, and 310923.</u>

Wherever in this ordinance there is a conflict between metric units of measurement and English units, the English units govern.

Section 3. Chapter 1 of the 2009 International Fire Code is amended as follows:

Part 1—GENERAL PROVISIONS

SECTION 101
SCOPE AND GENERAL REQUIREMENTS

101.1 Title. These regulations shall be known as the *Seattle Fire Code* ((~~of [NAME OF JURISDICTION]~~)), hereinafter referred to as "this code."

Throughout this code, where references are made to the *International Building Code*, *International Residential Code*, *International Mechanical Code*, *International Fuel Gas Code*, and the *International Existing Building Code*, those references mean those codes with Seattle amendments. Where NFPA 70 is referenced, it means the *Seattle Electrical Code*, which is the *National Electrical Code* with Seattle amendments.

101.2 Scope. This code establishes regulations affecting or relating to structures, processes, premises, *motor vehicles*, *vessels*, and safeguards regarding:

1. The hazard of fire and explosion arising from the storage, handling or use of structures, materials or devices;
2. Conditions hazardous to life, property or public welfare in the occupancy of structures or premises;
3. Fire hazards in the structure or on the premises from occupancy or operation;
4. Matters related to the construction, extension, repair, alteration or removal of fire suppression or alarm systems; and
5. Conditions affecting the safety of fire fighters and emergency responders during emergency operations.

101.2.1 Appendices. Provisions in the appendices ((~~shall~~))do not apply unless specifically adopted.

101.3 Intent. The purpose of this code is to establish the minimum requirements consistent with nationally recognized good practice for providing a reasonable level of life safety and property protection from the hazards of fire, explosion or dangerous conditions in new and existing buildings, structures, ((~~and~~))premises, *motor vehicles*, and *vessels* and to provide safety to fire fighters and emergency responders during emergency operations.

This code is enacted as an exercise of the police power of the City of Seattle to protect the public peace, health, safety and welfare, and its provisions shall be liberally construed to accomplish these purposes. The express purpose of this code is to promote the health, safety and welfare of the general public, and not to create or otherwise establish or designate any particular class or

group of persons who will or should be especially protected or benefitted by the terms of this code or ordinance.

The specific intent of this code is to place the obligation of complying with its requirements upon the owners or occupiers of premises, buildings, *motor vehicles*, *vessels*, and structures within its scope. No provision or term used in this code is intended to impose any duty whatsoever upon the city, or any of its officers or employees, for whom the implementation or enforcement of this code is discretionary, not mandatory.

* * *

101.6 Point of information or code interpretation. Text marked "Point of Information" or "Code Interpretation" in the *Seattle Fire Code* is for guidance only and does not have the force of law.

SECTION 102
APPLICABILITY

102.1 Construction and design provisions. The construction and design provisions of this code ((~~shall~~))apply to:
1. Structures, facilities and conditions arising after the adoption of this code.
2. Existing structures, facilities and conditions not legally in existence at the time of adoption of this code. A condition is not "legally in existence at the time of adoption of this code" unless the condition is in compliance with the building code and fire code of the City of Seattle in effect when the condition first arose, and the practice, process, materials used and storage configurations have not changed since the condition first arose.
3. Existing structures, facilities and conditions when required in Chapter 46.
4. Existing structures, facilities and conditions which, in the opinion of the *fire code official*, constitute a distinct hazard to life or property.

* * *

102.5 Application of residential code. ((~~Where~~))If structures are designed and constructed in accordance with the *International Residential Code*, the provisions of this code ((~~shall~~))apply as follows:
1. Construction and design provisions: Provisions of this code pertaining to the exterior of the structure ((~~shall~~)) apply including, but not limited to, premises identification, fire apparatus access and water supplies. ((~~Where~~))If interior or exterior systems or devices are installed, ((~~construction~~))installation permits required by Section 105.7 of this code ((~~shall~~)) also apply.
2. Administrative, operational and maintenance provisions: All such provisions of this code ((~~shall~~)) apply.

* * *

102.7 Referenced codes and standards. The codes and standards referenced in this code shall be those that are listed in Chapter 47((~~5~~)), including amendments adopted by Council by ordinance, and such codes and standards shall be considered part of the requirements of this code to the prescribed extent of each such reference. Where differences occur between the provisions of this code and the referenced standards, the provisions of this code shall apply.

* * *

103.2 Appointment. ((~~The~~))A *fire code official*, other than the fire chief, shall be appointed by the chief appointing authority of the jurisdiction; and the *fire code official*, other than the fire chief, shall not be removed from office except for cause and after full opportunity to be heard on specific and relevant charges by and before the appointing authority.

* * *

103.4 Liability. Nothing contained in this code is intended to, nor shall be construed to, create or form the basis for any liability on the part of the city, its officers, employees or agents, for any injury or damage resulting from the failure of the owner or occupier of premises, buildings, structures, *motor vehicles* or *vessels*, to comply with this code, or for any injury or damage caused by any act or omission on the part of the city by its officers, employees or agents in the course of implementing or enforcing this code.

Any lawsuit brought against the city, or its officers, or employees because of acts or omissions in the implementation or enforcement of this code, or other pertinent laws, ordinances, or regulations implemented through the enforcement of this code or enforced by the *fire code official*, shall, as provided by Seattle Municipal Code chapter 4.64, be defended by the City, and any resulting judgment or settlement shall be assumed or paid by the City as provided by Chapter 4.64 and other relevant sections of the *Seattle Municipal Code*.

Limited public funds are available for the implementation and enforcement of this code. The issuance of permits, reviews of permit applications, and inspections conducted pursuant to this code are spot checks designed to encourage compliance, and are not representations, guarantees, or assurances that permits, or work undertaken pursuant to issuance of permits, comply with any applicable codes.

((~~The *fire code official*, member of the board of appeals, officer or employee charged with the enforcement of this code, while acting for the jurisdiction, in good faith and without malice in the discharge of the duties required by this code or other pertinent law or ordinance, shall not thereby be rendered liable personally, and is hereby relieved from all personal liability for any damage accruing to *persons* or property as a result of an act or by reason of an act or omission in the discharge of official duties.~~

~~**103.4.1 Legal defense.** Any suit instituted against any officer or employee because of an act performed by that officer or employee in the lawful discharge of duties and under the provisions of this code shall be defended by the legal representative of the jurisdiction until the final termination of the proceedings. The *fire code official* or any subordinate shall not be liable for costs in an action, suit or proceeding that is instituted in pursuance of the provisions of this code; and any officer of the department of fire prevention, acting in good faith and without malice, shall be free from liability for acts performed under any of its provisions or by reason of any act or omission in the performance of official duties in connection therewith.~~))

SECTION 104
GENERAL AUTHORITY AND RESPONSIBILITIES

104.1 General. The *fire code official* is hereby authorized to enforce the provisions of this code and shall have the authority to render interpretations of this code, and to adopt policies, procedures, rules and regulations in order to carry out the provisions of this code and clarify the application of its provisions. Such interpretations, policies, procedures, rules and regulations shall be in compliance with the intent and purpose of this code and shall not have the effect of waiving requirements specifically provided for in this code.

* * *

104.3 Right of entry. Whenever it is necessary to make an inspection to enforce the provisions of this code, or whenever the *fire code official* has reasonable cause to believe that there exists in a building or upon any premises any conditions or violations of this code which make the building or premises unsafe, dangerous or hazardous, the *fire code official* shall have the authority to enter the building or premises at all reasonable times to inspect or to perform the duties imposed upon the *fire code official* by this code. If such building or premises is occupied, the *fire code official* shall present credentials to the occupant and request entry. If such building or premises is unoccupied, the *fire code official* shall first make a reasonable effort to locate the *owner* or other *person* having charge or control of the building or premises and request entry. If entry is refused, the *fire code official* has recourse to every remedy provided by law to secure entry.

104.3.1 Owner consent. With the consent of the *owner* or occupier of a building, premises, *motor vehicle*, or *vessel*, or pursuant to a lawfully issued warrant, the *fire code official* may enter any building, premises, *motor vehicle*, or *vessel* at any reasonable time to inspect or to perform the duties authorized by this code.

104.3.((~~1~~))2 Warrant. ((~~When the *fire code official* has first obtained a proper inspection warrant or other remedy provided by law to secure entry, an~~))An *owner* or occupant or *person*

having charge, care or control of the building or premises shall not fail or neglect, after a warrant is presented,((~~proper request is made as herein provided,~~)) to permit entry therein by the *fire code official* for the purpose of inspection and examination pursuant to this code.

104.4 Identification. The *fire code official* shall carry proper identification when inspecting structures or premises in the performance of duties under this code.

104.5 Notices and orders. The *fire code official* is authorized to issue such notices or orders as are required to affect compliance with this code in accordance with Sections 109((~~.1 and 109.2~~)),110, and 111. The *fire code official* shall serve the responsible party with a copy of violations, correction letters, and orders issued.

104.6 Official records. The *fire code official* shall keep official records as required by Sections 104.6.1 through 104.6.4. Such official records shall be retained for not less than five years or for as long as the structure or activity to which such records relate remains in existence, unless otherwise provided by other laws or regulations.

104.6.1 Approvals. A record of approvals shall be maintained by the *fire code official* and shall be available for public inspection during business hours in accordance with applicable laws.

104.6.2 Inspections. The *fire code official* shall keep a record of ((~~each inspection made, including notices~~)) violations, correction letters, and orders issued, showing the findings and disposition of each.

104.6.3 Fire records. The fire department shall keep a record of fires occurring within its jurisdiction and of facts concerning the same, including statistics as to the extent of such fires and the damage caused thereby, together with other information as required by the *fire code official*.

104.6.4 Administrative. Application for modification, alternative methods or materials and the final decision of the *fire code official* on any such application shall be in writing and shall be officially recorded in the permanent records of the *fire code official*.

104.7 Approved materials and equipment. All *approved* materials, equipment and devices ((~~*approved* by the *fire code official*~~))shall be constructed and installed in accordance with such approval.

* * *

104.11.2 Obstructing operations. No *person* shall obstruct the operations of the fire department in connection with extinguishment, or control or investigation of any fire, or actions relative to other emergencies, or disobey any lawful command of the fire chief or officer of the

fire department in charge of the emergency, or any part thereof, or any lawful order of a police officer assisting the fire department.

* * *

104.12 Motor vehicle impoundment and removal. The *fire code official* may order the owner or operator to remove, or may request that the Seattle Police Department impound a *motor vehicle* under the following conditions:

1. The *motor vehicle* poses an immediate hazard to public safety; or
2. The *motor vehicle* is transporting hazardous materials, and is left unattended on a residential street or within 500 feet (152 400 mm) of any building containing a Group A, R, E or I occupancy, including, but not limited to, any dwelling apartment, hotel, day care, school, hospital or health care facility; or
3. The *motor vehicle* contains or is carrying hazardous materials, or flammable or combustible liquids or gases, and is left unattended while transferring such materials, liquids or gases by means of hose line.

The Seattle Police Department shall carry out *motor vehicle* impoundment requests of the *fire code official* in accordance with the authority of Chapter 11.30 of the *Seattle Municipal Code* and impoundment procedures of the Seattle Police Department.

104.13 Prohibited uses, sales devices. The *fire code official* may prohibit the use, display or sale of any device, material or object that is designed to be used in such a manner as to violate any provisions of this code, or if the use or sale of such constitutes a distinct hazard to life or property. Any materials shown by test to have a life hazard greater than that indicated and controlled by building code interior finish regulations or fire code decorative material regulations is either prohibited or shall be installed or used with such additional fire safety features as are necessary to substantially reduce the life hazard.

104.14 Standby fire personnel and fire watch personnel. The fire code official has the authority to require, at no cost to the jurisdiction, standby fire personnel and/or fire watch personnel if in the opinion of the *fire code official* potentially hazardous conditions or reductions in a life safety feature exist. The owner, agent, or lessee shall provide one or more qualified persons, as required and approved, to be on duty. Such standby fire personnel or fire watch personnel shall be subject to the fire code official's orders at all times and remain on duty during the times such places are open to the public, when such activity is being conducted, or as required by the fire code official.

SECTION 105
PERMITS

105.1 General. Permits shall be in accordance with Sections 105.1.1 through 105.7.14.

105.1.1 Permits required. Permits required by this code shall be obtained from the *fire code official* prior to engaging in the activities or operations for which they are required. Permit fees, if any, ((~~shall~~))may be required to be paid prior to issuance of the permit. Failure to pay the required permit fee may result in cancellation of the permit. Issued permits shall be kept on the premises designated therein at all times and shall be readily available for inspection by the *fire code official*.

105.1.2 Types of permits. There shall be ((~~two~~))types of permits as follows:

1. **Operational permit.** An operational permit allows the applicant to conduct an operation or a business for which a permit is required by Section 105.6 for either:
   1.1. A prescribed period.
   1.2. Until renewed or revoked.
2. ((~~Construction~~))**Installation permit.** An installation ((~~construction~~)) permit allows the applicant to install, ((~~or~~))modify, or remove systems and equipment for which a permit is required by Section 105.7.
3. **Temporary permit.** A temporary permit is valid for a period not to exceed 6 months and establishes fire safety controls for:
   3.1. A time-limited activity not specifically regulated, but where regulatory safeguards are necessary because of unusual circumstances; or
   3.2. Interim operation of a regulated activity at reduced scope and/or with temporary fire safeguards until permanent fire prevention features are provided.

* * *

105.2 Application. Application for a permit required by this code shall be made to the *fire code official* in such form and detail as prescribed by the *fire code official*. Applications for permits shall be accompanied by such plans as prescribed by the *fire code official*.

105.2.1 Refusal to issue permit. If the application for a permit describes an activity ((~~use~~)) that does not conform to the requirements of this code and other pertinent laws and ordinances, the *fire code official* ((~~shall~~))may not issue a permit, ((~~but shall~~))and may return the application to the applicant with the refusal to issue such permit. Such refusal shall, when requested, be in writing and shall contain the reasons for refusal.

105.2.2 Inspection authorized. Before a new operational permit is *approved*, the *fire code official* is authorized to inspect the receptacles, vehicles, buildings, devices, premises, storage spaces or areas to be used to determine compliance with this code or any operational constraints required.

((~~**105.2.3 Time limitation of application.** An application for a permit for any proposed work or operation shall be deemed to have been abandoned 180 days after the date of filing, unless such~~

~~application has been diligently prosecuted or a permit shall have been issued; except that the *fire code official* is authorized to grant one or more extensions of time for additional periods not exceeding 90 days each. The extension shall be requested in writing and justifiable cause demonstrated.~~))

105.2.3((**4**)) **Action on application.** The *fire code official* shall examine or cause to be examined applications for permits and amendments thereto within a reasonable time after filing. If the application or the *construction documents* do not conform to the requirements of pertinent laws, the *fire code official* ((~~shall~~))may reject such application in writing, stating the reasons therefor. If the *fire code official* is satisfied that the proposed work or operation conforms to the requirements of this code and laws and ordinances applicable thereto, the *fire code official* shall issue a permit ((~~therefor~~))as soon as practicable.

105.3 Conditions of a permit. The *fire code official* may condition any permit, increasing or decreasing the scope of activity, and/or specifying fire safety provisions in addition to those established by this code, if the *fire code official* deems such conditions necessary to provide reasonable public safety. A permit shall constitute permission to maintain, store or handle materials; or to conduct processes which produce conditions hazardous to life or property; or to install equipment utilized in connection with such activities; or to install or modify any *fire protection system* or equipment or any other construction, equipment installation or modification in accordance with the provisions of this code where a permit is required by Section 105.6 or 105.7. Such permission shall not be construed as authority to violate, cancel or set aside any of the provisions of this code or other applicable regulations or laws of the jurisdiction.

105.3.1 Expiration. An operational permit shall remain in effect until reissued, renewed, or revoked or for such a period of time as specified in the permit. ((~~Construction permits shall automatically become invalid unless the work authorized by such permit is commenced within 180 days after its issuance, or if the work authorized by such permit is suspended or abandoned for a period of 180 days after the time the work is commenced. Before such work recommences, a new permit shall be first obtained and the fee to recommence work, if any, shall be one-half the amount required for a new permit for such work, provided no changes have been made or will be made in the original construction documents for such work, and provided further that such suspension or abandonment has not exceeded one year.~~)) Permits are not transferable and any change in occupancy, operation, tenancy or ownership shall require that a new permit be issued.

((~~**105.3.2 Extensions.** A permittee holding an unexpired permit shall have the right to apply for an extension of the time within which the permittee will commence work under that permit when work is unable to be commenced within the time required by this section for good and satisfactory reasons. The *fire code official* is authorized to grant, in writing, one or more extensions of the time period a permit for periods of not more than 180 days each. Such~~

~~extensions shall be requested by the permit holder in writing and justifiable cause demonstrated.~~))

105.3.((~~3~~))2 Occupancy prohibited before approval. The building or structure shall not be occupied prior to the *fire code official* ((~~issuing a permit and~~)) conducting associated inspections indicating the applicable provisions of this code have been met.

105.3.2 Point of Information

Approval to occupy a building or structure is granted by the Department of Planning and Development through issuance of a Certificate of Occupancy or Temporary Certificate of Occupancy. A Fire Department recommendation to issue an occupancy certificate is conditioned upon applicable provisions of this code being met.

105.3.((4))3 ((~~Conditional~~))Temporary approval to occupy((~~permits~~)). ((~~Where permits are required and upon the request of a permit applicant, t~~))The *fire code official* is authorized to recommend to the *building code official* that a Temporary Certificate of Occupancy be issued granting permission ((~~a conditional permit~~)) to occupy the premises or portion thereof before the entire work or operations on the premises is completed, ((~~provided that~~))but only if such portion or portions will be occupied safely prior to full completion or installation of equipment and operations without endangering life or public welfare. The *fire code official* shall notify the ((~~permit applicant~~))*building code official* in writing of any limitations or restrictions necessary to keep the occupied ((~~permit~~))area safe. The holder of a ((~~conditional permit~~))temporary certificate of occupancy shall proceed only to the point for which approval has been given, at the permit holder's own risk and without assurance that approval for the occupancy or the utilization of the entire premises, equipment or operations will be granted.

105.3.((~~5~~))4 Posting the permit. Issued permits shall be kept on the premises designated therein at all times and shall be readily available for inspection by the *fire code official*.

((~~**105.3.6 Compliance with code.** The issuance or granting of a permit shall not be construed to be a permit for, or an approval of, any violation of any of the provisions of this code or of any other ordinance of the jurisdiction. Permits presuming to give authority to violate or cancel the provisions of this code or other ordinances of the jurisdiction shall not be valid. The issuance of a permit based on *construction documents* and other data shall not prevent the *fire code official* from requiring the correction of errors in the *construction documents* and other data. Any addition to or alteration of *approved construction documents* shall be *approved* in advance by the *fire code official*, as evidenced by the issuance of a new or amended permit.~~))

105.3.((~~7~~))5 Information on the permit. The *fire code official* shall issue all permits required by this code on an *approved* form furnished for that purpose. The permit shall contain a general description of the operation or occupancy and its location and any other information required by the *fire code official*. Issued permits shall bear the signature of the *fire code official* or other *approved* legal authorization.

105.3.((~~8~~))6 Validity of permit. The issuance or granting of a permit shall not be construed to be a permit for, or an approval of, any violation of any of the provisions of this code or of any other ordinances of the jurisdiction. Permits presuming to give authority to violate or cancel the provisions of this code or other ordinances of the jurisdiction, other than approved alternate materials and methods in accordance with Section 104.8, approved modifications in accordance with Section 104.9, and mitigation approved by the *fire code official*, shall not be valid. The issuance of a permit based on *construction documents*, operational documents and other data shall not prevent the *fire code official* from requiring correction of errors in the documents or other data. Any addition to or alteration of *approved construction documents* shall be *approved* in advance by the *fire code official*, as evidenced by the issuance of a new or amended permit.

105.3.7 Liability Insurance. If liability insurance is required by any section of this code as a permit condition or for a license, the applicant shall maintain continuously on file with the *fire code official* for the entire period of the licensed or permitted activity, evidence of "Commercial General Liability" ("CGL") insurance coverage with a minimum limit of liability of $2,000,000 combined single limit per occurrence bodily injury and property damage subject to no deductible. Such evidence of insurance coverage shall be provided on an Acord Certificate of Liability Insurance or equivalent ("Certificate") issued to "Seattle Fire Department, 301 2nd Ave S., Seattle, WA 98104." "The City of Seattle" shall be an additional insured under CGL insurance on a primary and non-contributory basis per ISO Endorsement CG 20 26 or equivalent and a copy of the actual CGL policy provision documenting this must be attached to the Certificate. The *fire code official* may increase or decrease the above-stated minimum limits of liability. The purpose of the requirement is to insure that members of the public and the City will be compensated for losses caused by bodily injury or property damage resulting from the negligent acts of the licensees, permittees, or their agents or employees.

If the issuance of a license or permit is conditioned upon obtaining CGL insurance by the applicant for such permit, the policy shall be:
1. Issued by a company or companies authorized to do business as an insurer in Washington State pursuant to the provisions of RCW Title 48;
2. Issued for the purpose of complying with the conditions and requirements of Section 105 of the *Seattle Fire Code*;
3. Canceled only on at least 30 days prior written notice to the *fire code official*, except 10 days notice cancellation for nonpayment of premium is allowed, or as specified in RCW 48.18.290, if applicable; and

4. Subject to approval as to sufficiency and form by the City's Risk Management Division at the request of the *fire code official*.

105.4 Construction documents. *Construction documents* shall be in accordance with this section.

105.4.1 Submittals. *Construction documents* and supporting data shall be submitted in one((~~two~~)) or more sets with each application for a permit and in such form and detail as required by the *fire code official*. The *construction documents* shall be prepared by a registered design professional where required by the *fire code official* ((~~statutes of the jurisdiction in which the project is to be constructed~~)).

Exception: The *fire code official* is authorized to waive the submission of *construction documents* and supporting data not required to be prepared by a registered design professional if it is found that the nature of the work applied for is such that review of *construction documents* is not necessary to obtain compliance with this code.

105.4.1.1 Examination of documents. The *fire code official* ((~~shall~~))may examine or cause to be examined the accompanying *construction documents* and shall ascertain by such examinations whether the work indicated and described is in accordance with the requirements of this code.

* * *

105.4.4.1 Phased approval. The *fire code official* is authorized to issue a permit for the construction of part of a structure, system or operation before the *construction documents* for the whole structure, system or operation have been submitted, ((~~provided that~~)) if adequate information and detailed statements have been filed complying with pertinent requirements of this code. The holder of such permit for parts of a structure, system or operation shall proceed at the holder's own risk ((~~with the building operation~~)) and without assurance that a permit for the entire structure, system or operation will be granted.

* * *

((~~**105.4.6 Retention of construction documents.** One set of *construction documents* shall be retained by the *fire code official* for a period of not less than 180 days from date of completion of the permitted work, or as required by state or local laws. One set of *approved construction documents* shall be returned to the applicant, and said set shall be kept on the site of the building or work at all times during which the work authorized thereby is in progress.~~))

105.5 Revocation of permits and certificates. ((~~The *fire code official* is authorized to revoke a permit issued under the provisions of this code when it is found by inspection or otherwise that there has been a false statement or misrepresentation as to the material facts in the application or~~

~~*construction documents* on which the permit or approval was based including, but not limited to, any one of the following:~~
~~1. The permit is used for a location or establishment other than that for which it was issued.~~
~~2. The permit is used for a condition or activity other than that listed in the permit.~~
~~3. Conditions and limitations set forth in the permit have been violated.~~
~~4. There have been any false statements or misrepresentations as to the material fact in the application for permit or plans submitted or a condition of the permit.~~
~~5. The permit is used by a different *person* or firm than the name for which it was issued.~~
~~6. The permittee failed, refused or neglected to comply with orders or notices duly served in accordance with the provisions of this code within the time provided therein.~~
~~7. The permit was issued in error or in violation of an ordinance, regulation or this code.~~))

105.5.1 Nonemergency revocations, suspensions and denials of renewals. In accordance with applicable law, the *fire code official* may revoke or suspend a permit or certificate or deny a request to renew any permit or certificate upon evidence submitted to the *fire code official* that conditions or circumstances have changed so that continued use of the permit or certificate would be unsafe or would violate this code. Such conditions or circumstances include, but are not limited to:
1. The permit has been used by a person other than the person to whom the permit was issued,
2. The permit has been used for a location other than that for which it was issued,
3. Any of the conditions or limitations in the permit or the code have been violated,
4. The permittee failed, refused or neglected to comply within the time provided with orders or notices duly served in accordance with the provisions of this code,
5. There has been a false statement or misrepresentation as to a material fact in the application or plans on which the permit or application was based, or
6. The permit was issued in error or in violation of any code, regulation or other law.

105.5.1.1 Notification. The permit or certificate holder shall be notified in writing no later than five business days prior to the revocation, suspension or denial of a request to renew such permit or certificate.

105.5.1.2 Requesting a hearing. The permit or certificate holder may request in writing a hearing before the *fire code official* for reconsideration of the decision to revoke, suspend or deny renewal. The request shall be filed with the *fire code official* by 5 o'clock p.m. of the second business day following service of the notice.

105.5.1.3 Hearing. The hearing, if one is requested, shall be held no later than one business day after receipt of the written request.

105.5.1.4 Final decision. The *fire code official* shall issue a final decision, in writing, sustaining, modifying or withdrawing the initial decision to revoke, suspend or deny a request to

renew the permit or certificate no later than the next business day following such hearing. Further appeals shall be in accordance with Section 108 of this code.

105.5.2 Emergency Revocations, suspensions and denials of requests to renew. The *fire code official* may revoke, suspend or deny a request to renew a permit or certificate in emergency situations, without providing prior notice to the permit or certificate holder, if an imminent fire, life-safety, or other hazard regulated by this code exists, and failure to take immediate action may cause imminent harm to humans, domestic animals, livestock, wildlife, or to the immediate or neighboring property, lands or premises.

105.5.2.1 Surrendering permits. If such emergency is found to exist and if the fire code official revokes, suspends, or refuses to renew a permit or certificate, all certificates and permits shall be surrendered to the *fire code official* or his/her authorized representative upon demand.

105.5.2.2 Suspending activities. The activities sanctioned by the suspended or revoked certificates or permits shall be suspended until the *fire code official* finds the emergency no longer exists and reinstates the permit or certificate.

105.5.2.3 Requesting an appeal. Persons whose permits or certificates have been revoked or suspended without notice may appeal the fire code official's action by filing a written notice of appeal to the *fire code official* by 5 o'clock p.m. of the next business day following such revocation, suspension or denial or a request to renew a permit or certificate.

105.5.2.4 Hearing. The hearing with the *fire code official* shall be no later than one business day from the receipt of such written appeal.

105.5.2.5 Final decision. The *fire code official* shall issue a final decision in writing, sustaining, modifying or withdrawing the initial decision to revoke, suspend or deny a request to renew the certificate or permit no later than the next business day following such hearing.

105.5.2.6 Further appeals. Further appeals shall be in accordance with Section 108 of this code.

105.6 Required operational and temporary permits. The *fire code official* is authorized to issue operational and/or temporary permits for the operations set forth in Sections 105.6.1 through 105.6.46.

* * *

105.6.3.1 Aviation facilities. An operational permit is required to use a Group H or Group S occupancy for aircraft servicing or repair and aircraft fuel-servicing vehicles. Additional permits required by other sections of this code include, but are not limited to, hot work, hazardous materials and flammable or combustible finishes.

105.6.3.2 Battery systems. An operational permit is required to maintain and operate a stationary storage battery system having an electrolyte capacity of more than 50 gallons (189 L) for flooded lead-acid, nickel cadmium (Ni-Cd) and valve-regulated lead acid (VRLA), or 1,000 pounds (454 kg) for lithium-ion and lithium metal polymer, used for facility *legally-required standby power*, emergency power or uninterrupted power supplies.

105.6.3.3 Bonfires. An operational permit is required to ignite a bonfire.

* * *

105.6.7.1 Combustible fibers. An operational permit is required for the storage and handling of *combustible fibers* in quantities greater than 100 cubic feet (2.8 m3).

Exception: A permit is not required for agricultural storage.

105.6.7.2 Combustible storage. An operational permit is required to store in any building or upon any premises in excess of 2,500 cubic feet (71m3) gross volume of combustible empty packing cases, boxes, barrels or similar containers, rubber tires, rubber, cork or similar combustible material.

* * *

105.6.9.1 Covered mall buildings. An operational permit is required for:

1. The placement of retail fixtures and displays, concession equipment, displays of highly combustible goods and similar items in the mall.
2. The display of liquid- or gas-fired equipment in the mall.
3. The use of open-flame or flame-producing equipment in the mall.

105.6.9. 2 Cruise ship hazardous operations.

105.6.9.2.1 An annual operational permit is required to conduct fuel transfers to or from a cruise ship at a passenger terminal.

105.6.9.2.2 A temporary permit is required to conduct hot work on a cruise ship at a passenger terminal.

* * *

105.6.11 Cutting and welding. ((~~An operational permit is required to conduct cutting or welding operations within the jurisdiction.~~))See 105.6.23, Hot work operations.

* * *

105.6.14 Explosives. An operational permit is required for the ((~~manufacture,~~)) storage, handling, sale or use of any quantity of *explosives*, *explosive materials*, fireworks or pyrotechnic special effects within the scope of Chapter 33.

Exceptions: 1. Storage in Group R-3 occupancies of smokeless propellant, black powder and small arms primers for personal use, not for resale and in accordance with Section 3306.
2. Model rocket motors stored in Group R-3 Occupancies meeting the requirements of NFPA 1122, 1125 and 1127 and in accordance with the United States Bureau of Alcohol, Tobacco, Firearms and Explosives.

105.6.14 Point of Information

The manufacture of explosives is prohibited within Seattle City limits.

* * *

105.6.16 Flammable and combustible liquids. An operational permit is required:

1. To use or operate a pipeline for the transportation within facilities of flammable or *combustible liquids*. This requirement shall not apply to the off-site transportation in pipelines regulated by the Department of Transportation (DOTn) nor does it apply to piping systems.
2. To store, handle or use Class I liquids in excess of 5 gallons (19 L) in a building or in excess of 10 gallons (37.9 L) outside of a building, except that a permit is not required for the following:

2.1. The storage or use of Class I liquids in the fuel tank of a motor vehicle, aircraft, motorboat, mobile power plant or mobile heating plant, or storage of approved portable motor boat fuel containers of 6 gallons (22.7 L) or less individual capacity and 12 gallons (45.4 L) aggregate capacity, unless such storage, in the opinion of the *fire code official*, would cause an unsafe condition.

2.2. The storage or use of paints, oils, varnishes or similar flammable mixtures when such liquids are stored for maintenance, painting or similar purposes for a period of not more than 30 days.

3. To store, handle or use Class II or Class IIIA liquids in excess of 25 gallons (95 L) in a building or in excess of 60 gallons (227 L) outside a building, except for fuel oil used in connection with oil-burning equipment.
4. To store, handle or use Class IIIB liquids in tanks or portable tanks for fueling motor vehicles at motor Fuel-dispensing facilities or where connected to fuel-burning equipment. **Exception:** Fuel oil and used motor oil used for space heating or water heating.
5. To remove Class I or II liquids from an underground storage tank used for fueling motor vehicles by any means other than the *approved*, stationary on-site pumps normally used for dispensing purposes.
6. To operate tank vehicles, equipment, tanks, plants, terminals, wells, fuel-dispensing stations, refineries, distilleries and similar facilities where flammable and *combustible liquids* are produced, processed, transported, stored, dispensed or used.

7. To place temporarily out of service (for more than 90 days) an underground, protected above-ground or above-ground flammable or *combustible liquid* tank.
8. To change the type of contents stored in a flammable or *combustible liquid* tank to a material that poses a greater hazard than that for which the tank was designed and constructed.
9. To manufacture, process, blend or refine flammable or *combustible liquids*.
10. To engage in the dispensing of liquid fuels into the fuel tanks of motor vehicles at commercial, industrial, governmental or manufacturing establishments.
11. To utilize a site for the dispensing of liquid fuels from tank vehicles into the fuel tanks of motor vehicles, marine craft and other special equipment at commercial, industrial, governmental or manufacturing establishments.
12. To store, handle or use Class III-B liquids in excess of 1,000 gallons (3785 L) not provided for in item 4 above.
13. To engage in the business of removing, abandoning or otherwise disposing of residential heating oil tanks.

* * *

105.6.19 Fumigation and thermal insecticidal fogging. An operational permit is required to operate a business of fumigation or thermal insecticidal fogging and to maintain a room, vault, freight container, or chamber in which a toxic or flammable fumigant is used.

105.6.20.1 Hazardous materials. An operational permit is required to store, transport on site, dispense, use or handle hazardous materials in excess of the amounts listed in Table 105.6.20.

105.6.20.2 Hazardous materials stabilization. A temporary permit is required to stabilize potentially unstable (reactive) hazardous materials.

105.6.21.1 HPM facilities. An operational permit is required to store, handle or use hazardous production materials.

105.6.21.2 Helicopter lifts. A temporary permit is required to move suspended loads via helicopter over populated areas.

* * *

105.6.23 Hot work operations. An operational permit is required for hot work including, but not limited to:

1. Public exhibitions and demonstrations where hot work is conducted.
2. Use of portable hot work equipment. ((~~inside a structure.~~))

Exceptions: ((~~Work that is conducted under a construction permit.~~))

1. Within Group R, Division 3 and Group U Occupancies.

2. Torch assemblies connected for use to an acetylene gas cylinder having a maximum individual capacity of 40 cubic feet (1.13 m3).
3. Approved self-contained torch assemblies or similar appliances using LP-gas in accordance with the following:
a. LP-gas cylinders that comply with UL 147A, Standard for Nonrefillable (Disposable) Type Fuel Gas Cylinder Assemblies.
b. LP-gas cylinders that have a maximum water capacity of 2.7 lb (1.2 kg).
c. The maximum aggregate water capacity of LP-gas cylinders in storage (e.g. not connected for use) and use does not exceed 2.7 lb (1.2 kg) per control area.

3. Fixed-site hot work equipment such as welding booths.
((~~4. Hot work conducted within a wildfire risk area.~~))
4.((~~5.~~)) Application of roof coverings with the use of an open-flame device.
5. Hot work on storage tanks, piping and associated systems containing or previously containing flammable or combustible liquids, or other hazardous materials that could present a fire or explosion hazard.
6. Hot work on *vessels*.
7.((~~6.~~)) When *approved*, the *fire code official* ((~~shall~~))is authorized to issue a permit to carry out a hot work program. This program allows *approved* personnel to regulate their facility's hot work operations. The *approved* personnel shall be trained in the fire safety aspects denoted in this chapter and shall be responsible for issuing permits requiring compliance with the requirements found in Chapter 26. These permits shall be issued only to their employees or hot work operations under their supervision.

* * *

105.6.27 LP-gas. An operational permit is required for:
1. Storage and use of LP-gas.
Exceptions:
1. A permit is not required for individual containers with a ((~~500~~))125-gallon (((~~1893~~))473 L) water capacity or less or multiple containers with an aggregate not exceeding 125 gallons (473) L, serving occupancies in Group R-3.
2. A permit is not required for LP-gas containers having a water capacity not exceeding 48 pounds [nominal 20 pounds (9 kg) LP-gas] connected to a LP-gas grill unless at a public assembly or on, or serving, a public way.
3. A permit is not required for storage of up to three spare forklift containers each having a maximum individual water capacity of 104 pounds (10 gallons LP-gas).

2. Operation of cargo tankers that transport LP-gas.

* * *

105.6.29 Marine terminal. An annual operational permit is required to handle or temporarily locate containers, tanks, or cylinders of hazardous materials at marine terminals located within the Seattle City limits. ((~~**Miscellaneous combustible storage.** An operational permit is required to store in any building or upon any premises in excess of 2,500 cubic feet (71m3) gross volume of combustible empty packing cases, boxes, barrels or similar containers, rubber tires, rubber, cork or similar combustible material.~~))

105.6.30 Open burning. An operational permit is required for the kindling or maintaining of an open fire or a fire on any public street, alley, road, or other public or private ground. Instructions and stipulations of the permit shall be adhered to.

Exception: *Recreational fires and portable outdoor fireplaces*.

105.6.31 Open flames and torches. ((~~An operational permit is required to remove paint with a torch; or to use a torch or open-flame device in a wildfire risk area.~~))See Section 105.6.23 Hot work operations.

105.6.32 Open flames and candles. An operational permit is required to use open flames or candles in connection with assembly areas, dining areas of restaurants or drinking establishments.

105.6.32 Point of Information

Open flame and candle permit conditions are included in assembly permits at no additional fee.

* * *

105.6.34.1 ((~~Places of a~~))Assembly occupancy. An operational permit is required to operate an ((~~place of~~))*assembly occupancy* with an occupant load of 100 or more.

105.6.34.2 Temporary assembly occupancy. A temporary assembly occupancy permit is required for any outdoor place to be used for the assembly of more than 100 persons or where temporary alterations are made to the existing means of egress, character, or use of any building or facility used for the gathering of 50 or more people. Plans for such alterations shall be submitted when required by the fire code official.

* * *

105.6.38 Refrigeration equipment. An operational permit is required to operate a mechanical refrigeration unit or system regulated by Chapter 6.

Exception: Refrigeration systems that have a valid annual mechanical permit issued by the Department of Planning and Development.

* * *

105.6.41 Spraying or dipping. An operational permit is required to conduct a spraying or dipping operation utilizing flammable or *combustible liquids* or the application of combustible powders regulated by Chapter 15.

Exception: Mobile spray coaters licensed by, and meeting the requirements of, the Puget Sound Clean Air Agency.

105.6.41.1 Spraying with water-based paints. A no-fee operational permit is required for spraying operations utilizing water-based paints in accordance with Chapter 15.

105.6.42 Storage of tires, scrap tires and tire byproducts. An operational permit is required to establish, conduct or maintain storage of scrap tires and tire byproducts that exceeds 2,500 cubic feet (71m3) of total volume of scrap tires and for indoor storage of tires and tire byproducts. An operational permit is also required for indoor storage of tires and tire byproducts as regulated by Chapter 23.

105.6.43 Temporary membrane structures and tents. See 105.7.14. ((~~An operational permit is required to operate an air-supported temporary membrane structure or a tent having an area in excess of 400 square feet (37 m2).~~

~~**Exceptions:**~~

~~1. Tents used exclusively for recreational camping purposes.~~

~~2. Tents open on all sides, which comply with all of the following:~~

~~2.1. Individual tents having a maximum size of 700 square feet (65 m2).~~

~~2.2. The aggregate area of multiple tents placed side by side without a fire break clearance of not less than 12 feet (3658 mm) shall not exceed 700 square feet (65 m2) total.~~

~~2.3. A minimum clearance of 12 feet (3658 mm) to structures and other tents shall be provided.~~))

* * *

105.7 Required ((~~construction~~))installation permits. The *fire code official* is authorized to issue ((~~construction~~))installation permits for work as set forth in Sections 105.7.1 through 105.7.14.

105.7 Point of Information

Building permits for construction are issued by the Department of Planning and Development (DPD). The fire code does not require separate Fire Department issued installation permits for the following:
• Automatic fire-extinguishing systems.
• Fire alarm and detection systems and related equipment.
• Standpipe systems.

All fire protection systems must be Confidence tested accordance with this code and Administrative Rule 9.02.09, *Confidence Test Requirements for Life Safety Systems*, and any future revisions of this rule adopted by the *fire code official*.

Fire Department Installation and Operational Permits

If an installation permit is required and an operational permit is also required, the approved installation permit is renewable annually as an operational permit.

105.7.1 Automatic fire-extinguishing systems. See Section 105.7 point of information for Department of Planning and Development required permit. ((~~A construction permit is required for installation of or modification to an automatic fire-extinguishing system. Maintenance performed in accordance with this code is not considered a modification and does not require a permit.~~))

105.7.2 Battery systems. A permit is required to install stationary storage battery systems having an electrolyte capacity of more than 50 gallons (189 L) for flooded lead-acid, nickel cadmium (Ni-Cd) and valve-regulated lead acid (VRLA), or 1,000 pounds (454 kg) for lithium-ion and lithium metal polymer, used for facility *legally-required standby power*, emergency power or uninterrupted power supplies.((~~a liquid electrolyte capacity of more than 50 gallons (189 L).~~))

105.7.3 Compressed gases. When the compressed gases in use or storage exceed the amounts listed in Table 105.6.8, an installation ((~~construction~~))permit is required to install, repair damage to, abandon, remove, place temporarily out of service, or close or substantially modify a *compressed gas* system.

Exceptions:

1. Routine maintenance.
2. For emergency repair work performed on an emergency basis, application for permit shall be made within two working days of commencement of work.

105.7.4 Cryogenic fluids. An ((~~construction~~))installation permit is required for installation of or *alteration* to outdoor stationary *cryogenic fluid* storage systems where the system capacity

exceeds the amounts listed in Table 105.6.10. Maintenance performed in accordance with this code is not considered an *alteration* and does not require an((~~construction~~)) installation permit.

105.7.5 Fire alarm and detection systems and related equipment. See Section 105.7 point of information for Department of Planning and Development required permit. ((~~A construction permit is required for installation of or modification to fire alarm and detection systems and related equipment. Maintenance performed in accordance with this code is not considered a modification and does not require a permit.~~))

105.7.6 Fire pumps and related equipment. An installation((~~ construction~~)) permit is required for installation of ((~~or modification to fire pumps and related~~)) fuel tanks, jockey pumps, controllers and generators. Maintenance performed in accordance with this code is not considered a modification and does not require a permit.

105.7.7 Flammable and combustible liquids. An installation((~~ construction~~)) permit is required:

1. To install, repair or modify a pipeline for the transportation of flammable or *combustible liquids*.
2. To install, construct or alter tank vehicles, equipment, tanks, plants, terminals, wells, fuel-dispensing stations, refineries, distilleries and similar facilities where flammable and *combustible liquids* are produced, processed, transported, stored, dispensed or used.
3. To install, alter, remove, abandon or otherwise dispose of a flammable or *combustible liquid* tank.

105.7.8 Hazardous materials. An installation ((~~construction~~)) permit is required to install, repair damage to, abandon, remove, place temporarily out of service, or close or substantially modify a storage facility or other area regulated by Chapter 27 when the hazardous materials in use or storage exceed the amounts listed in Table 105.6.20.

Exceptions:

1. Routine maintenance.
2. For emergency repair work performed on an emergency basis, application for permit shall be made within two working days of commencement of work.

105.7.9 Industrial ovens. An installation ((~~construction~~))permit is required for installation of industrial **ovens** covered by Chapter 21.

Exceptions:

1. Routine maintenance.
2. For repair work performed on an emergency basis, application for permit shall be made within two working days of commencement of work.

105.7.10 LP-gas. An installation ((~~construction~~))permit is required for installation of or modification to an LP-gas system.

105.7.11 Refrigeration permit. An installation permit is required to install a mechanical refrigeration unit or system regulated by Chapter 6.((~~**Private fire hydrants.** A construction permit is required for the installation or modification of private fire hydrants.~~))
Exception: Refrigeration units or systems that have a valid mechanical permit issued by the Department of Planning and Development.

105.7.12 Spraying or dipping. An installation ((~~construction~~)) permit is required to install or modify a spray room, dip tank or booth.

105.7.13 Standpipe systems. See Section 105.7 point of information for Department of Planning and Development required permit.((~~A construction permit is required for the installation, modification or removal from service of a standpipe system. Maintenance performed in accordance with this code is not considered a modification and does not require a permit.~~))

105.7.14 Temporary membrane structures and tents. An installation ((~~construction~~)) permit is required to erect and maintain a((~~n air-supported~~)) temporary membrane structure or a tent having an area in excess of 400 square feet (37 m2) if all of the following conditions are met:

1. The membrane structure or tent will be erected for a time period not to exceed four weeks,
2. The membrane structure or tent will be located at least 200 feet from shorelines,
3. No stage, platform, bleacher or similar structure greater than 4 feet in height will be installed inside the membrane structure or tent,
4. The membrane structure or tent will not be attached to a building or other permanent structure for support, and
5. The installation permit does not propose foul weather use, or a structure of unusual shape, unusual location or large area or height.

105.7.14 Point of Information

If any one of the above-noted conditions (items 1-5) is not met, a permit for the membrane structure or tent may be required from the Department of Planning and Development.

Exceptions:
1. Tents used exclusively for recreational camping purposes.
2. Funeral tents and curtains or extensions attached thereto, when used for funeral services.

3. Tents and awnings open on all sides which comply with all of the following:
3.1. Individual tents shall have a maximum size of 700 square feet (65 m2).
3.2. The aggregate area of multiple tents placed side by side without a fire break clearance of not less than 12 feet (3658 mm) shall not exceed 700 square feet (65 m2) total.
3.3. A minimum clearance of 12 feet (3658 mm) to structures and other tents shall be maintained.

* * *

106.2.2 Approval required. Work shall not be done beyond the point indicated in each successive inspection without first obtaining the approval of the *fire code official*. The *fire code official*, upon notification, shall make the requested inspections and shall either indicate the portion of the ((~~construction~~))work that is satisfactory as completed, or notify the permit holder or his or her agent wherein the same fails to comply with this code. Any portions that do not comply shall be corrected and such portion shall not be covered or concealed until authorized by the *fire code official*.

* * *

106.5 Special inspections. The *fire code official* is authorized to appoint qualified persons or agencies having special technical skills as special inspectors or plan reviewers and accept their inspection, plan review and evaluation of specialized fire protection equipment or systems.

106.5.1 Other inspections. The *fire code official* is authorized to accept inspections performed by other jurisdictions and agencies and honor permits and certificates issued by other jurisdictions for activities regulated by this code, upon presentation to the *fire code official* of satisfactory evidence that such inspections, permits and certificates are substantially in accord with the fire safety requirements of this code.

* * *

107.2.1 Test and inspection records. Required test and inspection records shall be available to the *fire code official* at all times or such records as the *fire code official* designates shall be filed with the *fire code official*.

* * *

107.4 Rendering equipment inoperable. Portable or fixed fire-extinguishing systems or devices and fire-warning systems shall not be rendered inoperative or inaccessible except as necessary during emergencies, maintenance, repairs, *alterations*, drills or prescribed testing.
Exception: When approved by the *fire code official*.

* * *

107.6 Overcrowding. Overcrowding or admittance of any *person* beyond the *approved* capacity of a building or a portion thereof shall not be allowed. The *fire code official*, upon finding any overcrowding conditions or obstructions in *aisles*, passageways or other *means of egress*, or upon finding any condition which constitutes a life safety hazard, shall be authorized to direct actions be taken to reduce the overcrowding or to cause the event to be stopped until such condition or obstruction is corrected.

SECTION 108
((~~BOARD OF~~))APPEALS

108 Point of Information

For information on appeals procedures, see Seattle Fire Department Information Bulletin *Requesting a Review by the Seattle Fire Code Appeals Board* at http://www.seattle.gov/fire/FMO/firecode/infobulletins/ fmoBulletins.htm

108.1 Appeals. Appeals from decisions or actions pertaining to the application and interpretation of this Code shall first be addressed to the *fire code official*. If not resolved with the *fire code official*, the appellant may submit a written request to the *fire code official* for a review by the Fire Code Appeals Board in accordance with all applicable by-laws, rules, regulations and ordinances. The result of this review is advisory only, in accordance with City of Seattle Ordinance 119799. Following receipt of the Fire Code Appeals Board recommendation the fire chief, who shall not have acted as the *fire code official* in the first appeal of the application or interpretation of the code, shall issue a final written decision. ((~~**Board of appeals established.** In order to hear and decide appeals of orders, decisions or determinations made by the *fire code official* relative to the application and interpretation of this code, there shall be and is hereby created a board of appeals. The board of appeals shall be appointed by the governing body and shall hold office at its pleasure. The *fire code official* shall be an ex officio member of said board but shall have no vote on any matter before the board. The board shall adopt rules of procedure for conducting its business, and shall render all decisions and findings in writing to the appellant with a duplicate copy to the *fire code official*.~~))

((~~**108.2 Limitations on authority.** An application for appeal shall be based on a claim that the intent of this code or the rules legally adopted hereunder have been incorrectly interpreted, the provisions of this code do not fully apply, or an equivalent method of protection or safety is proposed. The board shall have no authority to waive requirements of this code.~~))

((~~**108.3 Qualifications.** The board of appeals shall consist of members who are qualified by experience and training to pass on matters pertaining to hazards of fire, explosions, hazardous conditions or *fire protection systems* and are not employees of the jurisdiction.~~))

SECTION 109
VIOLATIONS

109.1 Unlawful acts. It shall be unlawful for a *person*((~~, firm or Corporation~~)) to erect, construct, alter, repair, remove, demolish or utilize a building, occupancy, premises or system regulated by this code, or cause same to be done, in conflict with or in violation of any of the provisions of this code. It is a violation of the *Seattle Fire Code* for any person to fail to comply with the *Seattle Fire Code* or with any order issued by the fire code official.

109.2 Notice of violation. When the *fire code official* finds a building, premises, vehicle, *vessel*, storage facility or outdoor area that is in violation of this code, the *fire code official* is authorized to ((~~prepare~~))issue a written notice of violation describing the violation((~~conditions deemed unsafe~~)) and, when compliance is not immediate, specifying a time for reinspection. Nothing in this subsection shall be deemed to limit or preclude any other enforcement action or proceeding, and nothing in this section shall be deemed to obligate or require the fire code official to issue a notice of violation prior to the imposition of civil or criminal penalties.

109.2.1 Service. A notice of violation issued pursuant to this code shall be served upon the *owner*, operator, occupant or other *person* responsible for the condition or violation, either by personal service, mail or by delivering the same to, and leaving it with, some *person* of responsibility upon the premises. For unattended or abandoned locations, a copy of such notice of violation shall be posted on the premises in a conspicuous place at or near the entrance to such premises and the notice of violation ((~~shall~~))may be mailed by certified mail with return receipt requested or a certificate of mailing, to the last known address of the *owner*, occupant or both.

109.2.2 Compliance with orders and notices. A notice of violation issued or served as provided by this code shall be complied with by the *owner*, operator, occupant or other *person* responsible for the condition or violation to which the notice of violation pertains.

109.2.3 Prosecution of violations. If the notice of violation is not complied with promptly or by the time specified in the notice, the *fire code official* is authorized to request the legal counsel of the jurisdiction to institute the appropriate legal proceedings at law or in equity to restrain, correct or abate such violation,((~~or~~)) to require removal or termination of the unlawful occupancy of the structure in violation of the provisions of this code or of the order or notice((~~direction made pursuant hereto~~)), or to collect a penalty for violation.

109.2.4 Unauthorized tampering. Signs, tags or seals posted or affixed by the *fire code official* shall not be mutilated, destroyed or tampered with or removed without authorization from the *fire code official*.

109.3 ((~~**Violation** p~~)) **Penalties.**

109.3.1 Alternative civil penalties. Any person ((~~*Persons*~~)) who shall violate a provision of this code or shall fail to comply with any of the requirements thereof or who shall erect, install, alter, repair or do work in violation of the *approved construction or installation documents* or directive of the *fire code official*, or of a permit or certificate used under provisions of this code, shall be subject to a cumulative civil penalty in an amount not to exceed $1,000 per day for each violation from the time the violation occurs or begins until compliance is achieved. The penalty shall be collected by civil action brought in the name of the City. The *fire code official* shall notify the City Attorney in writing of the name of any person, firm or corporation subject to the penalty, and the City Attorney shall, with the assistance of the *fire code official*, take appropriate action to collect the penalty. In any civil action for a penalty, the city has the burden of proving by a preponderance of the evidence that a violation exists or existed. ((~~guilty of a [SPECIFY OFFENSE], punishable by a fine of not more than [AMOUNT] dollars or by imprisonment to exceeding [NUMBER OF DAYS], or both such fine and imprisonment. Each day that a violation continues after due notice has been served shall be deemed a separate offense.~~))

109.3.2 Alternative criminal penalty. Any person who shall violate a provision of this code or shall fail to comply with any of the requirements thereof or who shall erect, install, alter, repair or do work in violation of the approved construction or installation documents or directive of the *fire code official*, or of a permit or certificate used under provisions of this code, shall be guilty of a gross misdemeanor subject to the provisions of *Seattle Municipal Code* Chapters 12A.02 and 12A.04, except that absolute liability shall be imposed for such a violation or failure to comply and none of the mental states described in Section 12A.04.030 need be proved. The *fire code official* may request the City Attorney prosecute such violations criminally as an alternative to the civil penalties provision. Each day that a violation continues shall be deemed a separate offense.

109.((~~3.1~~))4 Abatement of violation. In addition to the imposition of ((~~the~~)) civil and criminal penalties ((~~herein described~~)), the *fire code official* is authorized to institute appropriate action to prevent unlawful construction; ((~~or~~)) to restrain, correct or abate a violation; ((~~or~~)) to prevent illegal occupancy of a structure or premises; or to stop an illegal act, conduct of business or occupancy of a structure on or about any premises.

SECTION 110
UNSAFE BUILDINGS, PREMISES, MOTOR VEHICLES AND VESSELS

110.1 General. If ((~~during the inspection of~~))a premises, a building or structure or any building system, *motor vehicle* or *vessel*, in whole or in part, endangers any property or the health or safety of the occupants of the property or of neighboring premises, buildings, *motor vehicles*, *vessels*, or the health and safety of the public or fire department personnel((~~constitutes a clear and inimical threat to human life, safety or health,~~))the *fire code official* shall issue such notice or orders to remove or remedy the conditions as shall be deemed necessary in accordance with this section. ((~~and shall~~))The *fire code* official may refer the building to the Department of Planning and Development ((~~building department~~)) for any repairs, *alterations*, remodeling, removing or demolition required.

110.1.1 Unsafe conditions. Structures, premises or existing equipment that are or hereafter become unsafe or deficient because of inadequate *means of egress*, ((~~or which~~))that constitute a fire hazard, ((~~or are otherwise dangerous to human life or the public welfare, or which~~))that involve illegal or improper occupancy or inadequate maintenance, or that are otherwise dangerous to human life or public welfare, shall be deemed an unsafe condition. A vacant structure which is not secured against unauthorized entry as required by Section 311 shall be deemed unsafe.

110.1.2 Structural hazards. When an apparent structural hazard is caused by the faulty installation, operation or malfunction of any of the items or devices governed by this code, the *fire code official* ((~~shall~~))is authorized to immediately notify the building code official in accordance with Section 110.1.

110.2 Evacuation. The *fire code official* or the fire department official in charge of an incident shall be authorized to order the immediate evacuation of any occupied premises, building, *motor vehicle* or *vessel* deemed unsafe when such premises, building, *motor vehicle*, or *vessel* has hazardous conditions that present imminent danger to premises, building, *motor vehicle*, or *vessel* occupants. *Persons* so notified shall immediately leave the structure or premises, *motor vehicle*, or *vessel* and shall not enter or re-enter until authorized to do so by the *fire code official* or the fire department official in charge of the incident.

110.3 Summary abatement. Where conditions exist that are deemed hazardous to life and property, the *fire code official* or fire department official in charge of the incident is authorized to abate summarily such hazardous conditions that are in violation of this code.

110.4 Abatement. The *owner*, operator or occupant of a building or premises deemed unsafe by the *fire code official* shall abate or cause to be abated or corrected such unsafe conditions either by repair, rehabilitation, demolition or other *approved* corrective action.

110.5 Notification. The *fire code official* shall serve the responsible party with a copy of violations, correction letters and orders issued.

SECTION 111
STOP WORK OR USE ORDER

111.1 Order. Whenever the *fire code official* finds any work or use regulated by this code being performed in a manner contrary to the provisions of this code or in a dangerous or unsafe manner, the *fire code official* is authorized to issue a stop work or use order.

111.2 Issuance. A stop work or use order shall be in writing and shall be given to the *owner* of the property, or to the *owner's* agent, or to the *person* doing the work or use. Upon issuance of a stop work or use order, the cited work or use shall immediately cease. The stop work or use order shall state the reason for the order, and the conditions under which the cited work or use is authorized to resume.

111.3 Emergencies. Where an emergency exists, the *fire code official* shall not be required to give a written notice prior to stopping the work or use.

111.4 Failure to comply. It is a violation of this code for ((~~A~~))any *person*((~~who shall~~)) to continue any work or use after having been served with a stop work or use order, except such work or use as that *person* is directed to perform to remove a violation or unsafe condition.((~~, shall be liable to a fine of not less than [AMOUNT] dollars or more than [AMOUNT] dollars.~~))

* * *

SECTION 113
FEES

113.1 Fees. A permit shall not be issued until the fees have been paid, nor shall an amendment to a permit be released until the additional fee, if any, has been paid.

Exception: Those permits for which the *fire code official*, pursuant to the annual fee ordinance, authorizes invoices to be sent for the fees after the permits are issued.

113.2 Schedule of permit fees. A fee for each permit shall be paid as required, in accordance with the schedule ((~~as~~))established by the ((~~applicable~~))governing authority.

((~~**113.3 Work commencing before permit issuance.** Any *person* who commences any work, activity or operation regulated by this code before obtaining the necessary permits shall be subject to an additional fee established by the applicable governing authority, which shall be in addition to the required permit fees.~~))

113.((**4**))**3 Related fees.** The payment of the fee for the construction, *alteration*, removal or demolition of work done in connection ((~~to~~))or concurrently with the work or activity authorized

by a permit ((~~shall~~))does not relieve the applicant or holder of the permit from the payment of other fees that are prescribed by law.

113.((~~5~~))**4 Refunds.** The applicable governing authority is authorized to establish a refund policy.

Section 4. Chapter 2 of the 2009 International Fire Code is amended as follows:

***

201.5 References to other codes. If an International, National or Uniform Code is referenced in this code, it means the edition that is currently in effect of that International, National or Uniform code, along with its adopted Seattle amendments. References to the "Building Code", "Fire Code", "Mechanical Code" and "Plumbing Code" mean the Seattle editions of those codes.

***

SECTION 202
GENERAL DEFINITIONS

***

[W] ADULT FAMILY HOME. Means a dwelling, licensed by Washington state, in which a person or persons provide personal care, special care, room and board to more than one but not more than six adults who are not related by blood or marriage to the person or persons providing the services.

***

[W] ALERT SIGNAL. See Section 402.1.

[W] ALERT SYSTEM. See Section 915.

***

BERTH. See Section 9402.1.

***

BOATHOUSE. See Section 9402.1.

***

[B] CHILD CARE FACILITIES. Facilities that provide care on a 24-hour basis to more than five children, 21/2 years of age or less, shall be classified as Group I-2.

[W] CHILD DAY CARE. For the purposes of these regulations is the care of children during any period of a 24-hour day.

[W] CHILD DAY CARE HOME, FAMILY. A child day care facility, licensed by Washington State, located in the dwelling of the person or persons under whose direct care and supervision the child is placed, for the care of twelve or fewer children, including children who reside at the home.

***

CLOSED CONTAINER. See Section 2702.1.

***

COVERED BOAT MOORAGE. See Sections 4502.1 and 9402.1.

***

DESIGNATED HOT WORK FACILITY. See Section 4502.1.

***

ELECTRICAL CODE. The National Electrical Code, promulgated by the National Fire Protection Association, as adopted and amended by this jurisdiction.

***

[B] EMERGENCY POWER SYSTEM. An electrical system that complies with *Seattle Electrical Code* Article 700.

***

FIRE DETECTION SYSTEM. See Section 902.1.

***

[B] FIRE DISTRICT. See Section 2202.1.

***

FLOAT. See Sections 4502.1 and 9402.1.

***

[W] FULL LOCKDOWN. See Section 402.1.

***

HIGH-RISE BUILDING. See Section 902.1.

***

[M] HOOD. ((~~See Section 602.1.~~))
((~~**Type I.** See Section 602.1.~~))An air intake device used to capture by entrapment, impingement, adhesion or similar means, grease, moisture, heat and similar contaminants before they enter a duct system.

Type I. A kitchen hood for collecting and removing grease vapors and smoke generated from medium-duty, heavy-duty, extra-heavy-duty, and some light-duty cooking appliances. Such hoods are equipped with a fire suppression system.
Type II. A general kitchen hood for collecting and removing steam, vapor, heat, odors and products of combustion generated from some light-duty cooking appliances.

***

MOTOR VEHICLE. See Section 2202.1.

MOTOR VEHICLE, UNATTENDED. See Section 2202.1.

***

[W] NIGHTCLUB. An A-2 Occupancy use under the 2006 *International Building Code* in which the aggregate area of concentrated use of unfixed chairs and standing space that is specifically designated and primarily used for dancing or viewing performers exceeds three hundred fifty square feet, excluding adjacent lobby areas. "Nightclub" does not include theaters with fixed seating, banquet halls, or lodge halls.

***

OCCUPANCY CLASSIFICATION. For the purposes of this code, certain occupancies are defined as follows:

***

[W] Day care. The use of a building or structure, or portion thereof, for educational, supervision or personal care services for more than five children older than 21/2 years of age shall be classified as an E occupancy.
Exception: *Family child day care homes* licensed by the state of Washington for the care of twelve or fewer children shall be classified as Group R-3.

***

[W] Group I-1. This occupancy shall include buildings, structures or parts thereof housing more than 16 *persons*, on a 24-hour basis, who because of age, mental disability or other reasons, live in a supervised residential environment that provides personal care services. The occupants are capable of responding to an emergency situation without physical assistance from staff. This group shall include, but not be limited to, the following:

Alcohol and drug centers
Assisted living facilities
Congregate care facilities
Convalescent facilities
Group homes
Half-way houses

Residential board and care facilities
Social rehabilitation facilities

A facility such as the above with five or fewer *persons* and *adult family homes* licensed by Washington state shall be classified as Group R-3 or shall comply with the *International Residential Code* in accordance with Section 101.2 of the *International Building Code*. ((~~A facility such as above, housing at least six and not more than 16 *persons*, shall be classified as Group R-4.~~))

A facility such as the above providing licensed care to clients in one of the categories listed in the *Seattle Building Code* Section 310.1 licensed by Washington state shall be classified as Group R-2.

[B] Group I-2. This occupancy shall include buildings and structures used for medical, surgical, psychiatric, nursing or custodial care on a 24-hour basis ((~~for~~)) of more than five *persons* who are not capable of self-preservation. This group shall include, but not be limited to, the following:
Child care facilities
Detoxification facilities
Hospice care centers
Hospitals
Mental hospitals
Nursing homes (both intermediate-care facilities and skilled nursing facilities)

[W] A facility such as the above providing licensed care to clients in one of the categories listed in *Seattle Building Code* Section 310.1 licensed by Washington state shall be classified as Group R-2.

[W] A facility such as the above with five or fewer shall be classified as Group R-3 or shall comply with the *Seattle Residential Code*.

***

[W] Adult care facility. A facility that provides accommodations for less than 24 hours for more than five unrelated adults and provides supervision and personal care services shall be classified as Group I-4.
Exception: Where the occupants are capable of responding to an emergency situation without physical assistance from the staff, the facility shall be classified as Group ((~~R~~))A-3.

[W] Child care facility. ((~~Child care~~))A facility((~~ies~~)) that provides supervision and personal care on less than a 24-hour basis for more than five children 21/2 years of age or less shall be classified as Group I-4.
Exceptions:

1. A child day care facility that provides care for more than five but no more than 100 children 21/2 years or less of age, where the rooms in which the children are cared for are located on a *level of exit discharge* serving such rooms and each of these child care rooms has an *exit* door directly to the exterior, shall be classified as Group E.
2. *Family child day care homes* licensed by Washington state for the care of 12 or fewer children shall be classified as Group R-3.

***

[W] Residential Group R. Residential Group R includes, among others, the use of a building or structure, or a portion thereof, for sleeping purposes when not classified as an Institutional Group I or when not regulated by the *International Residential Code* in accordance with Section 101.2 of the *International Building Code*. Residential occupancies shall include the following:

R-1 Residential occupancies containing sleeping units where the occupants are primarily transient in nature, including:

Boarding houses (transient) with more than 10 occupants
Hotels (transient)
Motels (transient)
Congregate living facilities (transient) with more than 10 ((~~or fewer~~))occupants ((~~are permitted to comply with the construction requirements for Group R-3.~~))

R-2 Residential occupancies containing *sleeping units* or more than two *dwelling units* where the occupants are primarily permanent in nature, including:

Apartment houses
Boarding homes licensed by Washington state under Chapter 388-78A WAC
Boarding houses (nontransient) with more than 16 occupants
Convents
Dormitories
Fraternities and sororities
Hotels (nontransient)
Live/work units
Monasteries
Motels (nontransient)
Residential treatment facilities as licensed by Washington state under Chapter 246-337 WAC
Vacation timeshare properties
Congregate living facilities (nontransient) with more than 16 occupants ((~~or fewer occupants are permitted to comply with the construction requirements for be classified as Group R-3.~~))

[W] R-3 Residential occupancies where the occupants are primarily permanent in nature and not classified as Group R-1, R-2, ((~~R-4~~)) or I, including:

Buildings that do not contain more than two dwelling units.
Adult care facilities that provide accommodations for five or fewer persons of any age for less than 24 hours.
((~~Child care facilities that provide accommodations for five or fewer persons of any age for less than 24 hours.~~))
Congregate living facilities (nontransient) ((~~and *boarding houses*~~))with 16 or fewer ((~~persons~~)) occupants.
Congregate living facilities (transient) with 10 or fewer occupants.
Adult family homes, *family child day care homes*, and adult care and child care facilities that are within a single family home are permitted to comply with the *International Residential Code*.
Foster family care homes licensed by Washington state are permitted, as an accessory use to a dwelling, for six or fewer children including those of the resident family.

((~~R-4~~ ~~Residential occupancies shall include buildings arranged for occupancy as residential care/assisted living facilities including more than five but not more than 16 occupants, excluding staff. Group R-4 occupancies shall meet the requirements for construction as defined for Group R-3, except as otherwise provided for in this code or shall comply with the *International Residential Code*, provided the building is protected by an *automatic sprinkler system* installed in accordance with Section 903.2.8.~~))

[B] Storage Group S. Storage Group S occupancy includes, among others, the use of a building or structure, or a portion thereof, for storage that is not classified as a hazardous occupancy.

Moderate-hazard storage, Group S-1. Buildings occupied for storage uses that are not classified as Group S-2, including, but not limited to, storage of the following:

Aerosols, Levels 2 and 3
Aircraft hangar (storage and repair)
Bags: cloth, burlap and paper
Bamboos and rattan
Baskets
Belting: canvas and leather
Books and paper in rolls or packs
Boots and shoes
Buttons, including cloth covered, pearl or bone
Cardboard and cardboard boxes
Clothing, woolen wearing apparel
Cordage

Dry boat storage (indoor)
Furniture
Furs
Glues, mucilage, pastes and size
Grains
Horns and combs, other than celluloid
Leather
Linoleum
Lumber
Motor vehicle and marine repair garages complying with the maximum allowable quantities of hazardous materials *listed* in Table 2703.1.1(1) (see Section 406.6 of the *International Building Code*)
Photo engravings
Resilient flooring
Silks
Soaps
Sugar
Tires, bulk storage of
Tobacco, cigars, cigarettes and snuff
Upholstery and mattresses
Wax candles

Low-hazard storage, Group S-2. Includes, among others, buildings used for the storage of noncombustible materials such as products on wood pallets or in paper cartons with or without single thickness divisions; or in paper wrappings. Such products are permitted to have a negligible amount of plastic trim, such as knobs, handles or film wrapping. Storage uses shall include, but not be limited to, storage of the following:
Asbestos
Beverages up to and including 16-percent alcohol in metal, glass or ceramic containers
Cement in bags
Chalk and crayons
Covered boat moorage not classified as Group U
Dairy products in nonwaxed coated paper containers
Dry cell batteries
Electrical coils
Electrical motors
Empty cans
Food products
Foods in noncombustible containers
Fresh fruits and vegetables in nonplastic trays or containers
Frozen foods

Glass
Glass bottles, empty or filled with noncombustible liquids
Gypsum board
Inert pigments
Ivory
Meats
Metal cabinets
Metal desks with plastic tops and trim
Metal parts
Metals
Mirrors
Oil-filled and other types of distribution transformers
Parking garages, open or enclosed
Porcelain and pottery
Stoves
Talc and soapstones
Washers and dryers

***

OIL-BURNING EQUIPMENT. See Section 602.1.

***

P_F DEVICE. See Section 2602.1.

***

PIER. See Sections 4502.1 and 9402.1.

***

POWER TAP. See Section 602.1.

***

[W] RECALL SIGNAL. See Section 402.1.

***

SHIPYARD. A pier, wharf or series of piers and wharves and related onshore facilities, designated by the *fire code official*, that by virtue of the pier construction, location, emergency vehicle access, fire protection, hydrant availability and onsite safety personnel in accordance with Seattle Fire Department Administrative Rule 26.02.09, *Designated Hot Work Facilities and Shipyards* and any future revisions of this rule adopted by the *fire code official*, is suitable to permit repairs, including major conversions, on marine vessels of any length.

***

SLIP. See Section 9402.1.

***

[B] STANDBY POWER SYSTEM, LEGALLY REQUIRED. An electrical power system that complies with *Seattle Electrical Code* Article 701, Legally Required Standby Systems.

***

STANDBY FIRE PERSONNEL. Uniformed employees of the Seattle Fire Department.

***

SUBSTRUCTURE. See Section 4502.1.
SUPERSTRUCTURE. See Section 4502.1.

***

VAULT. See Section 3402.1.

***

VESSEL. ((~~See Section 1002.1.~~))A watercraft, other than a seaplane on the water, used or capable of being used as a means of transportation.

***

WHARF. See Sections 4502.1 and 9402.1.

***

Section 5. Chapter 3 of the 2009 International Fire Code is amended as follows:

***

SECTION 302
DEFINITIONS

***

BONFIRE. An outdoor fire utilized for ceremonial or recreational purposes and exceeding the size of a recreational fire.

***

PORTABLE OUTDOOR FIREPLACE. An ((~~portable,~~)) outdoor, solid-fuel-burning fireplace that is easily transported and moved around and that may be constructed of steel, concrete, clay or other noncombustible material. An ((~~portable~~)) outdoor fireplace may be open in design, or may be equipped with a small hearth opening and a short chimney or chimney opening in the top.

***

303.2 Location. Asphalt (tar) kettles shall not be located within 20 feet (6096 mm) of any combustible material, combustible building surface or any building opening and within a controlled area identified by the use of traffic cones, barriers or other *approved* means. Asphalt (tar) kettles and pots shall not be utilized inside or on the roof of a building or structure. Roofing kettles and operating asphalt (tar) kettles shall not block *means of egress*, gates, roadways or entrances.

Exception: If a practical difficulty is satisfactorily demonstrated, tar kettles may be located on a roof. All roof top kettles require a temporary permit.

***

303.10 LPG fuel containers. The maximum individual LPG container capacity and the aggregate quantity of LPG allowed to be used in conjunction with tar kettles shall be in accordance with Chapter 38.

***

304.3 Containers. Combustible rubbish, and waste material kept within or near a structure shall be stored in accordance with Sections 304.3.1 through 304.3.((**4**))3.

304.3.1 Spontaneous ignition. Materials susceptible to spontaneous ignition, such as oily rags, shall be stored in a *listed* disposal container. Contents of such containers shall be removed and disposed of daily.

304.3.2 Capacity exceeding 5.33 cubic feet. Containers with a capacity exceeding 5.33 cubic feet (40 gallons) (0.15 m3) shall be provided with lids. Containers and lids shall be constructed of noncombustible materials or of combustible materials with a peak rate of heat release not exceeding 300 kW/m2 when tested in accordance with ASTM E 1354 at an incident heat flux of 50 kW/m2 in the horizontal orientation.

Exceptions:

1. Wastebaskets in Group I-3 occupancies shall comply with Section 808.1.
2. Waste accumulated for collection by the City's solid waste utility shall be stored in containers (to include recycling containers) specified in the City's solid waste collection contracts authorized by ordinance.
3. Containers in areas protected by an *approved automatic sprinkler system* installed throughout in accordance with Section 903.3.1.1, 903.3.1.2 or 903.3.1.3.

((~~**304.3.3 Capacity exceeding 1.5 cubic yards.** Dumpsters and containers with an individual capacity of 1.5 cubic yards [40.5 cubic feet (1.15 m3)] or more shall not be stored in buildings or placed within 5 feet (1524 mm) of combustible walls, openings or combustible roof eave lines.~~

~~**Exceptions:**~~

~~1. Dumpsters or containers in areas protected by an *approved automatic sprinkler system* installed throughout in accordance with Section 903.3.1.1, 903.3.1.2 or 903.3.1.3.~~

~~2. Storage in a structure shall not be prohibited where the structure is of Type I or IIA construction, located not less than 10 feet (3048 mm) from other buildings and used exclusively for dumpster or container storage.~~))

304.3.3((4)) Capacity of 1 cubic yard or more. Dumpsters with an individual capacity of 1.0 cubic yard [200 gallons (0.76 m3)] or more shall not be stored in buildings or placed within 5 feet (1524 mm) of combustible walls, openings or combustible roof eave lines unless the dumpsters are constructed of noncombustible materials or of combustible materials with a peak rate of heat release not exceeding 300 kW/m2 when tested in accordance with ASTME 1354 at an incident heat flux of 50 kW/m2 in the horizontal orientation.

Exceptions:

1. Dumpsters in areas protected by an *approved automatic sprinkler system* installed throughout in accordance with Section 903.3.1.1, 903.3.1.2 or 903.3.1.3.
2. Storage in a structure shall not be prohibited where the structure is of Type I or IIA construction, located not less than 10 feet (3048 mm) from other buildings and used exclusively for dumpster or container storage.

***

306.1.1 Fire extinguishers. Two approved fire extinguishers with a minimum 10-B:C rating shall be installed and maintained ready for use in projection rooms.

***

SECTION 307
OPEN BURNING, BONFIRES, RECREATIONAL FIRES AND PORTABLE OUTDOOR FIREPLACES

307.1 General. ((~~A person shall not kindle or maintain or authorize to be kindled or maintained any *open burning* unless conducted and *approved* in accordance with this section.~~))*Open burning* is prohibited in the City of Seattle. *Bonfires*, use of *portable outdoor fireplaces* and *recreational fires* shall be in accordance with Section 307.

((~~**307.1.1 Prohibited open burning.** *Open burning* that is offensive or objectionable because of smoke emissions or when atmospheric conditions or local circumstances make such fires hazardous shall be prohibited.~~))

307.2 Permit required. A permit shall be obtained from the *fire code official* in accordance with Section 105.6 prior to kindling ((~~a fire for recognized silvicultural or range or wildlife management practices, prevention or control of disease or pests, or~~))a *bonfire*. ((~~Application for such approval shall only be presented by and permits issued to the *owner* of the land upon which the fire is to be kindled.~~))

307.2.1 Authorization. Where required by state or local law or regulations, *open burning* shall only be permitted with prior approval from the state or local air and water quality management authority, provided that all conditions specified in the authorization are followed.

307.3 Extinguishment authority. The *fire code official* is authorized to order the extinguishment by the permit holder, another person responsible or the fire department of *open burning*((~~ that creates or adds to a hazardous or objectionable situation~~)).

((~~**307.4 Location.** The location for *open burning* shall not be less than 50 feet (15 240 mm) from any structure, and provisions shall be made to prevent the fire from spreading to within 50 feet (15 240 mm) of any structure.~~

~~**Exceptions:**~~

~~1. Fires in *approved* containers that are not less than 15 feet (4572 mm) from a structure.~~

~~2. The minimum required distance from a structure shall be 25 feet (7620 mm) where the pile size is 3 feet (914 mm) or less in diameter and 2 feet (610 mm) or less in height.~~))

307.4((~~.1~~)) Bonfires. A bonfire is not allowed except by permit from the *fire code official*. ((~~shall not be conducted within 50 feet (15 240 mm) of a structure or combustible material unless the fire is contained in a barbecue pit. Conditions which could cause a fire to spread within 50 feet (15 240 mm) of a structure shall be eliminated prior to ignition.~~))

307.5((~~4.2~~)) Recreational fires. *Recreational fires* shall not be conducted within 25 feet (7620 mm) of a structure or combustible material. Conditions which could cause a fire to spread within 25 feet (7620 mm) of a structure shall be eliminated prior to ignition.

307.6((~~4.3~~)) Portable outdoor fireplaces. *Portable outdoor fireplaces* shall be used in accordance with the manufacturer's instructions and shall not be operated within 15 feet (3048 mm) of a structure or combustible material.
Exception: *Portable outdoor fireplaces* used at one- and two-family *dwellings*.

307.7((~~5~~)) Attendance. ((~~*Open burning*, b~~))Bonfires, *recreational fires* and use of portable outdoor fireplaces shall be constantly attended until the fire is extinguished. A minimum of one portable fire extinguisher complying with Section 906 with a minimum 4-A rating or other *approved* on-site fire-extinguishing equipment, such as dirt, sand, water barrel, garden hose or water truck, shall be available for immediate utilization.

307.8 General burning prohibitions Trash, yard waste, rubbish and paper are prohibited as fuel for bonfires, recreational fires and fires in outdoor fireplaces. Smoke or odor emissions from bonfires, recreational fires and use of outdoor fireplaces that make such fires hazardous shall be

prohibited. The fire code official is authorized to order the extinguishment of a bonfire, recreational fire or fire in an outdoor fireplace which creates or adds to a hazardous situation.

307.8 Point of Information

Hazards from *bonfires, recreational fires,* and fires in outdoor fireplaces may include but are not limited to smoke or odor emissions causing potential for false alarms, medical alarms, hazards to health, and exposure to other structures from fire.

If conducting a bonfire or recreational fire or if using an outdoor fireplace, fire extinguishing equipment in accordance with SFC 307.7 shall be available for immediate use. For additional regulations and information pertaining to outdoor fires and burning, see RCW 70.94. Go to www.pscleanair.org for information on how to register an air quality complaint with the Puget Sound Clean Air Agency.

See *SFD Information Bulletin Recreational and Cooking Fire Regulations* at www.seattle.gov/fire. For air quality and burn ban status information and regulations contact the Puget Sound Clean Air Agency referenced above.

SECTION 308
OPEN FLAMES

308.1 General. Open flame, fire and burning on all premises shall be in accordance with Sections 308.1.1 through 308.4.1 and with other applicable sections of this code.

Exception: *Bonfires*, *recreational fires* and use of *portable outdoor fireplaces* shall be in accordance with Section 307.

***

((~~308.1.4 Open-flame cooking devices.~~ ~~Charcoal burners and other open-flame cooking devices shall not be operated on combustible balconies or within 10 feet (3048 mm) of combustible construction.~~

~~**Exceptions:**~~
~~1. One- and two-family *dwellings*.~~
~~2. Where buildings, balconies and decks are protected by an *automatic sprinkler system*.~~
~~3. LP-gas cooking devices having LP-gas container with a water capacity not greater than 21/2 pounds [nominal 1 pound (0.454 kg) LP-gas capacity].~~))

308.1.((~~5~~))**4 Location near combustibles.** Open flames such as from candles, lanterns, kerosene heaters and gas-fired heaters shall not be located on or near decorative material or similar combustible materials.

308.1.((~~6~~))**5 Open-flame devices.** Torches and other devices, machines or processes liable to start or cause fire shall not be operated or used in or upon wildfire risk areas, except by a permit in accordance with Section 105.6 secured from the *fire code official*.

Exception: Use within inhabited premises or designated campsites which are a minimum of 30 feet (9144 mm) from grass-, grain-, brush- or forest-covered areas.

308.1.((~~6~~))**5.1 Signals and markers.** Flame-employing devices, such as lanterns or kerosene road flares, shall not be operated or used as a signal or marker in or upon wildfire risk areas.

Exception: The proper use of fuses at the scenes of emergencies or as required by standard railroad operating procedures.

308.1.((~~6~~))**5.2 Portable fueled open-flame devices.** Portable open-flame devices fueled by flammable or combustible gases or liquids shall be enclosed or installed in such a manner as to prevent the flame from contacting combustible material.

Exceptions:

1. LP-gas-fueled devices used for sweating pipe joints or removing paint in accordance with Chapter 38.
2. Cutting and welding operations in accordance with Chapter 26.
3. Torches or flame-producing devices in accordance with Section 308.((~~4~~))1.3 and 308.1.5.
4. Candles and open-flame decorative devices in accordance with Section 308.((~~3~~))1.4 and 308.1.9.

308.1.((~~7~~))**6 Religious ceremonies.** ((~~When, in the opinion of the *fire code official*, adequate safeguards have been taken, participants in religious ceremonies are allowed to carry hand-held candles.~~))Participants in religious ceremonies shall not be precluded from carrying hand-held candles. Hand-held candles shall not be passed from one *person* to another while lighted. A competent adult shall remain within 15 feet (4572 mm) of a child carrying a hand-held candle at all times, unless an alternative equivalent safety standard is approved.

((~~**308.1.7.1 Aisles and exits.** Candles shall be prohibited in areas where occupants stand, or in an *aisle* or *exit*.~~))

308.1.((~~8~~))**7 Flaming food and beverage preparation.** The preparation of flaming foods or beverages in places of assembly and drinking or dining establishments shall be in accordance with Sections 308.1.((~~8~~))7.1 through 308.1.((~~8~~))7.5.

308.1.((~~8~~))7.1 Dispensing. Flammable or *combustible liquids* used in the preparation of flaming foods or beverages shall be dispensed from one of the following:
1. A 1-ounce (29.6 ml) container; or
2. A container not exceeding 1-quart (946.5 ml) capacity with a controlled pouring device that will limit the flow to a 1-ounce (29.6 ml) serving.

308.1.((~~8~~))7.2 Containers not in use. Containers shall be secured to prevent spillage when not in use.

308.1.((~~8~~))7.3 Serving of flaming food. The serving of flaming foods or beverages shall be done in a safe manner and shall not create high flames. The pouring, ladling or spooning of liquids is restricted to a maximum height of 8 inches (203 mm) above the receiving receptacle.

308.1.((~~8~~))7.4 Location. Flaming foods or beverages shall be prepared only in the immediate vicinity of the table being serviced. They shall not be transported or carried while burning.

308.1.((~~8~~))7.5 Fire protection. The *person* preparing the flaming foods or beverages shall have a wet cloth towel immediately available for use in smothering the flames in the event of an emergency.

308.1.8 Aisles and exits. Candles shall be prohibited in areas where occupants stand, or in an *aisle* or *exit*.

Exception: Candles used in religious ceremonies. See Section 308.1.6.

308.1.9 Open-flame decorative devices. Open-flame decorative devices used in assembly areas, dining areas of restaurants or drinking establishments shall comply with all of the following restrictions:
1. Class I and Class II liquids and LP-gas shall not be used.
2. Liquid- or solid-fueled lighting devices containing more than 8 ounces (237 ml) of fuel must self-extinguish and not leak fuel at a rate of more than 0.25 teaspoon per minute (1.26 ml per minute) if tipped over.
3. The device or holder shall be constructed to prevent the spillage of liquid fuel or wax at the rate of more \ than 0.25 teaspoon per minute (1.26 ml per minute) when the device or holder is not in an upright position.
4. The device or holder shall be designed so that it will return to the upright position after being tilted to an angle of 45 degrees from vertical.

Exception: Devices that self-extinguish if tipped over and do not spill fuel or wax at the rate of more than 0.25 teaspoon per minute (1.26 ml per minute) if tipped over.

5. The flame shall be enclosed except where openings on the side are not more than 0.375 inch (9.5 mm) diameter or where openings are on the top and the distance to the top is such that a piece of tissue paper placed on the top will not ignite in 10 seconds.
6. Chimneys shall be made of noncombustible materials and securely attached to the open-flame device.
   Exception: A chimney is not required to be attached to any open-flame device that will self-extinguish if the device is tipped over.
7. Fuel canisters shall be safely sealed for storage.
8. Storage and handling of *combustible liquids* shall be in accordance with Chapter 34.
9. Shades, where used, shall be made of noncombustible materials and securely attached to the open flame device holder or chimney.
10. Candelabras with flame-lighted candles shall be securely fastened in place to prevent overturning, and shall be located away from occupants using the area and away from possible contact with drapes, curtains or other combustibles.

308.2 Permits required. Permits shall be obtained from the *fire code official* in accordance with Section 105.6 prior to engaging in the following activities involving open flame, fire and burning:

1. Use of a torch or flame-producing device to remove paint from a structure.
2. Use of open flame, fire or burning in connection with Group A or E occupancies.
3. Use or operation of torches and other devices, machines or processes liable to start or cause fire in or upon wildfire risk areas.

308.3 Group A occupancies. Open-flame devices shall not be used in a Group A occupancy.

Exceptions:

1. Open-flame devices are allowed to be used in the following situations, provided *approved* precautions are taken to prevent ignition of a combustible material or injury to occupants:
   1.1. Where necessary for ceremonial or religious purposes in accordance with Section 308.1.((~~7~~))6.
   1.2. On stages and platforms as a necessary part of a performance in accordance with Section 308.3.((~~2~~))1.
   1.3. Where candles on tables are securely supported on substantial noncombustible bases and the candle flames are protected.
2. Heat-producing equipment complying with Chapter 6 and the *International Mechanical Code*.
3. Gas lights are allowed to be used provided adequate precautions satisfactory to the *fire code official* are taken to prevent ignition of combustible materials.

((~~**308.3.1 Open-flame decorative devices.** Open-flame decorative devices shall comply with all of the following restrictions:~~

~~1. Class I and Class II liquids and LP-gas shall not be used.~~

~~2. Liquid- or solid-fueled lighting devices containing more than 8 ounces (237 ml) of fuel must self-extinguish and not leak fuel at a rate of more than 0.25 teaspoon per minute (1.26 ml per minute) if tipped over.~~

~~3. The device or holder shall be constructed to prevent the spillage of liquid fuel or wax at the rate of more \ than 0.25 teaspoon per minute (1.26 ml per minute) when the device or holder is not in an upright position.~~

~~4. The device or holder shall be designed so that it will return to the upright position after being tilted to an angle of 45 degrees from vertical.~~

~~**Exception:** Devices that self-extinguish if tipped over and do not spill fuel or wax at the rate of more than 0.25 teaspoon per minute (1.26 ml per minute) if tipped over.~~

~~5. The flame shall be enclosed except where openings on the side are not more than 0.375 inch (9.5 mm) diameter or where openings are on the top and the distance to the top is such that a piece of tissue paper placed on the top will not ignite in 10 seconds.~~

~~6. Chimneys shall be made of noncombustible materials and securely attached to the open-flame device.~~

~~**Exception:** A chimney is not required to be attached to any open-flame device that will self-extinguish if the device is tipped over.~~

~~7. Fuel canisters shall be safely sealed for storage.~~

~~8. Storage and handling of *combustible liquids* shall be in accordance with Chapter 34.~~

~~9. Shades, where used, shall be made of noncombustible materials and securely attached to the open flame device holder or chimney.~~

~~10. Candelabras with flame-lighted candles shall be securely fastened in place to prevent overturning, and shall be located away from occupants using the area and away from possible contact with drapes, curtains or other combustibles.~~))

308.3.((~~2~~))**1 Theatrical performances.** Where *approved*, open-flame devices used in conjunction with theatrical performances are allowed to be used when adequate safety precautions have been taken in accordance with NFPA 160.

308.4 Group R occupancies. Open flame, fire and burning in Group R occupancies shall comply with the requirements of Sections 308.1 through 308.1.((~~6~~))5.2 and 308.4.1.

***

310.3 "No Smoking" signs. The *fire code official* is authorized to order the posting of "No Smoking" signs in a conspicuous location in each structure or location in which smoking is prohibited. The content, lettering, size, color and location of required "No Smoking" signs shall be *approved*.

310.3 Point of Information

See *Seattle Municipal Code* 10.64 for requirements for posting "no smoking" signs in public places.

***

311.1.1 Abandoned premises. Buildings, structures and premises ((~~for which an *owner* cannot be identified or located by dispatch of a certificate of mailing to the last known or registered address,~~)) which persistently or repeatedly become unprotected or unsecured, which have been occupied by unauthorized *persons* or for illegal purposes, or which present a danger of structural collapse or fire spread to adjacent properties ((~~shall~~))may be considered abandoned, declared unsafe and abated by demolition or rehabilitation in accordance with the ((~~*International Property Maintenance Code* and the~~)) *International Building Code and Seattle Municipal Code*.

***

311.2.2 Fire protection. Fire alarm, sprinkler and standpipe systems shall be maintained in an operable condition at all times.

Exceptions:

1. When the premises have been cleared of all combustible materials and debris and, in the opinion of the *fire code official*, the type of construction, *fire separation distance* and security of the premises do not create a fire hazard.
2. Where *approved* by the *fire code official*((~~chief~~)), buildings that will not be heated and where *fire protection systems* will be exposed to freezing temperatures, fire alarm and sprinkler systems are permitted to be placed out of service and standpipes are permitted to be maintained as dry systems (without an automatic water supply), provided the building has no contents or storage, and windows, doors and other openings are secured to prohibit entry by unauthorized *persons*.

***

311.3 Removal of combustibles. *Persons* owning, or in charge or control of, a vacant building or portion thereof, shall remove therefrom all accumulations of combustible materials, flammable or combustible waste or rubbish and shall securely lock or otherwise secure doors, windows and other openings to prevent entry by unauthorized *persons*. The premises shall be maintained clear of waste or hazardous materials.

Exception((~~s~~)):

((~~1.~~))Buildings or portions of buildings undergoing additions, *alterations*, repairs or change of occupancy in accordance with the *International Building Code*, where waste is controlled and removed as required by Section 304.

((~~2. Seasonally occupied buildings.~~))

***

311.5 Placards. ((~~A~~))If any vacant or abandoned buildings or structures are determined to be unsafe pursuant to Section 110 of this code relating to structural or interior hazards the fire code

official shall be authorized to require marking((~~shall be marked~~)) as required by Sections 311.5.1 through 311.5.5.

***

SECTION 313
FUELED EQUIPMENT

313.1 General. Fueled equipment including, but not limited to, ((~~motorcycles, mopeds~~)) lawn-care equipment, portable generators and portable cooking equipment, shall not be stored, operated or repaired within a building.

Exceptions:

1. Buildings or rooms constructed for such use in accordance with the *International Building Code*.
2. If a temporary permit for exhibits, trade shows or special events has been issued in accordance with section 105.6.13. ((~~Where allowed by Section 314.~~))
3. Storage of equipment utilized for maintenance purposes is allowed in *approved* locations when the aggregate fuel capacity of the stored equipment does not exceed 10 gallons (38 L) and the building is equipped throughout with an *automatic sprinkler system* installed in accordance with Section 903.3.1.1.

313.2 Fueled motor vehicles and watercraft. Fueled motor vehicles and watercraft, including but not limited to motorcycles, mopeds, and motor boats, shall not be stored, operated or repaired within a building.

Exceptions:

1. Buildings or rooms constructed for such use in accordance with the *International Building Code*.
2. If under a temporary permit for exhibits, trade shows, or special events in accordance with Section 106.6.14.

313.3((~~1.1~~)) Removal. The *fire code official* is authorized to require removal of fueled equipment, motor vehicles or watercraft from locations where the presence of such equipment, motor vehicles or watercraft is determined by the *fire code official* to be hazardous.

313.4((~~2~~)) Group R occupancies. Motor ((~~V~~))vehicles and watercraft powered by flammable liquids, Class II *combustible liquids* or compressed flammable gases shall not be stored within the living space of Group R buildings.

***

315.2.2.1 Storage under stairways. Storage is prohibited under exit stairways.
Exception: Enclosures under stairways in accordance with Section 1009.6.3.

***

315.2.5 Storage arrangements. Storage shall be within 20 feet (6096mm) of the two aisles each at least 44 inches (13411mm) wide. No block pile shall exceed 40 feet by 40 feet (12192mm by 12192mm) unless approved by the *fire code official*. No dead-end aisle shall be longer than 10 times the width. All storage in unsprinklered areas shall be within 150 feet (45720mm) aisle travel of fire department exterior access openings. Storage shall not obstruct access to extinguishers, standpipe outlets, sprinkler control shut down and safety controls or fire department access openings (for high-piled storage, see Chapter 23).

***

SECTION 318
FIXED GUIDEWAY TRANSIT AND PASSENGER RAIL SYSTEMS

318.1 Fixed guideway transit and passenger rail systems. Fixed guideway transit and passenger rail systems shall be in accordance with NFPA 130 as amended.

318 Point of Information

Adopted local amendments to NFPA 130 can be accessed at http://www.seattle.gov/fire/FMO/firecode/nfpaAmendments.htm

SECTION 319
ROAD TUNNELS, BRIDGES AND OTHER LIMITED ACCESS HIGHWAYS

319.1 Road tunnels, bridges and other limited access highways. Road tunnels, bridges, and other limited access highways shall be in accordance with NFPA 502 as amended.

319 Point of Information

Adopted local amendments to NFPA 502 can be accessed at http://www.seattle.gov/fire/FMO/firecode/nfpaAmendments.htm

Section 6. Chapter 4 of the 2009 International Fire Code is amended as follows:

***

[W] 401.2 Approval. Where required by ((~~this code~~))the *fire code official*, fire safety plans, emergency procedures and employee training programs shall be *approved*((~~ by the *fire code official*~~)).

***

401.3.2 Alarm activations. Upon activation of a fire or emergency alarm signal, employees or staff shall immediately notify the fire department.

***

401.9 Evacuation required. In the event of activation of a fire or emergency alarm, occupants of the building or portion of the building in which the alarm is activated shall make a safe and orderly evacuation out of the building, or as provided in the building's fire safety and evacuation plan.

Exceptions:

1. Where the occupant's physical or other disability makes the occupant unable to evacuate without assistance and no assistance is immediately available; or
2. Where the presence of smoke, fire, structural collapse or other hazard or obstruction in the occupant's means of egress makes evacuation unsafe.

***

SECTION 402
DEFINITIONS

402.1 Definition. The following words and terms shall, for the purposes of this chapter and as used elsewhere in this code, have the meanings shown herein.

[W] ALARM SIGNAL. See Section 902.1.

[W] ALERT SIGNAL. A distinctive signal indicating the need for trained personnel and occupants to initiate a specific action, such as lockdown or shelter-in-place.

EMERGENCY ((~~EVACUATION~~))DRILL. An exercise performed to train staff and occupants and to evaluate their efficiency and effectiveness in carrying out emergency procedures.

LOCKDOWN. An emergency situation, in other than a Group I-3 occupancy, requiring that the occupants be sheltered and secured in place within a building when normal evacuation would put occupants at risk.

[W] FULL LOCKDOWN. Occupants remain out of sight and as quiet as possible, with only limited authorized entry, exit, or movement within the building. Occupants in corridors, common areas, or unsecured areas move quickly to the nearest secured area.

[W] MODIFIED LOCKDOWN. Occupants of a facility are isolated from potential outside threats by remaining within a building with exterior doors and other exits secured, and that entry and exit from the building is limited to that which is authorized. During a modified lockdown, interior movement and other activities within the building may be allowed or restricted in accordance to the lockdown plan.

[W] SHELTER-IN-PLACE. An emergency response used to minimize exposure of facility occupants to chemical or environmental hazards by taking refuge in predetermined interior rooms or areas where actions are taken to isolate the interior environment from the exterior hazard.

[W] RECALL SIGNAL. An electrically or mechanically operated signal used to recall occupants after an emergency drill or to terminate a lockdown or shelter-in-place event that shall be distinct from any alarm or alert signal used to initiate an emergency plan, or other signals.

SECTION 403
PUBLIC ASSEMBLAGES AND EVENTS

403.1 Fire watch and standby fire personnel. When, in the opinion of the *fire code official*, it is essential for public safety in a place of assembly or any other place where people congregate, because of the number of *persons*, or the nature of the performance, exhibition, display, contest or activity, the *owner*, agent or lessee shall provide, at no cost to the jurisdiction, one or more fire watch personnel or *standby fire personnel*, as required and *approved*, to remain on duty during the times such places are open to the public, or when such activity is being conducted.

403.1.1 Duties. Fire watch personnel shall keep diligent watch for fires, obstructions to *means of egress* and other hazards during the time such place is open to the public or such activity is being conducted and take prompt measures for remediation of hazards, extinguishment of fires that occur and assist in the evacuation of the public from the structures. *Fire watch* personnel and *standby fire personnel* are subject to the *fire code official's* orders at all times; shall remain on duty during the times such places are open to the public, or as otherwise required by *fire code official;* and shall not be required or permitted, while on duty, to perform any duties other than those specified by the *fire code official.*

Where a *fire protection system* is out of service, the procedures detailed in Administrative Rule 9.06.07, *Out-Of-Service Fire and Life Safety Systems* and any future revisions of this rule adopted by the *fire code official* shall be implemented.

***

[W] SECTION 404
FIRE SAFETY AND ((~~EVACUATION~~))EMERGENCY PLANS

[W] 404.1 General. Fire safety, evacuation, shelter-in-place and lockdown plans and associated drills shall comply with the requirements of Sections 404.2 through 404.5.1.

[W] 404.2 Fire safety and evacuation plans. Fire safety and evacuation plans shall comply with the requirements of Sections 404.2.1 through 404.2.2.2.

[W] 404.2.1 Where required. A((~~n *approved*~~)) fire safety and evacuation plan shall be prepared and maintained for the following occupancies and buildings.
1. Group A((~~, other than Group A occupancies used exclusively for purposes of religious worship that have an occupant load less than 2,000~~))having an *occupant load* of 100 or more.
2. Group B buildings having an *occupant load* of 500 or more *persons* or more than 100 *persons* above or below the lowest *level of exit discharge*.
3. Group E.
4. Group F buildings having an *occupant load* of 500 or more *persons* or more than 100 *persons* above or below the lowest *level of exit discharge*.
5. Group H.
6. Group I.
7. Group R-1.
8. Group R-2 college and university buildings((~~.~~)) and boarding homes, group homes and residential treatment facilities licensed by the State of Washington.
((~~9. Group R-4.~~))
((~~10.~~))9. High-rise buildings.
((~~11.~~))10. Group M buildings having an *occupant load* of 500 or more *persons* or more than 100 *persons* above or below the lowest *level of exit discharge*.
((~~12.~~))11. Covered malls exceeding 50,000 square feet (4645 m2) in aggregate floor area.
((~~13.~~))12. Underground buildings.
((~~14.~~))13. Buildings with an atrium and having an occupancy in Group A, E or M.

404.2.1 Point of Information

The State of Washington does not adopt Group R-4 occupancies. Group R-4 occupancies are considered "Group R-2 occupancies licensed by the State of Washington". Special provisions may apply.

[W] 404.((~~3~~))2.2 Contents. Fire evacuation and safety plan contents shall be in accordance with Sections 404.2.2.1 and 404.2.2.2.

[W] 404.((~~3~~))2.2.1 Fire evacuation plans. Fire evacuation plans shall include the following:

1. Emergency egress or escape routes and whether evacuation of the building is to be complete or, where *approved*, by selected floors or areas only.
2. Procedures for employees who must remain to operate critical equipment before evacuating.
3. Procedures for assisted rescue for *persons* unable to use the general *means of egress* unassisted.
4. Procedures for accounting for employees and occupants after evacuation has been completed.
5. Identification and assignment of personnel responsible for rescue or emergency medical aid.
6. The preferred and any alternative means of notifying occupants of a fire or emergency.
7. The preferred and any alternative means of reporting fires and other emergencies to the fire department or designated emergency response organization.
8. Identification and assignment of personnel who can be contacted for further information or explanation of duties under the plan.
9. A description of the emergency voice/alarm communication system alert tone and preprogrammed voice messages, where provided.

[W] 404.((~~3~~))2.2.2 Fire safety plans. Fire safety plans shall include the following:

1. The procedure for reporting a fire or other emergency.

2. The life safety strategy and procedures for notifying, relocating or evacuating occupants, including occupants who need assistance.

3. Site plans indicating the following:
   3.1. The occupancy assembly point.
   3.2. The locations of fire hydrants.
   3.3. The normal routes of fire department vehicle access.

4. Floor plans identifying the locations of the following:
   4.1. Exits.
   4.2. Primary evacuation routes.
   4.3. Secondary evacuation routes.
   4.4. Accessible egress routes.
   4.5. Areas of refuge.
   4.6. Exterior areas for assisted rescue.
   4.7. Manual fire alarm boxes.
   4.8. Portable fire extinguishers.
   4.9. Occupant-use hose stations.
   4.10. Fire alarm annunciators and controls.

5. A list of major fire hazards associated with the normal use and occupancy of the premises, including maintenance and housekeeping procedures.

6. Identification and assignment of personnel responsible for maintenance of systems and equipment installed to prevent or control fires.

7. Identification and assignment of personnel responsible for maintenance, housekeeping and controlling fuel hazard sources.

[W] 404.3 Shelter-in-place and lockdown plans. Shelter-in-place and lockdown plans shall comply with the requirements of Sections 404.3.1 through 404.3.3.

[W] 404.3.1 Where required. A shelter-in-place and lockdown plan shall be prepared and maintained for all Group E occupancies.

Exception: Daycares not collocated on a Group E campus.

[W] 404.3.2 Shelter-in-place plan contents. Shelter-in-place plans shall include the following:

1. Identification of the procedures for initiating the shelter-in-place plan throughout the facility or campus.
2. Identification of prearranged alert and recall signals to notify all occupants.
3. Identification of procedures for reporting the facility is sheltering-in-place to the local emergency dispatch center.
4. A means of two-way communication between a central location and each secure area.
5. Identification of protective security measures.
6. Location of emergency supplies.
7. Accountability procedures for staff to report the presence or absence of occupants.

8. Identification of crisis response team members in accordance with the National Incident Management System.
9. Actions to be taken in the event of a fire or medical emergency while sheltering-in-place.

((**404.3.3 Lockdown plans.** ~~Where facilities develop a lockdown plan, the lockdown plan shall be in accordance with Sections 404.3.3.1 through 404.3.3.3.~~))

[W] 404.3.3((~~.1~~)) Lockdown plan contents. Lockdown plans shall ((~~be *approved* by the *fire code official* and shall~~))include the following:

1. Identification of the procedures of initiating the lockdown plan throughout the facility or campus.
2. Identification of prearranged alert and recall signals to notify all occupants.
3. Identification of procedures for access to the facility for emergency responders.
4. Identification of procedures for reporting the facility is in lockdown to the local emergency dispatch center.
5. A means of two-way communication between a central location and each secure area.
6. Identification of protective security measures.
7. Location of emergency supplies.
8. Accountability procedures for staff to report the presence or absence of occupants.
9. Identification of crisis response team members in accordance with the National Incident Management System emergency while in lockdown.
10. Actions to be taken in the event of a fire or medical emergency while in lockdown.

((~~1. Initiation. The plan shall include instructions for reporting an emergency that requires a lockdown.~~
~~2. Accountability. The plan shall include accountability procedures for staff to report the presence or absence of occupants.~~
~~3. Recall. The plan shall include a prearranged signal for returning to normal activity.~~
~~4. Communication and coordination. The plan shall include an *approved* means of two-way communication between a central location and each secured area.~~))

((~~**404.3.3.2 Training frequency.** The training frequency shall be included in the lockdown plan. The lockdown drills shall not substitute for any of the fire and evacuation drills required in Section 405.2.~~))
((~~**404.3.3.3 Lockdown notification.** The method of notifying building occupants of a lockdown shall be included in the plan. The method of notification shall be separate and distinct from the fire alarm signal.~~))

404.4 Maintenance. Fire safety ((~~and~~)), evacuation, shelter-in-place and lockdown plans shall be reviewed or updated annually or as necessitated by changes in staff assignments, occupancy or the physical arrangement of the building.

404.5 Availability. Fire safety ((~~and~~)), evacuation, shelter-in-place and lockdown plans shall be available in the workplace for reference and review by employees, and copies shall be furnished to the *fire code official* for review upon request.

***

[W] SECTION 405
EMERGENCY ((~~EVACUATION~~))DRILLS

[W] 405.1 General. Emergency ((~~evacuation~~))drills complying with the provisions of this section shall be conducted at least annually in the occupancies listed in Section 404.2.1 or when required by the *fire code official*. Drills shall be designed in cooperation with the local authorities.

[W] 405.2 Frequency. Required emergency ((~~evacuation~~))drills shall be held at the intervals specified in Table 405.2 or more frequently where necessary to familiarize all occupants with the drill procedure.

405.2.1 Group E Occupancies. At a minimum the following drills shall be conducted during each year.

1. One drill using the school mapping information system
   Exception: Daycares not co-located on a school campus.
2. Six fire evacuation drills
3. One shelter-in-place drill
4. One lockdown drill

TABLE 405.2
((~~FIRE AND EVACUATION~~))EMERGENCY DRILL FREQUENCY AND PARTCIPATION

GROUP OR OCCUPANCY	FREQUENCY	PARTICIPATION
Group A	Quarterly	Employees
Group B[c]	Annually	Employees
Group E	Monthly[a,e]	All occupants
Group F	Annually	Employees
Group I	Quarterly on each shift	Employees((~~b~~))

Group R-1	Quarterly on each shift	Employees
Group R-2[f]	Quarterly on each shift	Employees
Group R-2[d]	Four Annually	All occupants
((~~Group R-4~~))	((~~Quarterly on each shift~~))	((~~Employees~~[b]))
High-rise buildings	Annually	((~~Employees~~))All occupants[b]

a. The frequency ((~~shall~~))may be allowed to be modified in accordance with Section 408.3.2.
b. ((~~Fire and evacuation drills in residential care assisted living facilities shall include complete evacuation of the premises in accordance with Section 408.10.5. Where occupants receive habilitation or rehabilitation training, fire prevention and fire safety practices shall be included as part of the training program.~~))Jail inmates, hospital patients, hotel guests and occupants of apartment or residential condominium units are not required to participate, unless the jail inmate, hospital patient, hotel guest, or occupant of an apartment or residential condominium is also a member of the high-rise building staff.
c. Group B buildings having an occupant load of 500 or more persons or more than 100 persons above or below the lowest level of exit discharge.
d. Applicable to Group R-2 college and university buildings in accordance with Section 408.3.
e. Daycares collocated on a Group E campus shall participate in emergency drills occurring on the campus.
f. Boarding homes, group homes, and residential treatment facilities licensed by the state of Washington.

Table 405.2 Point of Information

The State of Washington does not adopt Group R-4 occupancies. Group R-4 occupancies are considered "Group R-2 occupancies licensed by the state of Washington". Special provisions may apply.

***

[W] 405.5 Record keeping. Records shall be maintained of required emergency evacuation drills and include the following information:

1. Identity of the *person* conducting the drill.
2. Date and time of the drill.
3. Notification method used.
4. Staff members on duty and participating.
5. Number of occupants ((~~evacuated~~))participating.
6. Special conditions simulated.
7. Problems encountered and corrective actions taken.
8. Weather conditions when occupants were evacuated.
9. Time required to accomplish complete evacuation, lockdown, or shelter-in-place.

[W] 405.6 Notification. Where required by the *fire code official*, prior notification of emergency ((~~evacuation~~))drills shall be given to the *fire code official*.

[W] 405.7 Initiation. Emergency drills shall be initiated in accordance with Sections 405.7.1 through 405.7.3.

405.7.1 Fire evacuation drills. Where a fire alarm system is provided, emergency evacuation drills shall be initiated by activating the fire alarm system. The fire alarm monitoring company shall be notified prior to the activation of the fire alarm system for a proposed drill and again at the conclusion of the transmission and restoration of the fire alarm system to normal mode.

Exception: Evacuation drills conducted between the hours of 9 p.m. and 6 a.m. in Group R-2 boarding homes, group homes, and residential treatment facilities licensed by the State of Washington are not required to be initiated by the fire alarm system.

[W] 405.7.2 Shelter-in-place drills. Shelter-in-place drills shall be initiated by the shelter-in-place alert signal, generated by the alerting system in accordance with Section 915.

[W] 405.7.3 Lockdown drills. Lockdown drills shall be initiated from the lockdown alert signal.

[W] 405.8 Accountability. As building occupants arrive at the assembly point, efforts shall be made to determine if all occupants have been successfully evacuated, locked down or sheltered-in-place have been accounted for.

[W] 405.9 Recall and reentry. ((~~An electrically or mechanically operated signal used to recall occupants after an evacuation shall be separate and distinct from the signal used to initiate the evacuation.~~))The recall signal initiation means shall be manually operated and under the control of the *person* in charge of the premises or the official in charge of the incident. No one shall reenter the premises until authorized to do so by the official in charge.

SECTION 406

EMPLOYEE TRAINING AND RESPONSE PROCEDURES

406.1 General. Employees in the occupancies listed in Section 404.2.1 shall be trained in the ((~~fire~~))emergency procedures described in their ((~~fire evacuation and fire safety~~)) emergency plans. Training shall be based on the matters contained in the plans required and ((~~these plans and as~~))described in Sections 404.2 and 404.3.

[W] 406.2 Frequency. Employees shall receive training in the contents of the ((~~fire safety and evacuation~~))emergency plans and their duties as part of new employee orientation and at least annually thereafter. Records shall be kept and made available to the *fire code official* upon request.

[W] 406.3 Employee training program. Employees shall be trained in fire prevention, evacuation, sheltering-in-place, lockdown and fire safety in accordance with Sections 406.3.1 through 406.3.4.

***

[W] 406.3.3 Emergency shelter-in-place and lockdown training. Where a facility has a shelter-in-place or lockdown plan, employees shall be trained on the alert and recall signals, communication system, location of emergency supplies, the use of the incident notification and alarm system and their assigned duties and procedures in the event of an ((~~emergency lockdown~~))alarm or emergency.

***

407.2 Material Safety Data Sheets. Material Safety Data Sheets (MSDS) for all hazardous materials shall be either readily available on the premises as a paper copy, or where *approved*, shall be ((~~permitted to be~~))readily retrievable by electronic access.

***

407.7 Facility closure plans. When required by the *fire code official*, t((~~T~~))he permit holder or applicant shall submit to the *fire code official* a facility closure plan in accordance with Section 2701.6.3 to terminate storage, dispensing, handling or use of hazardous materials.

***

[W] 408.10 Group R-4 occupancies. This section is not adopted. ((~~Group R-4 occupancies shall comply with the requirements of Sections 408.10.1 through 408.10.5 and Sections 401 through 406.~~))

((~~**408.10.1 Fire safety and evacuation plan.** The fire safety and evacuation plan required by Section 404 shall include special staff actions, including fire protection procedures necessary for residents, and shall be amended or revised upon admission of a resident with unusual needs.~~

~~**408.10.2 Staff training.** Employees shall be periodically instructed and kept informed of their duties and responsibilities under the plan. Such instruction shall be reviewed by the staff at least every two months. A copy of the plan shall be readily available at all times within the facility.~~

~~**408.10.3 Resident training.** Residents capable of assisting in their own evacuation shall be trained in the proper actions to take in the event of a fire. The training shall include actions to take if the primary escape route is blocked. Where the resident is given rehabilitation or habilitation training, training in fire prevention and actions to take in the event of a fire shall be a part of the rehabilitation training program. Residents shall be trained to assist each other in case of fire to the extent their physical and mental abilities permit them to do so without additional personal risk.~~

~~**408.10.4 Drill frequency.** Emergency evacuation drills shall be conducted at least six times per year, two times per year on each shift. Twelve drills shall be conducted in the first year of operation. Drills are not required to comply with the time requirements of Section 405.4.~~

~~**408.10.5 Resident participation.** Emergency evacuation drills shall involve the actual evacuation of residents to a selected assembly point and shall provide residents with experience in exiting through all required exits. All required exits shall be used during emergency evacuation drills.~~
~~**Exception:** Actual exiting from windows shall not be required. Opening the window and signaling for help shall be an acceptable alternative.)~~)

408.10 Point of Information

The State of Washington does not adopt Group R-4 occupancies. Group R-4 occupancies are considered "Group R-2 occupancies licensed by the State of Washington". Special provisions may apply.

***

408.11.1.1 Submittal((~~Approval~~)). The lease plan shall be submitted to the *fire code official* when required, and shall be maintained on site for immediate reference by responding fire service personnel.

***

Section 7. Chapter 5 of the 2009 International Fire Code is amended as follows:

***

SECTION 502
DEFINITIONS

***

FIRE DEPARTMENT MASTER KEY. A limited issue key of special or controlled design to be carried by fire department officials in command which will open key boxes on specified properties.

502.1 Point of Information

The *fire code official* has approved the "KnoxBox" as the access key box for use in the City of Seattle.

***

503.1 Where required. Fire apparatus access roads shall be provided and maintained in accordance with Sections 503.1.1 through 503.1.3 and Appendix D as amended.

***

503.2.1 Dimensions. Fire apparatus access roads shall have an unobstructed width of not less than 20 feet (6096 mm), exclusive of shoulders, except for *approved* security gates in accordance with Section 503.6, and an unobstructed vertical clearance of not less than ((~~13 feet 6 inches (4115 mm)~~)) 14 feet.

Exceptions:

1. Access roads serving not more than two Group R-3 or U occupancies shall have an unobstructed width of not less than 12 feet.
2. Public streets shall be in accordance with Seattle Right of Way Improvements Manual.

***

503.2.4 Turning radius. The required turning radius of a fire apparatus access road shall be ((~~determined by the *fire code official*.~~))25 feet minimum inside curb and 50 feet minimum outside curb.

Exception: Turnarounds in accordance with Appendix D as amended.

503.2.5 Dead ends. Dead-end fire apparatus access roads in excess of 150 feet (45 720 mm) in length shall be provided with a turnaround in accordance with Appendix D as amended.((~~an *approved* area for turning around fire apparatus.~~))

503.2.6 Bridges and elevated surfaces. Where a bridge or an elevated surface is part of a fire apparatus access road, the bridge shall be constructed and maintained in accordance with the Seattle Right of Way Improvements Manual. ((~~AASHTO HB 17.~~)) Bridges and elevated surfaces shall be designed for a live load sufficient to carry the imposed loads of fire apparatus. Vehicle load limits shall be posted at both entrances to bridges when required by the *fire code official*. Where elevated surfaces designed for emergency vehicle use are adjacent to surfaces which are not designed for such use, *approved* barriers, *approved* signs or both shall be installed and maintained when required by the *fire code official*.

503.2.7 Grade. The grade of the fire apparatus access road shall be in accordance with Appendix D as amended. ((~~within the limits established by the *fire code official* based on the fire department's apparatus.~~))

503.2.8 Angles of approach and departure. The angles of approach and departure for fire apparatus access roads shall be in accordance with the Seattle Right of Way Improvements manual. ((~~within the limits established by the *fire code official* based on the fire department's apparatus.~~))

503.3 Marking. Where required by the *fire code official*, *approved* signs or other *approved* notices or markings that include the words NO PARKING—FIRE LANE shall be provided for fire apparatus access roads to identify such roads or prohibit the obstruction thereof. The ((~~means~~))signs, notices and markings by which *fire lanes* are designated shall be maintained in a clean and legible condition at all times and be replaced or repaired when necessary to provide adequate visibility.

***

503.6 Security gates. The installation of security gates across a fire apparatus access road shall be *approved* by the *fire code official*((~~chief~~)). Where security gates are installed, they shall have an *approved* means of emergency operation. The security gates and the emergency operation shall be maintained operational at all times. Electric gate operators, where provided, shall be *listed* in accordance with UL 325. Gates intended for automatic operation shall be designed, constructed and installed to comply with the requirements of ASTM F 2200.

***

505.1 Address identification. New and existing buildings shall have *approved* address numbers, building numbers or *approved* building identification placed in a position that is plainly legible and visible from the street or road fronting the property. These numbers shall contrast with their background. Address numbers shall be Arabic numbers or alphabetical letters. Numbers shall be a minimum of 4 inches (101.6 mm) high for Group R occupancies and a minimum of 5 inches for other occupancies with a minimum stroke width of 0.5 inch (12.7 mm). Where access is by

means of a private road and the building cannot be viewed from the *public way*, a monument, pole or other sign or means shall be used to identify the structure.

505.2 Street or road signs. Streets and roads shall be identified with *approved* signs. Temporary signs shall be installed at each street intersection when construction of new roadways allows passage by vehicles. Signs shall be of an *approved* size, weather resistant and be maintained until replaced by permanent signs.

505.2 Point of Information

Where marking is required, the signs shall be posted by the Seattle Department of Transportation for city streets and right-of-ways, and by the owners for private property.

***

506.1 Where required. Where access to or within a structure or an area is restricted because of secured openings or where immediate access is necessary for life-saving or fire-fighting purposes, the *fire code official* is authorized to require a key box to be installed in an *approved* location. The key box shall be of an *approved* type and shall contain keys to gain necessary access as required by the *fire code official*.

506.1 Point of Information

The *fire code official* has approved the "KnoxBox" as the access key box for use in the City of Seattle. For more information see Seattle Fire Department Information Bulletin #965 Key Boxes for Emergency Access.

***

506.3 Elevator key box. An elevator key box locked and keyed to the standard city elevator access key shall be provided. The elevator key box shall meet the following standards:

1. Dimensions – 6.5 inches (165 mm) high, 6 inches (152 mm) wide and 2 inches (50 mm) deep.
2. Material – 16 gauge steel welded.
3. Color – red unless located in the main lobby above the call button, six feet nominal above the floor, in which case any color is approved.
4. Labeling – "FOR EMERGENCY USE."

5. Lock – Ace 1-inch (25 mm) cylinder cam lock key #39504.

The elevator key box is to be installed at the designated recall floor above the Phase I recall switch or in the main lobby above the hall call button when no recall feature exists. The elevator key box is to be mounted 6 feet (1829 mm) nominal above the floor. Other locations may be approved by the building official upon request, with notification to the *fire code official*.

506.3.1 Elevator keys. Keys for access to and for the operation of elevator equipment shall be tagged, labeled and retained in the key box. The elevator key box shall contain fire emergency service keys (Phase I and II, one key for each switch). The elevator key box may, in addition, contain keys for any or all of the following:

1. Machine room door;
2. Secondary level door;
3. Pit door;
4. Roof door;
5. Independent, hospital emergency and/or attendant operation;
6. Hoistway access;
7. Mechanical hoist access devices (broken arm, lunar, etc.);
8. Miscellaneous switch keys;
9. Fire alarm panel room;
10. Sprinkler valve control room

506.3.1 Point of Information

Due to security consideration, elevator key boxes should not contain master keys to tenant spaces. Keys in elevator key boxes should be limited to those for access of the building systems and equipment listed in *Seattle Fire Code*, Section 506.3.1.

SECTION 507
FIRE PROTECTION WATER SUPPLIES

507.1 Required water supply. An *approved* water supply capable of supplying the required fire flow for fire protection shall be provided to premises upon which facilities, buildings or portions of buildings are hereafter constructed or moved into or within the jurisdiction, and for buildings undergoing a substantial alteration as determined by the Department of Planning and Development.

***

507.3 Fire flow. Fire flow requirements for buildings or portions of buildings and facilities shall be in accordance with Appendix B.((~~determined by an *approved* method.~~))

Exceptions:

1. Fire flow requirements for shipyards and designated marine hot work facilities shall be in accordance with Administrative Rule 26.02.09 and any future revisions to this rule adopted by the *fire code official*.
2. Fire flow requirements for new and existing covered marinas shall be in accordance with Chapters 45 and 94 respectively.

***

507.5.1 Where required. Where a portion of the facility or building hereafter constructed or moved into or within the jurisdiction is more than 500 feet (152 m) ((~~400 feet (122 m)~~)) from a hydrant on a fire apparatus access road, as measured by an *approved* route around the exterior of the facility or building, on site fire hydrants and mains shall be provided where required by the *fire code official*.

Exceptions:

1. For Group R-3 and Group U occupancies, the distance requirement shall be 600 feet (183 m).
2. For buildings equipped throughout with an *approved automatic sprinkler system* installed in accordance with Section 903.3.1.1 or 903.3.1.2, the distance requirement shall be 600 feet (183 m).

***

507.5.6 Physical protection. Where fire hydrants are subject to impact by a motor vehicle, guard posts or other *approved* means shall comply with Section 312. Any horizontal, lateral or diagonal elements that are a part of the protection for a fire hydrant shall not interfere with the ability to freely access and safely operate the hydrant.

***

508.1.5 Required features. The *fire command center* shall comply with NFPA 72 and shall contain the following features:

1. The emergency voice/alarm communication system control unit.
2. The fire department communications system.
3. Fire detection and alarm system annunciator.
4. Annunciator unit visually indicating the location of the elevators and whether they are operational.
5. Status indicators and controls for air distribution systems.
6. The fire-fighter's control panel required by Section 909.16 for smoke control systems installed in the building.
7. Controls for unlocking *stairway* doors simultaneously.

8. Sprinkler valve and water-flow detector display panels.
9. Emergency and standby power status indicators.
10. A telephone for fire department use with controlled access to the public telephone system.
11. Fire pump status indicators.
12. Schematic building plans indicating the typical floor plan and detailing the building core, *means of egress*, *fire protection systems*, fire-fighting equipment and fire department access, and the location of *fire walls*, *fire barriers*, *fire partitions*, *smoke barriers* and smoke partitions.
13. Work table.
((~~14. Generator supervision devices , manual start and transfer features.~~))
14. Public address system, where specifically required by other sections of this code.
15. Elevator fire recall switch in accordance with ASME A17.1.
16. Elevator emergency or standby power selector switch(es), where emergency or *legally-required standby power* is provided.
17. On-site fire protection water tank fill valve control switch, tank level indicators, tank low level alarm, and tank fill signal.

***

510.1 Emergency responder radio coverage in buildings. All buildings shall have *approved* radio coverage for emergency responders within the building based upon the existing coverage levels of the public safety communication systems of the jurisdiction at the exterior of the building. This section shall not require improvement of the existing public safety communication systems. The system shall meet the requirements of Appendix J of this code.

Exceptions:

1. Where *approved* by the building official and the *fire code official*, a wired communication system in accordance with Section 907.2.13.2 shall be permitted to be installed or maintained in lieu of an *approved* radio coverage system.
2. Where it is determined by the *fire code official* that the radio coverage system is not needed.
3. One and two family dwellings and townhouses.
4. Buildings constructed primarily of wood-frame (Type V) construction without below grade storage or parking areas.
5. Buildings that are 35 feet high (as defined by the *Seattle Building Code* Section 502) or less without below grade storage or parking areas.

((~~**510.2 Radio signal strength.** The building shall be considered to have acceptable emergency responder radio coverage when signal strength measurements in 95 percent of all areas on each floor of the building meet the signal strength requirements of Sections 510.2.1 and 510.2.2.~~))

((~~**510.2.1 Minimum signal strength into the building.** A minimum signal strength of -95 dBm shall be receivable within the building.~~))

((~~**510.2.2 Minimum signal strength out of the building.** A minimum signal strength of -100 dBm shall be received by the agency's radio system when transmitted from within the building.~~))

510.((~~3~~))2 Emergency responder radio coverage in existing buildings. Existing buildings that do not have approved radio coverage for emergency responders within the building shall be equipped with such coverage in accordance with Section 4603.8. ((~~according to one of the following:~~))
((~~1. Wherever existing wired communication system cannot be repaired or is being replaced, or where not *approved* in accordance with Section 510.1, Exception 1.~~))
((~~2. Within a time frame established by the adopting authority.~~))

Section 8. Chapter 6 of the 2009 International Fire Code is amended as follows:

***

601.1 Scope. The provisions of this chapter shall apply to the installation, operation and maintenance of fuel-fired appliances and heating systems, emergency and *legally required standby power systems*, electrical systems and equipment, mechanical refrigeration systems, elevator recall, stationary storage battery systems and commercial kitchen hoods.

601.2 Permits. Permits shall be obtained for refrigeration systems, ((~~and~~))battery systems and fuel tanks connected to emergency and *legally required standby power systems* as set forth in Sections 105.6 and 105.7.

***

602.1 Definitions. The following words and terms shall, for the purposes of this chapter and as used elsewhere in this code, have the meanings shown herein.

***

[M] HOOD. An air-intake device used to capture by entrapment, impingement, adhesion or similar means, grease and similar contaminants before they enter a duct system.

Type I. A kitchen hood for collecting and removing grease vapors and smoke((~~.~~))generated from medium-duty, heavy-duty, extra-heavy-duty, and some light-duty cooking appliances. Such hoods are equipped with a fire suppression system.

Type II. A general kitchen hood for collecting and removing steam, vapor, heat, odors and products of *combustion* generated from some light-duty cooking appliances.

***

603.1 Installation. The installation of nonportable fuel gas appliances and systems shall comply with the *International Fuel Gas Code*. The installation and/or use of all other fuel-fired appliances, ((~~other than internal combustion engines,~~))oil lamps and portable devices such as blow torches, melting pots and weed burners, shall comply with this section and the *International Mechanical Code.*

***

603.1.3 Electrical wiring and equipment. Electrical wiring and equipment used in connection with ((~~oil-burning equipment~~))fuel fired appliances shall be installed and maintained in accordance with Section 605 and NFPA 70.

***

603.1.6 Testing, diagrams and instructions. After installation of the fuel fired appliance((~~oil-burning equipment~~)), operation and combustion performance tests shall be conducted to determine that the appliance ((~~burner~~))is in proper operating condition and that all accessory equipment, controls, and safety devices function properly.

603.1.6.1 Diagrams. Contractors installing Industrial fuel fired appliances((~~oil-burning~~)) systems shall furnish not less than two copies of diagrams showing the main oil lines and controlling valves, one copy of which shall be posted at the fuel fired appliance((~~oil-burning equipment~~)) and another at an *approved* location that will be accessible in case of emergency.

***

603.1.7 Clearances. Working clearances between ((~~oil~~))fuel-fired appliances and electrical panel boards and equipment shall be in accordance with NFPA 70. ((~~Clearances between oil-fired equipment and oil supply tanks shall be in accordance with NFPA 31.~~))A minimum 5-foot (1524 mm) separation shall be maintained between fuel-fired appliances and equipment and fuel-oil supply tanks.

***

603.3 Fuel oil storage systems. Fuel oil storage systems shall be installed in accordance with Chapter 34 of this code. Fuel oil piping systems shall be installed in accordance with the *International Mechanical Code*.

***

[W] 603.4 Portable unvented heaters. Portable unvented fuel-fired heating equipment shall be prohibited in occupancies in Groups A, E, I, R-1, R-2, and R-3((~~and R-4~~)).

Exceptions:

1. *Listed* and *approved* unvented fuel-fired heaters, including portable outdoor gas-fired heating appliances, in one- and two-family *dwellings*.

2. Portable outdoor gas-fired heating appliances shall be allowed in accordance with Section 603.4.2.

***

603.4.2.1.1 Prohibited locations. The storage or use of portable outdoor gas-fired heating appliances is prohibited in any of the following locations:
1. Inside of any occupancy when connected to the fuel gas container.
2. Inside of tents, canopies and membrane structures.
3. On exterior balconies.

Exception: As allowed in Section 6.1((~~7~~))9 of NFPA 58.

***

603.4.2.2.5 Ignition sources. Smoking and open-flame devices (e.g., candles, flaming food or beverage preparation) are prohibited within 5 feet (1524 mm) of any gas-fired heating appliance. "No Smoking" signs shall be posted at affected areas.

603.4.2.2.6 Fire extinguishers. At least one portable fire extinguisher having a minimum rating of 2A:40BC shall be provided and mounted with the top located no higher than 5 feet (1524 mm) above grade. Travel distance to the extinguisher shall not exceed 50 feet (15 240 mm).

603.4.2.2.7 Leaking gas. In the event of a gas leak or suspected leak, the container shall be immediately removed from the premises. Periodic leak tests (with the use of soapy water) shall be conducted by trained personnel to ensure the container and fittings are tight.

603.4.2.2.8 Means of egress. Drinking and dining areas where portable gas-fired heating appliances are used shall be provided with at least two means of egress.

603.4.2.3 Gas containers. Fuel gas containers for portable outdoor gas-fired heating appliances shall comply with Sections 603.4.2.3.1 through 603.4.2.3.((**4**))5.

***

603.4.2.3.5 Outdoor Storage. Gas containers shall be located outside within lockable, ventilated metal storage lockers or racks in accordance with Sections 603.4.2.3.5.1 through 603.4.2.3.5.4.

603.4.2.3.5.1 Storage locker location. Ventilated metal storage lockers or racks shall be located at least 20 feet (6096 mm) from exits, building openings, public ways and designated smoking areas.
Exception: For a Group A occupancy, the storage locker or rack may be located in accordance with Table 3809.12 but not less than 20 feet from the Group A occupancy.

603.4.2.3.5.2 Security of storage locker. Ventilated metal storage lockers or racks shall be secured against unauthorized entry.

603.4.2.3.5.3 Vehicle protection. Ventilated metal storage lockers for gas containers shall be protected from vehicular impact in accordance with Section 312 if subject to possible vehicle impact.

603.4.2.3.5.4 Container position. Gas containers shall be stored in an upright position such that the pressure relief valve is in direct contact with the vapor phase of the container.

***

SECTION 604
EMERGENCY AND LEGALLY REQUIRED STANDBY POWER SYSTEMS

604.1 Installation. Except for the 2-hour on-premises fuel supply required for high-rise buildings in 604.2.14.1.1, ((~~E~~))emergency and *legally required standby power systems* required by this code or the *International Building Code* shall be installed in accordance with this code, NFPA 110 and NFPA 111. Existing installations shall be maintained in accordance with the original approval.

***

604.2 Where required. Emergency and *legally required standby power systems* shall be provided where required by Sections 604.2.1 through 604.2.18.4.

***

604.2.2 Smoke control systems. ((~~Standby~~))Emergency power shall be provided for smoke control systems in accordance with Section 909.11.
Exception: *Legally required standby power* is acceptable for shaft pressurization systems in low-rise buildings in accordance with Section 909.22.

***

604.2.5 Accessible means of egress elevators. *Legally required ((~~S~~))standby power* shall be provided for elevators that are part of an accessible *means of egress* in accordance with Section 1007.4.

604.2.6 Accessible means of egress platform lifts. *Legally required ((~~S~~))standby power* in accordance with this section or ASME A18.1 shall be provided for platform lifts that are part of an accessible *means of egress* in accordance with Section 1007.5.

604.2.7 Horizontal sliding doors. *Legally required((~~S~~))standby power* shall be provided for horizontal sliding doors in accordance with Section 1008.1.4.3.

***

604.2.9 Membrane structures. Emergency power shall be provided for *exit* signs in temporary tents and membrane structures in accordance with Section 2403.12.6.1. *Legally required((~~S~~))standby power* shall be provided for auxiliary inflation systems in permanent membrane structures in accordance with the *International Building Code*.

604.2.10 Hazardous materials. Emergency or *legally required standby power* shall be provided in occupancies with hazardous materials in accordance with Sections 2704.7 and 2705.1.5.

***

604.2.12 Organic peroxides. *Legally required ((~~S~~))standby power* shall be provided for occupancies with organic peroxides in accordance with Section 3904.1.11.

604.2.13 Covered mall buildings. Covered mall buildings exceeding 50,000 square feet (4645 m2) shall be provided with *legally required standby power* systems which are capable of operating the emergency voice/alarm communication.

604.2.14 High-rise buildings. ((~~Standby p~~))Power, light and emergency systems in high-rise buildings shall comply with the requirements of Sections 604.2.14.1 through 604.2.14.3.

604.2.14.1 ((~~Standby~~)) Emergency power. An ((~~standby~~)) emergency power system shall be provided. Where the ((~~standby~~)) emergency system is a generator set inside a building, the system shall be located in a separate room enclosed with 2-hour *fire barriers* constructed in accordance with Section 707 of the *International Building Code* or *horizontal assemblies* constructed in accordance with Section 712 of the *International Building Code*, or both. System supervision with manual start and transfer features shall be provided at the *fire command center*. **Exception:** A generator set with a fuel tank system not exceeding 660 gallons (2498.3 L) is not required to be located in a rated room if installed in a sprinklered parking garage of type I or II construction, unless a 1-hour separation is required to separate control areas in accordance with Table 2703.1.1(1).

604.2.14.1.1 Fuel supply. An on-premises fuel supply, sufficient for not less than 2-hour full-demand operation of the system, shall be provided.
((~~**Exception:** When *approved*, the system shall be allowed to be supplied by natural gas pipelines.~~))

604.2.14.1.2 Capacity. The ((~~standby~~))emergency system shall have a capacity and rating that supplies all equipment required to be operational at the same time. The generating capacity is not required to be sized to operate all of the connected electrical equipment simultaneously.

604.2.14.1.3 Emergency Power Loads. The following are classified as emergency power loads: ((~~**Connected facilities.** Power and lighting facilities for the *fire command center* and elevators specified in Sections 403.9 and 403.10 of the *International Building Code*, as applicable, shall be transferable to the standby source. Standby power shall be provided for at least one elevator to serve all floors and be transferable to any elevator.~~))
1. Exit signs and means of egress illumination required by Chapter 10.
2. Elevator car lighting.
3. Emergency voice/alarm communications systems.
4. Automatic fire detection systems.
5. Fire alarm systems.
6. Power and lighting for the fire command center.
7. Lighting for mechanical rooms.
8. Electrically powered fire pumps.
9. Ventilation and automatic fire detection equipment for pressurized stairways.
10. Smoke control systems.
11. A selected elevator in each bank in accordance with *Seattle Building Code* Section 3016.7. A bank of elevators is a group of elevators or a single elevator controlled by a common operating system—all elevators that respond to a single call button constitute a bank of elevators. All elevators shall be transferable to emergency power.

((~~**604.2.14.2 Separate circuits and luminaires.** Separate lighting circuits and luminaires shall be required to provide sufficient light with an intensity of not less than 1 foot-candle (11 lux) measured at floor level in all *means of egress corridors*, *stairways*, smokeproof enclosures, elevator cars and lobbies, and other areas that are clearly a part of the escape route.~~

~~**604.2.14.2.1 Other circuits.** Circuits supplying lighting for the *fire command center* and mechanical equipment rooms shall be transferable to the standby source.~~

~~**604.2.14.3 Emergency systems.** *Exit* signs, *exit* illumination as required by Chapter 10, electrically powered fire pumps required to maintain pressure, and elevator car lighting are classified as~~
~~emergency systems and shall operate within 10 seconds of failure of the normal power supply and shall be capable of being transferred to the standby source.~~
~~**Exception:** *Exit* sign, *exit* and *means of egress* illumination are permitted to be powered by a standby source in buildings of Group F and S occupancies.~~))

604.2.15 Underground buildings. Emergency and legally required standby power systems in underground buildings covered in Chapter 4 of the *International Building Code* shall comply with Sections 604.2.15.1((~~ and 604.2.15.2~~)).

604.2.15.1 ((~~Standby~~)) Emergency power. An ((~~standby~~)) emergency power system complying with this section and NFPA 70 shall be provided for ((~~standby~~)) emergency power loads as specified in Section 604.2.15.1.1.

[B] 604.2.15.1.1 ((~~Standby~~)) Emergency power loads. The following loads are classified as ((~~standby~~)) emergency power loads:
1. Smoke control system.
2. **Ventilation and automatic fire detection equipment for ((~~smokeproof enclosures~~))pressurized stairways**.
3. Fire pumps.
4. ((~~Standby~~))Emergency power shall be provided for elevators in accordance with Section 3003 of the *International Building Code* and escalators in accordance with NFPA 130.
5. Emergency voice/alarm communication systems.
6. Fire alarm systems.
7. Automatic fire detection systems.
8. Elevator car lighting.
9. Means of egress lighting and exit sign illumination as required by Chapter 10.

~~((**[B] 604.2.15.1.2 Pickup time.** The standby power system shall pick up its connected loads within 60 seconds of failure of the normal power supply.~~

~~**604.2.15.2 Emergency power.** An emergency power system complying with this code and NFPA 70 shall be provided for emergency power loads as specified in Section 604.2.15.2.1.~~

~~**604.2.15.2.1 Emergency power loads.** The following loads are classified as emergency power loads:~~
~~1. Emergency voice/alarm communication systems.~~
~~2. Fire alarm systems.~~
~~3. Automatic fire detection systems.~~
~~4. Elevator car lighting.~~
~~5. *Means of egress* lighting and *exit* sign illumination as required by Chapter 10.~~))

***

604.2.17 Airport traffic control towers. A legally required standby power system shall be provided in airport traffic control towers more than 65 feet (19 812 mm) in height. Power shall be provided to the following equipment:
1. Pressurization equipment, mechanical equipment and lighting.

2. Elevator operating equipment.
3. Fire alarm and smoke detection systems.

604.2.18 Elevators. In buildings and structures where ((~~standby~~)) emergency power is required or furnished to operate an elevator, the operation shall be in accordance with Sections 604.2.18.1 through 604.2.18.4 and *Seattle Building Code*, Section 3016.6.

604.2.18.1 Manual transfer. ((~~Standby~~)) Emergency power shall be manually transferable to all elevators in each bank.

604.2.18.2 One elevator. Where only one elevator is installed, the elevator shall automatically transfer to ((~~standby~~)) emergency power within 60 seconds after failure of normal power.

604.2.18.3 Two or more elevators. Where two or more elevators are controlled by a common operating system, all elevators shall automatically transfer to ((~~standby~~))emergency power within 60 seconds after failure of normal power where the ((~~standby~~))emergency power source is of sufficient capacity to operate all elevators at the same time. Where the ((~~standby~~)) emergency power source is not of sufficient capacity to operate all elevators at the same time, all elevators shall transfer to ((~~standby~~))emergency power in sequence, return to the designated landing and disconnect from the ((~~standby~~))emergency power source. After all elevators have been returned to the designated level, at least one elevator shall remain operable from the ((~~standby~~))emergency power source.

604.2.18.4 Venting. Where ((~~standby~~))emergency power is connected to elevators, the machine room ventilation or air conditioning shall be connected to the ((~~standby~~))emergency power source.

604.2.19 Refrigeration systems. If treatment, detection, continuous ventilation, or alarm systems are required for refrigeration systems, such systems shall be connected to a legally-required standby source of power to supply electrical power in the event of loss from the primary source.

604.3 Maintenance. Emergency and *legally required standby power* systems shall be maintained in accordance with NFPA 110 and NFPA 111 such that the system is capable of supplying service within the time specified for the type and duration required.

604.3.1 Schedule. Inspection, testing and maintenance of emergency and *legally required standby power* systems shall be in accordance with an *approved* schedule established upon completion and approval of the system installation.

604.3.2 Written record. Written records of the inspection, testing and maintenance of emergency and *legally required standby power* systems shall include the date of service, name of the servicing technician, a summary of conditions noted and a detailed description of any conditions requiring correction and what corrective action was taken. Such records shall be kept on the premises served by the emergency or *legally required standby power* system and ((~~be available for inspection by~~))shall be submitted to the *fire code official* in accordance with Administrative Rule 9.02.09, *Confidence Test Requirements for Life Safety Systems* and any future revisions of this rule adopted by the *fire code official*.

604.3.3 Switch maintenance. Emergency and *legally required standby power* system transfer switches shall be included in the inspection, testing and maintenance schedule required by Section 604.3.1. Transfer switches shall be maintained free from accumulated dust and dirt. Inspection shall include examination of the transfer switch contacts for evidence of deterioration. When evidence of contact deterioration is detected, the contacts shall be replaced in accordance with the transfer switch manufacturer's instructions.

604.4 Operational inspection and testing. Emergency power systems, including all appurtenant components shall be inspected and tested under load in accordance with NFPA 110 and NFPA 111.

> **Exception:** Where the emergency power system is used for *legally required standby power* or peak load shaving, such use shall be recorded and shall be allowed to be substituted for scheduled testing of the generator set, provided that appropriate records are maintained.

***

606.8 Refrigerant detector. Refrigeration machinery rooms required by the *Seattle Mechanical Code* shall contain a refrigerant detector with an audible and visual alarm. The detector, or a sampling tube that draws air to the detector, shall be located in an area where refrigerant from a leak will concentrate. The alarm shall be actuated at a value not greater than the corresponding TLV-TWA values shown in the ((~~*International*~~))*Seattle Mechanical Code* for the refrigerant classification. Detectors and alarms shall be placed in *approved* locations. The detector shall transmit a signal to an approved location.

The system shall also comply with the mechanical ventilation requirements for emergency conditions in accordance with *Seattle Mechanical Code* Section 1105.6.4.

***

606.12.5 Flaring systems. Flaring systems for incineration of flammable refrigerants shall be designed to incinerate the entire discharge. The products of refrigerant incineration shall not pose health or environmental hazards. Incineration shall be automatic upon initiation of discharge, shall be designed to prevent blowback and shall not expose structures or materials to threat of fire. Standby fuel, such as LP gas, and *legally required standby power* shall have the capacity to

operate for one and one-half the required time for complete incineration of refrigerant in the system.

***

606.17 Standby source of power required. When treatment, detection, continuous ventilation or alarm systems are required, such systems shall be connected to a legally-required standby source of power to supply electrical power in the event of loss of power from the primary source. See Section 604.2 and the *Seattle Electrical Code* Article 701.

SECTION 607
ELEVATOR RECALL AND MAINTENANCE

607.1 Emergency operation. Existing elevators with a travel distance of 25 feet (7620 mm) or more shall comply with the requirements in Chapter 46. New elevators shall be provided with Phase I emergency recall operation and Phase II emergency in-car operation in accordance with ASME A17.1.

Phase I recall shall be initiated on any activation of the building's fire alarm system.

***

608.1 Scope. Stationary storage battery systems having an electrolyte capacity of more than 50 gallons (189 L) for flooded lead-acid, nickel cadmium and VRLA, or 1,000 pounds (454 kg) for lithium-ion and lithium metal polymer, used for facility *legally required standby power*, emergency power or uninterrupted power supplies shall comply with this section and Table 608.1.

***

[W] [M] 609.2 Where required. A Type I hood shall be installed at or above all commercial cooking appliances and domestic cooking appliances used for commercial purposes that produce grease vapors.
Exception: A Type I hood is not required to be installed in R-2 occupancies licensed by the State of Washington.

[W] 609.3 Operations and maintenance. Commercial cooking systems shall be operated and maintained in accordance with Sections 609.3.1 through 609.3.4 and Chapter 11 of NFPA 96.

***

Section 9. Chapter 8 of the 2009 International Fire Code is amended as follows:

***

801.1 Scope. The provisions of this chapter shall govern interior finish, interior trim, furniture, furnishings, decorative materials and decorative vegetation in buildings. Existing buildings shall

comply with Sections 803 through 808. New buildings shall comply with Sections 804 through 808 of this code and Section 803 of the *International Building Code*.

***

[W] 806.1.1 Restricted occupancies. Natural cut trees shall be prohibited in Group ((~~A, E,~~)) I-1, I-2, I-3, I-4, ((~~M, R-1,~~)) and R-2 ((~~and R-4~~))occupancies((~~.~~)) providing licensed care to clients in one of the categories listed in Section 310.1 of the *International Building Code* regulated by either the Washington Department of Health or the Department of Social and Health Services.

((~~**Exceptions:**~~
~~1. Trees located in areas protected by an approved automatic sprinkler system installed in accordance with Section 903.3.1.1 or 903.3.1.2 shall not be prohibited in Groups A, E, M, R-1 and R-2.~~
~~2. Trees shall be allowed within dwelling units in Group R-2 occupancies.~~))

[W] 806.1.2 Support devices. The support device that holds the tree in an upright position shall be of a type that is stable and that meets all of the following criteria:
1. The device shall hold the tree securely and be of adequate size to avoid tipping over of the tree.
2. The device shall be capable of containing a minimum ((~~two-day~~)) supply of water in accordance with Table 806.1.2.
3. The water level, when full, shall cover the tree stem at least 2 inches (51 mm). The water level shall be maintained above the fresh cut and checked at least once daily.

[W] TABLE 806.1.2
SUPPORT STAND WATER CAPACITY

TREE STEM DIAMETER (inches)	MINIMUM SUPPORT STAND WATER CAPACITY (gallons)	TYPICAL DAILY WATER EVAPORATION AMOUNT (gallons)
Up to 4	1	1/4 to 1
4 to 6	1 1/2	1 1/4 to 1 1/2
7 to 8	2	1 3/4 to 2
9 to 12	3	2 1/4 to 3
13 and over	4	Over 3

806.1.3 Dryness. The tree shall be removed from the building whenever the needles or leaves fall off readily when a tree branch is shaken or if the needles are brittle and break when bent between the thumb and index finger or whenever determined necessary by the *fire code official*. The tree shall be checked daily for dryness.

***

807.2 Acceptance criteria and reports. Where required to be flame resistant, decorative materials shall be tested by an *approved* agency and meet the flame propagation performance criteria of NFPA 701 or other *approved* standard, or such materials shall be noncombustible. Reports of test results shall be prepared in accordance with NFPA701 and furnished to the *fire code official* upon request.

807.2 Point of Information

Acceptable flame certificates for decorative materials include:
1. Certificates indicating compliance with NFPA 701.
2. Certificates verifying approval through the California State Fire Marshal.
3. Certificates indicating compliance with CPAI-84 (*Canvas Products Association International*).

***

SECTION 809
DECORATIVE MATERIALS USED
IN TEMPORARY ASSEMBLY OCCUPANCIES

809.1 General. Combustible decorative materials used in temporary assembly occupancies shall be flame resistant as determined by the *fire code official*.

Exceptions:
1. The display of salable goods.
2. Educational materials and product brochures that are stored, distributed and maintained in an approved manner.
3. Live vegetation of an *approved* type.

***

Section 10. Chapter 9 of the 2009 International Fire Code is amended as follows:

***

901.4.5 Certification. Individuals who install, inspect, test or maintain *fire protection systems* shall obtain the proper certificate from the *fire code official* in accordance with Administrative Rule 9.01.09, *Certification for Installing, Maintaining and Testing Life Safety Systems and Equipment* and any future revisions of this rule adopted by the fire code official.

Exception: Individuals who install, inspect, test, or maintain single and multiple station smoke alarms.

***

901.5.1 Occupancy. It shall be unlawful to occupy any portion of a building or structure until the systems required ((~~fire detection, alarm and suppression systems~~))by this chapter have been tested and *approved*. For additional details see Administrative Rule 9.07.07, *Partial / Phased Occupancy, Occupancy during Construction and Temporary Certificates of Occupancy* and any future revisions of this rule adopted by the *fire code official.*

901.6 Inspection, testing and maintenance. Fire detection((~~, alarm and extinguishing systems~~)) and alarm systems, fire-extinguishing systems, fire hydrant systems, fire standpipe systems, fire pump systems, private fire service mains and all other *fire protection systems* and appurtenances thereto shall be maintained in an operative condition at all times, and shall be replaced or repaired where defective. Nonrequired *fire protection systems* and equipment shall be inspected, tested and maintained or, when approved by the *fire code official*, removed.

901.6.1 Confidence Test: All *Fire protection systems*, including nonrequired systems, shall be confidence tested in accordance with the Administrative Rule 9.02.09 *Confidence Test Requirements for Life Safety Systems* and any future revisions of this rule adopted by the *fire code official*.

Exceptions:

1. NFPA 13D sprinkler systems
2. Single and multiple station smoke alarms
3. Fire hydrants and fire service mains

901.6.2((~~1~~)) Standards. *Fire protection systems* shall be inspected, tested and maintained in accordance with the referenced standards *listed* in Table 901.6.2((~~1~~)).

901.6.3((~~2~~)) Records. Records of all system inspections, tests and maintenance required by the referenced standards shall be maintained on the premises for a minimum of three years and shall be copied to the *fire code official* upon request. Confidence test documentation shall be submitted to the fire code official in accordance with Administrative Rule 9.02.09, *Confidence Test Requirements for Life Safety Systems* and any future revisions of this rule adopted by the *fire code official.*

901.6.3((~~2~~)).1 Records information. Initial records shall include the name of the installation contractor, type of components installed, manufacturer of the components, location and number of components installed per floor. Records shall also include the manufacturers' operation and maintenance instruction manuals. Such records shall be maintained on the premises.

901.7 Systems out of service. Where a ((~~required~~))*fire protection system* is out of service, the procedures detailed in Administrative Rule 9.06.07, *Out-Of-Service Fire and Life Safety Systems* and any future revisions of this rule adopted by the *fire code official* shall be implemented. ((~~the fire department and the *fire code official* shall be notified immediately and, where required by the *fire code official*, the building shall either be evacuated or an *approved* fire watch shall be provided for all occupants left unprotected by the shutdown until the *fire protection system* has been returned to service.~~

~~Where utilized, fire watches shall be provided with at least one *approved* means for notification of the fire department and their only duty shall be to perform constant patrols of the protected premises and keep watch for fires.~~))

***

901.10 Cabinets. Cabinets containing fire-fighting equipment, such as standpipes, fire hose, fire extinguishers or fire department valves, shall not be blocked from use or obscured from view.

901.10.1 Cabinet equipment identification. Cabinets shall be identified in an *approved* manner by a permanently attached sign with letters not less than 2 inches (51 mm) high in a color that contrasts with the background color, indicating the equipment contained therein.

Exceptions:

1. Doors not large enough to accommodate a written sign shall be marked with a permanently attached pictogram of the equipment contained therein.
2. Doors that have either an *approved* visual identification clear glass panel or a complete glass door panel.

901.10.2 Locking cabinet doors. Cabinets shall be unlocked.

Exceptions:

1. Visual identification panels of glass or other *approved* transparent frangible material that is easily broken and allows access.
2. *Approved* locking arrangements.
3. Group I-3 occupancies.

***

902.1 Definitions. The following words and terms shall, for the purposes of this chapter and as used elsewhere in this code, have the meanings shown herein.

***

FIRE DETECTION SYSTEM. A system of smoke or heat detectors monitored at an approved central station, with no requirement for notification appliances in the building.

***

HIGH-RISE BUILDING. Buildings having occupied floors located more than 75 feet (22 860 mm) above the lowest level of fire department vehicle access.

***

PORTABLE SCHOOL CLASSROOM. A structure, transportable in one or more sections, that requires a chassis to be transported, and that is designed to be used as an educational space with or without a permanent foundation. The structure shall be trailerable and capable of being demounted and relocated to other locations as needs arise.

***

903.2.1.2 Group A-2. An *automatic sprinkler system* shall be provided for Group A-2 occupancies where one of the following conditions exists:

1. The *fire area* exceeds 5,000 square feet (464m2).
2. The *fire area* has an *occupant load* of 100 or more.
3. The *fire area* is located on a floor other than a *level of exit discharge* serving such occupancies.

Exception: Item 3 above does not apply to fire areas that include space located one floor above the level of exit discharge if the occupant load of the upper floor is less than 50.

***

903.2.1.6 Nightclub. An automatic sprinkler system shall be provided throughout *nightclubs*. Any space to be constructed for, used for, or converted to, occupancy as a *nightclub* shall provide an automatic sprinkler system as required by this section.

***

903.2.3 Group E. An *automatic sprinkler system* shall be provided for Group E occupancies. ((~~as follows:~~

~~1. Throughout all Group E *fire areas* greater than 12,000 square feet (1115 m2) in area.~~

~~2. Throughout every portion of educational buildings below the lowest *level of exit discharge*~~ **serving** ~~that portion of the building.~~

~~**Exception:** An *automatic sprinkler system* is not required in any area below the lowest *level of exit discharge* serving that area where every classroom throughout the building has at least one exterior *exit* door at ground level.~~))

Exceptions:

1. Portable school classrooms, if the aggregate area of any cluster of portable school classrooms does not exceed 5,000 square feet (1465 m2); and clusters of portable school classrooms shall be separated as required in Chapter 5 of the *Seattle Building Code*.
2. Group E occupancies with an occupant load of 50 or less.

***

903.2.7 Group M. An *automatic sprinkler system* shall be provided throughout buildings containing a Group M occupancy where one of the following conditions exists:

1. A Group M *fire area* exceeds 12,000 square feet (1115 m2).
2. A Group M *fire area* is located more than three stories above grade plane.
3. The combined area of all Group M *fire areas* on all floors, including any mezzanines, exceeds 24,000 square feet (2230 m2).
4. A Group M occupancy that is used for the display and sale of mattresses and upholstered furniture and the display area exceeds 5,000 square feet (464 m^2).

***

903.2.8 Group R. An *automatic sprinkler system* installed in accordance with Section 903.3 shall be provided throughout all buildings with a Group R *fire area*.

Exception: Buildings complying with the *Seattle Residential Code* and Chapter 5 of this code are not required to be sprinklered.

***

903.2.9.3 Liquor Warehouses. An automatic sprinkler system shall be installed in liquor warehouses.

903.2.9.3 Point of Information

Stockrooms of retail liquor sales outlets are not liquor warehouses.

***

903.2.11.7 Basement storage and sale of combustible materials. An automatic sprinkler system shall be installed throughout basements that are not stories above grade plane that are used for storage or sale of combustible materials.

Exceptions:
1. Sprinklers are not required in portions of the basement not containing combustible materials and protected by a fire barrier with at least a one-hour fire-resistance rating.

2. Sprinklers are not required in storage rooms meeting the following criteria:

2.1. The area of the room does not exceed 500 square feet (46.5 m2);

2.2. The room is protected by a fire barrier with at least a one-hour fire-resistance rating;

2.3. The room contains no material classified as a flammable liquid, hazardous material or highly combustible material;

2.4. The room is served by exterior fire access or interior access by a one-hour fire-resistance rated corridor;

2.5. No more than three such rooms are permitted in any one basement.

903.2.11.8 Covered boat moorage. Automatic sprinklers shall be provided for covered boat moorage exceeding 500 square feet (46.5m^2) in projected roof area per pier, wharf or float. The sprinkler system shall be designed and installed in accordance with NFPA 13 for Extra Hazard Group 2 occupancy. If sprinklers are required by this section for covered moorage, any other structure exceeding 500 square feet (46.5 m^2) in projected roof area on the pier, wharf or float is also required to be sprinklered.

***

903.3.1 Standards. Sprinkler systems shall be designed and installed in accordance with Sections 903.3.1.1 unless otherwise permitted by Sections((~~,~~)) 903.3.1.2 or 903.3.1.3.

903.3.1.1 NFPA 13 sprinkler systems. Where the provisions of this code require that a building or portion thereof be equipped throughout with an *automatic sprinkler system* in accordance with this section, sprinklers shall be installed throughout in accordance with NFPA 13 except as provided in Section 903.3.1.1.1 and Administrative Rule 9.03.09, *Automatic Sprinkler and Standpipe Systems*, and any future revisions of this rule adopted by the *fire code official*.

903.3.1.1.1 Exempt locations. Automatic sprinklers shall not be required in the following rooms or areas where such rooms or areas are protected with an *approved* automatic fire detection system in accordance with Section 907.2 that will respond to visible or invisible particles of combustion. Sprinklers shall not be omitted from any room merely because it is damp, of fire-resistance rated construction or contains electrical equipment.

1. Any room where the application of water, or flame and water, constitutes a serious life or fire hazard, if *approved* by the *fire code official*.
2. Any room or space where sprinklers are considered undesirable because of the nature of the contents, when *approved* by the *fire code official*.
3. ((~~Generator and t~~)) Transformer vaults((~~rooms~~)) separated from the remainder of the building by walls and floor/ceiling or roof/ceiling assemblies having a *fire-resistance rating* of not less than 3((~~2~~)) hours.

4. Rooms or areas that are of noncombustible construction with wholly noncombustible contents.
5. Fire service access elevator machine rooms and machinery spaces.

903.3.1.1.2 High-rise building sprinkler system design. In high-rise buildings, combination standpipe/sprinkler risers using 6 inch pipe minimum shall be used with the sprinkler system connected between standpipe risers. Shut-off valves, water-flow devices and check valves (or pressure reducing valves) shall be provided on each floor at the sprinkler system connection to each standpipe. Two four-way fire department connections serving the combination system shall be provided on separate streets well separated from each other. At least one of the fire department connections shall be connected to the riser above a riser isolation valve. Also see section 905.3.6.

When a mid-level fire pump is required by NFPA 14 two pumps with the same rating shall be installed.

Dry-pipe sprinkler systems serving parking garages may use a single supply and one separate two-way fire department connection. The dry-pipe sprinkler system shall be supplied by the on-site water tank.

903.3.1.2 NFPA 13R sprinkler systems. ((~~Where allowed in buildings of Group R, up to and including four stories in height, *a*)~~)*Automatic sprinkler systems* in Group R occupancies up to and including four stories in height ((~~shall~~))may be installed throughout in accordance with NFPA 13R and Administrative Rule 9.03.09, *Automatic Sprinkler and Standpipe Systems* and any future revisions of this rule adopted by the *fire code official*. NFPA 13R sprinkler systems are not allowed in mixed use residential buildings unless the only other occupancy is parking associated with the residential use or the non-residential use is separated in accordance with the *Seattle Building Code* to create a separate building.

***

903.3.1.3 NFPA 13D sprinkler systems. ((~~Where allowed, *a*~~))*Automatic sprinkler systems* ((~~installed~~)) in one and two-family *dwellings* and if approved by the *fire code official*, *townhouses*, ((~~shall~~))may be installed throughout in accordance with NFPA 13D and Administrative Rule 9.03.09 *Automatic Sprinkler and Standpipe Systems* and any future revisions of this rule adopted by the *fire code official*.

***

903.3.3 Obstructed locations. Automatic sprinklers shall be installed in accordance with NFPA 13 obstruction criteria and the listing requirements of the sprinkler head.((~~with due regard to obstructions that will delay activation or obstruct the water distribution pattern.~~)) Automatic sprinklers shall be installed in or under covered kiosks, displays, booths, concession stands or equipment that exceeds 4 feet (1219 mm) in width and depth. Not less than a 3-foot (914 mm)

clearance shall be maintained between automatic sprinklers and the top of piles of *combustible fibers*.

Exception: Kitchen equipment under exhaust hoods protected with a fire-extinguishing system in accordance with Section 904.

903.3.4 Actuation. *Automatic sprinkler systems* shall be automatically actuated unless specifically provided for in this code.

Exception: Elevator machine rooms and machinery spaces in accordance with Administrative Rule 9.08.05, *Sprinkler Systems and Fire Alarms for Elevator Machinery Rooms*, *Hoist Ways and Pits* and any future revisions of this rule adopted by the *fire code official.*

***

903.3.5.1 Domestic services. Both NFPA 13R and NFPA 13D sprinkler systems can be supplied by a domestic service((~~Where the domestic service can provides the water supply for the *automatic sprinkler system*, the supply shall be~~)) in accordance with this section.

***

903.3.5.2((~~1 Residential c~~))Combination fire/domestic services. A single combination water supply shall be allowed for all types of sprinkler systems ((~~provided that~~))if the domestic demand is added to the sprinkler demand. ((~~as required by NFPA 13R.~~))

903.3.5.3 Fire Service A fire service shall be allowed for all types of sprinkler systems.

903.3.5.4((~~2~~)) Secondary water supply. A secondary on-site water supply providing the lesser of a net volume of 33,000 gallons or an amount equal to the hydraulically calculated sprinkler demand, including the hose stream requirement in NFPA 13, shall be provided for all high-rise buildings((~~in Seismic Design Category C, D, E or F as determined by the *International Building Code*~~)). The secondary water supply shall have a duration of not less than 30 minutes as determined by the occupancy hazard classification in accordance with NFPA 13.

Exception: Existing buildings, including those undergoing a substantial renovation.

***

903.4 Sprinkler system supervision and alarms. All valves controlling the water supply for *automatic sprinkler systems*, pumps, tanks, water levels and temperatures, critical air pressures and water-flow switches on all sprinkler systems shall be electrically supervised by a *listed* fire alarm control unit.

Exceptions:

1. *Automatic sprinkler systems* protecting one- and two family *dwellings* and, if *approved* by the *fire code official*, *townhouses*.
2. Limited area systems serving fewer than 20 sprinklers.

3. *Automatic sprinkler systems* installed in accordance with NFPA 13R where a common supply main is used to supply both domestic water and the *automatic sprinkler system*, and a separate shutoff valve for the *automatic sprinkler system* is not provided.
4. Jockey pump control valves that are sealed or locked in the open position.
5. Control valves to commercial kitchen hoods, paint spray booths or dip tanks that are sealed or locked in the open position.
6. Valves controlling the fuel supply to fire pump engines that are sealed or locked in the open position.
7. Trim valves to pressure switches in dry, preaction and deluge sprinkler systems that are sealed or locked in the open position.

903.4.1 Monitoring. Alarm, supervisory and trouble signals shall be distinctly different and shall be automatically transmitted to a central station service that is listed in the current edition of the Underwriters Laboratories FIRE PROTECTION EQUIPMENT DIRECTORY under the category Central Station (UUFX) as a Full Service Company or as a Monitoring Company.

Fire alarm systems in high-rise buildings and Group I and Group A occupancies (other than A-5) shall be monitored by a central station service that is listed in the current edition of the Underwriters Laboratories FIRE PROTECTION EQUIPMENT DIRECTORY under the category Central Station (UUFX) as a Full Service Company or as a Fire Alarm Service–Local Company that subcontracts the monitoring, retransmission and associated record keeping and reporting to a listed Full Service Company or Monitoring Company. The listing shall indicate that the Full Service Company or Fire Alarm Service – Local Company provides service to the Seattle area. ((~~an approved central station, remote supervising station or proprietary supervising station as defined in NFPA 72 or, when approved by the fire code official, shall sound an audible signal at a constantly attended location.~~))

Exceptions:

1. Underground key or hub valves in roadway boxes or any valve in underground vaults provided by the municipality or public utility are not required to be monitored.
2. Backflow prevention device test valves located in limited area sprinkler system supply piping shall be locked in the open position. In occupancies required to be equipped with a fire alarm system, the backflow preventer valves shall be electrically supervised by a tamper switch installed in accordance with NFPA 72 and separately annunciated.

***

903.4.3 Floor control valves. *Approved* supervised indicating control valves shall be provided at the point of connection to the riser on each floor in high-rise buildings, and at the point of connection to the riser on any combination sprinkler/standpipe riser in any building.

***

903.6.3 Nightclub. Existing *nightclubs* shall be provided with an automatic sprinkler system as required by Section 4603.4.3.

***

905.2 Installation standard. Standpipe systems shall be installed in accordance with this section and NFPA 14, and Administrative Rule 9.03.09, *Automatic Sprinklers and Standpipes* and any future revisions of this rule adopted by the *fire code official*.

905.3 Required installations. Standpipe systems shall be installed where required by Sections 905.3.1 through 905.3.7 and in the locations indicated in Sections 905.4, 905.5 and 905.6. Standpipe systems are allowed to be combined with *automatic sprinkler systems*.

Exception: Standpipe systems are not required in Group R-3 occupancies and townhouses.

***

((~~**905.3.2 Group A**. Class I automatic wet or manual standpipes shall be provided in nonsprinklered Group A buildings having an occupant load exceeding 1,000 persons.))~~
~~**Exceptions:**~~
~~1. Open-air-seating spaces without enclosed spaces.~~
~~2. Class I automatic dry and semiautomatic dry standpipes or manual wet standpipes are allowed in buildings where the highest floor surface used for human occupancy is 75 feet (22 860 mm) or less above the lowest level of fire department vehicle access.~~))

905.3.2((~~3~~)) Covered mall buildings. A covered mall building shall be equipped throughout with a Class I standpipe system with ((~~standpipe system where required by Section 905.3.1. Covered mall buildings not required to be equipped with a standpipe system by Section 905.3.1 shall be equipped with Class I hose connections connected to the *automatic sprinkler system* sized to deliver water at 250 gallons per minute (946.4 L/min) at the most hydraulically remote hose connection while concurrently supplying the *automatic sprinkler system* demand. The standpipe system shall be designed not to exceed a 50-pounds-per-square-inch (345 kPa) residual pressure loss with a flow of 250 gallons per minute (946.4 L/min) from the fire department connection to the hydraulically most remote hose connection. H~~))hose connections ((~~shall be~~)) provided at each of the following locations:

1. Within the mall at the entrance to each *exit* passageway or *corridor*.
2. At each floor-level landing within enclosed *stairways* opening directly on the mall.
3. At exterior public entrances to the mall.
4. At other locations as necessary so that the distance to reach all portions of a tenant space does not exceed 200 feet (60 960 mm) from a hose connection.

~~((**905.3.4 Stages.** Stages greater than 1,000 square feet (93 m2) in area shall be equipped with a Class III wet standpipe system with 11/2-inch and 21/2-inch (38 mm and 64 mm) hose connections on each side of the stage.~~

~~**Exception:** Where the building or area is equipped throughout with an *automatic sprinkler system*, a 11/2 inch (38 mm) hose connection shall be installed in accordance with NFPA 13 or in accordance with NFPA 14 for Class II or III standpipes.~~

~~**905.3.4.1 Hose and cabinet.** The 11/2-inch (38 mm) hose connections shall be equipped with sufficient lengths of 11/2-inch (38 mm) hose to provide fire protection for the stage area. Hose connections shall be equipped with an *approved* adjustable fog nozzle and be mounted in a cabinet or on a rack.~~))

905.3.3((~~5~~)) Underground buildings. Underground buildings shall be equipped throughout with a Class I automatic wet or manual wet standpipe system.

905.3.4((~~6~~)) Helistops and heliports. Buildings with a helistop or heliport that are equipped with a standpipe shall extend the standpipe to the roof level on which the helistop or heliport is located in accordance with Section 1107.5.

905.3.5((~~7~~)) Marinas and boatyards. Standpipes in marinas and boatyards shall be installed in accordance ((~~comply~~)) with Chapter 45.

905.3.6 High-rise building standpipes. Standpipe risers in high-rise buildings shall be combination standpipe/sprinkler risers using a minimum pipe size of 6 inches (152 mm). Two 21/2-inch (64 mm) hose connections shall be provided on every floor level landing in every required stairway. If pressure reduction valves (prv) are required, each hose connection shall be provided with its own prv. The system shall be designed to provide a minimum flow of 300 gpm (19 L/s) at a minimum pressure of 150 psi (1034 kPa) [maximum 205 psi (1379 kPa)] at each standpipe connection, in addition to the flow and pressure requirements contained in NFPA 14. Also see section 903.3.1.1.2

905.4 Location of Class I standpipe hose connections. Class I standpipe hose connections shall be provided in all of the following locations:

1. In every required *stairway*, a hose connection shall be provided for each floor level above or below grade. Hose connections shall be located at an intermediate floor level landing between floors, or the main floor landing, but must be consistent throughout a building. ((~~unless otherwise *approved* by the *fire code official*.~~))

2. On each side of the wall adjacent to the *exit* opening of a horizontal *exit*.

Exception: Where floor areas adjacent to a horizontal *exit* are reachable from *exit stairway* hose connections by a 30-foot (9144 mm) hose stream from a nozzle attached to 100 feet (30 480 mm) of hose, a hose connection shall not be required at the horizontal *exit*.

3. In every *exit* passageway, at the entrance from the exit passageway to other areas of a building.

Exception: Where floor areas adjacent to an exit passageway are reachable from *exit stairway* hose connections by a 30-foot (9144 mm) hose stream from a nozzle attached to 100 feet (30 480 mm) of hose, a hose connection shall not be required at the entrance from the exit passageway to other areas of the building.

4. In covered mall buildings, adjacent to each exterior public entrance to the mall, ((~~and~~)) adjacent to each entrance from an *exit* passageway or *exit corridor* to the mall, at each floor-level landing within enclosed *stairways* opening directly on the mall, and at other locations as necessary so that the distance to reach all portions of a tenant space does not exceed 200 feet (60 960 mm) from a hose connection.

5. Where the roof has a slope less than four units vertical in 12 units horizontal (33.3-percent slope), ((~~each~~)) at least one standpipe shall be provided with a hose connection located either on the roof or at the highest landing of a *stairway* with stair access to the roof. ((~~An a~~)) Additional hose connections shall be provided so that all portions of the roof are within 200 feet of hose travel distance from a standpipe hose connection. ((~~at the top of the most hydraulically remote standpipe for testing purposes.~~)) The hose connection(s) shall be at least 10 feet (3048 mm) from the roof edge, skylight, light well or other opening, unless protected by a 42-inch-high (1067 mm) guardrail or equivalent.

6. Where the most remote portion of a nonsprinklered floor or story is more than 150 feet (45 720 mm) of hose travel distance from a hose connection or the most remote portion of a sprinklered floor or story is more than 200 feet (60 960 mm) of hose travel distance from a hose connection, additional hose connections shall be provided that are accessed through protected enclosures. The protected enclosure shall be a corridor constructed as a smoke barrier from the exit enclosure to the standpipe connection. Additional hose connections in parking garages are not required to be accessed through or located in protected enclosures. ((~~the *fire code official* is authorized to require that additional hose connections be provided in *approved* locations.~~))

***

((~~**905.5.1 Groups A-1 and A-2.** In Group A-1 and A-2 occupancies with *occupant loads* of more than 1,000, hose connections shall be located on each side of any stage, on each side of the rear of the auditorium, on each side of the balcony, and on each tier of dressing rooms.~~))

905.5.1 ((~~2~~)) Protection. Fire-resistance-rated protection of risers and laterals of Class II standpipe systems is not required.

905.5.2 ((~~3~~)) Class II system 1-inch hose. A minimum 1-inch (25 mm) hose shall be allowed to be used for hose stations in light-hazard occupancies where investigated and *listed* for this service and where *approved* by the *fire code official*.

***

((~~**905.7 Cabinets.** Cabinets containing fire-fighting equipment, such as standpipes, fire hose, fire extinguishers or fire department valves, shall not be blocked from use or obscured from view.~~

~~**905.7.1 Cabinet equipment identification.** Cabinets shall be identified in an *approved* manner by a permanently attached sign with letters not less than 2 inches (51 mm) high in a color that contrasts with the background color, indicating the equipment contained therein.~~

~~**Exceptions:**~~

~~1. Doors not large enough to accommodate a written sign shall be marked with a permanently attached pictogram of the equipment contained therein.~~
~~2. Doors that have either an *approved* visual identification clear glass panel or a complete glass door panel are not required to be marked.~~

~~**905.7.2 Locking cabinet doors.** Cabinets shall be unlocked.~~

~~**Exceptions:**~~
~~1. Visual identification panels of glass or other *approved* transparent frangible material that is easily broken and allows access.~~
~~2. *Approved* locking arrangements.~~
~~3. Group I-3 occupancies.~~))

905.7 ((~~8~~)) Dry standpipes. Dry standpipes shall not be installed.

Exception: Where subject to freezing and in accordance with NFPA 14.

905.8 ((~~9~~)) Valve supervision. Valves controlling water supplies shall be supervised in the open position so that a change in the normal position of the valve will generate a supervisory signal at the supervising station required by Section 903.4. Where a fire alarm system is provided, a signal shall also be transmitted to the control unit.

Exceptions:

1. Valves ((~~to underground key or hub valves in roadway boxes~~)) provided by the municipality or public utility do not require supervision.
2. Valves locked in the normal position and inspected as provided in this code in buildings not equipped with a fire alarm system and/or not provided with monitoring by a central station service.

905.9 ((~~10~~)) During construction. Standpipe systems required during construction and demolition operations shall be provided in accordance with Section 1413.

905.10 ((~~11~~)) Existing buildings. Where required in Chapter 46, existing structures shall be equipped with standpipes installed in accordance with Section 905.

SECTION 906
PORTABLE FIRE EXTINGUISHERS

906.1 Where required. Portable fire extinguishers shall be installed in the following locations.

1. In new and existing Group A, B, E, F, H, I, M, R-1, R-2, ((~~R-4~~))and S occupancies. ((~~**Exception:** In new and existing Group A, B and E occupancies equipped throughout with quick response sprinklers, portable fire extinguishers shall be required only in locations specified in Items 2 through 6.~~))

2. Within 30 feet (9144 mm) of commercial cooking equipment.
3. In areas where flammable or *combustible liquids* are stored, used or dispensed.
4. On each floor of structures under construction, except Group R-3 occupancies, in accordance with Section 1415.1.
5. Where required by the sections indicated in Table 906.1.
6. Special-hazard areas, including but not limited to laboratories, computer rooms and generator rooms, where required by the *fire code official*.

906.2 General requirements. Portable fire extinguishers shall be selected, installed and maintained in accordance with this section and NFPA 10 by individuals who possess the proper certificate from the fire code official in accordance with Administrative Rule 9.01.09 *Certification for Installing, Maintaining and Testing Life Safety Systems and Equipment* and any future revisions of this rule adopted by the *fire code official*.

Exceptions:

1. The travel distance to reach an extinguisher shall not apply to the spectator seating portions of Group A-5 occupancies.
2. Thirty-day inspections shall not be required and maintenance shall be allowed to be once every three years for dry-chemical or halogenated agent portable fire extinguishers that are supervised by a *listed* and *approved* electronic monitoring device, provided that all of the following conditions are met:
   - 2.1. Electronic monitoring shall confirm that extinguishers are properly positioned, properly charged and unobstructed.
   - 2.2. Loss of power or circuit continuity to the electronic monitoring device shall initiate a trouble signal.
   - 2.3. The extinguishers shall be installed inside of a building or cabinet in a noncorrosive environment.

2.4. Electronic monitoring devices and supervisory circuits shall be tested every three years when extinguisher maintenance is performed.

2.5. A written log of required hydrostatic test dates for extinguishers shall be maintained by the *owner* to verify that hydrostatic tests are conducted at the frequency required by NFPA 10.

3. In Group I-3, portable fire extinguishers shall be permitted to be located at staff locations.

***

SECTION 907
FIRE ALARM AND DETECTION SYSTEMS

907.1 General. This section covers the application, installation, performance and maintenance of fire alarm systems and their components in new and existing buildings and structures
The requirements of Section 907.2 are applicable to new buildings and structures. The requirements of Section 907.3 are applicable to existing buildings and structures. All fire alarm and fire detection systems shall be designed, installed and maintained in accordance with the requirements of NFPA 72, except for the locations of initiating devices which shall comply with Section 907 of the *Seattle Fire Code.* For the purposes of-this section, fire walls not located on a property line shall not constitute a separate building.

Buildings required by this section to be provided with a fire alarm system shall be provided with a single fire alarm system.

Exception: A single system is not required in existing buildings that are being increased in size and the existing fire alarm system is unable to expand into the new space. In those cases multiple systems shall be arranged as described below for nonrequired fire alarm systems.

Buildings not required by this section to be provided with a fire alarm system may be provided with multiple partial fire alarm systems if:
1. The systems are connected so that all systems simultaneously activate alarm notification appliances upon a signal from any of the fire alarm systems in the building, and
2. The location of each system's annunciator panel (or main panel) is also provided with annunciator panels with reset capability for every other system in the building.

***

907.2.2 Group B. A manual fire alarm system that activates the occupant notification system in accordance with Section 907.6 shall be installed in Group B occupancies where one of the following conditions exists:

1. The combined Group B *occupant load* of all floors is 500 or more.

2. The Group B *occupant load* is more than 100 *persons* above or below the lowest *level of exit discharge*.
3. The Group B *fire area* contains a Group B ambulatory health care facility.

Exception: Manual fire alarm boxes are not required where the building is equipped throughout with an *automatic sprinkler system* installed in accordance with Section 903.3.1.1 and the occupant notification appliances will activate throughout the notification zones upon sprinkler water flow.

***

((**~~907.2.7.1 Occupant notification.~~** ~~During times that the building is occupied, the initiation of a signal from a manual fire alarm box or from a water flow switch shall not be required to activate the alarm notification appliances when an alarm signal is activated at a constantly attended location from which evacuation instructions shall be initiated over an emergency voice/alarm communication system installed in accordance with Section 907.6.2.2.~~))

[W] 907.2.8 Group R-1. Fire alarm systems ((~~and~~)), smoke alarms, and carbon monoxide alarms shall be installed in Group R-1 occupancies as required in Sections 907.2.8.1 through 907.2.8.((~~3~~))4.

907.2.8.1 Manual fire alarm system. A manual fire alarm system that activates the occupant notification system in accordance with Section 907.6 shall be installed in Group R-1 occupancies.

Exception((~~s~~)):

((~~1.~~))A manual fire alarm system is not required in buildings not more than two stories in height where all individual *sleeping units* and contiguous attic and crawl spaces to those units are separated from each other and public or common areas by at least 1-hour *fire partitions* and each individual *sleeping unit* has an *exit* directly to a *public way*, *exit court* or yard.

((~~2. Manual fire alarm boxes are not required throughout the building when the following conditions are met:~~

~~2.1. The building is equipped throughout with an *automatic sprinkler system* installed in accordance with Section 903.3.1.1 or 903.3.1.2;~~

~~2.2. The notification appliances will activate upon sprinkler water flow; and~~

~~2.3. At least one manual fire alarm box is installed at an *approved* location.~~))

907.2.8.2 Automatic ((~~smoke~~)) detection system. An automatic smoke detection system that activates the occupant notification system in accordance with Section 907.6 shall be installed throughout all interior *corridors* serving *sleeping units*. Automatic heat detectors shall be provided in any unsprinklered interior areas outside guestrooms other than attics and crawl spaces.

Exception: An automatic smoke detection system is not required in buildings that do not have interior *corridors* serving *sleeping units* and where each *sleeping unit* has a *means of egress* door opening directly to an *exit* or to an exterior *exit access* that leads directly to an *exit*.

907.2.8.3 Smoke alarms. Single- and multiple-station smoke alarms shall be installed in accordance with Section 907.2.11.

907.2.8.4 Carbon monoxide alarms. For new construction, an approved carbon monoxide alarm shall be installed by January 1, 2011, outside of each separate sleeping area in the immediate vicinity of the bedroom in dwelling and sleeping units. For studio type units that do not have a bedroom or a sleeping area separate from the unit itself, the carbon monoxide alarm shall be placed inside the sleeping or dwelling unit in the vicinity of the sleeping area. In a building where a tenancy exists, the tenant shall maintain the CO alarm as specified by the manufacturer including replacement of the batteries.

[W] 907.2.8.4.1 Existing sleeping units. Existing sleeping units shall be equipped with carbon monoxide alarms by July 1, 2011.

907.2.8.4.2 Alarm requirements. Single station carbon monoxide alarms listed as complying with UL 2034 shall be installed in accordance with NFPA 720, *Standard for the Installation of Carbon Monoxide (CO) Detection and Warning Equipment* and the manufacturer's installation instructions.

907.2.9 Group R-2. Fire alarm systems, ((~~and~~))smoke alarms, automatic heat detection systems, and carbon monoxide alarms shall be installed in Group R-2 occupancies as required in Section 907.2.9.1 ((~~and~~)) through 907.2.9.((~~2~~))4.

907.2.9.1 Manual fire alarm system. A manual fire alarm system that activates the occupant notification system in accordance with Section 907.6 shall be installed in Group R-2 occupancies where:

1. Any *dwelling unit* or *sleeping unit* is located three or more stories above the lowest *level of exit discharge*;
2. Any *dwelling unit* or *sleeping unit* is located more than one story below the highest *level of exit discharge* of *exit*s serving the *dwelling unit* or *sleeping unit*; or
3. The building contains more than 16 *dwelling units* or *sleeping units*.

[W] 4. The building contains a boarding home licensed by the state of Washington.

Exceptions:

1. A fire alarm system is not required in buildings not more than two stories in height where all *dwelling units* or *sleeping units* and contiguous attic and crawl spaces are separated from each

other and public or common areas by at least 1-hour *fire partitions* and each *dwelling unit* or *sleeping unit* has an *exit* directly to a *public way*, *exit court* or yard.

2. A fire alarm system is not required in townhouses if approved by the *fire code official*. ((~~Manual fire alarm boxes are not required where the building is equipped throughout with an *automatic sprinkler system* installed in accordance with Section 903.3.1.1 or 903.3.1.2 and the occupant notification appliances will automatically activate throughout the notification zones upon a sprinkler water flow.~~))

3. A fire alarm system is not required in buildings that do not have interior *corridors* serving *dwelling units* and are protected by an *approved automatic sprinkler system* installed in accordance with Section 903.3.1.1 or 903.3.1.2, provided that *dwelling units* either have a *means of egress* door opening directly to an exterior *exit access* that leads directly to the *exits* or are served by open-ended *corridors* designed in accordance with Section 1026.6, Exception 4.

[W] 4. In boarding homes licensed by the state of Washington, manual fire alarm boxes in resident sleeping areas are not required at exits if located at all constantly attended staff locations, if such staff locations are visible, continuously accessible, located on each floor, and positioned so no portion of the story exceeds a horizontal travel distance of 200 feet to a manual fire alarm box.

907.2.9.2 Smoke alarms. Single- and multiple-station smoke alarms shall be installed in accordance with Section 907.2.11.

907.2.9.3 Automatic heat detection. An automatic heat detection system that activates the occupant notification system in accordance with Section 907.6 shall be installed throughout all unsprinklered interior areas outside dwelling units other than attics and crawl spaces.

[W] 907.2.9.4 Carbon monoxide alarms. For new construction, an approved carbon monoxide alarm shall be installed by January 1, 2011, outside of each separate sleeping area in the immediate vicinity of the bedroom in dwelling and sleeping units. For studio type units that do not have a bedroom or a sleeping area separate from the unit itself, the carbon monoxide alarm shall be placed inside the sleeping or dwelling unit in the vicinity of the sleeping area. In a building where a tenancy exists, the tenant shall maintain the CO alarm as specified by the manufacturer including replacement of the batteries.

[W] 907.2.9.4.1 Existing dwelling units. Existing dwelling units shall be equipped with carbon monoxide alarms by July 1, 2011.

[W] 907.2.10 Group R-3. Carbon monoxide alarms shall be installed in Group R-3 occupancies as required in Sections 907.2.10.1 through 907.2.10.3.

[W] 907.2.l0.1 Carbon monoxide alarms. For new construction, an approved carbon monoxide alarm shall be installed by January 1, 2011, outside of each separate sleeping area in

the immediate vicinity of the bedroom in dwelling units. In a building where a tenancy exists, the tenant shall maintain the CO alarm as specified by the manufacturer including replacement of the batteries.

[W] 907.2.10.2 Existing dwelling units. Existing dwelling units shall be equipped with carbon monoxide alarms by July 1, 2011. Exception: Owner-occupied Group R-3 residences legally occupied prior to July 1, 2010.

907.2.10.3 Alarm requirements. Single station carbon monoxide alarms listed as complying with UL 2034 shall be installed in accordance with NFPA 720, *Standard for the Installation of Carbon Monoxide (CO) Detection and Warning Equipment* and the manufacturer's installation instructions.

((~~R-4.~~ ~~Fire alarm systems and smoke alarms shall be installed in Group R-4 occupancies as required in Sections 907.2.10.1 through 907.2.10.3.~~

~~**907.2.10.1 Manual fire alarm system.** A manual fire alarm system that activates the occupant notification system in accordance with Section 907.6 shall be installed in Group R-4 occupancies.~~

~~**Exceptions:**~~

~~1. A manual fire alarm system is not required in buildings not more than two stories in height where all individual *sleeping units* and contiguous attic and crawl spaces to those units are separated from each other and public or common areas by at least 1-hour *fire partitions* and each individual *sleeping unit* has an *exit* directly to a *public way*, *exit court* or yard.~~

~~2. Manual fire alarm boxes are not required throughout the building when the following conditions are met:~~

~~2.1. The building is equipped throughout with an *automatic sprinkler system* installed in accordance with Section 903.3.1.1 or 903.3.1.2;~~

~~2.2. The notification appliances will activate upon sprinkler water flow; and~~

~~2.3. At least one manual fire alarm box is installed at an *approved* location.~~

~~3. Manual fire alarm boxes in resident or patient sleeping areas shall not be required at *exits* where located at all nurses' control stations or other constantly attended staff locations, provided such stations are visible and continuously accessible and that travel distances required in Section 907.5.2.1 are not exceeded.~~

~~**907.2.10.2 Automatic smoke detection system.** An automatic smoke detection system that activates the occupant notification system in accordance with Section 907.6 shall be installed in *corridors*, waiting areas open to *corridors* and *habitable spaces* other than *sleeping units* and kitchens.~~

~~**Exceptions:**~~

~~1. Smoke detection in *habitable spaces* is not required where the facility is equipped throughout with an *automatic sprinkler system* installed in accordance with Section 903.3.1.1.~~

~~2. An automatic smoke detection system is not required in buildings that do not have interior *corridors* serving *sleeping units* and where each *sleeping unit* has a *means of egress* door opening directly to an *exit* or to an exterior *exit access* that leads directly to an exit.~~

~~**907.2.10.3 Smoke alarms.** Single- and multiple-station smoke alarms shall be installed in accordance with Section 907.2.11.~~))

***

907.2.11.2 Groups R-2, R-3, ((~~R-4~~)) and I-1. Single or multiple-station smoke alarms shall be installed and maintained in Groups R-2, R-3,((~~R-4~~)) and I-1 regardless of *occupant load* at all of the following locations:

1. On the ceiling or wall outside of each separate sleeping area in the immediate vicinity of bedrooms.
2. In each room used for sleeping purposes.

Exception: Single- or multiple-station smoke alarms in Group I-1 shall not be required where smoke detectors are provided in the sleeping rooms as part of an automatic smoke detection system.

3. In each story within a *dwelling unit*, including *basements* but not including crawl spaces and uninhabitable attics. In *dwellings* or *dwelling units* with split levels and without an intervening door between the adjacent levels, a smoke alarm installed on the upper level shall suffice for the adjacent lower level provided that the lower level is less than one full story below the upper level.

907.2.11.3 Interconnection. Where more than one smoke alarm is required to be installed within an individual *dwelling unit* or *sleeping unit* in Group R-1, R-2((~~,~~)) or R-3((~~ or R-4~~)), the smoke alarms shall be interconnected in such a manner that the activation of one alarm will activate all of the alarms in the individual unit. The alarm shall be clearly audible in all bedrooms over background noise levels with all intervening doors closed.

***

907.2.13 High-rise buildings. Buildings with a floor used for human occupancy located more than 75 feet (22 860 mm) above the lowest level of fire department vehicle access shall be provided with an automatic smoke detection system in accordance with Section 907.2.13.1, a fire department communication system in accordance with Section 907.2.13.2 and an emergency voice/alarm communication system in accordance with Section 907.6.2.2.

Exceptions:

1. Airport traffic control towers in accordance with Section 907.2.22 and Section 412 of the *International Building Code*.
2. Open parking garages in accordance with Section 406.3 of the *International Building Code*.
3. Buildings with an occupancy in Group A-5 in accordance with Section 303.1 of the *International Building Code*.
4. Low-hazard special occupancies in accordance with Section 503.1.1 of the *International Building Code.*
((~~5. Buildings with an occupancy in Group H-1, H-2 or H-3 in accordance with Section 415 of the *International Building Code*.~~))
5.((~~6.~~)) In Group I-1 and I-2 occupancies, the alarm shall sound at a constantly attended location and general occupant notification shall be broadcast by the emergency voice/alarm communication system.

907.2.13.1 Automatic smoke detection. Automatic smoke detection in high-rise buildings shall be in accordance with Sections 907.2.13.1.1 and 907.2.13.1.2.

907.2.13.1.1 Area smoke detection. Area smoke detectors shall be provided in accordance with this section. Smoke detectors shall be connected to an automatic fire alarm system. The activation of any detector, other than duct smoke detectors, required by this section shall operate the emergency voice/alarm communication system in accordance with Section 907.6.2.2. Smoke detectors shall be located as follows:

1. In each mechanical equipment, electrical, transformer, telephone equipment or similar room which is not provided with sprinkler protection.
2. In each elevator machine room and in elevator lobbies.
3. Within 5 feet (1524 mm) of doors exiting into stairways that are smokeproof enclosures, or that are pressurized stairways.
Exception: If such locations are within parking garages, smoke detectors are not required.

907.2.13.1.2 Duct smoke detection. Duct smoke detectors complying with Section 907.4.1 shall be located as follows:

1. In the main return air and exhaust air plenum of each air-conditioning system having a capacity greater than 2,000 cubic feet per minute (cfm) (0.94 m3/s). Such detectors shall be located in a serviceable area downstream of the last duct inlet.
2. At each connection to a vertical duct or riser serving two or more stories from a return air duct or plenum of an air-conditioning system. In Group R-1 and R-2 occupancies, a smoke detector is allowed to be used in each return air riser carrying not more than 5,000 cfm (2.4 m3/s) and serving not more than 10 air-inlet openings.

3. Two smoke detectors are required for stair and elevator shaft pressurization air intakes arranged to automatically shut down the pressurization fans only when both detectors activate. The detectors shall be located downstream of each fan and shall be connected to the fire alarm as a supervisory signal.

907.2.13.2 Fire department communication system. Where a wired communication system is *approved* in lieu of a radio coverage system in accordance with Section 510, the wired fire department communication system shall be designed and installed in accordance with NFPA 72 and shall operate between a *fire command center* complying with Section 508, elevators, elevator lobbies, emergency and standby power rooms, fire pump rooms, areas of refuge and inside enclosed *exit stairways*. The fire department communication device shall be provided at each floor level within the enclosed *exit stairway*. Eight portable handsets for the communication system shall be provided in the *fire command center*.

***

907.2.18.1 Smoke detectors. A minimum of one smoke detector *listed* for the intended purpose shall be installed in the following areas:

1. Mechanical equipment, electrical, transformer, telephone equipment, elevator machine or similar rooms.
2. Elevator lobbies.
3. The main return and exhaust air plenum of each air-conditioning system serving more than one story and located in a serviceable area downstream of the last duct inlet.
4. Each connection to a vertical duct or riser serving two or more floors from return air ducts or plenums of heating, ventilating and air-conditioning systems, except that in Group R occupancies, a *listed* smoke detector is allowed to be used in each return air riser carrying not more than 5,000 cfm (2.4 m3/s) and serving not more than 10 air inlet openings.
5. Within 5 feet (1524 mm) of doors exiting into staiways that are smokeproof enclosures, or that are pressurized stairways.
Exception: If such locations are within parking garages, smoke detectors are not required.
6. Two smoke detectors are required for stair and elevator shaft pressurization air intakes, arranged to automatically shut down the pressurization fans only when both detectors activate. The detectors shall be located downstream of each fan and shall be connected to the fire alarm as a supervisory signal.

***

907.4.1 Duct smoke detectors. Smoke detectors installed in ducts shall be *listed* for the air velocity, temperature and humidity present in the duct. Duct smoke detectors shall be connected to the building's fire alarm control unit when a fire alarm system is required by Section 907.2. Activation of a duct smoke detector shall initiate a visible and audible supervisory signal at a

constantly attended location and shall perform the intended fire safety function in accordance with this code and the *International Mechanical Code*. Duct smoke detectors shall not be used as a substitute for required open area detection and shall not activate the occupant notification system.

Exceptions:

1. The supervisory signal at a constantly attended location is not required where duct smoke detectors activate the building's alarm notification appliances.
2. In occupancies not required to be equipped with a fire alarm system, actuation of a smoke detector shall activate a visible and an audible signal in an *approved* location. Smoke detector trouble conditions shall activate a visible or audible signal in an *approved* location and shall be identified as air duct detector trouble.

***

907.4.3 Elevator emergency operation. Automatic fire detectors installed for elevator emergency operation shall be installed in accordance with the provisions of ((~~ASME A17.1 and NFPA 72.~~)) Administrative Rule 9.08.05, *Sprinkler Systems and Fire Alarms for Elevator Machinery Rooms, Hoist Ways and Pits* and any future revisions of this rule adopted by the *fire code official.*

***

907.6 Occupant notification systems. A fire alarm system shall annunciate at the panel and shall initiate occupant notification upon activation, in accordance with Sections 907.6.1 through 907.6.2.3.4. Where a fire alarm system is required by another section of this code, it shall be activated by:

1. Automatic fire detectors, other than duct smoke detectors and smoke alarms located inside dwelling units and sleeping units.
2. Sprinkler waterflow devices.
3. Manual fire alarm boxes.
4. Automatic fire-extinguishing systems.

Exception: Where notification systems are allowed elsewhere in Section 907 to annunciate at a constantly attended location.

***

907.6.2.1.1 Average sound pressure. The audible alarm notification appliances shall provide a sound pressure level of 15 decibels (dBA) above the average ambient sound level or 5 dBA above the maximum sound level having a duration of at least 60 seconds, whichever is greater, in every occupiable space within the building, or in the case of a partial alarm system, throughout the space that is being provided with the fire alarm system. The minimum sound pressure levels shall be: 75 dBA in occupancies in Groups R and I-1; 90 dBA in mechanical equipment rooms; and 60 dBA in other occupancies. In assembly occupancies with high sound levels such as nightclubs and bars, an interface shall be provided between the fire alarm system and the noise source to eliminate the noise source upon activation of the fire alarm system.

Exceptions:
1. Private mode signaling in accordance with NFPA 72 is allowed in areas of Group I-2 and I -3 occupancies if occupants are not expected to self evacuate.
2. Audibility is not required for fire detection systems monitored by an approved central station in buildings not required by this section to be provided with a fire alarm system.

***

907.6.2.2 Emergency voice/alarm communication systems. Emergency voice/alarm communication systems required by this code shall be designed and installed in accordance with NFPA 72. The operation of any automatic fire detector, sprinkler waterflow device or manual fire alarm box shall automatically sound an alert tone followed by voice instructions giving *approved* information and directions for a general or staged evacuation in accordance with the building's fire safety and evacuation plans required by Section 404. In high-rise buildings, the system shall operate on a minimum of the alarming floor, the floor above and ((~~the~~)) two floors below. For purposes of this section a floor is defined as all floors interconnected by open stairwells, escalators or atriums without approved automatic opening protectives in accordance with Section 715 of the *Seattle Building Code*. Speakers shall be provided throughout the building by paging zones. At a minimum, paging zones shall be provided as follows:

1. Elevator groups.
2. Each ((~~E~~))e*xit stairway((~~s~~))*.
3. Each floor.
4. *Areas of refuge* as defined in Section 1002.1.

Exception: In Group I-1 and I-2 occupancies, the alarm shall sound in a constantly attended area and a general occupant notification shall be broadcast over the overhead page.

***

907.6.2.3 Visible alarms. Visible alarm notification appliances shall be provided in accordance with Sections 907.6.2.3.1 through 907.6.2.3.4, and Administrative Rule 9.09.07, *Visible Alarm Notification Devices* and any future revisions of this rule adopted by the *fire code official*.

Exceptions:
1. Visible alarm notification appliances are not required in *alterations*, except where an existing fire alarm system is upgraded or replaced, or a new fire alarm system is installed.

907.6.2.3 Point of Information

See Administrative Rule 9.09.07, *Visible Alarm Notification Devices* and any future revisions of this rule adopted by the *fire code official* for clarification of terms upgraded and replaced.

2. Visible alarm notification appliances shall not be required in *exits* as defined in Section 1002.1.
3. Visible alarm notification appliances shall not be required in elevator cars.

***

907.7.3.1 ((~~Zoning indicator~~)) Annunciator panel. ((~~A zoning indicator panel and the associated controls shall be provided in an *approved* location.~~)) All fire alarm systems in buildings without a fire command center shall be provided with an annunciator panel (or the main fire alarm control panel) located inside the building at the main building entrance. The visual zone indication on the annunciator panel shall lock in until the system is reset and shall not be canceled by the operation of an audible alarm-silencing switch.

***

907.7.5 Monitoring. Fire alarm systems required by this chapter or by the *International Building Code* shall be monitored by an *approved* supervising station in accordance with NFPA 72.

Exception: Monitoring by a supervising station is not required for:

1. Single- and multiple-station smoke alarms required by Section 907.2.11.
2. Smoke detectors in Group I-3 occupancies.
3. *Automatic sprinkler systems* in one- and two-family dwellings and *townhouses*.

***

907.8 Acceptance tests and completion. Upon completion of the installation, and after the electrical inspector has signed-off the installation, the fire alarm system and all fire alarm components shall be tested in accordance with NFPA 72, in the presence of the *fire code official*, by individuals who possess the proper certificate from the *fire code official* in accordance with Administrative Rule 9.01.09 *Certification for Installing Maintaining, and Testing Life Safety Systems and Equipment* and any future revisions of this rule adopted by the *fire code official*.

907.8.1 Single- and multiple-station alarm devices. When the installation of the alarm devices is complete, each device and interconnecting wiring for multiple-station alarm devices shall be tested in accordance with the smoke alarm provisions of NFPA 72.

***

907.10 Resetting fire alarm equipment. Fire alarm equipment shall be reset upon activation only by fire department personnel.

Exception: If approved by the *fire code official*.

***

909.11 Power systems. The smoke control system shall be supplied with two sources of power. Primary power shall be from the normal building power systems. Secondary power shall be from an *approved* emergency ((~~standby~~)) source complying with Section 604 and NFPA70. The emergency ((~~standby~~)) power source and its transfer switches shall be in a room separate from the normal power transformers and switch gears and ventilated directly to and from the exterior. The room shall be enclosed with not less than 1-hour *fire barriers* constructed in accordance with Section 707 of the *International Building Code* or horizontal assemblies constructed in accordance with Section 712 of the *International Building Code*, or both.

Exception: A generator set with a diesel fuel tank system exceeding 660 gallons is not required to be located in a rated room if installed in a sprinklered parking garage of type I or II construction, unless a 1-hour separation is required to separate control areas in accordance with Table 2703.1.1(3).

***

909.11.2 Wiring. In addition to meeting requirements of the *Seattle Electrical Code*, all wiring regardless of voltage, shall have fire-resistance-rated protection of at least two hours or as required in rules promulgated by the building official.

Exception: Subject to the approval of the building official, fire-resistance rating is not required for wiring located in a parking garage.

***

909.12.1 Wiring. See section 909.11.2. **((**~~In addition to meeting requirements of NFPA 70, all wiring, regardless of voltage, shall be fully enclosed within continuous raceways.~~))

***

909.16 Fire-fighter's smoke control panel. A fire-fighter's smoke control panel for fire department emergency response purposes only shall be provided and shall include manual control or override of automatic control for mechanical smoke control systems. The panel shall be located in a *fire command center* complying with Section 508 in high-rise buildings or buildings with smoke-protected assembly seating. In all other buildings, the fire-fighter's smoke control panel shall be installed in an *approved* location adjacent to the fire alarm control panel. The fire-fighter's smoke control panel shall comply with Sections 909.16.1 through 909.16.3. The smoke control panel for high rise buildings shall include a visual depiction of the building showing typical floor plan(s) with locations of exit enclosures and elevator shafts. The panel shall also include section views of the building to show the extent of travel for each exit

enclosure and elevator. Exit enclosures and elevator shafts shall be labeled on the plan section views to match the labeling used in the building itself.

909.16.1 Smoke control systems. Fans within the building shall be shown on the fire-fighter's control panel. Fan control switches shall be located on the panel in the vicinity of the location where the shaft supplied by each fan is depicted. A clear indication of the direction of airflow and the relationship of components shall be displayed. Status indicators shall be provided for all smoke control fans, ((~~equipment,~~))annunciated by fan and zone and by pilot-lamp-type indicators as follows:

1. Fans in a ready/non-operating status ((~~, dampers and other operating equipment in their normal status~~))—WHITE.
2. Fans ((~~, dampers and other operating equipment~~)) in their off or closed status—RED.
3. Fans in operation ((~~, dampers and other operating equipment in their on or open status~~))—GREEN.
4. Fans ((~~, dampers and other operating equipment in a fault status~~)) in a fault condition —YELLOW/AMBER.

909.16.2 Smoke control panel. The fire-fighter's control panel shall provide control capability over the complete smoke-control system equipment within the building as follows:

1. ON-AUTO-OFF control over each shaft pressurization fan. ((~~individual piece of operating smoke control equipment that can also be controlled from other sources within the building. This includes *stairway* pressurization fans; smoke exhaust fans; supply, return and exhaust fans; elevator shaft fans; and other operating equipment used or intended for smoke control purposes.~~))

2. AUTO-OFF-POSITIVE PRESSURE-NEGATIVE PRESSURE control of each smoke control zone designed with such features. Individual control of each damper and fan used to achieve the positive or negative pressure condition is not required. ((~~OPEN-AUTO-CLOSE control over individual dampers relating to smoke control and that are also controlled from other sources within the building.~~))

3. AUTO-EXHAUST-OFF control of each smoke exhaust zone using the exhaust method of smoke control.((~~ON-OFF or OPEN-CLOSE control over smoke control and other critical equipment associated with a fire or smoke emergency and that can only be controlled from the fire-fighter's control panel.~~))

Exception((**s**))**:**
1. Complex exhaust systems using multiple exhaust fans and/or zones may require individual fan control if required by the *fire code official*.((~~Complex systems, where *approved*, where the~~

~~controls and indicators are combined to control and indicate all elements of a single smoke zone as a unit.~~
~~2. Complex systems, where *approved*, where the control is accomplished by computer interface using *approved*, plain English commands.~~))

***

909.18.8 Special inspections for smoke control. Smoke control systems shall be tested by a special inspector for compliance with the *approved* plans.

909.18.8.1 Scope of testing. Special inspections shall be conducted in accordance with the following:
((~~1. During erection of ductwork and prior to concealment for the purposes of leakage testing and recording of device location.~~))
1((~~2~~)). Prior to occupancy and after sufficient completion for the purposes of pressure-difference testing, flow measurements, and detection and control verification.

***

[B] 909.21 Smokeproof enclosures. Where required by Section 1022.9, a smokeproof enclosure shall be constructed in accordance with Sections 909.10 through 909.21. A smokeproof enclosure shall consist of an enclosed interior *exit stairway* that conforms to Section 1022.1 and is pressurized according to the requirements of this section. Where access to the roof is required by this code, such access shall be from the smokeproof enclosure where a smokeproof enclosure is required.

[B] 909.21.1 Stairway pressurization *Exit stairways* shall be pressurized to a minimum of 0.10 inches of water (25 Pa) and a maximum of 0.35 inches of water (87 Pa) in the shaft relative to the building measured with all *stairway* doors closed under maximum anticipated conditions of stack effect and wind effect. The pressure differential shall be measured between the exit enclosure and the adjacent area. In residential buildings, the pressure differential is permitted to be measured between the exit enclosure and the dwelling units.

Exception: The pressure differential is permitted to be measured relative to outdoor atmosphere on floors other than the following:
1. the fire floor,
2. the two floors immediately below the fire floor, and
3. the floor immediately above the fire floor.

[B] 909.21.1.1 Supply Air. Air for stairway pressurization shall be supplied at intervals sufficient to maintain the required pressure throughout the exit enclosure.

Note: The performance goal for Section 909.21.1.1 is compliance with minimum and maximum

pressures at all levels of the shaft, and to ensure upward flow of air and smoke.

[B] 909.21.1.2 Supply air. Supply air shall be taken directly from an outside, uncontaminated source at least 20 feet (6096 mm) from any air exhaust system or outlet. The supply air intake shall be located at the exterior of the building. The intake shall be continuous to the exterior of the building. The fan system shall be equipped with two smoke detectors located in the duct in accordance with NFPA 72 arranged to automatically shut down the fan system only when both smoke detectors activate. The detectors shall be located downstream of the fan and shall be connected to the fire alarm as a supervisory signal.

[B] 909.21.1.3 Dampered relief opening. The exit enclosure shall be equipped with a relief opening at the top. The relief opening shall be equipped with a barometric relief damper and a motorized damper that complies with the *Washington State Energy Code with Seattle Amendments*. The motorized damper shall be of the normally open type (open with the power off). Activation of the damper shall be initiated by the building fire alarm system and by actuation of the automatic sprinkler system.
The pressurization system shall be capable of maintaining the differential pressure required by Section 909.21.1 while discharging 2,500 cubic feet per minute (1180 L/s) of air through the relief opening. The relief outlet shall be located at least 20 feet from elevator hoistway and stairway pressurization system supply air intake locations.

[B] 909.21.2 Pressurization equipment. The pressurization equipment required by Section 909.21.1 shall be activated by a fire alarm signal origination anywhere in the building. Smoke detectors shall be installed in accordance with Section 907.3.

[B] 909.21.2.1 Pressurization systems. Stairway pressurization systems shall be independent of other building ventilation systems.

> **Exception:** Ventilation systems other than exit enclosure supply air systems are permitted to be used to exhaust air from adjacent space when necessary to maintain the differential pressure relationships. Ventilation systems used to achieve stairway pressurization are not required to comply with Section 909.

The equipment, control wiring, power wiring and ductwork shall comply with one of the following:

1. Equipment, control wiring, power wiring and ductwork shall be located exterior to the building and directly connected to the exit enclosure or connected to the exit enclosure by ductwork enclosed by *fire barriers* constructed in accordance with Section 707 or *horizontal assemblies* constructed in accordance with Section 712 of the *Seattle Building Code*, or both, with a fire-resistance rating not less than that required for the exit enclosure.

2. Equipment, control wiring, power wiring and ductwork shall be located within the exit enclosure with intake or exhaust directly from and to the outside or through ductwork enclosed by *fire barriers* constructed in accordance with Section 707 or *horizontal assemblies* constructed in accordance with Section 712 of the *Seattle Building Code*, or both, with a fire-resistance rating not less than that required for the exit enclosure.

3. Equipment, control wiring, power wiring and ductwork shall be located within the building if separated from the remainder of the building, including other mechanical equipment, by *fire barriers* constructed in accordance with Section 707 or *horizontal assemblies* constructed in accordance with Section 712 of the *Seattle Building Code*, or both, with a fire-resistance rating not less than that required for the exit enclosure.

Exceptions:

1. Control wiring and power wiring utilizing a 2-hour rated cable or cable system.
2. Where encased with not less than 2 inches (51 mm) of concrete.

DPD Interpretation I909.21: Dampers other than motorized dampers required by the *Washington State Energy Code with Seattle Amendments* are not permitted in stairway pressurization system air supply unless approved by the building official.

[B] 909.21.2.2 Emergency power systems. Stairway pressurization systems and automatic fire detection systems shall be powered by an *approved* emergency power system conforming to Section 403.4.8 and Chapter 27 of the *Seattle Building Code*.

[B] 909.21.2.3 Rational analysis. A rational analysis complying with Section 909.4 shall be submitted with the construction documents.

[B] 909.21.2.4 Special inspection and acceptance testing. Special inspection and acceptance testing shall comply with Section 909.18 and 909.19.

[B] 909.22 Pressurization for low-rise buildings. Where stairway pressurization is provided in accordance with Section 1021.2.1 item 3 or with Section 509.2 item 11 of the *Seattle Building Code*, the pressurization system shall comply with the following:

1. Stairways shall be pressurized to a minimum positive pressure of 0.15 inch of water column (37 Pa) relative to the main occupied area on each floor, and a maximum pressure that complies with Section 1008.1.3;
2. The stairway pressurization shall be activated by a fire alarm originating anywhere in the building. Smoke detectors shall be installed within 5 feet (1524 mm) of doors exiting into pressurized stairways;
3. Pressurization equipment and its duct work located within the building shall be separated from other portions of the building by construction equal to that required for the exit enclosure;

4. Supply air shall be taken directly from an outside, uncontaminated source at least 20 feet (6096 mm) from any air exhaust system or outlet. Air ducts shall be continuous to the exterior of the building. Two smoke detectors shall be located in the duct in accordance with NFPA 72 arranged to automatically shut down the fan system only when both smoke detectors activate. The detectors shall be located downstream of the fan and shall be connected to the fire alarm as a supervisory signal;
5. A *legally required standby* power system shall be provided for the pressurization system according to *Seattle Electrical Code* Section 701.11. A connection ahead of the service disconnecting means shall be permitted as the sole source of power to the pressurization system.
6. Other measures to prevent loss of pressurization shall be provided in the design and construction of exit enclosures, such as doors and door closers, quality of workmanship, and caulking of penetrations and joints.
7. A rational analysis complying with Section 909.4 is not required for stairway pressurization systems in low-rise buildings.
8. Special inspection and acceptance testing shall comply with Section 909.18 and 909.19.

***

914.3 High-rise buildings. High-rise buildings shall comply with Sections 914.3.1 through 914.3.5. See sections 903.3.1.1.2 and 905.3.6 for additional requirements.

***

((~~**914.3.1.1 Number of sprinkler risers and system design.** Each sprinkler system zone in buildings that are more than 420 feet (128 m) in height shall be supplied by a minimum of two risers. Each riser shall supply sprinklers on alternate floors. If more than two risers are provided for a zone, sprinklers on adjacent floors shall not be supplied from the same riser.~~

~~**914.3.1.1.1 Riser location.** Sprinkler risers shall be placed in stair enclosures which are remotely located in accordance with Section 1015.2.~~

~~**914.3.1.2 Water supply to required fire pumps.** Required fire pumps shall be supplied by connections to a minimum of two water mains located in different streets. Separate supply piping shall be provided between each connection to the water main and the pumps. Each connection and the supply piping between the connection and the pumps shall be sized to supply the flow and pressure required for the pumps to operate.~~
~~**Exception:** Two connections to the same main shall be permitted provided the main is valved such that an interruption can be isolated so that the water supply will continue without interruption through at least one of the connections.~~))

***

914.3.5 ((~~Fire department communication system.~~ ~~A two-way fire department communication system shall be provided for fire department use in accordance with Section~~

~~907.2.13.2.~~))**Emergency responder radio coverage.** Emergency responder radio coverage shall be provided in accordance with Section 510.

***

914.4.1 Automatic sprinkler system. An *approved automatic sprinkler system* shall be installed throughout the entire building.

Exceptions:

1. That area of a building adjacent to or above the atrium need not be sprinklered, provided that portion of the building is separated from the atrium portion by not less than a 2-hour *fire barrier* constructed in accordance with Section 707 of the *International Building Code* or *horizontal assemblies* constructed in accordance with Section 712 of the *International Building Code*, or both.
2. Where the ceiling of the atrium is more than 55 feet (16 764 mm) above any floor open to the atrium ((~~the floor~~)), sprinkler protection at the ceiling of the atrium is not required.

***

SECTION 915
ALERTING SYSTEMS

915.1 General. An approved *alerting system* in accordance with Sections 915.2 through 915.6 shall be provided in all Group E occupancies.

Exception: Approved *alerting systems* in existing buildings, structures or occupancies.

[W] 915.2 Power source. *Alerting systems* shall be provided with power supplies in accordance with Section 4.4.1 of NFPA 72 and circuit disconnecting means identified as "EMERGENCY ALERTING SYSTEM."

Exception: Systems that do not require electrical power to operate.

[W] 915.3 Duration of operation. The *alerting system* shall be capable of operating under nonalarm condition (quiescent load) for a minimum of 24 hours and then shall be capable of operating during an emergency condition for a period of 15 minutes at maximum connected load.

[W] 915.4 Combination system. *Alerting system* components and equipment shall be allowed to be used for other purposes.

[W] 915.4.1 System priority. The *alerting system* use shall take precedence over any other use.

[W] 915.4.2 Fire alarm system. Fire alarm systems sharing components and equipment with *alerting systems* shall be in accordance with Section 6.8.4 of NFPA 72.

[W] 915.4.2.1 Signal priority. Recorded or live *alert signals* generated by an *alerting system* that shares components with a fire alarm system shall, when actuated, take priority over fire alarm messages and signals.

[W] 915.4.2.2 Temporary deactivation. Should the fire alarm system be in the alarm mode when such an *alerting system* is actuated, it shall temporarily cause deactivation of all fire alarm-initiated audible messages or signals during the time period required to transmit the *alert signal*.

[W] 915.4.2.3 Supervisory signal. Deactivation of fire alarm audible and visual notification signals shall cause a supervisory signal for each notification zone affected in the fire alarm system.

915.5 Audibility. Audible characteristics of the *alert signal* shall be in accordance with Section 7.4.1 of NFPA 72 throughout the area served by the *alerting system*.

Exception: Areas served by approved visual or textual notification, if the visible notification appliances are not also used as a fire alarm signal.

[W] 915.6 Visibility. Visible and textual notification appliances are permitted in addition to *alert signal* audibility.

***

Section 11. Chapter 10 of the 2009 International Fire Code is amended as follows:

CHAPTER 10
MEANS OF EGRESS
***
SECTION 1002
DEFINITIONS

1002.1 Definitions. The following words and terms shall, for the purposes of this chapter and as used elsewhere in this code, have the meanings shown herein.

***

EXIT. That portion of a *means of egress* system which is separated from other interior spaces of a building or structure ((~~by fire-resistance-rated construction and opening protectives as required to provide~~)) providing a protected path of egress travel between the *exit access* and the *exit discharge*, and includes required fire-resistance-rated construction and opening protectives. Exits include exterior exit doors at the *level of exit discharge*, vertical *exit enclosures*, *exit passageways*, *exterior exit stairways*, exterior *exit ramps* and *horizontal exits*.

***

EXIT ENCLOSURE. An *exit* component that ((~~is separated from other interior spaces of a building or structure by fire-resistance-rated construction and opening protectives, and~~)) provides for a protected path of egress travel in a vertical or horizontal direction to the *exit discharge* or the *public way*.

***

EXIT PASSAGEWAY. An *exit* component that ((~~is separated from other interior spaces of a building or structure by fire-resistance-rated construction and opening protectives, and~~)) provides for a protected path of egress travel in a horizontal direction to the exit discharge or the public way.

EXIT PLACARD. A non-illuminated sign or a sign painted on a wall indicating the direction of egress.

***

SUITE. A group of patient treatment rooms or patient sleeping rooms within Group I-2 occupancies where staff are in attendance within the *suite*, for supervision of all patients within the suite and the suite is in compliance with the requirements of Sections 1014.2.2 through ((~~1014.2.7~~)) 1014.2.2.5.4.

***

SECTION 1003
GENERAL MEANS OF EGRESS

***

1003.2 Ceiling height. The *means of egress* shall have a ceiling height of not less than 7 feet 6 inches (2286 mm).

Exceptions:

1. ((~~Sloped ceilings~~)) Ceilings in accordance with Section 1208.2 of the *International Building Code*.

((~~2. Ceilings of dwelling units and sleeping units within residential occupancies in accordance with Section 1208.2.~~))

((~~3~~))2. Allowable projections in accordance with Section 1003.3.

((~~4~~))3. Stair headroom in accordance with Section 1009.2.

((~~5~~))4. Door height in accordance with Section 1008.1.1.

((~~6~~))5. Ramp headroom in accordance with Section 1010.5.2.

((~~7~~))6. The clear height of floor levels in vehicular and pedestrian traffic areas in parking garages in accordance with Section 406.2.2 of the *International Building Code*.

((~~8~~))7. Areas above and below *mezzanine* floors in accordance with Section 505.1 of the *International Building Code*.

***

SECTION 1004
OCCUPANT LOAD
****

TABLE 1004.1.1
MAXIMUM FLOOR AREA ALLOWANCES PER OCCUPANT

FUNCTION OF SPACE	FLOOR AREA IN SQ. FT. PER OCCUPANT
Accessory storage areas, mechanical equipment room[1]	300 gross
Agricultural building	300 gross
Aircraft hangars	500 gross
Airport terminal Baggage claim Baggage handling Concourse Waiting areas	 20 gross 300 gross 100 gross 15 gross
Assembly Gaming floors (keno, slots, etc.)	 11 gross
Assembly with fixed seats	See Section 1004.7
Assembly without fixed seats Concentrated (chairs only—not fixed) Standing space Unconcentrated (tables and chairs)	 7 net 5 net 15 net
Bowling centers, allow 5 persons for each lane including 15 feet of runway, and for additional areas	7 net
Business areas without sprinkler protection with sprinkler protection	 100 gross 130 gross
Commercial laboratories	100 gross
Courtrooms—other than fixed seating areas	40 net
Day care	35 net
Dormitories	50 gross
Educational Classroom area Shops, laboratories and other vocational room areas	 20 net 50 net
Exercise rooms	50 gross
H-5 Fabrication and manufacturing areas	200 gross
Industrial areas	100 gross
Institutional areas	

Inpatient treatment areas Outpatient areas Sleeping areas	240 gross 100 gross 120 gross
Kitchens, commercial	200 gross
Library Reading rooms Stack area	 50 net 100 gross
Locker rooms	50 gross
Mercantile Areas on other floors Basement and grade floor areas Storage, stock, shipping areas	60 gross 30 gross 300 gross
Parking garages	200 gross
Residential	200 gross
Skating rinks, swimming pools Rink and pool Decks	 50 gross 15 gross
Stages and platforms	15 net
Warehouses	500 gross

For SI: 1 square foot = 0.0929 m^2.

1. For electrical equipment areas, see also Sections 110.26 and 110.32 through 110-34 of the *Seattle Electrical Code*.

***

SECTION 1005
EGRESS WIDTH

1005.1 Minimum required egress width. The *means of egress* width shall not be less than required by this section. The total width of *means of egress* in inches (mm) shall not be less than the total *occupant load* served by the *means of egress* multiplied by 0.3 inches (7.62 mm) per occupant for stairways and by 0.2 inches (5.08 mm) per occupant for other egress components. The width shall not be less than specified elsewhere in this code. In high-rise buildings for other than H and I-2 occupancies, the total width of means of egress in inches (mm) shall not be less than the total occupant load served by the means of egress multiplied by 0.2 inches (5.1 mm) per occupant for stairways and by 0.15 inches (3.8 mm) per occupant for other egress components in buildings that are provided with sprinkler protection in accordance with 903.3.1.1 or 903.3.1.2. The width at any point in the path of egress travel shall not be less than the width required for doors in Section 1008. Multiple *means of egress* shall be sized such that the loss of any one *means of egress* shall not reduce the available capacity to less than 50 percent of the required capacity. The maximum capacity required from any *story* of a building shall be maintained to the termination of the *means of egress*.

Exceptions:

1. *Means of egress* complying with Section 1028.

2. Aisles complying with Section 1017.
3. Corridors complying with Section 1018.2.
4. Stage stairways and catwalks complying with Section 1015.6.

***

SECTION 1006
MEANS OF EGRESS ILLUMINATION

***

1006.2 Illumination level. Illumination shall be provided at every point in ((T))the *means of egress*. The illumination level shall not be less than 1 foot-candle (11 lux) at the walking surface. Luminaires shall be installed whenever exit signs are required as specified in Section 1011.

Exception: For auditoriums, theaters, concert or opera halls and similar assembly occupancies, the illumination at the walking surface is permitted to be reduced during performances to not less than 0.2 foot-candle (2.15 lux), provided that the required illumination is automatically restored upon activation of a premises' fire alarm system where such system is provided.

Code Alternate CA1006.2: Compliance with the following paragraphs will be deemed to satisfy the requirement for means of egress illumination at every point in the means of egress. Means of egress illumination systems that comply with this Code Alternate shall also comply with Section 1006.3.

1. **Location and Fixture Placement**. Means of egress illumination shall be located in stairways, corridors, halls, passenger elevator cars, lobbies, rooms with an occupant load of 100 or more, and other areas required to provide safe egress from the premises and immediately outside of the building exit when required by the building official. Fixtures shall be installed to not less than the following schedule:

1.1 Interior and exterior stairways and landings and outside building exit	At least one per landing
1.2 Corridors and halls and designated means of egress paths in parking garages	At least one for each 40 lineal feet
1.3 Lobbies, vestibules, foyers, elevator cars and other similar areas as required	At least one for each 250 square feet
1.4 Warehouses	See Item 2 below.

These fixtures are permitted to be included in the watts per square foot calculation for means of egress illumination.

2. **Amount of Illumination**. Where means of egress illumination is required, illumination shall be provided at the rate of 0.1 watt of fluorescent illumination per square foot of area. Installations using incandescent lamps shall have a minimum wattage of at least 3 times the fluorescent requirements. Use of other light sources is subject to the approval of the building official.

Exceptions:

1. In warehouses, the allowable minimum illumination is permitted to be 0.1 watt per square foot (0.03 watts for fluorescent) provided fixtures are placed either:
   - 1.1 Where means of egress pathways are not designated, fixtures shall be placed to cover an area not larger than 1,600 square feet, or
   - 1.2 Where means of egress pathways are designated, fixtures shall be placed at least one for every 40 lineal feet.
2. In theaters, auditoriums or other places of assembly where motion pictures or other projections are made by means of directed light, the minimum allowable illumination is permitted to be reduced to 0.05 watts per square foot of floor area (0.02 watts for fluorescent). The higher level of required illumination shall be automatically restored upon activation of a premises fire alarm system where such system is provided.
3. In Groups B, F-1, M and S-1 occupancies, when approved by the building official, the minimum allowable illumination is permitted to be reduced to 0.05 watts per square foot (0.02 watts for fluorescent) of floor area.
4. In Group B occupancies and open parking garages, when approved by the building official, the illumination is permitted to be eliminated when within 50 feet of a window wall or open side and where light is not totally obscured.

Means of egress illumination fixtures shall be spaced and designed to give adequate distribution of light for safe egress and so that the failure of any individual lighting element, such as the burning out of a light bulb, will not leave any space in total darkness. Illumination from battery operated fixtures shall provide the same level of illumination required for hard-wired fixtures.

1006.3 Illumination ((~~emergency~~)) power supply. The power supply for *means of egress* illumination shall normally be provided by the premises' electrical supply. In the event of power supply failure, an emergency ((~~electrical~~)) power system shall automatically illuminate all of the following areas:

1. *Aisles* and unenclosed egress *stairways* in rooms and spaces that require two or more *means of egress*.
2. *Corridors*, *exit enclosures* and *exit passageways* in buildings required to have two or more *exits*.
3. Exterior egress components at other than their *levels of exit discharge* until *exit discharge* is accomplished for buildings required to have two or more *exits*.
4. Interior *exit discharge* elements, as permitted in Section 1027.1, in buildings required to have two or more *exits*.
5. Exterior landings as required by Section 1008.1.6 for *exit discharge* doorways in buildings required to have two or more *exits*.

The emergency power system shall provide power for a duration of not less than 90 minutes and shall consist of storage batteries, unit equipment or an on-site generator. The installation of the emergency power system shall be in accordance with Chapter 27.

***

SECTION 1007
ACCESSIBLE MEANS OF EGRESS

[W] 1007.1 Accessible means of egress required. *Accessible means of egress* shall comply with this section. *Accessible* spaces shall be provided with not less than one *accessible means of egress*. Where more than one *means of egress* are required by Section 1015.1 or 1021.1 from any *accessible* space, each *accessible* portion of the space shall be served by not less than two *accessible means of egress*.

Exceptions:

1. *Accessible means of egress* are not required in alterations to existing buildings.
2. One *accessible means of egress* is required from an *accessible mezzanine* level in accordance with Section 1007.3, 1007.4 or 1007.5.
3. In assembly areas with sloped or stepped *aisles*, one *accessible means of egress* is permitted where the common path of travel is *accessible* and meets the requirements in Section 1028.8.
4. In parking garages, *accessible means of egress* are not required to serve parking areas that do not contain *accessible* parking spaces or other accessible elements.

1007.2 Continuity and components. Each required *accessible means of egress* shall be continuous to a *public way* and shall consist of one or more of the following components:

1. *Accessible routes* complying with Section 1104 of the *International Building Code*.
2. *Interior exit stairways* complying with Sections 1007.3 and 1022.
3. *Exterior exit stairways* complying with Sections 1007.3 and 1026.
4. Elevators complying with Section 1007.4.

Interpretation I1007.2a: An exit passageway is not required on the level of exit discharge to connect the elevator with the exterior exit door.

5. Platform lifts complying with Section 1007.5.
6. *Horizontal exits* complying with Section 1025.
7. *Ramps* complying with Section 1010.
8. *Areas of refuge* complying with Section 1007.6.

Exceptions:

1. Where the *exit discharge* is not *accessible*, an exterior area for assisted rescue must be provided in accordance with Section 1007.7.
2. Where the *exit stairway* is open to the exterior, the *accessible means of egress* shall include either an *area of refuge* in accordance with Section 1007.6 or an exterior area for assisted rescue in accordance with Section 1007.7.

1007.2.1 Elevators required. In buildings where a required *accessible* floor is four or more stories above or below a *level of exit discharge*, at least one required *accessible means of egress* shall be an elevator complying with Section 1007.4.

Interpretation I1007.2b: The level of exit discharge is not counted when determining whether an accessible floor is four stories above or below a level of exit discharge.

Exceptions:

1. In buildings equipped throughout with an *automatic sprinkler system* installed in accordance with Section 903.3.1.1 or 903.3.1.2, the elevator shall not be required on floors provided with a *horizontal exit* and located at or above the *levels of exit discharge*.
2. In buildings equipped throughout with an *automatic sprinkler system* installed in accordance with Section 903.3.1.1 or 903.3.1.2, the elevator shall not be required on floors provided with a ramp conforming to the provisions of Section 1010.

Interpretation I1007.2c: In exception 2, the ramp shall be part of an accessible means of egress.

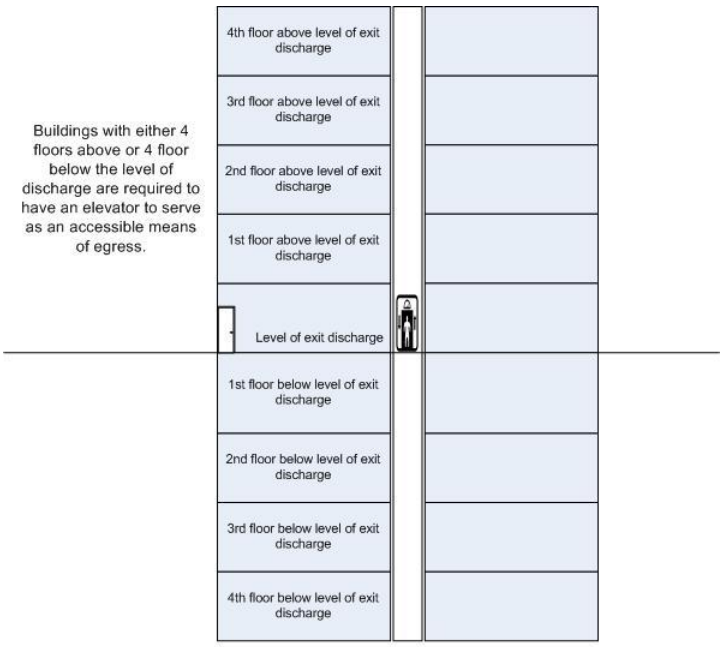

Figure 1007.2b

***

1007.4 Elevators. In order to be considered part of an *accessible means of egress*, an elevator shall comply with the emergency operation and signaling device requirements of Section 2.27 of ASME A17.1. ((~~Standby~~))A *legally required standby power system* shall be provided for operation of the elevator, the shunt trip and elevator car lighting in accordance with Chapter 27 of the *International Building Code* and ((~~3003~~))the *Seattle Electrical Code*. The elevator shall be accessed from either an *area of refuge* complying with Section 1007.6 or a *horizontal exit*.

Exceptions:

1. Elevators are not required to be accessed from an *area of refuge* or *horizontal exit* in *open parking garages*.
2. Elevators are not required to be accessed from an *area of refuge* or *horizontal exit* in buildings and facilities equipped throughout with an *automatic sprinkler system* installed in accordance with Section 903.3.1.1 or 903.3.1.2.
3. Elevators not required to be located in a shaft in accordance with Section 708.2 of the *International Building Code* are not required to be accessed from an *area of refuge* or *horizontal exit*.
4. Elevators are not required to be accessed from an *area of refuge* or *horizontal exit* for smoke protected seating areas complying with Section 1028.6.2.

1007.5 Platform lifts. Platform (wheelchair) lifts shall not serve as part of an *accessible means of egress*, except where allowed as part of a required *accessible route* in Section 1109.7, Items 1 through 9 of the *International Building Code*. ((~~Standby~~)) *Legally required standby power system as* defined by the *Seattle Electrical Code* shall be provided in accordance with ((~~Section 604.2.6 of this code~~))Chapter 27 of the *Seattle Building Code* for platform lifts permitted to serve as part of a *means of egress*.

1007.5.1 Openness. Platform lifts on an *accessible means of egress* shall not be installed in a fully enclosed hoistway.

1007.6 Areas of refuge. Every required *area of refuge* shall be *accessible* from the space it serves by an *accessible means of egress*. The maximum travel distance from any *accessible* space to an *area of refuge* shall not exceed the travel distance permitted for the occupancy in accordance with Section 1016.1. Every required *area of refuge* shall have direct access to a *stairway* within an *exit enclosure* complying with Sections 1007.3 and 1022 or an elevator complying with Section 1007.4. Where an elevator lobby is used as an *area of refuge*, the shaft and lobby shall comply with Section ((~~1022.9 for *smokeproof enclosures*~~)) 708.14.2 of the *Seattle Building Code* for elevator hoistway pressurization except where the elevators are in an *area of refuge* formed by a *horizontal exit* or *smoke barrier*.

Exceptions:

1. A *stairway* serving an *area of refuge* is not required to be enclosed where permitted in Sections 1016.1 and 1022.1.

2. ((~~*Smokeproof enclosure*~~)) Elevator hoistway pressurization is not required for an elevator lobby used as an *area of refuge* not required to be enclosed.

***

1007.8 Two-way communication. A two-way communication system shall be provided at the elevator landing on each *accessible* floor that is one or more stories above or below the *story* of *exit discharge* complying with Sections 1007.8.1 and 1007.8.2.

Exceptions:

1. Two-way communication systems are not required at the elevator landing where the two-way communication system is provided within *areas of refuge* in accordance with Section 1007.6.3.
2. Two-way communication systems are not required on floors provided with *exit ramps* conforming to the provisions of Section 1010.

[W] 1007.8.1 System requirements. Two-way communication systems shall provide communication between each required location and the fire command center or a central control point location *approved* by the fire department.
Where the central control point is not constantly attended, a two-way communication system shall have a timed automatic telephone dial-out capability to a monitoring location ((~~or 911~~)). The two-way communication system shall include both audible and visible signals. The two-way communication system shall have a battery backup or an approved alternate source of power that is capable of 90 minutes use upon failure of the normal power source.

1007.8.2 Directions. Directions for the use of the two-way communication system, instructions for summoning assistance via the two-way communication system and written identification of the location shall be posted adjacent to the two-way communication system.

***

SECTION 1008
DOORS, GATES AND TURNSTILES

1008.1 Doors. *Means of egress* doors shall meet the requirements of this section. Doors serving a *means of egress* system shall meet the requirements of this section and Section 1020.2. Doors provided for egress purposes in numbers greater than required by this code shall meet the requirements of this section. See Section 3201 of the *Seattle Building Code* for doors swinging over public property.

Means of egress doors shall be readily distinguishable from the adjacent construction and finishes such that the doors are easily recognizable as doors. Mirrors or similar reflecting materials shall not be used on *means of egress* doors. *Means of egress* doors shall not be concealed by curtains, drapes, decorations or similar materials.

* * *

1008.1.4 Special doors. Special doors and security grilles shall comply with the requirements of Sections 1008.1.4.1 through 1008.1.4.5.

1008.1.4.1 Revolving doors. Revolving doors shall comply with the following:
1. Each revolving door shall be capable of collapsing into a bookfold position with parallel egress paths providing an aggregate width of 36 inches (914 mm).
2. A revolving door shall not be located within 10 feet (3048 mm) of the foot of or top of *stairs* or escalators. A dispersal area shall be provided between the *stairs* or escalators and the revolving doors.
3. The revolutions per minute (rpm) for a revolving door shall not exceed those shown in Table 1008.1.4.1.
4. Each revolving door shall have a side-hinged swinging door which complies with Section 1008.1 in the same wall and within 10 feet (3048 mm) of the revolving door.
5. Revolving doors shall not be part of an *accessible route* required by Section 1007 and Chapter 11.

1008.1.4.1.1 Egress component. A revolving door used as a component of a *means of egress* shall comply with Section 1008.1.4.1 and the following three conditions:
1. Revolving doors shall not be given credit for more than 50 percent of the required egress capacity.
2. Each revolving door shall be credited with no more than a 50-person capacity.
3. Each revolving door shall be capable of being collapsed when a force of not more than 130 pounds (578 N) is applied within 3 inches (76 mm) of the outer edge of a wing.

1008.1.4.1.2 Other than egress component. A revolving door used as other than a component of a *means of egress* shall comply with Section 1008.1.4.1. The collapsing force of a revolving door not used as a component of a *means of egress* shall not be more than 180 pounds (801 N).

Exception: A collapsing force in excess of 180 pounds (801 N) is permitted if the collapsing force is reduced to not more than 130 pounds (578 N) when at least one of the following conditions is satisfied:

1. There is a power failure or power is removed to the device holding the door wings in position.
2. There is an actuation of the *automatic sprinkler system* where such system is provided.
3. There is an actuation of a smoke detection system which is installed in accordance with Section 907 to provide coverage in areas within the building which are within 75 feet (22 860 mm) of the revolving doors.
4. There is an actuation of a manual control switch, in an *approved* location and clearly defined, which reduces the holding force to below the 130-pound (578 N) force level.

1008.1.4.2 Power-operated doors. Where *means of egress* doors are operated by power, such as doors with a photoelectric-actuated mechanism to open the door upon the approach of a person, or doors with power-assisted manual operation, the design shall be such that in the event of power failure, the door is capable of being opened manually to permit *means of egress* travel or closed where necessary to safeguard *means of egress*. The forces required to open these doors manually shall not exceed those specified in Section 1008.1.3, except that the force to set the door in motion shall not exceed 50 pounds (220 N). The door shall be capable of swinging from any position to the full width of the opening in which such door is installed when a force is applied to the door on the side from which egress is made. Full-power-operated doors shall comply with BHMA A156.10. Power-assisted and low-energy doors shall comply with BHMA A156.19.

Exceptions:

1. Occupancies in Group I-3.
2. Horizontal sliding doors complying with Section 1008.1.4.3.
3. For a biparting door in the emergency breakout mode, a door leaf located within a multiple-leaf opening shall be exempt from the minimum 32-inch (813 mm) single-leaf requirement of Section 1008.1.1, provided a minimum 32-inch (813 mm) clear opening is provided when the two biparting leaves meeting in the center are broken out.

1008.1.4.3 Horizontal sliding doors. In other than Group H occupancies, horizontal sliding doors permitted to be a component of a *means of egress* in accordance with Exception 6 to Section 1008.1.2 shall comply with all of the following criteria:

1. The doors shall be power operated and shall be capable of being operated manually in the event of power failure.
2. The doors shall be openable by a simple method from both sides without special knowledge or effort.
3. The force required to operate the door shall not exceed 30 pounds (133 N) to set the door in motion and 15 pounds (67 N) to close the door or open it to the minimum required width.
4. The door shall be openable with a force not to exceed 15 pounds (67 N) when a force of 250 pounds (1100 N) is applied perpendicular to the door adjacent to the operating device.
5. The door assembly shall comply with the applicable *fire protection rating* and, where rated, shall be self-closing or automatic closing by smoke detection in accordance with Section 715.4.8.3 of the *International Building Code*, shall be installed in accordance with NFPA 80 and shall comply with Section 715 of the *International Building Code*.
6. The door assembly shall have an integrated standby power supply.
7. The door assembly power supply shall be electrically supervised.
8. The door shall open to the minimum required width within 10 seconds after activation of the operating device.

1008.1.4.4 Access-controlled egress doors. The entrance doors in a *means of egress* in buildings with an occupancy in Group A, B, E, I-2, M, R-1 or R-2 and entrance doors to tenant spaces in occupancies in Groups A, B, E, I-2, M, R-1 and R-2 are permitted to be equipped with an *approved* entrance and egress access control system which shall be installed in accordance with all of the following criteria:

1. A sensor shall be provided on the egress side arranged to detect an occupant approaching the doors. The doors shall be arranged to unlock by a signal from or loss of power to the sensor.
2. Loss of power to that part of the access control system which locks the doors shall automatically unlock the doors.
3. The doors shall be arranged to unlock from a manual unlocking device located 40 inches to 48 inches (1016mm to 1219 mm) vertically above the floor and within 5 feet (1524 mm) of the secured doors. Ready access shall be provided to the manual unlocking device and the device shall be clearly identified by a sign that reads "PUSH TO EXIT." When operated, the manual unlocking device shall result in direct interruption of power to the lock—independent of the access control system electronics—and the doors shall remain unlocked for a minimum of 30 seconds.
4. Activation of the building fire alarm system, if provided, shall automatically unlock the doors, and the doors shall remain unlocked until the fire alarm system has been reset.
5. Activation of the building automatic sprinkler or fire detection system, if provided, shall automatically unlock the doors. The doors shall remain unlocked until the fire alarm system has been reset.
6. Entrance doors in buildings with an occupancy in Group A, B, E or M shall not be secured from the egress side during periods that the building is open to the general public.
7. The access control system shall be listed or shall be comprised of approved components.

Note: Components bearing a "recognized component" mark from an approved agency shall be approved.

1008.1.4.5 Security grilles. In Groups B, F, M and S, horizontal sliding or vertical security grilles are permitted at the main exit and shall be openable from the inside without the use of a key or special knowledge or effort during periods that the space is occupied. The grilles shall remain secured in the full-open position during the period of occupancy by the general public. Where two or more *means of egress* are required, not more than one-half of the *exits* or *exit access doorways* shall be equipped with horizontal sliding or vertical security grilles.

* * *

1008.1.6 Landings at doors. Landings shall have a width not less than the width of the *stairway* or the door, whichever is greater. Doors in the fully open position shall not reduce a required dimension by more than 7 inches (178 mm). When a landing serves an *occupant load* of 50 or more, doors in any position shall not reduce the landing to less than one-half its required width. When doors open over landings, doors in any position shall not reduce the landing length

to less than 12 inches (305 mm). Landings shall have a length measured in the direction of travel of not less than 44 inches (1118 mm).

Exception: Landing length in the direction of travel in Groups R-3 and U and within individual units of Group R-2 need not exceed 36 inches (914 mm).

Interpretation I1008.1.6: Landing length, width and slope shall be measured as specified in Section 1009.5 and 1009.6.1. See Figures 1008.1.6(1), 1008.1.6(2) and 1008.1.6(3) for illustrations of the requirements of this section.

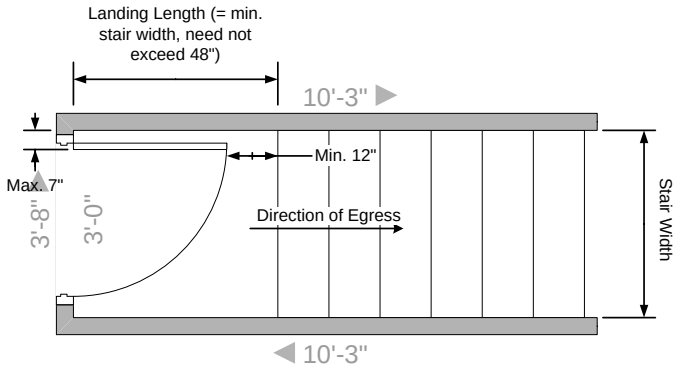

Figure 1008.1.6(1)
(Landing Dimensions Only)

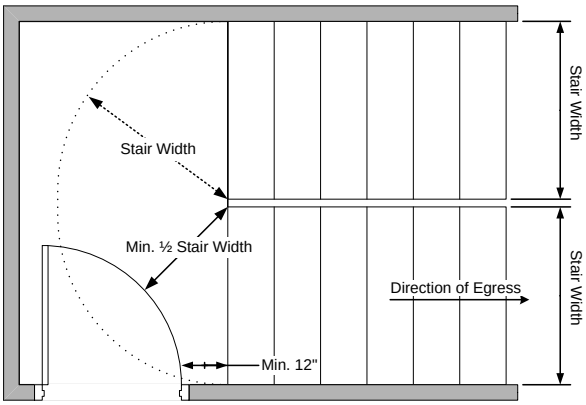

Figure 1008.1.6(2)
(Landing Dimensions Only)

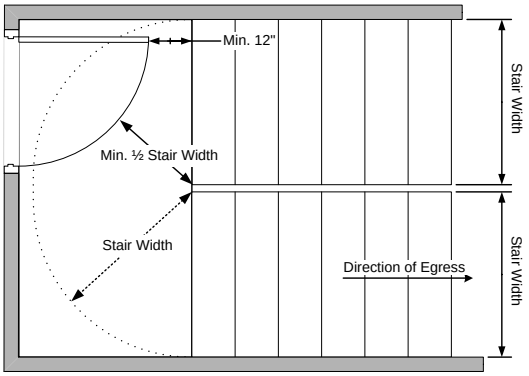

Figure 1008.1.6(3)
(Landing Dimensions Only)

* * *

1008.1.9 Door operations. Except as specifically permitted by this section egress doors shall be readily openable from the egress side without the use of a key or special knowledge or effort.

1008.1.9.1 Hardware. Door handles, pulls, latches, locks and other operating devices on doors required to be *accessible* by Chapter 11 of the *International Building Code* shall not require tight grasping, tight pinching or twisting of the wrist to operate.

1008.1.9.2 Hardware height. Door handles, pulls, latches, locks and other operating devices shall be installed 34 inches (864 mm) minimum and 48 inches (1219 mm) maximum above the finished floor. Locks used only for security purposes and not used for normal operation are permitted at any height.

> **Exception:** Access doors or gates in barrier walls and fences protecting pools, spas and hot tubs shall be permitted to have operable parts of the release of latch on self-latching devices at 54 inches (1370 mm) maximum above the finished floor or ground, provided the self-latching devices are not also self-locking devices operated by means of a key, electronic opener or integral combination lock.

1008.1.9.3 Locks and latches. Locks and latches shall be permitted to prevent operation of doors where any of the following exists:

1. Places of detention or restraint as approved by the building official.
2. In buildings in occupancy Group A having an *occupant load* of 300 or less, Groups B, F, M and S, and in *places of religious worship*, the main exterior door or doors are permitted to be equipped with key-operated locking devices from the egress side provided:
   - 2.1. The locking device is readily distinguishable as locked;
   - 2.2. A readily visible durable sign is posted on the egress side on or adjacent to the door stating: THIS DOOR TO REMAIN UNLOCKED ((~~WHEN BUILDING IS OCCUPIED~~))

DURING BUSINESS HOURS. The sign shall be in letters 1 inch (25 mm) high on a contrasting background; and

2.3. The use of the key-operated locking device is revokable by the *building official* for due cause.

3. Where egress doors are used in pairs, *approved* automatic flush bolts shall be permitted to be used, provided that the door leaf having the automatic flush bolts has no doorknob or surface-mounted hardware on the egress side of the door.

4. Doors from individual dwelling or sleeping units of Group R occupancies having an *occupant load* of 10 or less are permitted to be equipped with a night latch, dead bolt or security chain, provided such devices are openable from the inside without the use of a key or tool.

5. *Fire doors* after the minimum elevated temperature has disabled the unlatching mechanism in accordance with listed fire door test procedures.

6. Approved, listed locks without delayed egress shall be permitted in Group R-2 boarding homes licensed by Washington state, provided that:

6.1. The clinical needs of one or more patients require specialized security measures for their safety.

6.2. The doors unlock upon actuation of the automatic sprinkler system or automatic fire detection system.

6.3. The doors unlock upon loss of electrical power controlling the lock or lock mechanism.

6.4. The lock shall be capable of being deactivated by a signal from a switch located in an approved location.

6.5. There is a system, such as a keypad and code, in place that allows visitors, staff persons and appropriate residents to exit. Instructions for exiting shall be posted within six feet of the door.

7. Doors from elevator lobbies providing access to exits are permitted to be locked during or after business hours where items 7.1 through 7.5 are satisfied.

7.1. The lobby doors shall unlock automatically upon fire alarm.

7.2. The lobby doors shall unlock automatically upon power loss.

7.3. The alarm system shall include smoke detection in the elevator lobby and at least two detectors on the tenant side within 15 feet of the door;

7.4. Access through the tenant portion of the building to both exits shall be unobstructed; and

7.5. The building shall have an automatic sprinkler system throughout in accordance with Section 903.3.1.1 or 903.3.1.2.

1008.1.9.4 Bolt locks. Manually operated flush bolts or surface bolts are not permitted on required means of egress doors.

Exceptions:

1. On doors not required for egress in individual dwelling units or sleeping units.

2. Where a pair of doors serves a storage or equipment room, manually operated edge- or surface-mounted bolts <u>or self-latching flush bolts</u> are permitted on the inactive leaf.
3. Where a pair of doors serves an *occupant load* of less than 50 persons in a Group B, F or S occupancy, manually operated edge- or surface-mounted bolts are permitted on the inactive leaf. The inactive leaf shall contain no doorknobs, panic bars or similar operating hardware.
4. Where a pair of doors serves a Group B, F or S occupancy, manually operated edge- or surface-mounted bolts are permitted on the inactive leaf provided such inactive leaf is not needed to meet egress width requirements and the building is equipped throughout with an *automatic sprinkler system* in accordance with Section 903.3.1.1. The inactive leaf shall contain no doorknobs, panic bars or similar operating hardware.
5. Where a pair of doors serves patient care rooms in Group I-2 occupancies, self-latching edge or surface-mounted bolts are permitted on the inactive leaf provided that the inactive leaf is not needed to meet egress width requirements and the inactive leaf contains no doorknobs, panic bars or similar operating hardware.

1008.1.9.5 Unlatching. The unlatching of any door or leaf shall not require more than one operation.

Exceptions:
1. Places of detention or restraint.
2. Where manually operated bolt locks are permitted by Section 1008.1.9.4.
3. Doors with automatic flush bolts as permitted by Section 1008.1.9.3, Exception 3.
4. Doors from individual dwelling units and sleeping units of Group R occupancies as permitted by Section 1008.1.9.3, Exception 4.

((~~1008.1.9.5.1 Closet and bathroom doors in Group R-4 occupancies.~~ ~~In Group R-4 occupancies, closet doors that latch in the closed position shall be openable from inside the closet, and bathroom doors that latch in the closed position shall be capable of being unlocked from the ingress side.~~))

1008.1.9.6 Special locking arrangements in Group I-2. *Approved* ((~~delayed egress~~)) locks shall be permitted in a Group I-2 occupancy where the clinical needs of persons receiving care require such locking. ((~~Delayed egress locks~~))<u>Locks</u> shall be permitted in such occupancies where the building is equipped throughout with an *automatic sprinkler system* in accordance with Section 903.3.1.1 or an *approved* automatic smoke or heat detection system installed in accordance with Section 907, provided that the doors unlock in accordance with Items 1 through 6 below. ((~~A building occupant shall not be required to pass through more than one door equipped with a delayed egress lock before entering an *exit*.~~))
1. The doors unlock upon actuation of the *automatic sprinkler system* or automatic fire detection system.
2. The doors unlock upon loss of power controlling the lock or lock mechanism.

3. The door locks shall have the capability of being unlocked by a signal from the fire command center, a nursing station or other *approved* location.
4. The procedures for the operation(s) of the unlocking system shall be described and *approved* as part of the emergency planning and preparedness required by Chapter 4.
5. ((~~All clinical staff shall have the keys, codes or other means necessary to operate the locking devices.~~))There is a system, such as a keypad and code, in place that allows visitors, staff persons and appropriate residents to exit. Instructions for exiting shall be posted within six feet of the door.
6. Emergency lighting shall be provided at the door.

Exception: Items 1 through 3 and 5 shall not apply to doors to areas where persons who, because of clinical needs, require restraint or containment as part of the function of a Group I-2 mental hospital provided that all clinical staff shall have the keys, codes or other means necessary to operate the locking devices.

1008.1.9.7 Delayed egress locks. *Approved*, *listed*, delayed egress locks shall be permitted to be installed on doors serving any occupancy except Group A, E and H occupancies in buildings that are equipped throughout with an *automatic sprinkler system* in accordance with Section 903.3.1.1 or an *approved* automatic smoke or heat detection system installed in accordance with Section 907, provided that the doors unlock in accordance with Items 1 through 6 below. Delayed egress locks are permitted in libraries in both Group A and E occupancies in locations other than at main exit doors, and in Group E day care occupancies. A building occupant shall not be required to pass through more than one door equipped with a delayed egress lock before entering an *exit*.
1. The doors unlock upon actuation of the *automatic sprinkler system* or automatic fire detection system.
2. The doors unlock upon loss of power controlling the lock or lock mechanism.
3. The door locks shall have the capability of being unlocked by a signal from the fire command center.
4. The initiation of an irreversible process which will release the latch in not more than 15 seconds when a force of not more than 15 pounds (67 N) is applied for 1 second to the release device. Initiation of the irreversible process shall activate an audible signal in the vicinity of the door. Once the door lock has been released by the application of force to the releasing device, relocking shall be by manual means only.

Exception: Where approved, a delay of not more than 30 seconds is permitted.

5. A sign shall be provided on the door located above and within 12 inches (305 mm) of the release device reading: PUSH UNTIL ALARM SOUNDS. DOOR CAN BE OPENED IN 15 [30] SECONDS.
6. Emergency lighting shall be provided at the door.

1008.1.9.8 Electromagnetically locked egress doors. Doors in the *means of egress* that are not otherwise required to have panic hardware in buildings with an occupancy in Group A, B,

E, M, R-1 or R-2 and doors to tenant spaces in Group A, B, E, M, R-1 or R-2 shall be permitted to be electromagnetically locked if equipped with *listed* hardware that incorporates a built-in switch and meet the requirements below:
1. The *listed* hardware that is affixed to the door leaf has an obvious method of operation that is readily operated under all lighting conditions.
2. The *listed* hardware is capable of being operated with one hand.
3. Operation of the *listed* hardware releases to the electromagnetic lock and unlocks the door immediately.
4. Loss of power to the *listed* hardware automatically unlocks the door.

1008.1.9.9 Locking arrangements in correctional facilities. In occupancies in Groups A-2, A-3, A-4, B, E, F, I-2, I-3, M and S within correctional and detention facilities, doors in *means of egress* serving rooms or spaces occupied by persons whose movements are controlled for security reasons shall be permitted to be locked when equipped with egress control devices which shall unlock manually and by at least one of the following means:
1. Activation of an *automatic sprinkler system* installed in accordance with Section 903.3.1.1;
2. Activation of an *approved* manual alarm box; or
3. A signal from a *constantly attended location*.

1008.1.9.10 Stairway doors. *Interior stairway means of egress* doors shall be openable from both sides without the use of a key or special knowledge or effort.

Exceptions:
1. *Stairway* discharge doors shall be openable from the egress side and shall only be locked from the opposite side.
2. This section shall not apply to doors arranged in accordance with Section 403.5.3.
3. In *stairways* serving not more than four stories, doors are permitted to be locked from the side opposite the egress side, provided they are openable from the egress side and capable of being unlocked simultaneously without unlatching upon a signal from the fire command center, if present, or a signal by emergency personnel from a single location inside the main entrance to the building.

1008.1.10 Panic and fire exit hardware. Doors serving a Group H occupancy and doors serving rooms or spaces with an *occupant load* of 50 or more in a Group A or E occupancy shall not be provided with a latch or lock unless it is panic hardware or *fire exit hardware*.

Exception: A main *exit* of a Group A occupancy in compliance with Section 1008.1.9.3, Item 2.

Electrical rooms with equipment rated 1,200 amperes or more and over 6 feet (1829 mm) wide that contain overcurrent devices, switching devices or control devices with *exit* or *exit access* doors shall be equipped with panic hardware or *fire exit hardware*. The doors shall swing in the direction of egress travel.

1008.1.10.1 Installation. Where panic or *fire exit hardware* is installed, it shall comply with the following:
1. Panic hardware shall be *listed* in accordance with UL 305;
2. *Fire exit hardware* shall be *listed* in accordance with UL 10C and UL 305;
3. The actuating portion of the releasing device shall extend at least one-half of the door leaf width; and
4. The maximum unlatching force shall not exceed 15 pounds (67 N).

1008.1.10.2 Balanced doors. If *balanced doors* are used and panic hardware is required, the panic hardware shall be the push-pad type and the pad shall not extend more than one-half the width of the door measured from the latch side.

***

SECTION 1009
STAIRWAYS

1009.1 Stairway width. The width of *stairways* shall be determined as specified in Section 1005.1, but such width shall not be less than 44 inches (1118 mm). See Section 1007.3 for *accessible means of egress stairways*.

Exceptions:
1. *Stairways* serving an *occupant load* of less than 50 shall have a width of not less than 36 inches (914 mm).
2. *Spiral stairways* as provided for in Section 1009.9.
3. *Aisle stairs* complying with Section 1028.
4. Where an incline platform lift or stairway chairlift is installed on *stairways* serving occupancies in Group R-3, or within dwelling units in occupancies in Group R-2, a clear passage width not less than 20 inches (508 mm) shall be provided. If the seat and platform can be folded when not in use, the distance shall be measured from the folded position.
5. Stairways that are neither part of a required means of egress nor an accessible route.

***

1009.4 Stair treads and risers. *Stair* treads and risers shall comply with Sections 1009.4.1 through 1009.4.5.

1009.4.1 Dimension reference surfaces. For the purpose of this section, all dimensions are exclusive of carpets, rugs or runners.

1009.4.2 Riser height and tread depth. *Stair* riser heights shall be 7 inches (178 mm) maximum and 4 inches (102 mm) minimum. The riser height shall be measured vertically between the leading edges of adjacent treads. Rectangular tread depths shall be 11 inches (279 mm) minimum measured horizontally between the vertical planes of the foremost projection of adjacent treads and at a right angle to the tread's leading edge. *Winder* treads shall have a

minimum tread depth of 11 inches (279 mm) measured between the vertical planes of the foremost projection of adjacent treads at the intersections with the walkline and a minimum tread depth of 10 inches (254 mm) within the clear width of the *stair*.

Exceptions:

1. *Alternating tread devices* in accordance with Section 1009.10.
2. Ship ladders in accordance with Section 1009.11.
3. *Spiral stairways* in accordance with Section 1009.9.
4. *Aisle stairs* in assembly seating areas where the *stair* pitch or slope is set, for sightline reasons, by the slope of the adjacent seating area in accordance with Section 1028.11.2.
5. In Group R-3 occupancies; within dwelling units in Group R-2 occupancies; and in Group U occupancies that are accessory to a Group R-3 occupancy or accessory to individual dwelling units in Group R-2 occupancies; the maximum riser height shall be 7-3/4 inches (197 mm); the minimum tread depth shall be 10 inches (254 mm); the minimum *winder* tread depth at the walkline shall be 10 inches (254 mm); and the minimum *winder* tread depth shall be 6 inches (152 mm).A *nosing* not less than 3/4 inch (19.1 mm) but not more than 1-1/4 inches (32 mm) shall be provided on *stairways* with solid risers where the tread depth is less than 11 inches (279 mm).
6. See Section 3404.1 of the *International Building Code* for the replacement of existing *stairways*.
7. In Group I-3 facilities, *stairways* providing access to guard towers, observation stations and control rooms, not more than 250 square feet (23 m2) in area, shall be permitted to have a maximum riser height of 8 inches (203 mm) and a minimum tread depth of 9 inches (229 mm).

1009.4.3 Winder treads. *Winder* treads are not permitted in *means of egress stairways* except within a dwelling unit.

Exceptions:

1. Curved *stairways* in accordance with Section 1009.8.
2. *Spiral stairways* in accordance with Section 1009.9.

1009.4.4 Dimensional uniformity. *Stair* treads and risers shall be of uniform size and shape. The tolerance between the largest and smallest riser height or between the largest and smallest tread depth shall not exceed 3/8 inch (9.5 mm) in any *flight* of *stairs*. The greatest *winder* tread depth at the walkline within any *flight* of *stairs* shall not exceed the smallest by more than 3/8 inch (9.5 mm).

Exceptions:

1. Nonuniform riser dimensions of *aisle stairs* complying with Section 1028.11.2.
2. Consistently shaped *winders*, complying with Section 1009.4.2, differing from rectangular treads in the same *stairway flight*.

Where the bottom or top riser adjoins a sloping *public way*, walkway or driveway having an established grade and serving as a landing, the bottom or top riser is permitted to be reduced along the slope. ((~~to less than 4 inches (102 mm) in height, with the variation in height of the bottom or top riser not to exceed one unit vertical in 12 units horizontal (8 percent slope) of stairway width. The nosings or leading edges of treads at such nonuniform height risers shall have a distinctive marking stripe, different from any other nosing marking provided on the stair flight. The distinctive marking stripe shall be visible in descent of the stair and shall have a slip-resistant surface. Marking stripes shall have a width of at least 1 inch (25 mm) but not more than 2 inches (51 mm).~~))

1009.4.5 Profile. The radius of curvature at the leading edge of the tread shall be not greater than 9/16 inch (14.3 mm). Beveling of *nosings* shall not exceed 9/16 inch (14.3 mm). Risers shall be solid and vertical or sloped under the tread above from the underside of the *nosing* above at an angle not more than 30 degrees (0.52 rad) from the vertical. The leading edge (*nosings*) of treads shall project not more than 1-1/4 inches (32 mm) beyond the tread below and all projections of the leading edges shall be of uniform size, including the leading edge of the floor at the top of a *flight*.

Exceptions:

1. Solid risers are not required for *stairways* that are not required to comply with Section 1007.3, provided that the opening between treads does not permit the passage of a sphere with a diameter of 4 inches (102 mm).
2. Solid risers are not required for occupancies in Group I-3 or in Group F, H and S occupancies other than areas accessible to the public. There are no restrictions on the size of the opening in the riser.
3. Solid risers are not required for *spiral stairways* constructed in accordance with Section 1009.9.
4. Solid risers are not required for *alternating tread devices* constructed in accordance with Section 1009.10.

***

1009.7 Vertical rise. A *flight* of *stairs* shall not have a vertical rise greater than 12 feet (3658 mm) between floor levels or landings.

Exceptions:

1. *Aisle stairs* complying with Section 1028.
2. *Alternating tread devices* used as a *means of egress* shall not have a rise greater than 20 feet (6096 mm) between floor levels or landings.
3. Stairways that are not part of a required means of egress.

***

1009.13 Stairway to roof. In buildings four or more stories above grade plane, one stairway shall extend to the roof surface unless the roof has a slope steeper than four units vertical in 12

units horizontal (33-percent slope). In buildings without an occupied roof, access to the roof from the top story shall be permitted to be by an alternating tread device.

1009.13.1 Roof access. Where a stairway is provided to a roof, access to the roof shall be provided through a penthouse complying with Section 1509.2.
Exception: In buildings without an occupied roof, access to the roof shall be permitted to be a roof hatch or trap door not less than 16 square feet (1.5 m2) in area and having a minimum dimension of 2 feet 6 inches (((~~610~~))762 mm).

***

[W] 1009.15 Stairways in individual dwelling units. Stairs or ladders within individual dwelling units used for access to areas of 200 square feet (18.6 m^2) or less which do not contain the primary bathroom or kitchen are exempt from the requirements of Section 1009.

SECTION 1010
RAMPS

1010.1 Scope. The provisions of this section shall apply to *ramps* used as a component of a *means of egress*.

Exceptions:

1. Other than *ramps* that are part of the *accessible routes* providing access in accordance with Sections 1108.2 through 1108.2.4 and 1108.2.6 of the *International Building Code*, ramped *aisles* within assembly rooms or spaces shall conform with the provisions in Section 1028.11.
2. Curb *ramps* shall comply with ICC A117.1.
3. Vehicle ramps in parking garages for pedestrian *exit access* shall not be required to comply with Sections 1010.3 through 1010.9 when they are not an *accessible route* serving *accessible* parking spaces((~~,~~)) or other required accessible elements ((~~or part of an *accessible means of egress*~~)).
4. In a parking garage where one accessible means of egress serving accessible parking spaces or other accessible elements is provided, a second accessible means of egress serving that area shall be permitted to include a vehicle ramp that does not comply with Sections 1010.4, 1010,5 and 1010.8. A landing complying with Sections 1010.6.1 and 1010.6.4 shall be provided at any change of direction in the accessible means of egress.

***

SECTION 1011
EXIT SIGNS

1011.1 Where required. *Exits* and *exit access* doors shall be marked by an *approved exit* sign readily visible from any direction of egress travel. The path of egress travel to *exits* and within *exits* shall be marked by readily visible *exit* signs to clearly indicate the direction of egress travel

in cases where the *exit* or the path of egress travel is not immediately visible to the occupants. Intervening *means of egress* doors within *exits* shall be marked by *exit* signs. *Exit* sign placement shall be such that no point in an *exit access corridor* or *exit passageway* is more than 100 feet (30 480 mm) or the *listed* viewing distance for the sign, whichever is less, from the nearest visible *exit* sign. Either exit signs or exit placards shall be located at any other location determined by the building official to be necessary to clearly indicate the direction of egress.

Exceptions:

1. *Exit* signs are not required in rooms or areas that require only one *exit* or *exit access* other than in buildings designed with a single exit stairway according to Section 1021.2.1 item 3.
2. Main exterior *exit* doors or gates that are obviously and clearly identifiable as *exits* need not have *exit* signs where *approved* by the *building official*.
3. *Exit* signs are not required in occupancies in Group U and individual sleeping units or dwelling units in Group R-1, R-2 or R-3.
4. *Exit* signs are not required in dayrooms, sleeping rooms or dormitories in occupancies in Group I-3.
5. In occupancies in Groups A-4 and A-5, *exit* signs are not required on the seating side of vomitories or openings into seating areas where *exit* signs are provided in the concourse that are readily apparent from the vomitories. Egress lighting is provided to identify each vomitory or opening within the seating area in an emergency.
6. Exit signs are not required on exterior stairways serving exterior exit balconies.

Interpretation I1011.1: Exit placards are permitted to be used to identify exits in occupancies where exit signs are not required.

***

1011.5 Externally illuminated exit signs. Externally illuminated *exit* signs shall comply with Sections 1011.5.1 through 1011.5.3.

1011.5.1 Graphics. Every *exit* sign, exit placard and directional *exit* sign shall have plainly legible letters not less than 6 inches (152 mm) high with the principal strokes of the letters not less than 3/4 inch (19.1 mm) wide. The word "EXIT" shall have letters having a width not less than 2 inches (51 mm) wide, except the letter "I," and the minimum spacing between letters shall not be less than 3/8 inch (9.5 mm). Signs and placards larger than the minimum established in this section shall have letter widths, strokes and spacing in proportion to their height.

The word "EXIT" shall be in high contrast with the background and shall be clearly discernible when the means of *exit* sign illumination is or is not energized. If a chevron directional indicator is provided as part of the *exit* sign or placard, the construction shall be such that the direction of the chevron directional indicator cannot be readily changed.

Exception: Existing exit signs or placards with letters at least 5 inches (127 mm) in height are permitted to be reused.

1011.5.2 Exit sign illumination. The face of an *exit* sign illuminated from an external source shall have an intensity of not less than 5 foot-candles (54 lux).

1011.5.3 Power source. *Exit* signs shall be illuminated at all times. To ensure continued illumination for a duration of not less than 90 minutes in case of primary power loss, the sign illumination means shall be connected to an emergency power system provided from storage batteries, unit equipment or an on-site generator. The installation of the emergency power system shall be in accordance with Chapter 27 of the *International Building Code*.

Exception: *Approved exit* sign illumination means that provide continuous illumination independent of external power sources for a duration of not less than 90 minutes, in case of primary power loss, are not required to be connected to an emergency ((~~electrical~~)) power system.

1011.6 Not-an-exit warnings. Placards reading "NOT AN EXIT" shall be installed at all doorways, passageways or stairways which are not exits, exit accesses or exit discharges, and which may be mistaken for an exit. A sign indicating the use of the doorway, passageway or stairway, such as "TO BASEMENT", "STORE ROOM", "LINEN CLOSET", is permitted in lieu of the "NOT AN EXIT" sign.

SECTION 1012
HANDRAILS

***

1012.4 Continuity. *Handrail*-gripping surfaces shall be continuous, without interruption by newel posts or other obstructions.

Exceptions:

1. *Handrails* within dwelling units are permitted to be interrupted by a newel post at a turn or landing.
2. Within a dwelling unit, the use of a volute, turnout, starting easing or starting newel is allowed over the lowest tread.
3. *Handrail* brackets or balusters attached to the bottom surface of the *handrail* that do not project horizontally beyond the sides of the *handrail* within 1-1/2 inches (38 mm) of the bottom of the *handrail* shall not be considered obstructions. For each 1/2 inch (12.7 mm) of additional *handrail* perimeter dimension above 4 inches (102 mm), the vertical clearance dimension of 1-1/2 inches (38 mm) shall be permitted to be reduced by 1/8 inch (3 mm).
4. Where *handrails* are provided along walking surfaces with slopes not steeper than 1:20, the bottoms of the *handrail* gripping surfaces shall be permitted to be obstructed along their entire length where they are integral to rash rails or bumper guards.

5. Handrails on stairways that are not part of a required means of egress need not be continuous.

***

1012.6 Handrail extensions. *Handrails* shall return to a wall, *guard* or the walking surface or shall be continuous to the handrail of an adjacent *stair flight* or ramp run. Where *handrails* are not continuous between *flights*, the *handrails* shall extend horizontally at least 12 inches (305 mm) beyond the top riser and continue to slope for the depth of one tread beyond the bottom riser. At *ramps* where *handrails* are not continuous between runs, the *handrails* shall extend horizontally above the landing 12 inches (305 mm) minimum beyond the top and bottom of *ramp* runs. The extensions of *handrails* shall be in the same direction of the *stair flights* at *stairways* and the *ramp* runs at *ramps*.

Exceptions:

1. *Handrails* within a dwelling unit that is not required to be *accessible* need extend only from the top riser to the bottom riser.
2. *Aisle handrails* in Group A and E occupancies in accordance with Section 1028.13.
3. *Handrails* for *alternating tread devices* and ship ladders are permitted to terminate at a location vertically above the top and bottom risers. Handrails for *alternating tread devices* and ship ladders are not required to be continuous between *flights* or to extend beyond the top or bottom risers.
4. Handrail extensions are not required on handrails on stairways that are not part of a required means of egress.

***

SECTION 1014
EXIT ACCESS

***

1014.2 Egress through intervening spaces. Egress through intervening spaces shall comply with this section.

1. Egress from a room or space shall not pass through adjoining or intervening rooms or areas, except where such adjoining rooms or areas and the area served are accessory to one or the other, are not a Group H occupancy and provide a discernible path of egress travel to an *exit*.

Exception: *Means of egress* are not prohibited through adjoining or intervening rooms or spaces in a Group H, S or F occupancy when the adjoining or intervening rooms or spaces are the same or a lesser hazard occupancy group.

2. An *exit access* shall not pass through a room that can be locked to prevent egress.
3. *Means of egress* from dwelling units or sleeping areas shall not lead through other sleeping areas, toilet rooms or bathrooms.
4. Egress shall not pass through kitchens, storage rooms, closets or spaces used for similar purposes.

Exceptions:

1. *Means of egress* are not prohibited through a kitchen area serving adjoining rooms constituting part of the same dwelling unit or sleeping unit.

2. *Means of egress* are not prohibited through stockrooms in Group M occupancies when all of the following are met:

2.1. The stock is of the same hazard classification as that found in the main retail area;

2.2. Not more than 50 percent of the *exit access* is through the stockroom;

2.3. The stockroom is not subject to locking from the egress side; and

2.4. There is a demarcated, minimum 44-inch-wide (1118 mm) *aisle* defined by full- or partial-height fixed walls or similar construction that will maintain the required width and lead directly from the retail area to the *exit* without obstructions.

5. Unless approved by the building official, where two or more exits are required, exit travel shall not pass through an exit enclosure as the only way to reach another exit.

1014.2.1 Multiple tenants. Where more than one tenant occupies any one floor of a building or structure, each tenant space, dwelling unit and sleeping unit shall be provided with access to the required *exits* without passing through adjacent tenant spaces, dwelling units and sleeping units.

Exception: The *means of egress* from a smaller tenant space shall not be prohibited from passing through a larger adjoining tenant space where such rooms or spaces of the smaller tenant occupy less than 10 percent of the area of the larger tenant space through which they pass; are the same or similar occupancy group; a discernable path of egress travel to an *exit* is provided; and the *means of egress* into the adjoining space is not subject to locking from the egress side. A required *means of egress* serving the larger tenant space shall not pass through the smaller tenant space or spaces.

[W] 1014.2.2 Group I-2. Habitable spaces and suites in Group I-2 occupancies are permitted to comply with this Section 1014.2.2.

1014.2.2.1 Exit access doors. Habitable ((~~rooms or~~)) spaces and *suites* in Group I-2 occupancies shall have an *exit access* door leading directly to a *corridor*.

Exception: Rooms with *exit* doors opening directly to the outside at ground level.

1014.2.2.2 Exit access through suites. Exit access from areas not classified as a Group I-2 occupancy suite shall not pass through a suite. In a suite required to have more than one exit, one exit access may pass through an adjacent suite if all other requirements of Section 1014.2 are satisfied.

1014.2.2.3 Separation. Suites in Group I-2 occupancies shall be separated from other portions of the building by a smoke partition complying with Section 711 of the *Seattle Building Code*. Partitions within suites are not required to be smoke-resistant or fire-resistance-rated unless required by another section of this code.

((~~1014.2.3~~)) 1014.2.2.4 Suites ((~~in~~)) containing patient sleeping areas. Patient sleeping areas in Group I-2 occupancies shall be permitted to be divided into *suites* with one intervening room if one of the following conditions is met:
1. The intervening room within the *suite* is not used as an *exit access* for more than eight patient beds.
2. The arrangement of the *suite* allows for direct and constant visual supervision by nursing personnel.

((~~1014.2.3.1~~)) 1014.2.2.4.1 Area. *Suites* of sleeping rooms shall not exceed 5,000 square feet (465 m2).

((~~1014.2.3.2~~)) 1014.2.2.4.2 Exit access. Any patient sleeping room, or any *suite* that includes patient sleeping rooms, of more than 1,000 square feet (93 m2) shall have at least two *exit access* doors ((~~remotely~~)) located ((~~from each other~~)) in accordance with Section 1015.2.

((~~1014.2.3.3~~)) 1014.2.2.4.3 Travel distance. The travel distance between any point in a *suite* of sleeping rooms and an *exit access* door of that *suite* shall not exceed 100 feet (30 480 mm). The travel distance between any point in a Group I-2 occupancy patient sleeping room and an exit access door in that room shall not exceed 50 feet (15,240 mm).

((~~1014.2.4~~)) 1014.2.2.5 Suites ((~~in areas other than~~)) not containing patient sleeping areas. Areas other than patient sleeping areas in Group I-2 occupancies shall be permitted to be divided into *suites* that comply with Sections 1014.2.2.5.1 through 1014.2.2.5.4.

((~~1014.2.4.1~~)) 1014.2.2.5.1 Area. *Suites* of rooms, other than patient sleeping rooms, shall not exceed 10,000 square feet (929 m2).

((~~1014.2.4.2~~)) 1014.2.2.5.2 Exit access. Any room or *suite* of rooms, other than patient sleeping rooms, of more than 2,500 square feet (232 m2) shall have at least two *exit access* doors ((~~remotely~~)) located ((~~from each other~~)) in accordance with Section 1015.2.

((~~1014.2.4.3~~)) 1014.2.2.5.3 One intervening room. For rooms other than patient sleeping rooms, *suites* of rooms are permitted to have one intervening room if the travel distance within the *suite* to the *exit access* door is not greater than 100 feet (30 480 mm).

((~~1014.2.4.4~~)) 1014.2.2.5.4 Two intervening rooms. For rooms other than patient sleeping rooms located within a *suite*, *exit access* travel from within the *suite* shall be permitted through two intervening rooms where the travel distance to the *exit access* door is not greater than 50 feet (15 240 mm).

((~~**1014.2.5 Exit access through suites.** *Exit access* from all other portions of a building not classified as a *suite* in a Group I-2 occupancy shall not pass through a *suite*.~~
~~**1014.2.6 Travel distance.** The travel distance between any point in a Group I-2 occupancy patient sleeping room and an *exit access* door in that room shall not exceed 50 feet (15 240 mm).~~
~~**1014.2.7 Separation.** *Suites* in Group I-2 occupancies shall be separated from other portions of the building by a *smoke partition* complying with Section 711.~~))

1014.3 Common path of egress travel. In occupancies other than Groups H-1, H-2 and H-3, the *common path of egress travel* shall not exceed 75 feet (22 860 mm). In Group H-1, H-2 and H-3 occupancies, the *common path of egress travel* shall not exceed 25 feet (7620 mm). For *common path of egress travel* in Group A occupancies and assembly occupancies accessory to Group E occupancies having fixed seating, see Section 1028.8.

Exceptions:

1. The length of a *common path of egress travel* in Group B, F and S occupancies shall not be more than 100 feet (30 480 mm), provided that the building is equipped throughout with an *automatic sprinkler system* installed in accordance with Section 903.3.1.1.
2. Where a tenant space in Group B, S and U occupancies has an *occupant load* of not more than 30, the length of a *common path of egress travel* shall not be more than 100 feet (30 480 mm).
3. The length of a *common path of egress travel* in a Group I-3 occupancy shall not be more than 100 feet (30 480 mm).
4. The length of a common path of egress travel in a Group R-2 <u>or R-3</u> occupancy shall not be more than 125 feet (38 100 mm), provided that the building is protected throughout with an *approved automatic sprinkler system* in accordance with Section 903.3.1.1 or 903.3.1.2.

SECTION 1015
EXIT AND EXIT ACCESS DOORWAYS

1015.1 Exits or exit access doorways from spaces. Two *exits* or *exit access doorways* from any space shall be provided where one of the following conditions exists:

Exception: Group I-2 occupancies shall comply with Section 1014.2.2 through 1014.2.7.

1. The *occupant load* of the space exceeds one of the values in Table 1015.1.
   Exception: In Group R-2 and R-3 occupancies, one *means of egress* is permitted within and from individual dwelling units with a maximum *occupant load* of 20 where the dwelling unit is equipped throughout with an *automatic sprinkler system* in accordance with Section 903.3.1.1 or 903.3.1.2.
2. The *common path of egress travel* exceeds one of the limitations of Section 1014.3.
3. Where required by Section 1015.3, 1015.4, 1015.5, 1015.6 or 1015.6.1.

Where a building contains mixed occupancies, each individual occupancy shall comply with the applicable requirements for that occupancy. Where applicable, cumulative *occupant loads* from adjacent occupancies shall be considered in accordance with the provisions of Section 1004.1.

Note: See Section 1008.1.9.3 for conditions in which exit access doors from elevator lobbies are permitted to be locked.

1015.1.1 Three or more exits or exit access doorways. Three *exits* or *exit access doorways* shall be provided from any space with an *occupant load* of 501 to 1,000. Four *exits* or *exit access doorways* shall be provided from any space with an *occupant load* greater than 1,000.

TABLE 1015.1
SPACES WITH ONE EXIT OR EXIT ACCESS DOORWAY

OCCUPANCY	MAXIMUM OCCUPANT LOAD
A, B, E[a], F, M, U	49
H-1, H-2, H-3	3
H-4, H-5, I-1, I-3, I-4, R	10
S	29

a. Day care maximum occupant load is 10.

1015.2 Exit or exit access doorway arrangement. Required *exits* shall be located in a manner that makes their availability obvious. *Exits* shall be unobstructed at all times. *Exit* and *exit access doorways* shall be arranged in accordance with Sections 1015.2.1 and 1015.2.2.

1015.2.1 Two exits or exit access doorways. Where two *exits* or *exit access doorways* are required from any portion of the *exit access*, the *exit* doors or *exit access doorways* shall be placed a distance apart equal to not less than one-half of the length of the maximum overall diagonal dimension of the building or area to be served measured in a straight line between *exit* doors or *exit access doorways*. Interlocking or *scissor stairs* and stairways that share a wall with other exit enclosures shall be counted as one *exit stairway*.

Exceptions:

1. Where *exit enclosures* are provided as a portion of the required *exit* and are interconnected by a 1-hour fire-resistance-rated *corridor* conforming to the requirements of Section 1018, the required *exit* separation shall be measured along the shortest direct line of travel within the *corridor*.

Interpretation I1015.2: Exception 1 applies only where corridors have a one-hour fire-resistance-rating even where Section 1018 would allow non-rated corridors.

2. Where a building is equipped throughout with an *automatic sprinkler system* in accordance with Section 903.3.1.1 or 903.3.1.2, the separation distance of the *exit* doors or *exit access doorways* shall not be less than one-third of the length of the maximum overall diagonal dimension of the area served.

3.Where it is not practical to separate exits by one-half the diagonal dimension, exits from retail and office tenant spaces in Group B and M occupancies and within dwelling units shall be as far apart as reasonably practicable as determined by the building official.

1015.2.2 Three or more exits or exit access doorways. Where access to three or more *exits* is required, at least two *exit* doors or *exit access doorways* shall be arranged in accordance with the provisions of Section 1015.2.1.

***

SECTION 1016
EXIT ACCESS TRAVEL DISTANCE

1016.1 Travel distance limitations. *Exits* shall be so located on each *story* such that the maximum length of *exit access* travel, measured from the most remote point within a *story* along the natural and unobstructed path of egress travel to an *exterior exit* door at the *level of exit discharge*, an entrance to a vertical *exit enclosure*, an *exit passageway*, a *horizontal exit*, an *exterior exit stairway* or an exterior *exit ramp*, shall not exceed the distances given in Table 1016.1.

Exceptions:

1. Travel distance in *open parking garages* is permitted to be measured to the closest riser of open *exit stairways*.
2. In outdoor facilities with open *exit access* components and open *exterior exit stairways* or *exit ramps*, travel distance is permitted to be measured to the closest riser of an *exit stairway* or the closest slope of the *exit ramp*.
3. In other than occupancy Groups H and I, the *exit access* travel distance to a maximum of 50 percent of the *exits* is permitted to be measured from the most remote point within a building to an *exit* using unenclosed *exit access stairways* or *ramps* when connecting a maximum of two stories. The two connected stories shall be provided with at least two *means of egress*. Such interconnected stories shall not be open to other stories.
4. In other than occupancy Groups H and I, *exit access* travel distance is permitted to be measured from the most remote point within a building to an *exit* using unenclosed *exit access stairways* or *ramps* in the first and second stories above *grade plane* in buildings equipped throughout with an *automatic sprinkler system* in accordance with Section 903.3.1.1. The first and second stories above *grade plane* shall be provided with at least two *means of egress*. Such interconnected stories shall not be open to other stories.

Where applicable, travel distance on unenclosed *exit access stairways* or *ramps* and on connecting stories shall also be included in the travel distance measurement. The measurement along *stairways* shall be made on a plane parallel and tangent to the *stair* tread *nosings* in the center of the *stairway*.

Note: Additional exit enclosures or corridors constructed as smoke barriers may be required for standpipe hose connections. See Section 905.4.

TABLE 1016.1
EXIT ACCESS TRAVEL DISTANCE[a]

OCCUPANCY	WITHOUT SPRINKLER SYSTEM (feet)	WITH SPRINKLER SYSTEM (feet)
A, E, F-1, M, R, S-1	200	250[b]
I-1	Not Permitted	250[c]
B	200	300[c]
F-2, S-2, U	300	400[c]
H-1	Not Permitted	75[c]
H-2	Not Permitted	100[c]
H-3	Not Permitted	150[c]
H-4	Not Permitted	175[c]
H-5	Not Permitted	200[c]
I-2, I-3, I-4	Not Permitted	200[c]

For SI: 1 foot = 304.8 mm.
a. See the following sections for modifications to exit access travel distance requirements:
Section 402.4 of the *International Building Code*: For the distance limitation in malls.
Section 404.9 of the *International Building Code*: For the distance limitation through an atrium space.
Section 407.4 of the *International Building Code*: For the distance limitation in Group I-2.
Sections 408.6.1 and 408.8.1 of the *International Building Code*: For the distance limitations in Group I-3.
Section 411.4 of the *International Building Code*: For the distance limitation in special amusement buildings.
Section 1014.2.2: For the distance limitation in Group I-2 hospital suites.
Section 1015.4: For the distance limitation in refrigeration machinery rooms.
Section 1015.5: For the distance limitation in refrigerated rooms and spaces.
Section 1021.2: For buildings with one exit.
Section 1028.7: For increased limitation in assembly seating.
Section 1028.7: For increased limitation for assembly open-air seating.
((~~Section 3103.4: For temporary structures.~~))

Section 3104.9 of the *International Building Code*: For pedestrian walkways.
b. Buildings equipped throughout with an automatic sprinkler system in accordance with Section 903.3.1.1 or 903.3.1.2. See Section 903 for occupancies where automatic sprinkler systems are permitted in accordance with Section 903.3.1.2.
c. Buildings equipped throughout with an automatic sprinkler system in accordance with Section 903.3.1.1.

***

SECTION 1018
CORRIDORS

1018.1 Construction. *Corridors* shall be fire-resistance rated in accordance with Table 1018.1. The *corridor* walls required to be fire-resistance rated shall comply with Section 709 of the *International Building Code* for *fire partitions*.

Exceptions:

1. A *fire-resistance rating* is not required for *corridors* in an occupancy in Group E where each room that is used for instruction has at least one door opening directly to the exterior and rooms for assembly purposes have at least one-half of the required *means of egress* doors opening directly to the exterior. Exterior doors specified in this exception are required to be at ground level.
2. A *fire-resistance rating* is not required for *corridors* contained within a dwelling or sleeping unit in an occupancy in Group R.
3. A *fire-resistance rating* is not required for *corridors* in *open parking garages*.
4. A *fire-resistance rating* is not required for *corridors* in an occupancy in Group B which is a space requiring only a single *means of egress* complying with Section 1015.1.
5. In office areas located in buildings of Types IA or IB construction, corridor walls need not be of fire-resistance-rated construction where the corridor side of the corridor walls is finished with materials having a maximum Class B rating as defined in Chapter 8 of the *Seattle Building Code*. This exception does not apply to outpatient clinics and medical offices.
6. The occupant load of Group B conference rooms, lunch rooms without grease-producing cooking and other assembly rooms with an occupant load of less than 50 in each room need not be considered when determining whether corridor construction is required, provided such rooms are accessory to an office tenant located in a building of Type IA or IB construction. This provision is permitted to be used in other construction types when the floor on which the assembly room is located is equipped with an automatic sprinkler system.

TABLE 1018.1
CORRIDOR FIRE-RESISTANCE RATING

		REQUIRED FIRE-RESISTANCE RATING (hours)

OCCUPANCY	OCCUPANT LOAD SERVED BY CORRIDOR	Without sprinkler system	With sprinkler system[c]
H-1, H-2, H-3	All	Not Permitted	1
H-4, H-5	Greater than 30	Not Permitted	1
A, B, E, F, M, S, U	Greater than 30	1	0
R	((~~Greater than 10~~)) All	Not Permitted	((~~0.5~~)) 1
I-2[a], I-4	All	Not Permitted	0
I-1, I-3	All	Not Permitted	1[b]

a. For requirements for occupancies in Group I-2, see Section 407.3 of the *International Building Code*.
b. For a reduction in the fire-resistance rating for occupancies in Group I-3, see Section 408.7 of the *International Building Code*.
c. Buildings equipped throughout with an automatic sprinkler system in accordance with Section 903.3.1.1 or 903.3.1.2 where allowed.

***

1018.4 Dead ends. Where more than one *exit* or *exit access doorway* is required, the *exit access* shall be arranged such that there are no dead ends in *corridors* more than ((~~20 feet (6096 mm) in length.~~)) 25 feet (7620 mm) in length.

Exceptions:

1. In occupancies in Group I-3 of Occupancy Condition 2, 3 or 4 (see Section 308.4), the dead end in a *corridor* shall not exceed 50 feet (15 240 mm).
2. In occupancies in Groups B, E, F, I-1, M, R-1, R-2, ((~~R-4,~~)) S and U, where the building is equipped throughout with an *automatic sprinkler system* in accordance with Section 903.3.1.1, the length of the dead-end *corridors* shall not exceed 50 feet (15 240 mm).
3. A dead-end *corridor* shall not be limited in length where the length of the dead-end *corridor* is less than 2.5 times the least width of the dead-end *corridor*.
4. Dead ends are permitted to be 75 feet (22 860 mm) in length in areas containing Group B offices in buildings of Types IA and IB construction, where the cumulative occupant load does not exceed 50 for all areas for which the dead end serves as the only means of egress.

1018.5 Air movement in corridors. *Corridors* shall not serve as supply, return, exhaust, relief or ventilation air ducts or plenums except as allowed by *Seattle Mechanical Code* Section 601.2.
((~~Exceptions:~~
~~1. Use of a *corridor* as a source of makeup air for exhaust systems in rooms that open directly onto such *corridors*, including toilet rooms, bathrooms, dressing rooms, smoking lounges and~~

~~janitor closets, shall be permitted, provided that each such *corridor* is directly supplied with outdoor air at a rate greater than the rate of makeup air taken from the *corridor*.~~
~~2. Where located within a dwelling unit, the use of *corridors* for conveying return air shall not be prohibited.~~
~~3. Where located within tenant spaces of 1,000 square feet (93 m2) or less in area, utilization of *corridors* for conveying return air is permitted.~~
~~4. Incidental air movement from pressurized rooms within health care facilities, provided that the *corridor* is not the primary source of supply or return to the room.~~))

1018.5.1 Corridor ceiling. Use of the space between the *corridor* ceiling and the floor or roof structure above as a return air plenum is permitted for one or more of the following conditions:
1. The *corridor* is not required to be of fire-resistance-rated construction;
2. The *corridor* is separated from the plenum by fire-resistance-rated construction;
3. The air-handling system serving the *corridor* is shut down upon activation of the air-handling unit *smoke detectors* required by the *International Mechanical Code*;
4. The air-handling system serving the *corridor* is shut down upon detection of sprinkler waterflow where the building is equipped throughout with an *automatic sprinkler system*; or
5. The space between the *corridor* ceiling and the floor or roof structure above the *corridor* is used as a component of an *approved* engineered smoke control system.

1018.6 Corridor continuity. Fire-resistance-rated corridors shall be continuous from the point of entry to an *exit*, and shall not be interrupted by intervening rooms.

Exceptions:

1. Foyers, lobbies or reception rooms constructed as required for *corridors* shall not be construed as intervening rooms.

[W] 2. In Group R-2 boarding homes and residential treatment facilities licensed by Washington state, seating areas shall be allowed to be open to the corridor provided:

2.1 The seating area is constructed as required for the corridor;

2.2 The floor is separated into at least two compartments complying with Section 407.4;

2.3 Each individual seating area does not exceed 150 square feet (13.9 m^2), excluding the corridor width;

2.4 The combined total space of seating areas per compartment does not exceed 300 square feet, excluding the corridor width;

2.5 Combustible furnishings located within the seating area shall be in accordance with Section 805; and

2.6 Emergency means of egress lighting is provided as required by Section 1006 to illuminate the area.

SECTION 1019
EGRESS BALCONIES
****

1019.2 Wall separation. Exterior egress balconies shall be separated from the interior of the building by walls and opening protectives as required for *corridors*.

Exceptions:

1. Separation is not required where the exterior egress balcony is served by at least two *stairs* and a dead-end travel condition does not require travel past an unprotected opening to reach a *stair*.
2. Separation is not required in buildings equipped throughout with an automatic sprinkler system in accordance with Section 903.3.1.1 or 903.3.1.2.

***

SECTION 1020
EXITS

***

1020.2 Exterior exit doors. Buildings or structures used for human occupancy shall have at least one exterior door that meets the requirements of Section 1008.1.1, Section 1008.1.2 and Section 1008.1.3.

1020.2.1 Detailed requirements. Exterior *exit* doors shall comply with the applicable requirements of Section 1008.1.

1020.2.2 Arrangement. Exterior *exit* doors shall lead directly to the *exit discharge* or the *public way*.

SECTION 1021
NUMBER OF EXITS AND CONTINUITY

1021.1 Exits from stories. All spaces within each *story* shall have access to the minimum number of ((~~*approved* independent~~)) *exits* as specified in Table 1021.1 based on the *occupant load* of the *story*. For the purposes of this chapter, occupied roofs shall be provided with *exits* as required for stories.

Exceptions:

1. As modified by Section 403.5.2 of the *International Building Code*.
2. As modified by Section 1021.2.
3. *Exit access stairways* and *ramps* that comply with Exception 3 or 4 of Section 1016.1 shall be permitted to provide the minimum number of *approved* independent *exits* required by Table 1021.1 on each *story*.
4. In Group R-2 and R-3 occupancies, one *means of egress* is permitted within and from individual dwelling units with a maximum *occupant load* of 20 where the dwelling unit is equipped throughout with an *automatic sprinkler system* in accordance with Section 903.3.1.1 or 903.3.1.2.

5. Within a *story*, rooms and spaces complying with Section 1015.1 with *exits* that discharge directly to the exterior at the *level of exit discharge*, are permitted to have one *exit*.

1021.1.1 Exits maintained. The required number of *exits* from any *story*, including basements, shall be maintained until arrival at grade or the *public way*.

1021.1.2 Parking structures. Parking structures shall not have less than two *exits* from each parking tier, except that only one *exit* is required where vehicles are mechanically parked. Vehicle ramps shall not be considered as required *exits* unless pedestrian facilities are provided.

1021.1.3 Helistops. The *means of egress* from helistops shall comply with the provisions of this chapter, provided that landing areas located on buildings or structures shall have two or more *exits*. For landing platforms or roof areas
less than 60 feet (18 288 mm) long, or less than 2,000 square feet (186 m2) in area, the second *means of egress* is permitted to be a fire escape, *alternating tread device* or ladder leading to the floor below.

TABLE 1021.1
MINIMUM NUMBER OF EXITS FOR OCCUPANT LOAD

OCCUPANT LOAD (persons per story)	MINIMUM NUMBER OF EXITS (per story)
1-500	2
501-1,000	3
More than 1,000	4

1021.2 Single exits. ((~~Only one *exit* shall be required from Group R-3 occupancy buildings or from stories of other buildings as indicated in Table 1021.2.~~)) Occupancies shall be permitted to have a single *exit* in buildings otherwise required to have more than one *exit* if the areas served by the single *exit* do not exceed the limitations of Table 1021.2 or Section 1021.2.1. ((~~Mixed occupancies shall be permitted to be served by single *exits* provided each individual occupancy complies with the applicable requirements of Table 1021.2 for that occupancy. Where applicable, cumulative *occupant loads* from adjacent occupancies shall be considered in accordance with the provisions of Section 1004.1.~~)) Basements with a single *exit* shall not be located more than one *story* below *grade plane*.

Mixed occupancies shall be permitted to be served by single exits provided each individual occupancy complies with the applicable requirements of Table 1021.2 for that occupancy. Where occupants from accessory spaces egress through a primary space, the occupant load of the primary space shall be calculated in accordance with Section 1004.1. In each story of a mixed occupancy building, the maximum number of occupants served by a single exit shall be such that

the sum of the ratios of the calculated number of occupants of the space divided by the allowable number of occupants for each occupancy shall not exceed one.

1021.2.1 Single exits allowed. Only one *exit* is required from the following:

1. Group R-3 occupancy buildings are permitted to have one exit.
2. Occupied roofs with an occupant load of 10 or less are permitted to have one exit.
3. Not more than 5 stories of Group R-2 occupancy are permitted to be served by a single exit under the following conditions:

3.1 The building has not more than 6 stories above grade plane.

3.2 The building does not contain a boarding house.

3.3 There shall be no more than four dwelling units on any floor.

3.4 The building shall be of not less than one-hour fire-resistive construction and shall also be equipped throughout with an automatic sprinkler system in accordance with Section 903.3.1.1. Residential-type sprinkler heads shall be used in all habitable spaces in each dwelling unit.

3.5 There shall be no more than two single exit stairway conditions on the same property.

3.6 An exterior stairway or exit enclosure shall be provided. The exit enclosure, including any related exit passageway, shall be pressurized in accordance with Section 909.21. Doors in the exit enclosure shall swing into the exit enclosure regardless of the occupant load served, provided that doors from the exit enclosure to the building exterior are permitted to swing in the direction of exit travel.

3.7 A corridor shall separate each dwelling unit entry/exit door from the door to an exit enclosure, including any related exit passageway, on each floor. Dwelling unit doors shall not open directly into an enclosed stairway. Dwelling unit doors are permitted to open directly into an exterior stairway.

3.8 There shall be no more than 20 feet (6096 mm) of travel to the exit stairway from the entry/exit door of any dwelling unit.

3.9 Travel distance measured in accordance with Section 1016.1 shall not exceed 125 feet.

3.10 The exit shall not terminate in an exit court where the court depth exceeds the court width unless it is possible to exit in either direction to the public way.

3.11 Elevators shall be pressurized in accordance with Section 708.14.2 of the *Seattle Building Code* or shall open into elevator lobbies. Elevator lobbies shall be separated from the remainder of the building and from the exit stairway with fire partitions. Doors shall be automatic closing actuated by smoke detector. Where approved by the building official, natural ventilation is permitted to be substituted for pressurization where the ventilation would prevent the accumulation of smoke or toxic gases.

3.12 Other occupancies are permitted in the same building provided they comply with all the requirements of this code. Other occupancies shall not communicate with the Group R occupancy portion of the building or with the single-exit stairway.

Exception: Parking garages accessory to the Group R occupancy are permitted to communicate with the exit stairway.

3.13 The exit serving the Group R occupancy shall not discharge through any other occupancy, including an accessory parking garage.
3.14 There shall be no openings within 10 feet (3048 mm) of unprotected openings into the stairway other than required exit doors having a one-hour fire-resistance rating.

TABLE 1021.2
STORIES WITH ONE EXIT

STORY	OCCUPANCY	MAXIMUM OCCUPANTS (OR DWELLING UNITS) PER FLOOR AND TRAVEL DISTANCE
First story or basement	A, B[d], E[e], F[d], M, U, S[d]	49 occupants and 75 feet travel distance
	H-2, H-3	3 occupants and 25 feet travel distance
	H-4, H-5, I, R	10 occupants and 75 feet travel distance
	S[a]	29 occupants and 100 feet travel distance
Second story	B[b], F, M, Sa	29 occupants and 75 feet travel distance
	R-2	4 dwelling units and 50 feet travel distance
Third story	R-2[c]	4 dwelling units and 50 feet travel distance

For SI: 1 foot = 304.8 mm.
a. For the required number of exits for parking structures, see Section 1021.1.2.
b. For the required number of exits for air traffic control towers, see Section 412.3 of the *International Building Code*.
c. Buildings classified as Group R-2 equipped throughout with an automatic sprinkler system in accordance with Section 903.3.1.1 or 903.3.1.2 and provided with emergency escape and rescue openings in accordance with Section 1029.
d. Group B, F and S occupancies in buildings equipped throughout with an automatic sprinkler system in accordance with Section 903.3.1.1 shall have a maximum travel distance of 100 feet.
e. Day care occupancies shall have a maximum occupant load of 10.

***

SECTION 1022
EXIT ENCLOSURES

1022.1 Enclosures required. *Interior exit stairways* and interior *exit ramps* shall be enclosed with *fire barriers* constructed in accordance with Section 707 of the *International Building Code* or *horizontal assemblies* constructed in accordance with Section 712 of the *International Building Code*, or both. *Exit enclosures* shall have a *fire-resistance rating* of not less than 2 hours where connecting more than four stories ((~~or more~~)) and not less than 1 hour where connecting ((~~less than~~)) four stories and less. The number of stories connected by the *exit*

enclosure shall include any basements but not any *mezzanines*. *Exit enclosures* shall have a *fire-resistance rating* not less than the floor assembly penetrated, but need not exceed 2 hours. *Exit enclosures* shall lead directly to the exterior of the building or shall be extended to the exterior of the building with an *exit passageway* conforming to the requirements of Section 1023, except as permitted in Section 1027.1. An *exit enclosure* shall not be used for any purpose other than *means of egress*, circulation and access.

Exceptions:

1. In all occupancies, other than Group H and I occupancies, a *stairway* is not required to be enclosed when the *stairway* serves an *occupant load* of less than 10 and the *stairway* complies with either Item 1.1 or 1.2. In all cases, the maximum number of connecting open stories shall not exceed two.
    - 1.1. The *stairway* is open to not more than one *story* above its *level of exit discharge*; or
    - 1.2. The *stairway* is open to not more than one *story* below its *level of exit discharge*.
2. *Exits* in buildings of Group A-5 where all portions of the *means of egress* are essentially open to the outside need not be enclosed.
3. *Stairways* serving and contained within a single residential dwelling unit or sleeping unit in Group R-1, R-2 or R-3 occupancies are not required to be enclosed.
4. *Stairways* in open parking structures that serve only the parking structure are not required to be enclosed.
5. *Stairways* in Group I-3 occupancies, as provided for in Section 408.3.8 of the *International Building Code*, are not required to be enclosed.
6. *Means of egress stairways* as required by Sections 410.5.3 of the *International Building Code* and 1015.6.1 are not required to be enclosed.
7. *Means of egress stairways* from balconies, galleries or press boxes as provided for in Section 1028.5.1 are not required to be enclosed.

1022.2 Termination. *Exit enclosures* shall terminate at an *exit discharge* or a *public way*.

Exception: An *exit enclosure* shall be permitted to terminate at an *exit passageway* complying with Section 1023, provided the *exit passageway* terminates at an *exit discharge* or a *public way*.

1022.2.1 Extension. Where an *exit enclosure* is extended to an *exit discharge* or a *public way* by an *exit passageway*, the *exit enclosure* shall be separated from the *exit passageway* by a *fire barrier* constructed in accordance with Section 707 of the *International Building Code* or a *horizontal assembly* constructed in accordance with Section 712 of the *International Building Code*, or both. The *fire-resistance rating* shall be at least equal to that required for the *exit enclosure*. A *fire door assembly* complying with Section 715.4 of the *International Building Code* shall be installed in the *fire barrier* to provide a *means of egress* from the *exit enclosure* to

the *exit passageway*. Openings in the *fire barrier* other than the *fire door assembly* are prohibited. Penetrations of the *fire barrier* are prohibited.

Exceptions:

1. Penetrations of the *fire barrier* in accordance with Section 1022.4 shall be permitted.
2. A fire barrier and fire door assembly are not required to separate an exit passageway from a pressurized stairway.

1022.3 Openings ((~~and penetrations~~)). *Exit enclosure* opening protectives shall be in accordance with the requirements of Section 715 of the *International Building Code*.

Openings in *exit enclosures* other than unprotected exterior openings shall be limited to those necessary for *exit access* to the enclosure from normally occupied spaces and for egress from the enclosure.

Elevators shall not open into an *exit enclosure*.

Interpretation I1022.3: Accessory rooms such as restrooms, storage closets, laundry rooms, electrical, communication closets and similar spaces shall not open into an exit enclosure.

1022.4 Penetrations. Penetrations into and openings through an *exit enclosure* are prohibited except for the following:

1. required *exit* doors,
2. equipment and ductwork necessary for independent ventilation or pressurization,
3. sprinkler piping, standpipes,
4. electrical raceway for fire department communication systems and sprinkler monitoring terminating at a steel box not exceeding 16 square inches (0.010 m2),
5. electrical raceway serving the *exit enclosure* and terminating at a steel box not exceeding 16 square inches (0.010 m2)
6. piping used exclusively for the drainage of rainfall runoff from roof areas, provided the roof is not used for a helistop or heliport.
7. Unfired unit heaters required for freeze protection of fire protection equipment are permitted to penetrate one membrane; the conduit serving the heater is permitted to penetrate both membranes.
8. Equipment necessary for electrically-controlled stairway door locks and security cameras are permitted to penetrate one membrane; the conduit serving the equipment is permitted to penetrate both membranes.

Such penetrations shall be protected in accordance with Section 713 of the *International Building Code*. There shall be no penetrations or communication openings, whether protected or not, between adjacent *exit enclosures*.

Interpretation I1022.4: Ducts passing through exit enclosures shall be separated from the enclosure by construction having a fire-resistance rating at least equal to the exit enclosure walls. At least one side of the duct enclosure shall about the exit enclosure.

***

1022.8 Floor identification signs. A sign shall be provided at each floor landing in *exit enclosures* connecting more than three stories designating the floor level, the terminus of the top and bottom of the *exit enclosure* and the identification of the *stair* or *ramp*. The signage shall also state the *story* of, and the direction to, the *exit discharge*, ((~~and the availability of~~)) whether there is roof access from the enclosure for the fire department, and whether the roof access is accessed by roof hatch. The sign shall be located 5 feet (1524 mm) above the floor landing in a position that is readily visible when the doors are in the open and closed positions. Floor level identification signs in tactile characters complying with ICC A117.1 shall be located at each floor level landing adjacent to the door leading from the enclosure into the corridor to identify the floor level.

1022.8.1 Signage requirements. *Stairway* identification signs shall comply with all of the following requirements:
1. The signs shall be a minimum size of 18 inches (457 mm) by 12 inches (305 mm).
2. The letters designating the identification of the stair enclosure shall be a minimum of 11/2 inches (38 mm) in height.
3. The number designating the floor level shall be a minimum of 5 inches (127 mm) in height and located in the center of the sign.
4. All other lettering and numbers shall be a minimum of 1 inch (25 mm) in height.
5. Characters and their background shall have a nonglare finish. Characters shall contrast with their background, with either light characters on a dark background or dark characters on a light background.
6. When signs required by Section 1022.8 are installed in interior *exit enclosures* of buildings subject to Section 1024, the signs shall be made of the same materials as required by Section 1024.4.

1022.9 ((~~Smokeproof enclosures and p~~))Pressurized stairways. ((~~In buildings~~)) Where required by Sections 403.5.4 or 405.7.2 of the *Seattle Building Code*, ((~~to comply with Section 403 or 405, each of the~~)) *exit enclosures* ((~~serving a *story* with a floor surface located more than 75 feet (22 860 mm) above the lowest level of fire department vehicle access or more than 30 feet (9144 mm) below the finished floor of a *level of exit discharge* serving such stories~~)) shall be ((~~*smokeproof enclosure* or~~)) pressurized *stairways* in accordance with Section 909.20.

1022.9.1 Termination and extension. A ((~~*smokeproof enclosure* or~~)) pressurized *stairway* shall terminate at an *exit discharge* or a *public way*. The ((~~*smokeproof enclosure* or~~))-pressurized

stairway shall be permitted to be extended by an *exit passageway* in accordance with Section 1022.2. The *exit passageway* shall be without openings other than ((~~the *fire door assembly* required by Section 1022.2 and~~)) those necessary for egress from the *exit passageway*. The *exit passageway* shall be separated from the remainder of the building by 2-hour *fire barriers* constructed in accordance with Section 707 of the *International Building Code* or *horizontal assemblies* constructed in accordance with Section 712 of the *International Building Code*, or both. The exit passageway shall be protected and pressurized in the same manner as the pressurized stairway.

Exception((~~s~~)):

((~~1. Openings in the *exit passageway* serving a *smokeproof enclosure* are permitted where the *exit passageway* is protected and pressurized in the same manner as the *smokeproof enclosure*, and openings are protected as required for access from other floors.~~

~~2. Openings in the *exit passageway* serving a pressurized *stairway* are permitted where the *exit passageway* is protected and pressurized in the same manner as the pressurized *stairway*.~~

~~3 The *fire barrier* separating the *smokeproof enclosure* or pressurized *stairway* from the *exit passageway* is not required, provided the *exit passageway* is protected and pressurized in the same manner as the *smokeproof enclosure* or pressurized *stairway*.~~

~~4~~)) A ((~~*smokeproof enclosure* or~~)) pressurized *stairway* shall be permitted to egress through areas on the level of discharge or vestibules as permitted by Section 1027.

((~~**1022.9.2 Enclosure access.** Access to the *stairway* within a *smokeproof enclosure* shall be by way of a vestibule or an open exterior balcony.~~

~~**Exception:** Access is not required by way of a vestibule or exterior balcony for *stairways* using the pressurization alternative complying with Section 909.20.5.~~))

1022.10 Equipment in exit enclosures. Equipment is prohibited in exit enclosures except for equipment necessary for independent pressurization, lighting of the exit enclosure, sprinkler piping, standpipes, electrical equipment for fire department communication and sprinkler monitoring, and unit heaters required to protect fire protection equipment from freezing.

SECTION 1023
EXIT PASSAGEWAYS

1023.1 Exit passageway. *Exit passageways* serving as an *exit* component in a *means of egress* system shall comply with the requirements of this section. An *exit passageway* shall not be used for any purpose other than as a *means of egress*, circulation and access.

***

1023.5 Openings and penetrations. *Exit passageway* opening protectives shall be in accordance with the requirements of Section 715 of the *International Building Code*.

Except as permitted in Section 402.4.6 of the *International Building Code*, openings in *exit passageways* other than exterior openings shall be limited to those necessary for *exit access* to the *exit passageway* from normally occupied spaces and for egress from the *exit passageway*.

Where an *exit enclosure* is extended to an *exit discharge* or a *public way* by an *exit passageway*, the *exit passageway* shall also comply with Section 1022.2.1.

Elevators shall not open into an *exit passageway*.

Interpretation I1023.5: Accessory rooms such as restrooms, storage closets, laundry rooms, electrical, communication closets and similar spaces shall not open into exit passageways.

Code Alternate CA1023.5: An elevator is permitted to open into an exit passageway when the following conditions are met:
1. A lobby shall separate the elevator from the exit passageway. This is allowed at only one location in the building. The lobby is required whether the elevator hoistway is pressurized or not.
2. The separation shall be constructed as a fire barrier having a fire-resistive rating and opening protectives as for the exit passageway. The door between the lobby and the exit passageway shall also comply with Section 715.4.3. The door shall have listed gaskets installed at head, jambs and meeting edges. This only applies to the walls common with the exit passageway.
3. The lobby shall have a minimum depth of 36 inches. (Note that areas of refuge may require a larger dimension).
4. An elevator lobby constructed as a smoke partition shall be provided at every floor below the level of the exit passageway served by the elevator. Hoistway pressurization is permitted to be used in lieu of the lobbies on floors below the level of the exit passageway.
5. A door as required by Section 1022.2.1 between an exit enclosure and the exit passageway shall be provided.
6. An automatic sprinkler system in accordance with Section 903.3.1.1 shall be provided throughout the floor on which the exit passageway is located.

This alternate does not apply to vertical exit enclosures.

1023.6 Penetrations. Penetrations into and openings through an *exit passageway* are prohibited except for required *exit* doors, equipment and ductwork necessary for independent pressurization, sprinkler piping, standpipes, electrical raceway for fire department communication and electrical raceway serving the *exit passageway* and terminating at a steel box not exceeding 16 square inches (0.010m2). Such penetrations shall be protected in accordance with Section 713 of the *International Building Code*. There shall be no penetrations or communicating openings, whether protected or not, between adjacent *exit passageways*.

Exception: Unfired unit heaters allowed by Section 1022.10 to be installed in exit enclosures are permitted to penetrate one membrane. The conduit serving the heater is permitted to penetrate both membranes.

***

SECTION 1026
EXTERIOR EXIT RAMPS AND STAIRWAYS

***

1026.3 Open side. *Exterior exit ramps* and *stairways* serving as an element of a required *means of egress* shall be at least 50 percent open on at least one side. An open side shall have a minimum of ((~~35~~)) 28 square feet (((~~3.3~~)) 2.6 m2) of aggregate open area adjacent to each floor level. ((~~and the level of each intermediate landing. The required open area shall be located not less than 42 inches (1067 mm) above the adjacent floor or landing level.~~)) The open area shall be distributed to prevent accumulation of smoke or toxic gases.

***

SECTION 1027
EXIT DISCHARGE

1027.1 General. *Exits* shall discharge directly to the exterior of the building. The *exit discharge* shall be at grade or shall provide direct access to grade. The *exit discharge* shall not reenter a building except into an exit or as otherwise approved by the building official. The combined use of Exceptions 1 and 2 below shall not exceed 50 percent of the number and capacity of the required *exits*.

Exceptions:

1. A maximum of 50 percent of the number and capacity of the *exit enclosures* is permitted to egress through areas on the level of discharge provided all of the following are met:

    1.1. Such *exit enclosures* egress to a free and unobstructed path of travel to an exterior *exit* door and such *exit* is readily visible and identifiable from the point of termination of the *exit* enclosure.

    1.2. The entire area of the *level of exit discharge* is separated from areas below by construction conforming to the *fire-resistance rating* for the *exit enclosure*.

    1.3. The egress path from the *exit enclosure* on the *level of exit discharge* is protected throughout by an *approved automatic sprinkler system*. All portions of the *level of exit discharge* with access to the egress path shall either be protected throughout with an *automatic sprinkler system* installed in accordance with Section 903.3.1.1 or 903.3.1.2, or separated from the egress path in accordance with the requirements for the enclosure of *exits*.

2. A maximum of 50 percent of the number and capacity of the *exit enclosures* is permitted to egress through a vestibule provided all of the following are met:

2.1. The entire area of the vestibule is separated from areas below by construction conforming to the *fire-resistance rating* for the *exit enclosure*.
2.2. The depth from the exterior of the building is not greater than 10 feet (3048 mm) and the length is not greater than 30 feet (9144 mm).
2.3. The area is separated from the remainder of the *level of exit discharge* by construction providing protection at least the equivalent of *approved* wired glass in steel frames.
2.4. The area is used only for *means of egress* and *exits* directly to the outside.
3. *Stairways* in *open parking garages* complying with Section 1022.1, Exception 4, are permitted to egress through the *open parking garage* at their *levels of exit discharge*.
4. *Horizontal exits* complying with Section 1025 shall not be required to discharge directly to the exterior of the building.

***

1027.5 Egress courts. *Egress courts* serving as a portion of the *exit discharge* in the *means of egress* system shall comply with the requirements of Section 1027.

1027.5.1 Width. The width of *egress courts* shall be determined as specified in Section 1005.1, but such width shall not be less than 44 inches (1118 mm), except as specified herein. *Egress courts* serving Group R-3 and U occupancies shall not be less than 36 inches (914 mm) in width. The required width of *egress courts* shall be unobstructed to a height of 7 feet (2134 mm).

Exception: Doors complying with Section 1005.2.

Where an *egress court* exceeds the minimum required width and the width of such *egress court* is then reduced along the path of *exit* travel, the reduction in width shall be gradual. The transition in width shall be affected by a guard not less than 36 inches (914 mm) in height and shall not create an angle of more than 30 degrees (0.52 rad) with respect to the axis of the *egress court* along the path of egress travel. In no case shall the width of the *egress court* be less than the required minimum.

1027.5.2 Construction and openings. Where an *egress court* serving a building or portion thereof is less than 10 feet (3048 mm) in width, the *egress court* walls shall have not less than 1-hour *fire-resistance-rated* construction for a distance of 10 feet (3048 mm) above the floor of the *court*. Openings within such walls shall be protected by opening protectives having a *fire protection rating* of not less than ¾ hour.

Exceptions:
1. *Egress courts* serving an *occupant load* of less than 10.
2. *Egress courts* serving Group R-3.
<u>3. In buildings other than those which have a single means of egress under Section 1021.2.1 item 3, opening protection need not be provided where it is possible to exit in two directions from the court.</u>

***

SECTION 1028
ASSEMBLY
****

1028.13 Handrails. Ramped *aisles* having a slope exceeding one unit vertical in 15 units horizontal (6.7-percent slope) and *aisle stairs* shall be provided with *handrails* located either at the side or within the *aisle* width.

Exceptions:

1. *Handrails* are not required for ramped *aisles* having a gradient no greater than one unit vertical in eight units horizontal (12.5-percent slope) and seating on both sides.
2. *Handrails* are not required if, at the side of the *aisle*, there is a *guard* that complies with the graspability requirements of *handrails*.
3. *Handrail* extensions are not required at the top and bottom of *aisle stairs* and *aisle ramp* runs to *permit* crossovers within the *aisles*.

1028.13.1 Discontinuous handrails. Where there is seating on both sides of the *aisle*, the *handrails* shall be discontinuous with gaps or breaks at intervals not exceeding five rows to facilitate access to seating and to permit crossing from one side of the *aisle* to the other. These gaps or breaks shall have a clear width of at least 22 inches (559 mm) and not greater than 36 inches (914 mm), measured horizontally, and the *handrail* shall have rounded terminations or bends.

((~~1028.13.2 Intermediate handrails.~~ ~~Where *handrails* are provided in the middle of *aisle stairs*, there shall be an additional intermediate *handrail* located approximately 12 inches (305 mm) below the main *handrail*.~~))

****

Section 12. Chapter 12 of the 2009 International Fire Code is amended as follows:

****

1207.3 Solvent storage tanks. Solvent storage tanks for Class II, IIIA and IIIB liquids shall conform to the requirements of Chapter 34 and be located underground or outside, above ground.
Exceptions: 1. As provided in NFPA 32 for inside storage o~~r~~f treatment tanks.
2. Solvent tanks located within *approved* rooms or buildings in accordance with Section 3405.3.7 for use, mixing and dispensing of flammable and combustible liquids.

****

Section 13. Chapter 13 of the 2009 International Fire Code is amended as follows:

****

1303.1.1 Static accumulation. If processes or conditions exist where combustible dust could be ignited by static electricity, means shall be provided to prevent the accumulation of a static charge.

***

1303.3 Dust collection equipment and interlocks. Suitable dust-collecting equipment shall be installed on all dust producing machinery and interlocked with the machinery power supply so that the machinery cannot be operated without the dust-collection equipment also operating.

[M] 1303.4 Model shops and other intermittent use facilities. Equipment or machinery located inside buildings that emit dust but are used on an intermittent basis, including, but not limited to, model shops, research and development facilities, hobby, and other non-production uses, shall be provided with a local, point of use dust collection system. The dust collector can be a portable type with high efficiency filters to allow exhaust air to be discharged back into the space. Such collectors are not required to be provided with an approved explosion-control system. Such systems shall be limited to no more than 1,000 cfm.

***

Section 14. Chapter 14 of the 2009 International Fire Code is amended as follows:

CHAPTER 14
FIRE SAFETY DURING CONSTRUCTION AND DEMOLITION

SECTION 1401
GENERAL

1401.1 Scope. This chapter shall apply to structures in the course of construction, *alteration* or demolition, including those in underground locations. Compliance with NFPA 241 is required for items not specifically addressed herein.

Construction, alteration and demolition of fixed guideway transit and passenger rail systems tunnels shall comply with NFPA 130 as amended and WAC 296-155, Part Q, underground Construction.

1401.1.1 Point of Information

Adopted local amendments to NFPA 130 can be accessed at http://www.seattle.gov/fire/FMO/firecode/nfpaAmendments.htm

Construction, alteration and demolition of road tunnels shall comply shall comply with NFPA 502 as amended and WAC 296-155, Part Q, Underground Construction.

1401.1.2 Point of Information

Adopted local amendments to NFPA 502 can be accessed at http://www.seattle.gov/fire/FMO/firecode/nfpaAmendments.htm

***

1404.5 Fire watch. Fire watch for buildings under construction or alteration shall be provided in accordance with the Administrative Rule 9.06.07, *Out-Of-Service Fire Alarm, Standpipe, Fire Sprinkler and Emergency Alarm Systems* and any future revisions of this rule adopted by the *fire code official*. When required by the *fire code official* for building demolition that is hazardous in nature, qualified personnel shall be provided to serve as an on-site fire watch. Fire watch personnel shall be provided with at least one *approved* means for notification of the fire department and their sole duty shall be to perform constant patrols and watch for the occurrence of fire.

1404.6 ((~~**Cutting and welding.** Operations involving the use of cutting and welding shall be done~~))**Hot work.** Hot work operations shall be conducted in accordance with Chapter 26.

***

[B] 1411.3 Stairway floor number signs. Temporary stairway floor number signs shall be provided in accordance with the requirements of Section 1022.8.1.

***

1413.1 Where required. In buildings required to have standpipes by Section 905.3.1, not less than one Class I standpipe shall be provided, in accordance with Section 905, for use during construction. Such standpipes shall be installed when the progress of construction is not more than 40 feet (12 192 mm) in height above the lowest level of fire department ((~~vehicle~~)) access. Such standpipe shall be provided with fire department hose connections at accessible locations adjacent to usable stairs. Such standpipes shall be extended as construction progresses to within one floor of the highest point of construction having secured decking or flooring.

***

1414.1 Completion before occupancy. In buildings where an *automatic sprinkler system* is required by this code or the *International Building Code*, it shall be unlawful to occupy any portion of a building or structure until the *automatic sprinkler system* installation has been tested and *approved*, except as provided in Section 105.3.4, and Administrative Rule 9.07.07,

Partial/Phased Occupancy, Occupancy During Construction and Temporary Certificates of Occupancy and any future revisions of this rule adopted by the *fire code official*.

Section 15. Chapter 15 of the 2009 International Fire Code is amended as follows:

***

1501.2 Nonapplicability. This chapter shall not apply to:

1. S((s))pray finishing utilizing flammable or *combustible liquids* which do not sustain combustion, including:

1.1 Liquids that have no fire point when tested in accordance with ASTM D 92.

1.2((.)) Liquids with a flashpoint greater than 95°F (35°C) in a water-miscible solution or dispersion with a water and inert (noncombustible) solids content of more than 80 percent by weight.

2. Mobile spray coaters registered with, and meeting the requirements of, the Puget Sound Clean Air Agency.

1501.2 Point of Information

Details relating to the Puget Sound Clean Air Agency's (PSCAA) rules and requirements can be obtained online at:
www.pscleanair.org/regulated/mobilespraycoaters/assistance.aspx
or by contacting PSCAA at (206) 434-8800.

***

1504.2 Location of spray-finishing operations. Spray finishing operations conducted in buildings used for Group A, E, I or R occupancies shall be located in a spray room protected with an *approved automatic sprinkler system* installed in accordance with Section 903.3.1.1 and separated vertically and horizontally from other areas in accordance with the *International Building Code*. In other occupancies, spray-finishing operations shall be conducted in a spray room, spray booth or spraying space *approved* for such use.

Exceptions:

1. Automobile undercoating spray operations and spray-on automotive lining operations conducted in areas with *approved* natural or mechanical ventilation shall be exempt from the provisions of Section 1504 when *approved* and where utilizing Class IIIA or IIIB *combustible liquids*.

2. In buildings other than Group A, E, I or R occupancies, *approved* limited spraying space in accordance with Section 1504.9.

3. Resin application areas used for manufacturing of reinforced plastics complying with Section 1509 shall not be required to be located in a spray room, spray booth or spraying space.

Spray-finishing operations are allowed in basements only if confined to either an *approved* spray booth or an *approved* spray room protected by an *approved* automatic fire sprinkler system and if such basement is protected throughout by an *approved* automatic sprinkler system in accordance with Chapter 9.

***

1504.7.8.5 Filter disposal. Discarded filter pads shall be immediately ((~~removed to a safe, detached location or~~)) placed in a noncombustible container with a tight-fitting lid and disposed of ((~~properly~~)) in accordance with local and state hazardous waste regulations.

***

1504.9 Limited spraying spaces. Limited spraying spaces shall comply with Sections 1504.9.1 through 1504.9.4.

Limited spraying spaces are prohibited if they are used as the exclusive location for spray finishing operations and auto refinishing and collision repair are the primary business.

1504.9.1 Job size. The aggregate surface area to be sprayed shall not exceed 9 square feet (0.84 m2).

1504.9.2 Frequency. Spraying operations shall not be of a continuous nature.

1504.9.3 Ventilation. Positive mechanical ventilation providing a minimum of six complete air changes per hour shall be installed. Such system shall meet the requirements of this code for handling flammable vapor areas. Explosion venting is not required.

> **Exception:** Negative mechanical ventilation, providing a minimum of six complete air changes per hour, is allowed if a fan rated for Class I, Division 2 hazardous locations in accordance with the Electrical Code is installed.

1504.9.4 Electrical wiring and equipment. Electrical wiring and equipment within 10 feet (3048 mm) of the floor and 20 feet (6096 mm) horizontally of the limited spraying space shall be designed for Class I, Division 2 locations in accordance with NFPA 70.

***

Section 16. Chapter 17 of the 2009 International Fire Code is amended as follows:

***

1703.2.1 Electricity. Electricity shall be shut off.

Exception: Circulating fans that have been specifically designed for utilization in hazardous atmospheres and installed in accordance with NFPA 70 and temporary remote control power leads with control switches located outside the fumigant space for powering such fans.

***

Section 17. Chapter 21 of the 2009 International Fire Code is amended as follows:

CHAPTER 21
((~~INDUSTRIAL~~)) OVENS, DRYERS, AND FURNACES

SECTION 2101
GENERAL

2101.1 Scope. This chapter shall apply to the installation and operation of Class A, Class B, and Class C ((~~industrial~~))ovens, dryers and furnaces operating at approximately atmospheric pressure and used for commercial or industrial processing of materials and Class D ovens and furnaces operating above ambient temperatures to over 5,000 °F (2,670 °C) and at pressures normally below atmospheric to 10^{-8} torr (1.33×10^{-6} Pa). This chapter does not apply to listed equipment with a heating system that supplies a total input not exceeding 150,000 Btu/hr (44kW) or to coal or solid fuel-fired food service equipment. ~~Industrial~~ O~~o~~vens, dryers and furnaces shall comply with the applicable provisions of NFPA 86, the *International Fuel Gas Code*, *International Mechanical Code* and this chapter. The terms "ovens", "dryers" and "furnaces" are used interchangeably in this chapter.

***

2102.1 Definitions. The following words and terms shall, for the purposes of this chapter and as used elsewhere in this code, have the meanings shown herein.

FURNACE CLASS A. An oven or furnace that has heat utilization equipment operating at approximately atmospheric pressure wherein there is a potential explosion or fire hazard that could be occasioned by the presence of flammable volatiles or combustible materials processed or heated in the furnace.

2102.1.1 Point of Information

((~~**Note:**~~))Such flammable volatiles or combustible materials can, for instance, originate from the following:
1. Paints, powders, inks, and adhesives from finishing processes, such as dipped, coated, sprayed and impregnated materials.
2. The substrate material.
3. Wood, paper and plastic pallets, spacers or packaging materials.

4. Polymerization or other molecular rearrangements.
Potentially flammable materials, such as quench oil, water-borne finishes, cooling oil or cooking oils that present a hazard are ventilated according to Class A standards.

FURNACE CLASS B. An oven or furnace that has heat utilization equipment operating at approximately atmospheric pressure wherein there are no flammable volatiles or combustible materials being heated.

FURNACE CLASS C. An oven or furnace that has a potential hazard due to a flammable or other special atmosphere being used for treatment of material in process.

2101.1.2 Point of Information

This type of furnace can use any type of heating system and includes a special atmosphere supply system. Also included in the Class C classification are integral quench furnaces and molten salt bath furnaces.

FURNACE CLASS D. An oven or furnace that is a pressure vessel that operates under vacuum for all or part of the process cycle, operates at temperatures from above ambient to over 5,000°F (2760°C) and at pressures normally below atmospheric using any type of heating system. These furnaces can include the use of special processing atmospheres.

2101.1.3 Point of Information

Class D furnaces operate at or below atmospheric pressure (vacuum) and do not fall into the jurisdiction of the Boiler and Pressure Vessel Code.

***

2103.1 Ventilation. Enclosed rooms or *basements* containing ((~~industrial~~)) ovens or furnaces shall be provided with combustion air in accordance with the *International Mechanical Code* and the *International Fuel Gas Code*, and with ventilation air in accordance with the *International Mechanical Code.*

***

2103.3 Ignition source. ((~~Industrial o~~))Ovens, dryers, and furnaces shall be located so as not to pose an ignition hazard to flammable vapors or mists or *combustible dusts*.

***

SECTION 2104
FUEL PIPING

2104.1 Fuel-gas piping. Fuel-gas piping serving ((~~industrial~~))ovens shall comply with the *International Fuel Gas Code*. Piping for other fuel sources shall comply with this section.

2104.2 Shutoff valves. Each ((~~industrial~~))oven, dryer or furnace shall be provided with an *approved* manual fuel shutoff valve in accordance with the *International Mechanical Code* or the *International Fuel Gas Code*.

***

Section 18. Chapter 22 of the 2009 International Fire Code is amended as follows:

CHAPTER 22
MOTOR FUEL-DISPENSING FACILITIES AND REPAIR GARAGES

SECTION 2201
GENERAL

2201.1 Scope. Automotive motor fuel-dispensing facilities, marine motor fuel-dispensing facilities, fleet vehicle motor fuel-dispensing facilities, aircraft motor-vehicle fuel-dispensing facilities and repair garages shall be in accordance with this chapter and the *International Building Code*, *City of Seattle Source Control Technical Requirements Manual (DPD Director's Rule 15-2009)*, *International Fuel Gas Code* and *International Mechanical Code*. Such operations shall include both those that are accessible to the public and private operations.

2201.1 Point of Information
For provisions relating to the transfer of flammable and combustible liquids directly from tank vehicles into the fuel tanks of motor vehicles located at commercial, industrial, governmental or manufacturing establishments, see Section 3406.5.4.5.

***

FIRE DISTRICT. Shall consist of that part of the city within the boundary described in Section 401 of the *Seattle Building Code* as follows:
Beginning at the intersection of the center line of Alaskan Way and Clay Street; thence northeasterly along the center line of Clay Street to an intersection with the center line of Denny Way; thence easterly along the center line of Denny Way to an intersection with the center line of Yale Avenue; thence southeasterly along the center line of Yale Avenue to an intersection with the center line of Interstate Highway 5; thence southerly and southeasterly along the center line of Interstate 5 to an intersection with the center line of 7th Avenue South; thence southerly along the center line of 7th Avenue South to an intersection with the center line of Dearborn Street;

thence westerly along the center line of Dearborn Street to an intersection with the center line of Airport Way; thence northwesterly along the center line of Airport Way to an intersection with the center line of 4th Avenue South; thence southerly along the center line of 4th Avenue south to an intersection with the center line of South Royal Brougham Way; thence westerly along said center line of South Royal Brougham Way to an intersection with the center line of South Alaskan Way; thence southerly along the center line of South Alaskan Way to an intersection with the center line of South Massachusetts Street; thence westerly along the centerline of South Massachusetts Street to the Outer Harbor Line in Elliott Bay; thence northerly and northwesterly along said Outer Harbor Line to an intersection with the center line of West Harrison Street; thence easterly along the center line of West Harrison Street to an intersection with the center line of Alaskan Way; then southeasterly along the center line of Alaskan Way to the point of beginning.

2202.1.1 Point of Information

For a map of the City of Seattle *Fire District*, see the *Seattle Building Code*.

***

2202.1 Definitions. The following words and terms shall, for the purposes of this chapter and as used elsewhere in this code, have the meanings shown herein.

***

MARINE MOTOR FUEL-DISPENSING FACILITY. That portion of property where flammable or *combustible liquids* or gases used as fuel for ((~~watercraft~~))*vessels* are stored and dispensed from fixed equipment on shore, piers, wharves, floats or barges into the fuel tanks of ((~~watercraft~~))*vessels* and shall include all other facilities used in connection therewith.

2202.1.2 Point of Information

Marine motor fuel-dispensing facilities are not to be confused with marine bulk plants that transfer fuel by way of flange-to-flange connections. Marine motor fuel-dispensing facilities use automotive-type dispensing equipment for fueling primarily pleasure craft.

MOTOR VEHICLE Includes, but is not limited to, a vehicle, machine, tractor, trailer or semitrailer, or any combination thereof, propelled or drawn by mechanical power and used upon the highways in the transportation of passengers or property. It does not include a vehicle, locomotive or car operated exclusively on a rail or rails, or a trolley bus operated by electric power derived from a fixed overhead wire, furnishing local passenger transportation similar to street-railway service. The term “motor vehicle” also includes freight containers or cargo tanks used, or intended for use, in connection with motor vehicles.

2202.1.3 Point of Information

For reference, see 49 CFR Pt. 171.8 (October 2009).

MOTOR VEHICLE, UNATTENDED A motor vehicle in such a condition that the driver cannot see the motor vehicle or hear noises in or near the motor vehicle.

Exceptions:

1. Necessary absence in connection with loading and unloading the motor vehicle.
2. Stops for meals during the day or night, if the point of parking is well lighted.
3. If in case of accident or other emergency, the driver must leave to obtain assistance.

***

2203.2 Emergency disconnect switches. An *approved*, clearly identified and readily accessible emergency disconnect switch shall be provided at an *approved* location, to stop the transfer of fuel to the fuel dispensers in the event of a fuel spill or other emergency. An emergency disconnect switch for exterior fuel dispensers shall be located within 100 feet (30 480 mm) of, but not less than 20 feet (6096 mm) from, the fuel dispensers. For interior fuel-dispensing operations, the emergency disconnect switch shall be installed at an *approved* location. Such devices shall be distinctly *labeled* as: EMERGENCY FUEL SHUTOFF. Signs shall be provided in *approved* locations and letters shall not be less than 3 inches (76.2 mm) in height and 1/2 inch (12.7 mm) in stroke.

***

2204.4.1 Approved containers required. Class I, II and IIIA liquids shall not be dispensed into a portable container unless such container does not exceed a 6-gallon (22.7 L) capacity, is *listed* or of *approved* material and construction, and has a tight closure with a screwed or spring-loaded cover so designed that the contents can be dispensed with-out spilling. Liquids shall not be dispensed into portable or cargo tanks.

It is unlawful to sell, offer for sale or distribute any container for the storage and/or handling of flammable liquids, unless such container has been approved for such purpose under applicable provisions of this code.

***

2205.1 Tank filling operations for Class I, II ((~~or~~)) IIIA liquids, or IIIB liquids. Delivery operations to tanks for Class I, II, ((~~or~~))IIIA, or IIIB liquids shall comply with Sections 2205.1.1 through 2205.1.3 and the applicable requirements of Chapter 34.

***

2206.2 Method of storage. *Approved* methods of storage for Class I, II, ((~~and~~))IIIA, and IIIB liquid fuels at motor fuel-dispensing facilities shall be in accordance with Sections 2206.2.1 through 2206.2.5.

***

2206.2.2 Above-ground tanks located inside buildings. Above-ground tanks for the storage of Class I, II, ((~~and~~)) IIIA, and IIIB liquid fuels are allowed to be located in buildings. Such tanks shall be located in special enclosures complying with Section 2206.2.6, in a liquid storage room or a liquid storage warehouse complying with Chapter 34((~~, or shall be *listed* and *labeled* as protected above-ground tanks~~)).

Exceptions:

1. Above-ground tanks listed and labeled as protected above-ground tanks containing Class I flammable liquids and having an individual capacity not exceeding 120 gallons (454 L) are not required to be located in special enclosures or in a liquid storage room or warehouse.

2. Above-ground tanks listed and labeled as protected above-ground tanks containing Class II or III-A combustible liquids and having an individual capacity not exceeding 660 gallons (908 L) are not required to be located in special enclosures or in a liquid storage room or warehouse.

3. Aboveground tanks for Class III-B liquids not exceeding a maximum individual capacity of 13,200 in unsprinklered buildings.

4. Aboveground tanks for Class III-B liquids in sprinklered buildings.

2206.2.3 Above-ground tanks located outside, above grade. Above-ground tanks shall not be used for the storage of Class I, II, ((~~or~~)) IIIA, and IIIB liquid motor fuels except as provided by this section.

1. Above-ground tanks used for outside, above-grade storage of Class I liquids shall be *listed* and *labeled* as *protected above-ground tanks* and be in accordance with Chapter 34. Such tanks shall be located in accordance with Table 2206.2.3.

2. Above-ground tanks used for outside, above-grade storage of Class II or IIIA liquids ((~~are allowed to~~)) shall be *protected above-ground tanks* ((~~or, when approved by the fire code official, other above-ground tanks that comply~~)) and shall be in accordance with Chapter 34. Tank locations shall be in accordance with Table 2206.2.3.

3. Above-ground tanks containing Class I liquids for fueling motor vehicles are prohibited in the fire district.

4. Above-ground tanks containing Class I liquids for fueling motor vehicles are allowed outside the fire district only if located within an industrial [I] zone, as defined in the *Seattle Land Use Code*.

5. ((~~3~~)). Tanks containing Class I fuels shall not exceed 12,000 gallons (45 420 L) in individual capacity or ((~~48,000~~))12,000 gallons (((~~181 680~~))45 420 L) in aggregate capacity. Tanks containing Class II or III-A liquid fuels shall not exceed 12,000 gallons (45 420 L) in individual capacity or 48,000 gallons (181 680 L) in aggregate capacity. The total maximum aggregate quantity of all flammable and combustible liquids in above-ground storage tanks on site shall not exceed 48,000 gallons (181 680 L).

Installations with the maximum allowable aggregate capacity shall be separated from other such installations by not less than 100 feet (30 480 mm).

6((~~4~~)). Tanks located at farms, construction projects, or rural areas shall comply with Section 3406.2.

7. Above-ground tanks used for outside, above-grade storage of Class III-B liquid motor fuels shall be listed and labeled as protected aboveground tanks or listed and labeled in accordance with UL 142, *Standard for Steel Aboveground Tanks*.

2206.2.4 Above-ground tanks located in above-grade vaults or below-grade vaults. Above-ground tanks used for storage of Class I, II or IIIA liquid motor fuels are allowed to be installed in vaults located above grade or below grade in accordance with Section 3404.2.8 and shall comply with Sections 2206.2.4.1 and 2206.2.4.2. Tanks in above-grade vaults shall also comply with Table 2206.2.3.

2206.2.4.1 Tank capacity limits. Tanks storing Class I liquids are limited to maximum individual capacity of 12,000 gallons (45 420 L) and an aggregate capacity at an individual site of 12,000 gallons (45 420 L). Tanks storing ((~~and~~)) Class II and Class III-A liquids at an individual site shall be limited to a maximum individual capacity of ((~~15,000~~)) 12,000 gallons (((~~56 775~~)) 45 420 L) and an aggregate capacity of 48,000 gallons (181 680 L).

2206.2.4.2 Above-ground tanks located in vaults at ((~~F~~))fleet vehicle motor fuel-dispensing facilities. Vaulted ((~~T~~))tanks storing Class II and Class IIIA liquids at a fleet vehicle motor fuel-dispensing facility shall be limited to a maximum individual capacity of 20,000 gallons (75 700 L) and an aggregate capacity of 80,000 gallons (302 800 L).

2206.2.5 Portable tanks. Where *approved* by the *fire code official*, portable tanks are allowed to be temporarily used in conjunction with the dispensing of Class I, II,((~~or~~)) IIIA, or IIIB liquids

into the fuel tanks of motor vehicles or motorized equipment on premises not normally accessible to the public. The approval shall include a definite time limit.

***

2206.6.2 Piping, valves, fittings and ancillary equipment for above-ground tanks for Class I, II, ((~~and~~))IIIA, and IIIB liquids. Piping, valves, fittings and ancillary equipment for above-ground tanks shall comply with Sections 2206.6.2.1 through 2206.6.2.6.

***

2206.7.6.1 Special requirements for nozzles. Where dispensing of Class I, II,((~~or~~)) IIIA, or IIIB liquids is performed, a *listed* automatic-closing-type hose nozzle valve shall be used incorporating all of the following features:

1. The hose nozzle valve shall be equipped with an integral latch-open device.
2. When the flow of product is normally controlled by devices or equipment other than the hose nozzle valve, the hose nozzle valve shall not be capable of being opened unless the delivery hose is pressurized. If pressure to the hose is lost, the nozzle shall close automatically.
   Exception: Vapor recovery nozzles incorporating insertion interlock devices designed to achieve shutoff on disconnect from the vehicle fill pipe.
3. The hose nozzle shall be designed such that the nozzle is retained in the fill pipe during the filling operation.
4. The system shall include *listed* equipment with a feature that causes or requires the closing of the hose nozzle valve before the product flow can be resumed or before the hose nozzle valve can be replaced in its normal position in the dispenser.

***

2207.1.1 Prohibited locations. Motor fuel-dispensing facilities for liquefied petroleum gas (LP-gas) fuel are prohibited in the *fire district*.

***

2209.1.1 Prohibited locations. Hydrogen motor fuel-dispensing and generation facilities are prohibited in the *fire district*.

***

Section19. Chapter 24 of the 2009 International Fire Code is amended as follows:

***

2403.2 Approval required. Tents and membrane structures having an area in excess of 400 square feet (37 m2) shall not be erected((~~, operated~~)) or maintained for any purpose without first obtaining a permit and approval from the *fire code official*.

Exceptions:

1. Tents used exclusively for recreational camping purposes.
2. Funeral tents and curtains or extensions attached thereto, when used for funeral services.

((~~2~~))3. Tents open on all sides which comply with all of the following:

((~~2~~))3.1. Individual tents having a maximum size of 700 square feet (65 m2).

((~~2~~))3.2. The aggregate area of multiple tents placed side by side without a fire break clearance of 12 feet (3658 mm), not exceeding 700 square feet (65 m2) total.

((~~2~~))3.3. A minimum clearance of 12 feet (3658 mm) to all structures and other tents.

***

2404.2 Flame propagation performance treatment. Before a permit is granted, the *owner* or agent shall file with the fire code official a certificate executed by an approved testing laboratory certifying that the tents and membrane structures and their appurtenances; sidewalls, drops and tarpaulins; floor coverings, bunting and combustible decorative materials and effects, including sawdust when used on floors or passageways, are composed of material meeting the flame propagation performance criteria of NFPA 701 or other *approved* standard, or shall be treated with a flame retardant in an *approved* manner and meet the flame propagation performance criteria of NFPA 701, and that such flame propagation performance criteria are effective for the period specified by the permit.

2404.2 Point of Information

Accepted flame certificates for decorative materials include:
1. Certificates indicating compliance with NFPA 701.
2. Certificates verifying approval through the California State Fire Marshal.
3. Certificates indicating compliance with CPAI-84 (*Canvas Products Association International*).

***

Section 20. Chapter 25 of the 2009 International Fire Code is amended as follows:

***

2505.4 Distance from lot lines and buildings. Tire storage piles shall be located at least 50 feet (15 240 mm) from *lot lines* and buildings.

Exception: When stored on a single rack having dimensions not exceeding 68 inches by 48 inches by 76 inches (1727 mm by 1219 mm by 1930 mm) for commercial display, the distance to property lines that can be built upon may be reduced to 10 feet (3048 mm) and no separation is required from buildings on the same property.

***

Section 21. Chapter 26 of the 2009 International Fire Code is amended as follows:

CHAPTER 26
WELDING AND OTHER HOT WORK

SECTION 2601
GENERAL

2601.1 Scope. Welding, cutting, open torches and other hot work operations and equipment shall comply with this chapter.

> **Exception:** Hot work on board marine vessels at dock or under construction or repair shall be in accordance with Administrative Rules 26.01.09, *Cutting, Welding and Other Hot Work on Marine Vessels* and 26.02.09 *Designated Marine Hot Work Facilities and Shipyards* and any future revisions of this rule adopted by the *fire code official*.

***

2601.5 Design and installation of oxygen-fuel gas systems. ((~~The design and installation of~~ **))** A((~~a~~))n oxygen-fuel gas system with two or more manifolded cylinders of oxygen shall be in accordance with NFPA 51.

***

2602.1 Definitions. The following words and terms shall, for the purposes of this chapter and as used elsewhere in this code, have the meanings shown herein.

HOT WORK. Operations including cutting, welding, Thermit welding, brazing, soldering, grinding, thermal spraying, thawing pipe, installation of torch-applied roof systems, glass blowing, weed burning, or any other similar spark, arc or flame-producing activity.

***

P_F DEVICE. A wet or dry device (or assembly of devices) in a fuel gas line designed to perform the following three functions:
(a) Prevent backflow of oxygen into the fuel gas supply system;
(b) Prevent the passage of flame into the fuel gas supply system (flashback);
(c) Prevent the development of a fuel gas-oxygen mixture at sufficient pressure so that its ignition would achieve combustion pressures that could cause failure to perform functions (a) and (b).

This device is given a diagram symbol, P_F. A wet P_F device is commonly known as a hydraulic seal, hydraulic valve or hydraulic back-pressure valve.

***

2604.2.2 Location. The fire watch shall include the entire hot work area and be positioned so that the extinguishment of a spot fire is not delayed. Hot work conducted in areas with vertical or horizontal fire exposures that are not observable by a single individual shall have additional personnel assigned to fire watches to ensure that exposed areas are monitored.

2604.2.3 Duties. Individuals designated to fire watch duty shall have no other duties except to watch for fire, ((~~fire-extinguishing equipment readily available and shall be trained in the use of such equipment. Individuals assigned to fire watch duty shall be responsible for~~))extinguish((~~ing~~)) spot fires and communicate((~~ing~~)) an alarm.

2604.2.4 Fire extinguishing equipment training. The individuals responsible for performing the hot work and individuals responsible for providing the fire watch shall ((~~be trained in the use of portable fire extinguishers~~))have fire-extinguishing equipment readily available and shall be trained in the use of such equipment.

2604.2.5 Fire hoses. Where hoselines are required, they shall be connected, charged and ready for operation.

2604.2.6 Fire extinguisher. A minimum of one portable fire extinguisher complying with Section 906 and with a minimum ((~~2~~))3-A:((~~20~~))40-B:C rating shall be readily accessible within 30 feet (9144 mm) of the location where hot work is performed.

***

2605.4 Fuel gases and liquid oxygen.

2605.4.1 Acetylene gas and other nonliquefied flammable gases.

2605.4.1.1 Prohibitions. Acetylene gas shall not be:
1. ((~~p~~)) Piped except in approved cylinder manifolds and cylinder manifold connections, or
2. ((~~u~~)) Utilized at a pressure exceeding 15 pounds per square inch gauge (psig) (103 kPa) unless dissolved in a suitable solvent in cylinders manufactured in accordance with DOTn 49 CFR Part 178.

2605.4.1.2 Unalloyed copper. Acetylene gas shall not be brought in contact with unalloyed copper, except in a blowpipe or torch.

2605.4.1.3 Maximum acetylene and other nonliquefied flammable gas quantities inside buildings. The maximum quantity of acetylene and other nonliquefied flammable gas used and stored inside buildings in conjunction with hot work operations shall be in accordance with this section.

2605.4.1.3.1 Group A, B, E, I, M and R occupancies.
Acetylene gas and other nonliquefied flammable gas shall not be stored or used in Group A, B, E, I, M or R occupancies.
Exceptions:

1. Individual cylinders not exceeding 150 cubic feet (4m3) each at normal temperature and pressure (NTP). Aggregate quantity of flammable gas shall not exceed 1,000 cubic feet (28 m3) in unsprinklered buildings and 2,000 cubic feet (57m3) in sprinklered buildings.
2. Buildings under construction or demolition where individual acetylene gas and other nonliquefied flammable gas cylinders do not exceed 300 cubic feet (8 m3) each at normal temperature and pressure and the aggregate storage quantity inside the building does not exceed 1,000 cubic feet (28 m3).

2605.4.1.3.2 Group F and S occupancies. Acetylene and other nonliquefied flammable gas shall not be stored or used in Group F and S occupancies in excess of the maximum allowable quantities set forth in Table 2703.1.1 (1).

2605.4.1.3.3 Mixed use occupancies. Individual fuel gas cylinders within F or S occupancies in buildings having any other use shall be limited to 250 cubic feet (7 m3) at normal temperature and pressure and shall be limited to a total aggregate gas capacity of 1,000 cubic feet (70.8 m3) at normal temperature and pressure of acetylene or other nonliquefied flammable gas.

2605.4.2 Liquefied petroleum gas (LP-gas) and methylacetylenepropadiene (MAPP gas).

2605.4.2.1 Maximum LP-gas and MAPP gas quantities inside buildings. The maximum quantity of LP-gas and MAPP gas used and stored inside buildings in conjunction with hot work operations shall be in accordance with this section.

2605.4.2.1.1 Group A, B, E, I, M and R occupancies. LP-gas and MAPP shall not be stored or used in Group A, B, E, I, M or R occupancies.

Exceptions:

1. A single LP-gas or a single MAPP gas cylinder not exceeding 50-pounds (22.7 kg) water capacity [nominal 20 pounds (9 kg) LP-gas] in Group E and M occupancies.
2. Individual LP-gas or MAPP gas cylinders not exceeding 12-pounds (5.4 kg) water capacity [nominal 5 pounds (2.3 kg) LP-gas] in Group I occupancies.
3. Unoccupied buildings under construction or demolition where individual LP-gas or MAPP gas cylinders do not exceed 240-pounds (109 kg) water capacity [nominal 100 pounds (45.4 kg) LP-gas] and the aggregate quantity inside the building does not exceed an aggregate water capacity of 735 pounds (333.4 kg) [nominal 300 pounds (136 kg) LP-gas] on the site.
4. Occupied buildings under construction or demolition where individual LP-gas or MAPP gas cylinders do not exceed 104-pounds (47 kg) water capacity [nominal 43.5 pounds (19.7 kg) LP-gas] and the aggregate quantity inside the building does not exceed 357-pounds (162 kg) water capacity [nominal 150 pounds (68 kg) LP-gas].
5. Approved self-contained torch assemblies fueled by LP-gas containers having an individual water capacity not exceeding 2.7 pounds (1.2 kg).

2605.4.2.1.2 Group F and S occupancies. LP-gas and MAPP gas shall not be stored or used in excess of 735 pounds (333.4 kg) aggregate water capacity [nominal 300 pounds (136 kg) LP-gas] in Group F and S occupancies.

2605.4.2.1.3 Mixed use occupancies. LP-gas and MAPP gas storage and use inside Group F and S occupancies within buildings having any other use shall be limited to cylinders having an individual water capacity not exceeding 50 pounds (22.7 kg) [nominal 20 pounds (9 kg) LP-gas] and a total aggregate water capacity not to exceed 144 pounds (65 kg) [nominal 60 pounds (27 kg) LP-gas].

2605.4.3 Liquid oxygen (LOX). Liquid oxygen shall not be stored or used in an unsprinklered building in an aggregate quantity exceeding 45 gallons (170 L) per control area or an aggregate quantity of 90 gallons (340 L) per control area in a sprinklered building.

2605.4.4 Separation of cylinders in storage. Fuel gas cylinders shall be separated from compressed oxygen cylinders and liquid oxygen containers by a minimum of 20 feet (6096 mm) or by a barrier of noncombustible construction at least 5 feet (1524 mm) high having a fire-resistive rating of at least 1/2 hour. The barrier shall interrupt all lines of sight between oxygen and fuel gas cylinders within 20 feet (6096 mm) of each other.

2605.5 Remote locations. Oxygen and fuel-gas cylinders and acetylene generators shall be located away from the hot work area to prevent such cylinders or generators from being heated by radiation from heated materials, sparks or slag, or misdirection of the torch flame.

2605.6 Cylinders shutoff. The torch valve shall be closed and the gas supply to the torch completely shut off when gas ((~~welding or cutting~~))hot work operations are discontinued for a period of 1 hour or more.

***

2609.8 PF devices. PF devices shall be designed and installed in fuel gas lines in accordance with NFPA 51.

Section 22. Chapter 27 of the 2009 International Fire Code is amended as follows:

CHAPTER 27
HAZARDOUS MATERIALS—GENERAL PROVISIONS

SECTION 2701
GENERAL

2701.1 Scope. Prevention, control and mitigation of dangerous conditions related to storage, dispensing, use and handling of hazardous materials and notification of biosafety level 3 and biosafety level 4 operations shall be in accordance with this chapter. This chapter shall apply to all hazardous materials, including those materials regulated elsewhere in this code, except that when specific requirements are provided in other chapters, those specific requirements shall apply in accordance with the applicable chapter. Where a material has multiple hazards, all hazards shall be addressed.

Exceptions:

1. The quantities of alcoholic beverages, medicines, foodstuffs, cosmetics and consumer or industrial products containing not more than 50 percent by volume of water-miscible liquids and with the remainder of the solutions not being flammable, in retail or wholesale sales occupancies, are unlimited when packaged in individual containers not exceeding 1.3 gallons (5 L).
2. Application and release of pesticide and agricultural products and materials intended for use in weed abatement, erosion control, soil amendment or similar applications when applied in accordance with the manufacturers' instructions and label directions.
3. The off-site transportation of hazardous materials when in accordance with Department of Transportation (DOTn) regulations.
4. Building materials not otherwise regulated by this code.
5. Refrigeration systems (see Section 606).
6. Stationary storage battery systems regulated by Section 608.
7. The display, storage, sale or use of fireworks and *explosives* in accordance with Chapter 33.
8. *cryogenics* utilized in personal and household products in the manufacturers' original consumer packaging in Group M occupancies.
9. The storage of distilled spirits and wines in wooden barrels and casks.
10. The use of wall-mounted dispensers containing alcohol-based hand rubs classified as Class I or II liquids when in accordance with Section 3405.5.
11. Hazardous materials handled at marine terminals in accordance with Section 2701.1.2.

2701.1.1Waiver. The provisions of this chapter are waived when the *fire code official* determines that such enforcement is preempted by other codes, statutes or ordinances. The details of any action granting such a waiver shall be recorded and entered in the files of the ((~~code enforcement agency~~))*fire code official*.

2701.1.2 Hazardous materials at marine terminals. Hazardous materials that are handled and temporarily located at marine terminals and are incidental to transportation shall be in accordance with the Administrative Rule 27.01.09, *Marine Terminals* and any future revisions of this rule adopted by the *fire code official*.

2701.1.3 Underground storage tanks. Pursuant to Section 106.5.1, the *fire code official approves* permits to install underground tanks issued by and inspections of underground tanks conducted by the Washington State Department of Ecology.

***

2701.5.2 Hazardous Materials Inventory Statement (HMIS). Where required by the *fire code official*, ((~~an~~)) each application for a permit shall include a HMIS((~~, such as *Superfund Amendments and Reauthorization Act of 1986* (SARA) Title III, Tier II Report or other *approved* statement)~~). Where required by the *fire code official*, ((~~T~~))the HMIS shall be in an *approved* format, updated annually and include the following information:

1. Product name.
2. Component.
3. Chemical Abstract Service (CAS) number.
4. Location where stored or used.
5. Container size.
6. Hazard classification.
7. Amount in storage.
8. Amount in use-*closed systems*.
9. Amount in use-*open systems*.

2701.5.2 Point of Information

Prior to developing a HMIS, please contact the Special Hazards Unit of the Fire Prevention Division for specific guidelines, format and assistance.

***

2701.6.1 Temporarily out-of-service facilities. Facilities that are temporarily out of service shall continue to maintain a permit and be monitored and inspected. Facilities for which a closure plan is required in accordance with Section 2701.5 shall notify the *fire code official* when the facility out-of-service period exceeds 15 days.

***

2701.7 Biosafety level 3 and biosafety level 4 operations. The *fire code official* shall be notified in writing annually of locations where biosafety level 3 (BSL-3) or biosafety level 4 (BSL-4) operations as defined by the U.S. Department of Health and Human Services Centers for Disease Control and Prevention and National Institutes of Health (CDC/NIH) are being performed. Such notification shall identify the specific location(s) within the building where BSL-3 and BSL-4 operations are conducted and shall certify compliance with the CDC/NIH's recommended practices for such operations.

***

2703.2.2.2 Additional regulations for supply piping for health-hazard materials. Supply piping and tubing for gases and liquids having a health-hazard ranking of 3 or 4 in accordance with NFPA704 shall be in accordance with ASME B31.3, the *Seattle Mechanical Code* and the following:

1. Piping and tubing utilized for the transmission of highly toxic, toxic or highly volatile *corrosive* liquids and gases shall have welded, threaded or flanged connections throughout except for connections located within a ventilated enclosure if the material is a gas, or an *approved* method of drainage or containment is provided for connections if the material is a liquid.
2. Piping and tubing shall not be located within *corridors*, within any portion of a *means of egress* required to be enclosed in fire-resistance-rated construction or in concealed spaces in areas not classified as Group H occupancies.

Exception: Piping and tubing within the space defined by the walls of *corridors* and the floor or roof above or in concealed spaces above other occupancies when installed in accordance with Section 415.8.6.3 of the *International Building Code* for Group H-5 occupancies.

***

2703.2.4.1 Underground tanks.

2703.2.4.1.1 General. Underground tanks used for the storage of liquid hazardous materials shall be located, installed and protected in accordance with this code and applicable state and federal regulations. Pursuant to Section 106.5.1, the *fire code official approves* permits to install underground tanks issued by and inspections of underground tanks conducted by the Washington State Department of Ecology.

2703.2.4.1.2 Secondary containment for underground tanks. Underground tanks used for the storage of liquid hazardous materials shall be provided with secondary containment. In lieu of providing secondary containment for an underground tank, an above-ground tank in an underground vault complying with Section 3404.2.8 shall be permitted.

***

2703.2.6 Maintenance. In addition to the requirements of Section 2703.2.3, equipment, machinery and required detection and alarm systems associated with hazardous materials shall be maintained as specified by the manufacturer and in an operable condition. Defective containers, cylinders and tanks shall be removed from service, repaired or disposed of in an *approved* manner. Defective equipment or machinery shall be removed from service and repaired or replaced. Required detection and alarm systems shall be replaced or repaired where defective.

***

2703.2.9.1 Equipment, devices and systems requiring testing. The following equipment, systems and devices shall be tested in accordance with Sections 2703.2.9 and 2703.2.9.2.

1. Gas detection systems, alarms and automatic emergency shutoff valves required by Section 3704.2.2.10 for highly toxic and toxic gases.
2. Limit control systems for liquid level, temperature and pressure required by Sections 2703.2.7, 2704.8 and 2705.1.4.
3. Emergency alarm systems and supervision required by Sections 2704.9 and 2705.4.4.
4. Monitoring and supervisory systems required by Sections 2704.10 and 2705.1.6.
5. Manually activated shutdown controls required by Section 4103.1.1.1 for *compressed gas* systems conveying pyrophoric gases.
6. Gas detectors installed in repair garages for vehicles using lighter-than-air fuels in accordance with Section 2211.7.
7. Refrigerant equipment required in accordance with Section 606.

***

2703.3.1 Unauthorized discharges. The *fire code official* shall be immediately notified and the requirements in Section 2703.3.1.1 through 2703.3.1.4 shall be complied with ((~~W~~))when hazardous materials are released in quantities reportable under state, federal or local regulations, or when any spill or accidental release, inside or outside of a building, could present a fire safety hazard. ((~~the fire code official shall be notified and the following procedures required in accordance with Sections 2703.3.1.1 through 2703.3.1.4.~~))

2703.3.1 Point of Information
Spill emergencies should be immediately reported to the Fire Department via 911. See also Section 401.3.

***

2704.7 Standby or emergency power. Where mechanical ventilation, treatment systems, temperature control, alarm, detection or other electrically operated systems are required, such systems shall be provided with an emergency or *legally required standby power* system in accordance with NFPA 70 and Section 604.

Exceptions:
1. Mechanical ventilation for storage of Class IB and Class IC flammable and *combustible liquids* in closed containers not exceeding 61/2 gallons (25 L) capacity.
2. Storage areas for Class 1 and 2 oxidizers.
3. Storage areas for Class II, III, IV and V organic peroxides.
4. Storage areas for asphyxiant, irritant and radioactive gases.
5. For storage areas for highly toxic or toxic materials, see Sections 3704.2.2.8 and 3704.3.4.2.
6. *Legally required* ((~~S~~))*standby power* for mechanical ventilation, treatment systems and temperature control systems shall not be required where an *approved* fail-safe engineered system is installed.

***

2704.13 Weather protection. Where overhead noncombustible construction is provided for sheltering outdoor hazardous material storage areas, such storage shall not be considered indoor storage when the area is constructed in accordance with the requirements for weather protection as required by Section 414.6 of the *International Building Code.*

Exception: Storage of *explosive* materials shall be considered as indoor storage.

2704.13 Point of Information

When this code allows for the reduction of the set back distance required from outdoor storage areas to adjacent buildings by the construction of a fire-resistive wall in specific chapters elsewhere in this code, that reduction allowance is not considered to meet the intent of the requirement for distance in Item 2 of Section 414.6.1 in the *Seattle Building Code*. The fire-resistive wall and the reduction in distance combined with a weather protection canopy are considered to be indoor storage.

***

2705.1.5 Standby or emergency power. Where mechanical ventilation, treatment systems, temperature control, manual alarm, detection or other electrically operated systems are required, such systems shall be provided with an emergency or *legally required standby power* system in accordance with NFPA 70 and Section 604.

Exceptions:

1. *Legally required* ((~~S~~))*standby power* for mechanical ventilation, treatment systems and temperature control systems shall not be required where an *approved* fail-safe engineered system is installed.
2. Systems for highly toxic or toxic gases shall be provided with emergency power in accordance with Sections 3704.2.2.8 and 3704.3.4.2.

***

2705.3.9 Weather protection. Where overhead noncombustible construction is provided for sheltering outdoor hazardous material use areas, such use shall not be considered indoor use when the area is constructed in accordance with the requirements for weather protection as required in Section 414.6 of the *International Building Code.*

Exception: Use of *explosive* materials shall be considered as indoor use.

2705.3.9 Point of Information

When this code allows for the reduction of the set back distance required from outdoor storage areas to adjacent buildings by the construction of a fire-resistive wall in specific chapters elsewhere in this code, that reduction allowance is not considered to meet the intent of the requirement for distance in Item 2 of Section 414.6.1 in the *Seattle Building Code*. The fire-resistive wall and the reduction in distance combined with a weather protection canopy are considered to be indoor storage.

***

Section 23. Chapter 28 of the 2009 International Fire Code is amended as follows:

***

2802.1 Definitions. The following words and terms shall, for the purposes of this chapter and as used elsewhere in this code, have the meanings shown herein.

***

AEROSOL CONTAINER. A metal can, or a glass or plastic bottle designed to dispense an aerosol. ((~~Metal cans shall be limited to a maximum size of 33.8 fluid ounces (1000 ml). Glass or plastic bottles shall be limited to a maximum size of 4 fluid ounces (118 ml).~~))

***

2804.1.1 Aerosol container size limits. Metal cans are limited to a maximum size of 33.8 fluid ounces (1000 ml). Glass or plastic bottles are limited to a maximum size of 4 fluid ounces (118 ml).

***

Section 24. Chapter 30 of the 2009 International Fire Code is amended as follows:

CHAPTER 30
COMPRESSED GASES

SECTION 3001
GENERAL

3001.1 Scope. Storage, use and handling of *compressed gases* in *compressed gas* containers, cylinders, tanks and systems shall comply with this chapter, including those gases regulated elsewhere in this code. ((~~Partially full *compressed gas* containers, cylinders or tanks containing residual gases shall be considered as full for the purposes of the controls required.~~))

Exceptions:

1. Gases used as refrigerants in refrigeration systems (see Section 606).
2. Compressed natural gas (CNG) for use as a vehicular fuel shall comply with Chapter 22, NFPA 52 and the *International Fuel Gas Code*.

Partially full *compressed gas* containers, cylinders or tanks containing residual gases shall be considered as full for the purposes of the controls required.

((~~Cutting and welding~~))Hot work gases shall also comply with Chapter 26. *Cryogenic fluids* shall comply with Chapter 32.

Liquefied natural gas for use as a vehicular fuel shall also comply with NFPA 52 and NFPA 59A.

Compressed gases classified as hazardous materials shall also comply with Chapter 27 for general requirements and chapters addressing specific hazards, including Chapters 35 (Flammable Gases), 37 (Highly Toxic and Toxic Materials), 40 (Oxidizers, Oxidizing Gases and Oxidizing Cryogenic Fluids) and 41 (Pyrophoric Materials).

LP-gas shall also comply with Chapter 38 and the *International Fuel Gas Code*.

***

((~~**3006.4 Medical gas systems.** Medical gas systems including, but not limited to, distribution piping, supply manifolds, connections, pressure regulators and relief devices and valves, shall comply with NFPA 99 and the general provisions of this chapter.~~))

***

Section 25. Chapter 33 of the 2009 International Fire Code is amended as follows:

CHAPTER 33
EXPLOSIVES AND FIREWORKS

SECTION 3301
GENERAL

3301.1 Scope. The provisions of this chapter shall govern the possession, manufacture, storage, handling, sale and use of *explosives*, *explosive materials*, fireworks and small arms ammunition. The manufacture, storage, handling, sale and use of fireworks are governed by Chapter 70.77 RCW and by Chapter 212-17 WAC.

Exceptions:

1. The Armed Forces of the United States, Coast Guard or National Guard.
2. *Explosives* in forms prescribed by the official United States Pharmacopoeia.
3. The possession, storage and use of small arms ammunition when packaged in accordance with DOTn packaging requirements.
4. The possession, storage and use of not more than 1 pound (0.454 kg) of commercially manufactured sporting black powder, 20 pounds (9 kg) of smokeless powder and 10,000 small arms primers for hand loading of small arms ammunition for personal consumption. For the purposes of this code, the term "for personal consumption" means for use by private individuals and not for resale.
5. The use of *explosive materials* by federal, state and local regulatory, law enforcement and fire agencies acting in their official capacities.
6. Special industrial *explosive* devices which in the aggregate contain less than 50 pounds (23 kg) of *explosive materials*.

7. The possession, storage and use of blank industrial-power load cartridges when packaged in accordance with DOTn packaging regulations.
8. Transportation in accordance with DOTn 49 CFR Parts 100-185.
9. Items preempted by federal regulations.
10. Explosive material, fireworks, pyrotechnic special effect material and small arms ammunition located at permitted marine terminals in accordance with Administrative Rule 27.01.09, *Marine Terminals* and any future revisions of this rule adopted by the *fire code official*.

3301.1.1 Explosive material standard. In addition to the requirements of this chapter, NFPA 495 shall govern the manufacture, transportation, storage, sale, handling and use of *explosive* materials. See also Chapter 70.74 RCW and Chapter 296-52 WAC.

3301.1.2 Explosive material terminals. In addition to the requirements of this chapter, the operation of *explosive material* terminals shall conform to the provisions of NFPA 498.

3301.1.3 Fireworks. The possession, manufacture, storage, sale, handling and use of fireworks are prohibited.
Exceptions:
1. Storage and handling of fireworks as allowed in Section 3304.
((~~2. Manufacture, assembly and testing of fireworks as allowed in Section 3305.~~))
((~~3~~))2. The use of fireworks for fireworks displays as allowed in Section 3308.
((~~4. The possession, storage, sale, handling and use of specific types of Division 1.4G fireworks where allowed by applicable laws, ordinances and regulations, provided such fireworks comply with CPSC 16 CFR, Parts 1500 and 1507, and DOTn 49 CFR, Parts 100-185, for consumer fireworks.~~))

3301.1.4 Rocketry. The storage, handling and use of model and high-power rockets shall comply with the requirements of NFPA 1122, NFPA 1125 and NFPA 1127.

Manufacturing and firing of model rockets is prohibited.

Display of model rocket motors shall be in accordance with Section 3306.5.

A permit is not required for model rocket motors stored in Group R-3 Occupancies meeting the requirements of NFPA 1122, 1125 and 1127 and in accordance with the United States Bureau of Alcohol, Tobacco, Firearms and Explosives.

***

3301.2.4 Financial responsibility. Before a permit is issued, as required by Section 3301.2, ((~~the applicant shall file with the jurisdiction a corporate surety bond in the principal sum of $100,000 or a public liability insurance policy for the same amount, for the purpose of the~~

~~payment of all damages to *persons* or property which arise from, or are caused by, the conduct of any act authorized by the permit upon which any judicial judgment results. The *fire code official* is authorized to specify a greater or lesser amount when, in his or her opinion, conditions at the location of use indicate a greater or lesser amount is required. Government entities shall be exempt from this bond requirement.~~))liability insurance in accordance with Section 105.3.7 of this code shall be obtained.

***

((~~**3301.2.4.2 Fireworks display.** The permit holder shall furnish a bond or certificate of insurance in an amount deemed adequate by the *fire code official* for the payment of all potential damages to a *person* or *persons* or to property by reason of the permitted display, and arising from any acts of the permit holder, the agent, employees or subcontractors.~~))

3301.3 Prohibited explosives and activities.

3301.3.1 Prohibited explosives. Permits shall not be issued or renewed for possession, manufacture, storage, handling, sale or use of the following materials and such materials currently in storage or use shall be disposed of in an *approved* manner.

1. Liquid nitroglycerin.
2. Dynamite containing more than 60-percent liquid *explosive* ingredient.
3. Dynamite having an unsatisfactory absorbent or one that permits leakage of a liquid *explosive* ingredient under any conditions liable to exist during storage.
4. Nitrocellulose in a dry and uncompressed condition in a quantity greater than 10 pounds (4.54 kg) of net weight in one package.
5. Fulminate of mercury in a dry condition and fulminate of all other metals in any condition except as a component of manufactured articles not hereinafter forbidden.
6. *Explosive* compositions that ignite spontaneously or undergo marked decomposition, rendering the products of their use more hazardous, when subjected for 48 consecutive hours or less to a temperature of 167°F(75°C).
7. New *explosive materials* until *approved* by DOTn, except that permits are allowed to be issued to educational, governmental or industrial laboratories for instructional or research purposes.
8. *Explosive materials* condemned by DOTn.
9. *Explosive materials* containing an ammonium salt and a chlorate.
10. *Explosives* not packed or marked as required by DOTn
49 CFR, Parts 100-185.

Exception: Gelatin dynamite.

3301.3.2 Prohibited activities. The following activities are prohibited:

1. The manufacture, assembly and testing of explosives, ammunition, blasting agents and fireworks.

Exceptions:

1. The hand loading of small arms ammunition prepared for personal use and not offered for sale.
2. The mixing and loading of blasting agents at blasting sites in accordance with NFPA495.
3. The use of binary explosives or plosphoric materials in blasting or pyrotechnic special effects applications in accordance with NFPA 495 or 1126.

2. The storage of explosive materials for more than 24 hours unless under permit from the Seattle Fire Department.
3. The construction of Class 1 magazines.

***

3305.1 General. The manufacture, assembly and testing of *explosives*, ammunition, blasting agents and fireworks ((~~shall comply with the requirements of this section and NFPA 495 or NFPA 1124.~~)) are prohibited.

Exceptions:

1. The hand loading of small arms ammunition prepared for personal use and not offered for resale.
2. The mixing and loading of blasting agents at blasting sites in accordance with NFPA 495.
3. The use of binary *explosives* or plosophoric materials in blasting or pyrotechnic special effects applications in accordance with NFPA 495 or NFPA 1126.

***

3305.3 Intraplant separation of operating buildings. *Explosives* manufacturing buildings and fireworks manufacturing buildings, including those where *explosive* charges are assembled, manufactured, prepared or loaded utilizing Division 1.1, 1.2, 1.3, 1.4 or 1.5 *explosives*, shall be separated from all other buildings, including magazines, within the confines of the manufacturing plant, at a distance not less than those shown in Table 3305.3 or 3304.5.2(3), as appropriate. ((~~**Exception:** Fireworks manufacturing buildings separated in accordance with NFPA 1124.~~))

***

3305.4 Separation of manufacturing operating buildings from inhabited buildings, public traffic routes and magazines. When an operating building on an *explosive* materials plant site is designed to contain *explosive* materials, such a building shall be located away from inhabited buildings, public traffic routes and magazines in accordance with Table 3304.5.2(2) or 3304.5.2(3) as appropriate, based on the maximum quantity of *explosive* materials permitted to be in the building at one time (see Section 3301.8).
((~~**Exception:** Fireworks manufacturing buildings constructed and operated in accordance with NFPA 1124.~~))

***

3305.5 Buildings and equipment. Buildings or rooms that exceed the *maximum allowable quantity per control area* of *explosive materials* shall be operated in accordance with this section

and constructed in accordance with the requirements of the *International Building Code* for Group H occupancies.
((~~**Exception:** Fireworks manufacturing buildings constructed and operated in accordance with NFPA 1124.~~))

***

SECTION 3306
SMALL ARMS AMMUNITION, MODEL ROCKET MOTORS, AND MARINE FLARES

3306.1 General. Indoor storage and display of black powder, smokeless propellants and small arms ammunition shall comply with this section and NFPA 495. Indoor display of model rocket motors and marine flares shall comply with this section.

***

3306.5.1.2 Black powder. No ((~~more than 1 pound (0.454 kg) of~~))black powder shall be displayed in Group M occupancies.

3306.5.1.3 Small arms primers. No more than 10,000 small arms primers shall be displayed in Group M occupancies.

3306.5.1.4 Model rocket motors. Model rocket motors on display in Group M Occupancies shall not exceed an individual motor weight of 1 pound (0.45 kg). The maximum aggregate motor weight on display shall not exceed 20 pounds (9.1 kg). Model rocket motors shall be located a minimum of 15 feet (4572 mm) from exits.

3306.5.1.5 Marine flares. U.S. Coast Guard approved marine flares on display in Group M Occupancies shall not exceed an individual device weight of 2 pounds (0.90 kg). The maximum aggregate device weight on display shall not exceed 40 pounds (18.2 kg). Marine flares shall be located a minimum of 15 feet (4572 mm) from exits.

3306.5.1.5 Point of Information
Device weight of U.S. Coast Guard approved marine flares means the gross weight of the smokeless propellant, other chemical components and the primary casing of the flare. The device weight is not to include carrying cases, manufacturer's packaging, detachable handles or unattached activating devices that may also be present and sold with the flare as a unit.

3306.5.2 Storage. Storage of small arms ammunition shall comply with Sections 3306.5.2.1 through 3306.5.2.3.

3306.5.2.1 Smokeless propellant. Commercial stocks of smokeless propellants shall be stored as follows:

1. Quantities exceeding 20 pounds (9 kg), but not exceeding 100 pounds (45 kg) shall be stored in portable wooden boxes having walls of at least 1 inch (25 mm) nominal thickness.
2. Quantities exceeding 100 pounds (45 kg), but not exceeding ((~~800~~))400 pounds (((~~363~~))181.5 kg), shall be stored in nonportable storage cabinets having walls at least 1 inch (25 mm) nominal thickness. Not more than ((~~400~~))200 pounds
(((~~182~~))91 kg) shall be stored in any one cabinet, and cabinets shall be separated by a distance of at least 25 feet (7620 mm) or by a fire partition having a fire-resistance rating of at least 1 hour.
3. Storage of quantities exceeding ((~~800~~))400 pounds (((~~363~~))181.5 kg), but not exceeding 5,000 pounds (2270 kg) in a building shall comply with all of the following:

3.1. The warehouse or storage room is unaccessible to unauthorized personnel.

3.2. Smokeless propellant shall be stored in nonportable storage cabinets having wood walls at least 1 inch (25 mm) nominal thickness and having shelves with no more than 3 feet (914 mm) of separation between shelves.

3.3. No more than ((~~400~~))200 pounds (((~~182~~))91 kg) is stored in any one cabinet.

3.4. Cabinets shall be located against walls of the storage room or warehouse with at least 40 feet (12 192 mm) between cabinets.

3.5. The minimum required separation between cabinets shall be 20 feet (6096 mm) provided that *barricades* twice the height of the cabinets are attached to the wall, midway between each cabinet. The *barricades* must extend a minimum of 10 feet (3048 mm) outward, be firmly attached to the wall and be constructed of steel not less than 1/4 inch thick (6.4 mm), 2-inch (51 mm) nominal thickness wood, brick or concrete block.

3.6. Smokeless propellant shall be separated from materials classified as *combustible liquids*, flammable liquids, flammable solids or oxidizing materials by a distance of 25 feet (7620 mm) or by a *fire partition* having a *fire-resistance rating* of 1 hour.

3.7. The building shall be equipped throughout with an *automatic sprinkler system* installed in accordance with Section 903.3.1.1.

4. Smokeless propellants not stored according to Item 1, 2, or 3 above shall be stored in a Type 2 or 4 magazine in accordance with Section 3304 and NFPA 495.

3306.5.2.2 Black powder. Commercial stocks of black powder in quantities less than 5((~~0~~)) pounds (((~~23~~))2.3 kg) shall be allowed to be stored in Type 2 or 4 indoor or outdoor magazines. Quantities greater than 5((~~0~~)) pounds (((~~23~~))2.3 kg) shall be stored in outdoor Type 2 or 4 magazines. When black powder and smokeless propellants are stored together in the same magazine, the total quantity shall not exceed that permitted for black powder.

3306.5.2.3 Small arms primers. Commercial stocks of small arms primers shall be stored as follows:
1. Quantities not to exceed ((~~750,000~~))20,000 small arms primers stored in a building shall be arranged such that not more than ((~~100,000~~))20,000 small arms primers are stored in any one pile and piles are at least 15 feet (4572 mm) apart.

2. Quantities exceeding ((~~750,000~~))20,000 small arms primers stored in a building shall comply with all of the following:

2.1. The warehouse or storage building shall not be accessible to unauthorized personnel.

2.2. Small arms primers shall be stored in cabinets. No more than ((~~200,000~~))20,000 small arms primers shall be stored in any one cabinet.

2.3. Shelves in cabinets shall have vertical separation of at least 2 feet (610 mm).

2.4. Cabinets shall be located against walls of the warehouse or storage room with at least 40 feet (12 192 mm) between cabinets. The minimum required separation between cabinets shall be allowed to be reduced to 20 feet (6096 mm) provided that *barricades* twice the height of the cabinets are attached to the wall, midway between each cabinet. The *barricades* shall be firmly attached to the wall and shall be constructed of steel not less than 1/4 inch thick (6.4 mm), 2-inch (51 mm) nominal thickness wood, brick or concrete block.

2.5. Small arms primers shall be separated from materials classified as *combustible liquids*, flammable liquids, flammable solids or oxidizing materials by a distance of 25 feet (7620 mm) by a *fire partition* having a *fire-resistance rating* of 1 hour.

2.6. The building shall be protected throughout with an *automatic sprinkler system* installed in accordance with Section 903.3.1.1.

3. Small arms primers not stored in accordance with Item 1 or 2 of this section shall be stored in a magazine meeting the requirements of Section 3304 and NFPA 495.

***

SECTION 3308
FIREWORKS DISPLAY

3308.1 General. The sale, possession, use or discharge of fireworks and pyrotechnic special effects in the City of Seattle is prohibited except where authorized by a fire department permit or exempted under this section.

Exceptions:

1. The use of fireworks by railroads or other transportation agencies for signaling or illumination.
2. The sale or use of blank cartridges or fireworks if *approved* by the *fire code official* for theatrics, signaling or ceremonial purposes.
3. The use of fireworks by the United States Armed Forces.

Outdoor fireworks displays, use of pyrotechnics before a *proximate audience* and pyrotechnic special effects in motion picture, television, theatrical and group entertainment productions shall comply with Sections 3308.2 through 3308.10 and NFPA 1123 or NFPA 1126.

3308.2 Permit application. Prior to issuing permits for a fireworks display, plans for the fireworks display, inspections of the display site and demonstrations of the display operations

shall be *approved*. A plan establishing procedures to follow and actions to be taken in the event that a shell fails to ignite in, or discharge from, a mortar or fails to function over the fallout area or other malfunctions shall be provided to the *fire code official*.

No person under 18 years of age may apply for or receive a permit under this section.

An application for a permit shall be made in writing to the *fire code official* at least 30 days in advance of the display. At the time the permit application is submitted, the *fire code official* shall be consulted regarding requirements for standby fire apparatus.

***

3308.4 Clearance. Spectators, spectator parking areas, and *dwellings*, buildings or structures shall not be located within the display site.
Exception((s)):
((~~1.~~)) This provision shall not apply to pyrotechnic special effects and fireworks displays using Division 1.4G materials before a *proximate audience* in accordance with NFPA 1126.
((~~2. This provision shall not apply to unoccupied *dwellings*, buildings and structures with the approval of the building *owner* and the *fire code official*.~~))

3308.4.1 Display site. The radius of the display site for outdoor water or land displays shall be at least 100 foot per inch (1200 per mm) based on the internal mortar diameter of the largest aerial shell to be fired.

The designated landing areas shall be an approved large, clear, open area. Spectators, vehicles and combustible materials shall not be allowed within the designated landing area. The designated landing area shall not be within 100 feet (30 480 mm) of tents and membrane structures. The firing and storage site shall be located not less than 200 feet (60 960 mm) from a building, tent or membrane structure.

When the display is fired from a barge, such barge shall be of noncombustible construction or have a noncombustible surface.

When the display is fired from a barge or vessel, a security area shall be established around the barge to prevent boats from entering the area. No boats shall be allowed within 200 feet (60 960 mm) of the firing or storage site. A boat shall be on standby to remove personnel from the barge or water in an emergency. All personnel aboard the barge shall have approved flotation devices.

Additional water-filled fire extinguishers, rated 2-A minimum, shall be on the barge and so spaced that an extinguisher shall be available within 30 feet (9144 mm) at all times.

***

Section 26. Chapter 34 of the 2009 International Fire Code is amended as follows:

***

3401.2 Nonapplicability. This chapter shall not apply to liquids as otherwise provided in other laws or regulations or chapters of this code, including:

1. Specific provisions for flammable liquids in motor fuel-dispensing facilities, repair garages, airports and marinas in Chapter 22.
2. Medicines, foodstuffs, cosmetics, and commercial, institutional and industrial products in the same concentration and packaging containing not more than 50 percent by volume of water-miscible liquids and with the remainder of the solution not being flammable, and alcoholic beverages in retail or wholesale sales or storage uses when packaged in individual containers not exceeding 1.3 gallons (5 L).
3. Storage and use of fuel oil in tanks and containers connected to ((~~oil~~))fuel-burning equipment. Such storage and use shall be in accordance with Section 603. For abandonment of fuel oil tanks, this chapter applies.
4. Refrigerant liquids and oils in refrigeration systems (see Section 606).
5. Storage and display of aerosol products complying with Chapter 28.
6. Storage and use of liquids that have no fire point when tested in accordance with ASTM D 92.
7. Liquids with a *flash point* greater than 95°F (35°C) in a water-miscible solution or dispersion with a water and inert (noncombustible) solids content of more than 80 percent by weight, which do not sustain combustion.
8. Liquids without *flash points* that can be flammable under some conditions, such as certain halogenated hydrocarbons and mixtures containing halogenated hydrocarbons.
9. The storage of distilled spirits and wines in wooden barrels and casks.

***

3401.4 Permits. Permits shall be required as set forth in Sections 105.6 and 105.7.

Exception: Pursuant to Section 106.5.1, permits issued by the Department of Ecology to install underground tanks are *approved* by the *fire code official*.

***

3402.1 Definitions. The following words and terms shall, for the purposes of this chapter and as used elsewhere in this code, have the meanings shown herein.

* * *

VAULT. An enclosure consisting of four walls, a floor and a top for the purpose of containing a liquid storage tank and not intended to be occupied by personnel other than for inspection, repair or maintenance of the vault, the storage tank or related equipment. [NFPA 30: 3.3.55]

***

3404.2.7.4 Emergency venting.

3404.2.7.4.1 General.

Stationary, aboveground tanks shall be equipped with additional venting that will relieve excessive internal pressure caused by exposure to fires. Emergency venting devices shall be listed or approved. ((~~Emergency vents for Class I, II and IIIA liquids shall not discharge inside buildings.~~)) The venting shall be installed and maintained in accordance with Section 22.7 of NFPA 30.

The requirement for additional venting applies to each compartment of a compartmentalized tank, the interstitial space (annulus) of a secondary containment- type tank and the enclosed space of tanks of closed-top dike construction. The requirement for additional venting also applies to spaces or enclosed volumes, such as those intended for insulation, membranes or weather shields that can contain liquid because of a leak from the primary vessel and that can inhibit venting during fire exposure. The insulation, membrane or weather shield shall not interfere with emergency venting.

Exception: Tanks larger than 12,000 gallons (45 420 L) in capacity storing Class IIIB liquids which are not within the diked area or the drainage path of Class I or II liquids do not require emergency relief venting.

3404.2.7.4.2 Emergency vent pipe outlets. Emergency vents for Class I, II and IIIA liquids shall not discharge inside buildings, and outlets shall be in accordance with Section 3404.2.7.3.3.

Exception: Protected above-ground tanks located inside buildings containing Class II or Class IIIA liquids for emergency or standby generators installed in accordance with the Administrative Rule 34.01.04, *Use of Protected Aboveground Tanks for Fuel Storage Inside Buildings* and any future revisions of this rule adopted by the *fire code official*, are allowed to vent inside buildings.

3404.2.7.4.3 Extension of emergency vent piping. Piping to or from approved emergency vent devices for atmospheric and low-pressure tanks shall be sized to provide emergency vent flows that limit the back pressure to less than the maximum pressure permitted by the design of the tank. Piping to or from approved emergency vent devices for pressure vessels shall be sized in accordance with the ASME *Boiler and Pressure Vessel Code*.

***

3404.2.7.5.6 Location of connections that are made or broken. Filling, withdrawal and vapor recovery connections for Class I, II and IIIA liquids which are made and broken shall be located outside of buildings, not more than 5 feet (1524 mm) above the finished ground level, in an *approved* location in close proximity to the parked delivery vehicle. Such location shall be away from sources of ignition and not less than 5 feet (1524 mm) away from building openings.

Such connections shall be closed and liquid tight when not in use and shall be properly identified.

Exception: Fill connections for diesel fuel tanks attached to emergency generators may be located within dedicated loading docks of buildings if installed within 10 feet (3048 mm) of the exterior opening of the loading dock and if the loading dock entrance doors have openings comprising at least 50 percent of the door area.

***

3404.2.7.10.1 Leaking tank disposition. Leaking tanks shall be promptly emptied, repaired and returned to service, abandoned or removed in accordance with Section 3404.2.13 or 3404.2.14 and in accordance with WAC 173-360-325.

3404.2.7.11 Tank lining. Steel tanks are allowed to be lined only for the purpose of protecting the interior from corrosion or providing compatibility with a material to be stored. Only those liquids tested for compatibility with the lining material are allowed to be stored in lined tanks.

Tank lining shall be conducted in accordance with the applicable provisions of NFPA 326, *Standard for the Safeguarding of Tanks and Containers for Entry, Cleaning and Repair* and WAC 173-360-325.

***

3404.2.9.2 Fire protection. Fire protection for aboveground tanks shall comply with Sections 3404.2.9.2.1 through 3404.2.9.2.4.

Above-ground tanks located outside buildings and used for the storage of Class I flammable liquids shall be protected with an approved foam fire protection system.

Exception: *Protected above-ground tanks.*

***

3404.2.9.5 Above-ground tanks inside of buildings.

3404.2.9.5.1 Overflow prevention. Tanks storing Class I, II and IIIA liquids inside buildings shall be equipped with a device or other means to prevent overflow into the building including, but not limited to: a float valve; a preset meter on the fill line; a valve actuated by the weight of the tank's contents; a low-head pump that is incapable of producing overflow; or a liquid-tight overflow pipe at least one pipe size larger than the fill pipe and discharging by gravity back to the outside source of liquid or to an *approved* location.

Tanks containing Class IIIB liquids and connected to fuel-burning equipment shall be provided with a means to prevent overflow into buildings in accordance with Section 3404.2.7.5.8.

3404.2.9.5.2 Maximum quantity allowed outside of a liquid storage room. Above-ground storage tanks storing Class I, II and IIIA liquids inside buildings in quantities exceeding the maximum allowable quantity per control area set forth in Table 2703.1.1(1) shall be confined to a liquid storage room constructed and separated as required by the *Seattle Building Code* and complying with Section 3404.3.7.

Exception: Protected above-ground tanks containing Class II or IIIA liquids in accordance with Administrative Rule 34.01.04, *Use of Protected Above-ground Tanks for Fuel Storage Inside Buildings* and any future revisions of this rule adopted by the *fire code official*.

3404.2.9.5.3 Maximum quantity allowed within a liquid storage room. The maximum aggregate quantity of flammable and combustible liquids in aboveground storage tanks allowed inside a building within a liquid storage room constructed and separated as required by the *Seattle Building Code* and complying with Section 3404.3.7 is limited to 20,000 gallons (75 700 L).

3404.2.9.6 Above-ground tanks outside of buildings. Above-ground tanks outside of buildings shall comply with Sections 3404.2.9.6.1 through 3404.2.9.6.3.

3404.2.9.6.1 Locations where above-ground tanks are prohibited or quantity limits are established. Storage of Class I and II liquids in above-ground tanks outside of buildings is prohibited within the limits established ((~~by law as the limits of districts in which such storage is prohibited (see Section 3 of the Sample Ordinance for Adoption of the *International Fire Code* on page v).~~))in Table 3404.2.9.6.1-A.

TABLE 3404.2.9.6.1-A
QUANTITY RESTRICTIONS FOR ABOVE-GROUND STORAGE TANKS USED FOR DISPENSING INTO EQUIPMENT

TYPE OF LIQUID	MAXIMUM PRIMARY TANK CAPACITY		
	LOCATION OF TANK		
	Within Fire District	Within I-zone[a,b]	Outside I-zone[a,b]
Class I liquids	Prohibited	1,000 gallons[c]	500 gallons[c]
Class II liquids for open use	660 gallons[c]	1,000 gallons[c]	660 gallons[c]

Combination of Class I and Class II liquids in compartmentalized tanks for open use	Prohibited	3,000 gallons[c,d]	1,000 gallons[c,d]
Class II liquids outside for closed use (e.g. emergency generators)	2,000 gallons[c]	4,000 gallons[c]	2,000 gallons[c]

For SI: 1 foot = 304.8 mm, 1 gallon = 3.785 L
a. I-zone means Industrial zones identified in accordance with the City Land Use Code.
b. Additional tanks are allowed on the same site if separated from one another by a minimum of 100 feet.
c. Maximum tank capacities are allowed to be doubled if *protected aboveground tanks* in accordance with the requirements of this chapter have been provided.
d. Maximum individual compartment capacities shall not exceed the maximum allowable primary tank capacity for the class of liquid.

***

3404.2.11 Underground tanks. Underground storage of flammable and *combustible liquids* in tanks shall comply with Section 3404.2 and Sections 3404.2.11.1 through 3404.2.11.5.2. Pursuant to Section 106.5.1, the *fire code official approves* permits to install underground tanks issued by and inspections of underground tanks conducted by the Washington State Department of Ecology.

***

3404.2.13 Abandonment and status of tanks. Tanks taken out of service shall be removed in accordance with Section 3404.2.14, or safeguarded in accordance with Sections 3404.2.13.1 through 3404.2.13.2.3 and API 1604. Residential heating oil tanks required by this code to be removed or decommissioned shall also comply with Administrative Rule 34.02.07, *Decommissioning Residential Heating Oil Tanks* and any future revisions of this rule adopted by the *fire code official*.

***

3404.2.13.1.4 Tanks abandoned in place. Tanks abandoned in place shall be as follows:
1. Flammable and *combustible liquids* shall be removed from the tank and connected piping.
2. The suction, inlet, gauge, vapor return and vapor lines shall be disconnected.
3. The tank shall be filled completely with an *approved* inert solid material.
   Exception: Residential heating oil tanks of 1,100 gallons (4164 L) or less if the fill line is permanently removed to a point below grade to prevent refilling of the tank.
4. Remaining underground piping shall be capped or plugged.
5. A record of tank size, location and date of abandonment shall be retained.

6. All exterior above-grade fill piping shall be permanently removed when tanks are abandoned or removed.

***

3404.3.1.1 Approved containers. Only *approved* containers and portable tanks shall be used.

It shall be unlawful to sell, offer for sale or distribute any container for the storage and/or use of flammable liquids, unless such container has been approved for such purpose under applicable provisions of this code.

***

3404.3.4.4 Liquids for maintenance and operation of equipment. In all occupancies, quantities of flammable and *combustible liquids* in excess of 10 gallons (38 L) used for maintenance purposes and the operation of equipment shall be stored in liquid storage cabinets in accordance with Section 3404.3.2. Quantities not exceeding 10 gallons (38 L) are allowed to be stored outside of a cabinet when in *approved* containers located in private garages or other *approved* locations.

In Groups A, B, E, F, I, M, R and S occupancies, quantities of flammable and combustible liquids used for demonstration, treatment and laboratory work exceeding 10 gallons (37.85 L) shall be stored in liquid storage cabinets in accordance with Section 3404.3.2. Quantities not exceeding 10 gallons (38 L) shall be in approved containers in approved locations.

3404.3.5 Storage in control areas. Storage of flammable and *combustible liquids* in *control areas* shall be in accordance with Sections 3404.3.5.1 through 3404.3.5.4.

3404.3.5.1 Basement storage. Class I liquids shall be allowed to be stored in *basements* ((~~in amounts not exceeding the *maximum allowable quantity per control area* for use-*open systems* in Table 2703.1.1(1), provided that automatic suppression and other fire protection are provided in accordance with Chapter 9.~~)) protected throughout by an *approved* automatic sprinkler system required in accordance with Chapter 9. The maximum aggregate quantity of all combined Class I flammable liquids in a basement shall not exceed 30 gallons (113.5 L) and Class IA flammable liquids shall not exceed 10 gallons (37.85 L).
Quantities of Class I flammable liquids in basements in excess of 10 gallons shall be stored in *approved* liquid storage cabinets in accordance with Section 3404.3.2.
Exception: Class I liquids stored and used in basement areas of research laboratories in accordance with Administrative Rule 34.03.04, *Flammable Liquid Storage and Use in Basement Level Laboratories* and any future revisions of this rule adopted by the *fire code official*.

Class II and IIIA liquids shall also be allowed to be stored in *basements*, provided that automatic suppression and other fire protection are provided in accordance with Chapter 9.

***

3404.3.6.1 Container type. Containers for Class I liquids shall be metal.
Exception: In sprinklered buildings, an aggregate quantity of 120 gallons (454 L) of water-miscible Class IB and Class IC liquids is allowed in nonmetallic containers, each having a capacity of 16 ounces (0.473 L) or less.

Plastic containers may be used for Class II and III liquids only if individual containers are:

1. Stored less than 5 feet (1524 mm) high; or
2. Confined to box bins protected by automatic sprinklers within racks.

***

3404.3.7.3 Spill control and secondary containment. Liquid storage rooms shall be provided with spill control and secondary containment in accordance with Section 2704.2.

3404.3.7.3 Point of Information

If secondary containment of nonwater-miscible flammable or combustible liquids is to be achieved through the use of recessed floors or liquid-tight sills as allowed for in Section 2704.2, the room must be protected by an automatic-foam system in accordance with Section 3404.3.7.5.1.

3404.3.7.4 Ventilation. Liquid storage rooms shall be ventilated in accordance with Section 2704.3.

3404.3.7.5 Fire protection. Fire protection for liquid storage rooms shall comply with Sections 3404.3.7.5.1 and 3404.3.7.5.2.

If secondary containment of nonwater-miscible flammable or combustible liquids is achieved through the use of recessed floors or liquid-tight sills as allowed for in Section 2704.2, an automatic foam system shall be provided in the room and must be approved by the *fire code official*.

3404.3.7.5 Point of Information

Nonwater-miscible flammable and combustible liquids are those flammable and combustible liquids that are unable to dissolve uniformly with water. Whether a flammable or combustible liquid is soluble with water is dependent on the chemical nature of the liquid. A source of information regarding the water solubility of common flammable and combustible liquids can be found in NFPA 325M.

***

3404.3.8.2 Spill control and secondary containment. Liquid storage warehouses shall be provided with spill control and secondary containment as set forth in Section 2704.2.

3404.3.8.2 Point of Information

If secondary containment of nonwater-miscible flammable or combustible liquids is to be achieved through the use of recessed floors or liquid-tight sills as allowed for in Section 2704.2, the room must be protected by an automatic-foam system in accordance with Section 3404.3.7.5.1.

***

3404.3.8.4 Fire-extinguishing systems. Liquid storage warehouses shall be protected by *automatic sprinkler systems* installed in accordance with Chapter 9 and Tables 3404.3.6.3(4) through 3404.3.6.3(7) and Table 3404.3.7.5.1, or Section 16.4 and Tables 16.5.2.1 through 16.5.2.6 of NFPA 30. In-rack sprinklers shall also comply with NFPA 13. Automatic foam-water systems and automatic AFFF water sprinkler systems shall not be used except when *approved*. Protection criteria developed from fire modeling or full-scale fire testing conducted at an *approved* testing laboratory are allowed in lieu of the protection as shown in Tables 3404.3.6.3(2) through 3404.3.6.3(7) and Table 3404.3.7.5.1 when *approved*.

If secondary containment of nonwater-miscible flammable or combustible liquids is achieved through the use of recessed floors or liquid-tight sills as allowed for in Section 2704.2, an automatic foam system shall be provided throughout the warehouse and shall be *approved* by the *fire code official*.

***

3405.4 Solvent distillation units. Solvent distillation units shall comply with Sections 3405.4.1 through 3405.4.9.

3405.4.1 Unit with a capacity of 60 gallons or less. Solvent distillation units used to ((~~recycle~~))process Class I, II or IIIA liquids having a distillation chamber capacity of 60 gallons (227 L) or less shall be *listed*, *labeled* and installed in accordance with Section 3405.4 and UL 2208.

Exceptions:

1. Solvent distillation units installed in dry cleaning plants in accordance with Chapter 12.
2. Solvent distillation units used in continuous through-put industrial processes where the source of heat is remotely supplied using steam, hot water, oil or other heat transfer fluids, the temperature of which is below the auto-ignition point of the solvent.

((~~3. Solvent distillation units *listed* for and used in laboratories.~~))

((~~4.~~))3. Custom and noncommercial solvent distillation units that are ((~~a~~))*pproved* by the *fire code official* for research, testing and experimental processes.

4. Solvent distillation units installed or in service prior to September 27, 1998 if in accordance with Sections 3405.4.10.1 through 3405.4.10.6.

***

3405.4.10 Existing units.

3405.4.10.1 General. Solvent distillation units installed or placed in service prior to September 27, 1998 shall be in accordance with Section 3405.4.10.

Exceptions:

1. Existing commercially produced high purity column stills with a chamber capacity of 60 gallons (227 L) or less that are constructed of UL or CSA approved components and provided with an enclosed cabinet, mechanical ventilation, and microprocessor control. Such units shall be located in a laboratory or similar controlled environment approved by the *fire code official*, maintained at least 3 feet (914 mm) from ignition sources, and separated from exit ways by 1-hour fire-resistant construction.
2. Existing commercially produced solvent distillation units, including glass apparatus and electric heating mantels, with a chamber capacity of 1.5 liters (0.4 gal.) or less that are used for research, testing and experimental purposes in a laboratory setting or similar controlled environment.

3405.4.10.1 Point of Information

For solvent distillation units installed or placed in service after September 27, 1998, see Sections 3405.4.1 through 3405.4.9.

3405.4.10.2 Listing. Solvent distillation units used to process Class I, II or IIIA liquids shall be listed in accordance with the *Seattle Electrical Code* for Class 1, Division 1 or 2 hazardous locations.

Exception: If approved by the *fire code official*, existing commercially produced units having a chamber capacity of 60 gallons (227 L) or less separated from exits and exit ways by 1-hour fire-resistant construction and located at least 3 feet (914 mm) away from ignition sources.

3405.4.10.2 Point of Information

For solvent distillation units installed or placed in service after September 27, 1998, see Sections 3405.4.1 through 3405.4.9.

3405.4.10.3 Location. Solvent distillation units shall not be used in basements. Units processing Class I, II or IIIA liquids, having a distillation capacity exceeding 60 gallons (227 L) shall be used in locations that comply with the use and mixing requirement of Section 3405 and other applicable provisions in Chapter 34.

3405.4.10.4 Overfill protection. A means to automatically interrupt distillation and prevent collection containers and portable tanks from overfilling, or an overfill containment pan sized to contain the entire capacity of the distillation chamber shall be provided.

3405.4.10.5 Safety limit controls. Safety limit controls that shut off the unit in the event of a malfunction that increases the risk of fire or explosion shall be provided.

3405.4.10.6 Maximum temperature. The maximum temperature of the unit distillation chamber shall not exceed the autoignition temperature of the liquid being distilled.

3405.4.11 Units installed outdoors. Solvent distillation units installed outdoors shall be in accordance with Sections 3405.4.7 through 3405.4.10 and the following:

Units shall be located a minimum of 15 feet (4572 mm) from public ways, property lines, combustible construction and openings to buildings.

Spill control is required around the unit in accordance with Section 2704.2.

An attendant is required while the unit is in operation.

The unit shall be empty if unattended or shut down and the area secured in an approved manner.

***

3406.5.4.5 Commercial, industrial, governmental or manufacturing. Dispensing of Class II and III motor vehicle fuel from tank vehicles into the fuel tanks of motor vehicles located at commercial, industrial, governmental or manufacturing establishments is allowed where permitted, provided such dispensing operations are conducted in accordance with the following:
1. Dispensing shall occur only at sites that have been issued a permit to conduct mobile fueling.

2. The *owner* of a mobile fueling operation shall provide to the jurisdiction a written response plan which demonstrates readiness to respond to a fuel spill and carry out appropriate mitigation measures, and describes the process to dispose properly of contaminated materials.

3. A detailed site plan shall be submitted with each application for a permit. The site plan shall indicate: all buildings, structures and appurtenances on site and their use or function; all uses adjacent to the property lines of the site; the locations of all storm drain openings, adjacent waterways or wetlands; information regarding slope, natural drainage, curbing, impounding and how a spill will be retained upon the site property; and the scale of the site plan.

Provisions shall be made to prevent liquids spilled during dispensing operations from flowing into buildings or off-site. Acceptable methods include, but shall not be limited to, grading driveways, raising doorsills or other *approved* means.

4. The *fire code official* is allowed to impose limits on the times and days during which mobile fueling operations is allowed to take place, and specific locations on a site where fueling is permitted.

5. Mobile fueling operations shall be conducted in areas not accessible to the public or shall be limited to times when the public is not present.

6. Mobile fueling shall not take place within 15 feet (4572 mm) of buildings, property lines, combustible storage or storm drains.

Exceptions:

1. The distance to storm drains shall not apply where an *approved* storm drain cover or an *approved* equivalent that will prevent any fuel from reaching the drain is in place prior to fueling or a fueling hose being placed within 15 feet (4572 mm) of the drain. Where placement of a storm drain cover will cause the accumulation of excessive water or difficulty in conducting the fueling, such cover shall not be used and the fueling shall not take place within 15 feet (4572 mm) of a drain.
2. The distance to storm drains shall not apply for drains that direct influent to *approved* oil interceptors.

7. The tank vehicle shall comply with the requirements of NFPA 385 and local, state and federal requirements. The tank vehicle's specific functions shall include that of supplying fuel to motor vehicle fuel tanks. The vehicle and all its equipment shall be maintained in good repair.

8. Signs prohibiting smoking or open flames within 25 feet (7620 mm) of the tank vehicle or the point of fueling shall be prominently posted on three sides of the vehicle including the back and both sides.

9. A portable fire extinguisher with a minimum rating of 40:BC shall be provided on the vehicle with signage clearly indicating its location.

10. The dispensing nozzles and hoses shall be of an *approved* and *listed* type <u>and the inside diameter of the hose shall not exceed 11/4 inches (32mm)</u>.

11. The dispensing hose shall not be extended from the reel more than 100 feet (30 480 mm) in length.

All pressure hoses and couplings shall be inspected at intervals appropriate to the service. Any hose showing materials deterioration, signs of leakage or weakness in its carcass or at the couplings shall be withdrawn from service or repaired or discarded.

12. Absorbent materials, nonwater-absorbent pads capable of absorbing a minimum of 16 gallons (61 L), a 10-foot-long (3048 mm) containment boom, an *approved* container with lid and a nonmetallic shovel and a storm drain spill kit shall be provided to mitigate a minimum 5-gallon (19 L) fuel spill.

13. Tank vehicles shall be equipped with a "fuel limit" switch such as a count-back switch, to limit the amount of a single fueling operation to a maximum of 500 gallons (1893 L) before resetting the limit switch.

> **Exception:** Tank vehicles where the operator carries and can utilize a remote emergency shutoff device which, when activated, immediately causes flow of fuel from the tank vehicle to cease.

14. *Persons* responsible for dispensing operations shall be trained in the appropriate mitigating actions in the event of a fire, leak or spill. Training records shall be maintained by the dispensing company and shall be made available to the *fire code official* upon request.

15. Operators of tank vehicles used for mobile fueling operations shall have in their possession at all times an emergency communications device to notify the proper authorities in the event of an emergency.

16. The tank vehicle dispensing equipment shall be constantly attended and operated only by designated personnel who are trained to handle and dispense motor fuels.

17. Fuel dispensing shall be prohibited within 25 feet (7620 mm) of any source of ignition.

18. The engines of vehicles being fueled shall be shut off during dispensing operations.

19. Nighttime fueling operations shall only take place in adequately lighted areas.

20. The tank vehicle shall be positioned with respect to vehicles being fueled to prevent traffic from driving over the delivery hose.

21. During fueling operations, tank vehicle brakes shall be set, chock blocks shall be in place and warning lights shall be in operation.

22. Motor vehicle fuel tanks shall not be topped off.

23. The dispensing hose shall be properly placed on an *approved* reel or in an *approved* compartment prior to moving the tank vehicle.

24. The *fire code official* and other appropriate authorities shall be notified without delay by the fuel delivery operator ((~~when~~))if a reportable spill or unauthorized discharge occurs or if any spill or accidental release, inside or outside of a building, could present a fire or life safety hazard.

25. Operators shall place a drip pan or an absorbent pillow, in good condition, under each fuel fill opening prior to and during dispensing operations. Drip pans shall be liquid-tight. The pan or absorbent pillow shall have a capacity of not less than ((~~3~~))5 gallons (((~~11.36~~))19 L). Spills retained in the drip pan or absorbent pillow need not be reported.

Operators, when fueling, shall have on their *person* an absorbent pad capable of capturing diesel foam overfills. Except during fueling, the nozzle shall face upward and an absorbent pad shall be kept under the nozzle to catch drips. Contaminated absorbent pads or pillows shall be disposed of regularly in accordance with local, state and federal requirements.

26. It is the responsibility of the permit applicant to ensure that all persons and parties with an interest in the property (i.e., property owner, lessor, real-estate company, property manager as well as operators of the property) have given explicit consent to allow mobile fueling to occur on the property. Managers, lessees, renters and other persons cannot solely give permission for mobile fueling to occur on the property.

27. Fueling locations shall have a surface that will be protected by continuous pavement (cement or asphalt) that is in good repair. Good repair means that a surface has no cracks, holes or means through which a spill could reach soil.

Exception: Demonstration by the vehicle operator that the flow of fuel can be stopped from the farthest fueling location within 15 seconds.

***

Section 27. Chapter 38 of the 2009 International Fire Code is amended as follows:

CHAPTER 38
LIQUEFIED PETROLEUM GASES

SECTION 3801
GENERAL

3801.1 Scope. Storage, handling and transportation of liquefied petroleum gas (LP-gas) and the installation of LP-gas equipment pertinent to systems for such uses shall comply with this

chapter, NFPA 54, *National Fuel Gas Code* and NFPA 58, *Liquefied Petroleum Gas Code* as amended.

Exceptions:

1. LP-gas used with oxygen for hot work operations shall be in accordance with Chapter 26.
2. LP-gas used in connection with outdoor patio heaters shall be in accordance with Section 603.4.

Properties of LP-gases shall be determined in accordance with Appendix B of NFPA 58 as amended.

3801.1 Point of Information

Adopted local amendments to NFPA 58 can be accessed at http://www.seattle.gov/fire/FMO/firecode/nfpaAmendments.htm

***

3801.3 Construction documents. Where a single LP-gas container is more than ((~~2,000~~))500 gallons ((~~(7570 L)~~))(1892.5 L)in water capacity or the aggregate water capacity of LP-gas containers is more than ((~~4,000~~))1000 gallons ((~~(15 140 L)~~))(3785 L) and for all mounded or underground LP-gas containers, the installer shall submit *construction documents* to the *fire code official* for *approval* of ((~~for~~)) such installation ((~~prior to beginning the installation~~))before starting the installation.

***

3803.1 General. LP-gas equipment shall be installed in accordance with ((~~the *International*~~) NFPA 54, *National Fuel Gas Code* and NFPA 58 as amended, except as otherwise provided in this chapter.

***

3803.2.1 Portable containers. Portable LP-gas containers, as defined in NFPA 58 as amended, shall not be used in buildings except as specified in NFPA 58 as amended and Sections 3803.2.1.1 through 3803.2.1.7.

***

3803.2.1.2 Construction, renovation and temporary heating. Portable LP-gas containers are allowed to be used in buildings or areas of buildings undergoing construction, renovation or for temporary heating as set forth in Sections 6.19.4, 6.19.5 and 6.19.8 of NFPA 58 as amended.

Individual LP-gas container capacities and aggregate quantities of LP-gas allowed within buildings undergoing construction or renovation shall be in accordance with Table 3803.2.1.2.

TABLE 3803.2.1.2
USE OF LP-GAS INSIDE BUILDINGS UNDERGOING CONSTRUCTION or RENOVATION [1]

Location	Maximum Individual Container Capacity	Maximum Aggregate Quantity per Floor	Maximum Aggregate Quantity inside the Building
Within Occupied A Occupancies	Limits established by permit issued by Special Events Section		
Within Occupied Buildings other than A Occupancies	50 lbs. water capacity (nominal 20 lb LP-gas capacity)	Number of cylinders shall not exceed the number of workers assigned to use the LP-gas.	Number of cylinders shall not exceed the number of workers assigned to use the LP-gas.
Unoccupied Buildings	239 lbs. water capacity (nominal 100 lb LP-gas capacity)	735 lbs. water capacity (nominal 300 lb LP-gas capacity)	4410 lbs. water capacity (nominal 1800 lb LP-gas capacity)

[1] Weight of LP-gas per gallon = 4.20 lbs.

***

3803.2.1.4 Group B, E and I occupancies. In Group B, E and I laboratory occupancies, portable LP-gas containers are allowed to be used for research and experimentation. Such containers shall not be used in classrooms. Such containers shall not exceed a 50-pound (23 kg) water capacity in occupancies used for educational or research purposes and shall not exceed a 12-pound (5 kg) water capacity in occupancies used for institutional purposes. Where more than one such container is present in the same room, each container shall be separated from other containers by a distance of not less than 20 feet (6096 mm).

***

3803.2.1.7 Use for food preparation. Where *approved*, *listed* LP-gas commercial food service appliances are allowed to be used for food-preparation within restaurants and in attended commercial food-catering operations in accordance with NFPA 54, the ((~~*International*~~)) *National Fuel Gas Code*, the *International Mechanical Code* and NFPA58 as amended.

3803.2.2 Industrial vehicles and floor maintenance machines. LP-gas containers on industrial vehicles and floor maintenance machines shall comply with Sections 11.12 and 11.13 of NFPA 58 as amended.

3803.3 Location of equipment and piping. Equipment and piping shall not be installed in locations where such equipment and piping is prohibited by NFPA 54, the ((~~*International*~~)) *National Fuel Gas Code*.

3803.4 Use of LP-gas containers on roofs or exterior balconies. LP-gas containers on roofs or exterior balconies shall be in accordance with Sections 3803.4.1 through 3803.4.2.

3803.4.1 LP-gas containers on roofs of buildings. LP-gas containers are prohibited on the roofs of buildings and parking garages. [NFPA 58 6.6.7.1]

Exceptions:

1. Temporary installations at construction sites in accordance with Section 3803.5.
2. A single LP-gas container having an individual water capacity not exceeding 48 pounds [nominal 20 lb (9 kg) LP-gas] connected to a LP-gas grill.

3803.4.2 LP-gas containers on exterior balconies. LP-gas containers with a water capacity greater than 2.5 pounds (1 kg) shall not be located on decks or balconies above the first floor that are attached to a Group R-1 or R-2 Occupancy. [NFPA 58 6.19.11.2]

Exceptions:

1. LP-gas containers not exceeding a water capacity of 48 pounds (21.8 kg) [nominal 20 pounds (9 kg) LP-gas] may be used on balconies served by outside stairways if only such stairways are used to transport the container.
2. A single LP-gas container having an individual water capacity not exceeding 48 pounds (21.8 kg) [nominal 20 pounds (9 kg) LP-gas] connected to a LP-gas grill may be located on each exterior balcony of any occupancy except Group R-2 that is licensed by the Washington State Department of Health and Social Services or Washington State Department of Health, if a portable fire extinguisher having a minimum rating of 20-B is located within 30 feet (9144 mm) of the grill.

3803.5 Special uses of LP-gas outside of buildings. Individual container capacities and maximum aggregate quantities of LP-gas used for outdoor cooking, fueling equipment at construction sites, fueling tar kettles, fueling hot tar tank trucks and used in conjunction with torch-applied roofing operations shall be limited in accordance with Table 3803.5.

Portable LP-gas-fired heating appliances located outdoors are allowed in accordance with Section 603.4.2.

TABLE 3803.5

SPECIAL USES OF LP-GAS OUTSIDE OF BUILDINGS

Use/Activity	Location	Maximum Individual Container Capacity	Maximum Aggregate Quantity
Outdoor Cooking (except R-2 and R-3 where allowed)	Fire District	50 lbs. water capacity[1] (nominal 20 lbs. LP-gas capacity)	100 lbs.water capacity (nominal 40 lbs. LP-gas capacity)
	Elsewhere	50 lbs. water capacity (nominal 20 lbs. LP-gas capacity)	357 lbs. water capacity (nominal 150 lbs. LP-gas capacity)
Fueling Temporary Heating Equipment at Construction Sites	Fire District	Prohibited	Prohibited
	Elsewhere	500 gallons	500 gallons
Fueling Tar Kettles	Fire District	200 lbs. water capacity (nominal 84 lbs. LP-gas capacity)	400 lbs. water capacity (nominal 168 lbs. LP-gas capacity)
	Elsewhere	3024 lbs. water capacity (nominal 1260 lbs. LP-gas capacity)	3024 lbs. water capacity (nominal 1260 lbs. LP-gas capacity)
	On Roofs of Buildings	200 lbs. water capacity (nominal 84 lbs. LP-gas capacity)	400 lbs. water capacity (nominal 168 lbs. LP-gas capacity)
Fueling Hot Tar Tank Trucks	Fire District	200 lbs. water capacity (nominal 84 lbs. LP-gas capacity)	400 lbs. water capacity (nominal 168 lbs. LP-gas capacity)
	Elsewhere	500 gallons	500 gallons

Fueling Roofing Torches	Occupied Buildings	72 lbs. water capacity (nominal 30 lbs. LP-gas capacity)	300 lbs. water capacity (nominal 126 lbs. LP-gas capacity)
	Unoccupied Buildings	72 lbs. water capacity (nominal 30 lbs. LP-gas capacity)	605 lbs. water capacity (nominal 252 lbs. LP-gas capacity)

[1] When the LP-gas is separated from the public by a minimum of 30 feet, or by a noncombustible partition, the maximum allowable individual container size may be increased to 239 lbs. water capacity (nominal 100 lbs. LP-gas capacity) and the maximum allowable aggregate quantity may be increased to 1,000 lbs. water capacity (nominal 420 lbs. LP-gas capacity).

SECTION 3804
LOCATION OF LP-GAS CONTAINERS

3804.1 General. The storage and handling of LP-gas and the installation and maintenance of related equipment shall comply with NFPA58 as amended and be subject to the approval of the *fire code official*, except as provided in this chapter.

3804.2 Maximum capacity within established limits. ((~~Within the limits established by law restricting the storage of liquefied petroleum gas for the protection of heavily populated or congested areas, the aggregate capacity of any one installation shall not exceed a water capacity of 2,000 gallons (7570 L) (see Section 3 of the Sample Ordinance for Adoption of the *International Fire Code* on page xiii).~~
~~**Exception:**~~ **))**In particular installations, ((~~this~~)) the location and capacity limit of LP-gas installations ((~~shall~~))may be determined by the *fire code official*, after consideration of special features such as topographical conditions, nature of occupancy, and proximity to buildings, capacity of proposed LP-gas containers, degree of fire protection to be provided, proximity to residential, educational and institutional occupancies and other high-risk areas and capabilities of the local fire department.

3804.2.1 Fire District restrictions. Storage and use of LP-gas containers having an individual capacity in excess of 239 pounds (108.4 kg) water capacity [nominal 100 pounds (48.3 kg) LP-gas] and all stationary installations are prohibited in the *Fire District*.
Exception: Containers and stationary installations up to 500 gallons (1892 L) LP-gas capacity west of Alaskan Way.

***

3804.3.1 Special hazards. LP-gas containers shall also be located with respect to special hazards including, but not limited to, above-ground flammable or *combustible liquid* tanks,

oxygen or gaseous hydrogen containers, flooding or electric power lines as specified in Section 6.4.5 of NFPA 58 as amended.

3804.4 Multiple LP-gas container installations. Multiple LP-gas container installations with a total water storage capacity o more than 180,000 gallons (681 300 L) [150,000-gallon (567 750 L) LP-gas capacity] shall be subdivided into groups containing not more than 180,000 gallons (681 300 L) in each group. Such groups shall be separated by a distance of not less than 50 feet (15 240 mm), unless the containers are protected in accordance with one of the following:
1. Mounded in an *approved* manner.
2. Protected with *approved* insulation on areas that are subject to impingement of ignited gas from pipelines or other leakage.
3. Protected by firewalls of *approved* construction.
4. Protected by an *approved* system for application of water as specified in Table 6.4.2 of NFPA 58 as amended.
5. Protected by other *approved* means.

Where one of these forms of protection is provided, the separation shall not be less than 25 feet (7620 mm) between LP-gas container groups.

***

3806.2 Overfilling. LP-gas containers shall not be filled or maintained with LP-gas in excess of either the volume determined using the fixed liquid-level gauge installed by the manufacturer or the weight determined by the required percentage of the water capacity marked on the container. Portable LP-gas containers shall not be refilled unless equipped with an overfilling prevention device (OPD) where required by Section 5.7.3 of NFPA 58 as amended.

3806.3 Dispensing locations. The point of transfer of LP-gas from one LP-gas container to another shall be separated from exposures as specified in NFPA 58 as amended.

***

3807.2 Smoking and other sources of ignition. "No Smoking" signs complying with Section 310 shall be posted when required by the *fire code official*. Smoking within 25 feet (7620 mm) of a point of transfer, while filling operations are in progress at LP-gas containers or vehicles, shall be prohibited.

Control of other sources of ignition shall comply with Chapter 3 of this code and Section 6.22 of NFPA 58 as amended.

***

3808.1 General. Fire protection shall be provided for installations having storage LP-gas containers with a water capacity of more than 4,000 gallons (15 140 L), as required by Section 6.25 of NFPA 58 as amended.

3808.2 Portable fire extinguishers. Portable fire extinguishers complying with Section 906 shall be provided as specified in NFPA 58 as amended.

***

3809.9 Storage within buildings accessible to the public and residential occupancies. Storage of LP-gas within buildings accessible to the public and in residential occupancies shall be in accordance with this section.

3809.9.1 Storage within buildings accessible to the public. Department of Transportation (DOTn) specification cylinders with maximum water capacity of 21/2 pounds (1 kg) ((~~used in completely self-contained hand torches and similar application~~)) are allowed to be stored or displayed in a building accessible to the public. The quantity of LP-gas shall not exceed ((~~200 pounds (91 kg)~~)) 25 pounds (11.4 kg) in the Fire District and 100 pounds (45.3 kg) outside the Fire District except as provided in Section 3809.11.
Exception: Storage in restaurants and at food service locations of 10-oz (238-g) butane nonrefillable containers is limited to no more than 24 containers, and an additional 24 10-oz (238-g) butane nonrefillable containers stored in another location within the building if constructed with at least a 2-hour fire wall protection. [NFPA 8.3.2.3]

3809.9.2 Storage within residential occupancies. Storage of containers within residential occupancies, including the basement or any storage area in a common basement storage area in multi-family occupancies and attached or detached garages, is limited to containers each having a maximum water capacity of 2.5 pounds (1 kg) and not exceeding 5.4 pound (2.4-kg) aggregate water capacity per living space unit. [NFPA 58 8.3.5]

3809.10 Storage within buildings not accessible to the public. The maximum quantity allowed in one storage location in buildings not accessible to the public, such as industrial buildings, shall not exceed a water capacity of 735 pounds (334 kg) [nominal 300 pounds (136 kg) of LP-gas]. Where additional storage locations are required on the same floor within the same building, they shall be separated by a minimum of 300 feet (91 440 mm). Storage beyond these limitations shall comply with Section 3809.11.

Individual LP-gas container capacities and aggregate quantities of LP-gas allowed to be stored within buildings not accessible to the public are limited in accordance with Table 3809.10.

TABLE 3809.10
STORAGE WITHIN BUILDINGS NOT ACCESSIBLE TO THE PUBLIC[1]

Location	Max Individual Container Capacity	Maximum Aggregate Quantity
Fire District	72 lbs. water capacity (nominal 30 lbs. LP-gas capacity)	144 lbs. water capacity (nominal 60 lbs. LP-gas)
Elsewhere	72 lbs. water capacity (nominal 30 lbs. LP-gas capacity)	735 lbs. water capacity (nominal 300 lbs. LP-gas capacity)

[1] Weight of LP-gas per gallon = 4.20 lbs.

***

3809.11.2 Construction. The construction of such buildings and rooms shall comply with requirements for Group H occupancies in the *International Building Code*, Chapter 10 of NFPA 58 as amended and both of the following:
1. Adequate vents shall be provided to the outside at both top and bottom, located at least 5 feet (1524 mm) from building openings.
2. The entire area shall be classified for the purposes of ignition source control in accordance with Section 6.22 of NFPA 58 as amended.

3809.12 Location of storage outside of buildings. Storage outside of buildings of LP-gas containers awaiting use, resale or part of a cylinder exchange program shall be located in accordance with Table 3809.12-A.

TABLE 3809.12-A
SEPARATION FROM EXPOSURES OF LP-GAS CONTAINERS AWAITING USE, RESALE OR EXCHANGE STORED OUTSIDE OF BUILDINGS

MINIMUM SEPARATION DISTANCE FROM STORED CYLINDERS TO (feet):

QUANTITY OF LP-GASSTORED (pounds)	Nearest important building or group of buildings or line of adjoining property that may be built upon	Line of adjoining property occupied by schools, places of religious worship, hospitals, athletic fields or other points of public gathering; busy thoroughfares; or sidewalks	LP-gas dispensing station	Doorway or opening to a building with two or more means of egress	Doorway or opening to a building with one means of egress	Combustible materials	Motor vehicle fuel dispenser
720 or less	0	0	5	5	10	10	20
721 - 2,500	((~~0~~))10	10	10	5[1]	10	10	20
2,501 - 6,000	10	10	10	10	10	10	20
6,001- 10,000	20	20	20	20	20	10	20
Over 10,000	25	25	25	25	25	10	20

For SI: 1 foot = 304.8 mm, 1 pound = 0.454 kg.

[1]5 foot (1524 mm) setback allowed to one of the two exits; 10 foot (3048 mm) setback required to second exit.

Maximum aggregate quantities of LP-gas located outside of buildings accessible to the public shall be in accordance with Table 3809.12-B.

TABLE 3809.12-B
STORAGE OUTSIDE BUILDINGS ACCESSIBLE TO THE PUBLIC[1]

Location	Max Individual Container Capacity	Maximum Aggregate Quantity
Fire District	72 lbs. water capacity (nominal 30 lbs. LP-gas)	357 lbs. water capacity (nominal 150

		lbs. LP-gas)
Elsewhere	72 pounds water capacity (nominal 30 lbs. LP-gas)	2592 lbs. water capacity (nominal 1080 lbs. LP-gas)[2]

[1] Weight of LP-gas per gallon = 4.20 lbs.
[2] Actual maximum quantity shall be determined on a case by case basis but shall not exceed the maximum quantity set forth here.

3809.13 Protection of containers. LP-gas containers shall be stored within a suitable enclosure or otherwise protected against tampering. Vehicular protection shall be provided in accordance with Section 312 ((~~as~~))if required by the *fire code official*.

***

3811.3 Garaging. Garaging of LP-gas tank vehicles shall be as specified in NFPA 58 as amended. Vehicles with LP-gas fuel systems are allowed to be stored or serviced in garages as specified in Section 11.15 of NFPA 58 as amended.

Point of Information

The following Tables may be used to approximate container capacity conversions.

FOR PORTABLE DOT/ ICC/ CTC CYLINDER APPLICATIONS:

Propane Capacity		**Water Capacity**	
(lb)	**(gal)**	**(lb)**	**(gal)**
5	1.2	12	1.4
10	2.4	23.8	2.8
14	3.3	34	4.1
20	4.7	48	5.7
25	5.9	59.5	7.1

30	7.1	72	8.6
40	9.5	95	11
60	14	144	17
100	24	239	29
150	35	357	43
200	47	477	57
300	71	715	86
420	99	1,000	119

FOR STATIONARY ASTM CONTAINER APPLICATIONS:

Water Capacity (gallons)	**LP-gas Capacity (gallons)***	**LP-gas Capacity (pounds)**
100	80	338
125	100	423
150	120	508
250	200	848
325	260	-
500	400	-
1,000	800	-

* Based on propane specific gravity of .508 at 60°F

Section 28. Chapter 45 of the 2009 International Fire Code is amended as follows:

CHAPTER 45
MARINAS

SECTION 4501
SCOPE

4501.1 Scope. Marina facilities shall be in accordance with this chapter.

Exception: Approved designated facilities and shipyards in accordance with the Administrative Rule 26.02.09, *Designated Hot Work Facilities and Shipyards* and any future revisions of this rule adopted by the *fire code official.*

***

4502.1 Definitions. The following words and terms shall, for the purpose of this chapter and as used elsewhere in this code, have the meanings shown herein.

COVERED BOAT MOORAGE. A pier or system of floating or fixed accessways to which vessels on water may be secured, 50 percent or more of which is covered by a roof.

DESIGNATED HOT WORK FACILITY. Those piers, designated by the fire code official, which by virtue of their construction, location, fire protection, emergency vehicle access and fire hydrant availability, are suitable to allow certain repairs to *vessels*.

FLOAT. A floating structure normally used as a point of transfer for passengers and goods, or both, for mooring purposes.

MARINA. Any portion of the ocean or inland water, either naturally or artificially protected, for the mooring, servicing or safety of vessels, and ((~~shall include~~))including artificially protected works, the public or private lands ashore, ((~~and~~)) structures or facilities, other than floating homes, provided within the enclosed body of water and ashore for the mooring or servicing of vessels or the servicing of their crews or passengers.

PIER. ((~~A structure built over the water, supported by pillars or piles, and used as a landing place, pleasure pavilion or similar purpose.~~)) A structure, usually of greater length than width, of timber, stone, concrete or other material, having a deck and projecting from the shore into waters so that *vessels* may be moored alongside for loading, unloading, storage, repairs or commercial uses.

[B] SUBSTRUCTURE. That portion of the construction below and including the deck immediately above the water.

[B] SUPERSTRUCTURE. That portion of construction above the deck.
Exception: *Covered boat moorage*.

VESSEL. A ((~~motorized~~)) watercraft, other than a seaplane on the water, used or capable of being used as a means of transportation. ((~~Non transportation vessels, such as houseboats and boathouses, are included in this definition.~~))

WHARF. A structure or bulkhead constructed of wood, stone, concrete or similar material built ((~~at the shore of a harbor, lake or river~~))along and parallel to waters for *vessels* to lie alongside of, and to anchor piers or floats.

***

4503.5.1 Labeling electrical disconnects. Electrical transformers, control panels and breaker panels shall be readily accessible, clearly labeled and indicate the areas they service. See also Section 605.

4503.6 Berthing and storage. Berthing and storage shall be in accordance with Chapter 7 of NFPA 303.

4503.7 ((~~Slip identification.~~))Signage. At the shore end of *piers*, *wharves* and *floats* conspicuous signage shall be located indicating the address of the *piers*, *wharves* and *floats* and, for those structures that are designed to support vehicles, the weight limit the structure can support. Numbers and letters shall be easily legible and have high contrast with the color of the sign background. Numbers and letters shall not be less than 5 inches (127 mm) in height.

Slips and mooring spaces shall be individually identified by an *approved* numeric or alphabetic designator. Space designators shall be posted at the space. Signs indicating the space designators located on finger piers and floats shall be posted at the base of all piers, finger piers, floats and finger floats.

4503.8 Emergency Plan. Owners of piers, wharves, floats and marinas shall prepare an emergency plan for the facility. The plan shall include procedures for fire department notification and fire evacuation, and shall include the location of portable fire extinguishers and hose cabinets, sprinkler and standpipe system control valves, fire department connections and electrical disconnects.

4503.8 Point of Information

For examples of emergency plans, see information bulletins located at www.seattle.gov/fire titled Emergency Procedures for Public Occupancies and Fire Evacuation Planning.

SECTION 4504
FIRE PROTECTION EQUIPMENT

4504.1 General. Piers, marinas, ((~~and~~))wharves ((~~with facilities for mooring or servicing five or more vessels~~)), and marine motor fuel-dispensing facilities shall be equipped with fire protection ((~~equipment~~))features in accordance with Sections 4504.2 through 4504.6.

4504.2 Standpipes. ((~~Marinas and boatyards shall be equipped throughout with standpipe systems in accordance with NFPA 303. Systems shall be provided with hose connections located such that no point on the marina pier or float system exceeds 150 feet (15 240 mm) from a standpipe hose connection.))~~

A manual Class I standpipe system in accordance with NFPA 14, or Class III standpipe system in accordance with NFPA 14, if approved by the *fire code official*, shall be provided for *piers*, *wharves* and *floats* if the hose lay distance from the fire apparatus to the most remote accessible portion of the pier, wharf or float exceeds 150 feet (45 720 mm).

Approved plastic pipe may be used if installed underwater, or if another approved method of protection from fire is provided.

The standpipe piping shall be a minimum of 4 inches (102 mm), sized to provide a minimum of 500 gpm (365 L/s) at 130 psi (896 kPa) at the most remote hose connection, with a simultaneous flow of 500 gpm (31.5 L/s) at the third most remote hose connection on the same pier while maintaining a maximum system pressure of 175 psi (1206 kPa).

4504.2.1 Hose connections. Hose connection stations on required standpipes shall be provided at the water end of the *pier*, *wharf* or *float*, and along the entire length of the *pier*, *wharf* or *float* at spacing not to exceed 150 feet (45 720 mm) and as close as practical to the land end. Each hose connection shall consist of a valved 21/2-inch (64 mm) fire department hose outlet. Outlet caps shall have a predrilled 1/8-inch (3.2 mm) hole for pressure relief and be secured with a short length of chain or cable to prevent falling after removal. Listed equipment shall be used.

Exception: The hose connection at the land end of the pier, wharf or float may be omitted when a hose connection is located within 150 feet (45 720 mm) of the fire apparatus access road.

4504.2.2((~~1~~)) Identification of standpipe outlets. Standpipe hose connection locations shall be clearly identified by a flag or other *approved* means designed to be readily visible from the pier accessing the float system.

4504.3 Access and water supply. Fire department apparatus access lanes, not less than 20 feet wide (6096 mm) and capable of supporting a 50,000-pound (22 700 kg) vehicle or 24,000 pounds (10 896 kg) per axle (HS20 loading), shall be provided and so located as to provide fire department apparatus access to within 50 feet (15 240 mm) travel distance to the shore end of all piers, wharves and floats. The apparatus access lane shall meet the requirements of Appendix D.

At least two fire hydrants shall be provided. One hydrant shall be located within 500 feet (152 400 mm) of the closest point of fire department apparatus access to the shore end of the marina *piers*, *wharves* or *floats*, or to the fire department connection (FDC) for those *piers*, *wharves* or *floats* that are equipped with standpipes. The second fire hydrant shall be located within 1000 feet (304 800 mm) of the closest point of fire department apparatus access to the shore end of the marina *piers*, *wharves* or *floats*, or to the FDC for those piers, wharves or floats that are equipped with standpipes. All required hydrants shall be capable of delivering not less that 1000 gpm (63 L/s) at a minimum residual pressure of 20 psi (138 kPa) each.

((~~Piers and wharves shall be provided with fire apparatus access roads and water-supply systems with on-site fire hydrants when required by the *fire code official*. Such roads and water systems shall be provided and maintained in accordance with Sections 503.2 and 508.~~))

4504.4 Portable fire extinguishers. One portable fire extinguisher ((~~of the ordinary (moderate) hazard type)~~)having a minimum rating of 2A 20-BC, shall be provided ((~~at each required standpipe hose connection~~))within 75 feet (22 860 mm) of all portions of *piers*, *wharves* and *floats*. If applicable, ((~~A~~))additional fire extinguishers, suitable for the hazards involved, shall be provided. Fire extinguishers shall be maintained in accordance with Section 906 and NFPA 10.

4504.5 Communications. A telephone not requiring a coin to operate or other *approved*, clearly identified means to notify the fire department shall be provided on the site in a location *approved* by the *fire code official*. The street address of the marina and emergency telephone number(s) shall be displayed prominently on a sign at the telephone.

***

4504.7 Automatic sprinkler systems.

4504.7.1 Covered boat moorage and structures on piers. Automatic sprinklers shall be provided for covered boat moorage exceeding 500 square feet (46.5m^2) in projected roof area per *pier*, *wharf* or *float*. The sprinkler system shall be designed and installed in accordance with NFPA 13 for Extra Hazard Group 2 occupancy. If sprinklers are required by this chapter for covered boat moorage, the sprinklers shall be extended to any structure on the *pier*, *wharf* or *float* exceeding 500 square feet (46.5 m^2) in projected roof area. For the purposes of this chapter, the projected roof area means the footprint of the roof.

4504.7.2 Substructure. Automatic sprinklers shall be installed under the substructure of every new waterfront structure in accordance with NFPA 307 and as specified in Chapter 9.

Exceptions:
1. Combustible substructures whose deck area does not exceed 8,000 square feet (743.2 m^2) and does not support superstructures.
2. Combustible substructures whose deck area does not exceed 8,000 square feet (743.2 m^2) but supports superstructures not required to be provided with an approved automatic sprinkler system as specified in Section 424.9.2 of the *Seattle Building Code*.
3. Noncombustible substructures with or without superstructures.
4. Substructures, over other than tidal water, if sprinkler heads cannot be installed with a minimum clearance of 4 feet (1219 mm) above mean high water.

5. Substructures resulting from walkways or finger piers that do not exceed l0 feet (3048 mm) in width.

4504.7.3 Superstructure. Automatic sprinklers shall be provided in superstructures, other than structures on piers with covered boat moorage in accordance with 4504.7.1, as required in Chapter 9.

4504.7.4 Monitoring. Sprinkler systems shall be monitored by an approved central station service in accordance with Section 903.4.1.

4504.8 Fire department connections. Standpipe and sprinkler systems shall be equipped with not less than a two-way 21/2-inch (64 mm) fire department connection (FDC), which shall be readily visible and located at the fire department apparatus access.

4504.9 Marina fire protection confidence testing. Standpipe and sprinkler systems shall be inspected and tested in accordance with Administrative Rule 9.02.09, *Confidence Test Requirements for Life Safety Systems* and any future revisions of this rule adopted by the *fire code official*. Maintenance and periodic testing are the owner's responsibility, or the responsibility of such other person as may be designated by the owner, and are separate from fire department inspections. The person, firm or corporation performing such work shall have a certificate from the fire department. See Administrative Rule 9.01.09, *Certification for Installing, Maintaining and Testing Life Safety Systems and Equipment* and any future revisions of this rule adopted by the *fire code official.*

***

Section 29. Chapter 46 of the 2009 International Fire Code is amended as follows:

***

4603.3.3 More than five stories. In other than Group I occupancies, interior vertical openings connecting more than five stories shall be protected by 1-hour fire-resistance- rated construction.
Exceptions:
1. Vertical opening protection is not required for Group R-3 occupancies.
2. Vertical opening protection is not required for open parking garages and ramps.
3. Vertical opening protection is not required for escalators.
4. Vertical opening protection is not required for stairways that are not a portion of the required means of egress constructed in accordance with the *Seattle Building Code* in effect at the time of construction.

***

4603.4.3 Nightclub. An automatic sprinkler system shall be provided throughout existing *nightclubs*. No building shall be constructed for, used for, or converted to, occupancy as a *nightclub* except in accordance with this section.

***

4603.6 Fire alarm systems. An *approved* fire alarm system shall be installed in existing buildings and structures in accordance with Sections 4603.6.1 through 4603.6.7 and provide occupant notification in accordance with Section 907.6 unless other requirements are provided by other sections of this code.

Exception: Non-residential ((~~O~~))occupancies with an existing, previously *approved* fire alarm system, and residential occupancies with a fire alarm system capable of achieving a minimum sound level in the sleeping rooms of 60 dBa or 15 dBa above ambient noise level.

***

[W] ((~~**4603.6.7 Group R-4.** An automatic or manual fire alarm system that activates the occupant notification system in accordance with Section 907.6 shall be installed in existing Group R-4 residential care/assisted living facilities in accordance with Section 907.2.10.~~
~~**Exceptions:**~~
~~1. Where there are interconnected smoke alarms meeting the requirements of Section 907.2.11 and there is at least one manual fire alarm box per floor arranged to continuously sound the smoke alarms.~~
~~2. Other manually activated, continuously sounding alarms *approved* by the *fire code official*.~~))

***

4603.8 Emergency responder radio coverage. Within a timeframe established by the *fire code official*, existing buildings that do not have approved radio coverage for emergency responders within the building, and existing buildings that have an existing wired communication system that has been approved by the building official and *fire code official* but cannot be repaired or is replaced, shall be equipped with such coverage using a system in accordance with Appendix J of this code.

Exceptions:

1. Where it is determined by the *fire code official* that the radio coverage system is not needed.
2. One and two family dwellings and townhouses.
3. Buildings constructed primarily of wood-frame (Type V) construction without below grade storage or parking areas.
4. Buildings that are 35 feet high (as defined by the *Seattle Building Code* Section 502) or less without below grade storage or parking areas.

SECTION 4604
MEANS OF EGRESS FOR EXISTING BUILDINGS

[W] 4604.1 General. *Means of egress* in existing buildings shall comply with ((~~the minimum egress requirements when specified in Table 4603.1 as further enumerated in Sections 4604.2~~

~~through 4604.21, and the building code that applied at the time of construction. Where the provisions conflict, the most restrictive provision shall apply.~~))Section 1030 and Sections 4604.1.1 through 4604.23.

Exception: Means of egress conforming to the requirements of the building code under which they were constructed and Section 1030 shall not be required to comply with 4604.2 through 4604.21.

[W] 4604.1.1 Evaluation. Existing buildings that were not required to comply with a building code at the time of construction, and that constitute a distinct hazard to life as determined by the *fire code official*, shall comply with the minimum egress requirements when specified in Table 4603.1 as further enumerated in Sections 4604.2 through 4604.2((~~1~~))3 ((~~and, in addition, shall have a life safety evaluation prepared, consistent with the requirements of Section 104.7.2~~)). The *fire code official* shall notify the building owner in writing of the distinct hazard and, in addition, shall have authority to require a life safety evaluation be prepared. The life safety evaluation shall identify any changes to the *means of egress* that are necessary to provide safe egress to occupants and shall be subject to review and approval by the *fire code official*. The building shall be modified to comply with the recommendations set forth in the *approved* evaluation.

***

4604.5 Illumination emergency power. The power supply for *means of egress* illumination shall normally be provided by the premises' electrical supply. In the event of power supply failure, illumination shall be automatically provided from an emergency system for the following occupancies where such occupancies require two or more *means of egress*:

1. Group A having 50 or more occupants.

   Exception: Assembly occupancies used exclusively as a place of worship and having an *occupant load* of less than 300.

2. Group B buildings three or more stories in height, buildings with 100 or more occupants above or below a *level of exit discharge* serving the occupants or buildings with 1,000 or more total occupants.
3. Group E in interior stairs, *corridors*, windowless areas with student occupancy, shops and laboratories.
4. Group F having more than 100 occupants.

   Exception: Buildings used only during daylight hours which are provided with windows for natural light in accordance with the *International Building Code*.

5. Group I.
6. Group M.

   Exception: Buildings less than 3,000 square feet (279m2) in gross sales area on one story only, excluding mezzanines.

7. Group R-1.

   Exception: Where each *sleeping unit* has direct access to the outside of the building at grade.

8. Group R-2.

Exception: Where each *dwelling unit* or *sleeping unit* has direct access to the outside of the building at grade.

((~~9. Group R-4.~~))

((~~Exception:~~ ~~Where each *sleeping unit* has direct access to the outside of the building at ground level.~~))

***

Section 30. Chapter 47 of the 2009 International Fire Code is amended as follows:

CHAPTER 47
REFERENCED STANDARDS

This chapter lists the standards that are referenced in various sections of this document. The standards are listed herein by the promulgating agency of the standard, the standard identification, the effective date and title, and the section or sections of this document that reference the standard. The application of the referenced standards shall be as specified in Section 102.((~~6~~))7.

***

National Fire Protection Association
1 Batterymarch Park

NFPA Quincy, MA 02169-7471

Standard reference number	Title	Referenced in code section number
10—07	Portable Fire Extinguishers	Table 901.6.1, 906.2, 906.3, Table 906.3(1), Table 906.3(2), 906.3.2, 906.3.4, 2106.3, I101.1
11—05	Low-, Medium- and High-expansion Foam	904.7, 3404.2.9.2.2
12—05	Carbon Dioxide Extinguishing Systems	Table 901.6.1, 904.8, 904.11
12A—04	Halon 1301 Fire Extinguishing Systems	Table 901.6.1, 904.9
13—07	Installation of Sprinkler Systems	Table 903.3.1.1, 903.3.2, 903.3.5.1.1, 903.3.5.2, 904.11, 905.3.4, 907.7.3, 2301.1, 2304.2, Table 2306.2, 2306.9, 2307.2, 2307.2.1, 2308.2.2, 2308.2.2.1, 2308.4, 2310.1, 2501.1, 2804.1, 2806.5.7, 3404.3.3.9, Table 3404.3.6.3(7), 3404.3.7.5.1, 3404.3.8.4
13D—07	Installation of Sprinkler Systems in One- and Two-family Dwellings and Manufactured Homes	903.3.1.3, 903.3.5.1.1
13R—07	Installation of Sprinkler Systems in Residential Occupancies up to and Including Four Stories in Height	903.3.1.2, 903.3.5.1.1, 903.3.5.1.2, 903.4
14—07	Installation of Standpipe and Hose Systems	905.2, 905.3.4, 905.4.2, 905.6.2, 905.8
15—07	Water Spray Fixed Systems for Fire Protection	3404.2.9.2.3
16—07	Installation of Foam-water Sprinkler and Foam-water Spray Systems	904.7, 904.11
17—02	Dry Chemical Extinguishing Systems	Table 901.6.1, 904.6, 904.11
17A—02	Wet Chemical Extinguishing Systems	Table 901.6.1, 904.5, 904.11
20—07	Installation of Stationary Pumps for Fire Protection	913.1, 913.2, 913.5.1
22—03	Water Tanks for Private Fire Protection	507.2.2
24—07	Installation of Private Fire Service Mains and Their Appurtenances	507.2.1, 1909.5
25—08	Inspection, Testing and Maintenance of Water-based Fire Protection Systems	507.5.3, Table 901.6.1, 904.7.1, 912.6, 913.5, I101.1
30—08	Flammable and Combustible Liquids Code	3403.6.2, 3403.6.2.1, 3404.2.7, 3404.2.7.1,

3404.2.7.2, 3404.2.7.3.6, 3404.2.7.4, 3404.2.7.6, 3404.2.7.7, 3404.2.7.8, 3404.2.7.9, 3404.2.9.3, 3404.2.9.4, 3404.2.9.6.1.1, 3404.2.9.6.1.2, 3404.2.9.6.1.3, 3404.2.9.6.1.4, 3404.2.9.6.1.5, 3404.2.9.6.2, 3404.2.9.7.4, 3404.2.10.2, 3404.2.11.4, 3404.2.11.5.2, 3404.2.12.1, 3404.3.1, 3404.3.6,Table 3404.3.6.3(1), Table 3404.3.6.3(2), Table 3404.3.6.3(3), 3404.3.7.2.3, 3404.3.8.4, 3406.8.3

30A—08 Code for Motor Fuel-dispensing Facilities and Repair Garages 2201.4, 2201.5, 2201.6, 2206.6.3, 2210.1

30B—07 Manufacture and Storage of Aerosol Products. . . . . 2801.1, 2803.1, 2804.1, Table 2804.3.1, Table 2804.3.2, Table 2804.3.2.2, 2804.4.1, 2804.5.2, 2804.6, 2806.2.3, 2806.3.2, Table 2806.4, 2806.5.1, 2806.5.6, 2807.1

31—06 Installation of Oil-burning Equipment 603.1.7, 603.3.1, 603.3.3

32—07 Dry Cleaning Plants 1207.1, 1207.3

33—07 Spray Application Using Flammable or Combustible Materials 1504.3.2

34—07 Dipping and Coating Processes Using Flammable or Combustible Liquids. 1505.3, 1505.4.1.1

35—05 Manufacture of Organic Coatings 2001.3, 2005.4

40—07 Storage and Handling of Cellulose Nitrate Film. 306.2

51—07 Design and Installation of Oxygen-fuel Gas Systems for Welding, Cutting and Allied Processes 2601.5, 2607.1, 2609.1

51A—06 Acetylene Cylinder Charging Plants 2608.1

52—06 Vehicular Fuel System Code 3001.1

55—05 Standard for the Storage, Use and Handling of Compressed Gases and Cryogenic Fluids in Portable and Stationery Containers Cylinders and Tanks. 2209.2.1, 3201.1, 3501.1, 4001.1

58—08 as amended Liquefied Petroleum Gas Code 603.4.2.1.1, 3801.1, 3803.1, 3803.2.1, 3803.2.1.2, 3803.2.1.7, 3803.2.2, 3804.1, 3804.3.1, 3804.4, 3806.2, 3806.3, 3807.2, 3808.1, 3808.2, 3809.11.2, 3811.3

59A—06 Production, Storage and Handling of Liquefied Natural Gas (LNG) 3001.1, 3201.1

61—08 Prevention of Fires and Dust Explosions in Agricultural and Food Products Facilities . . . . . Table 1304.1

69—08 Explosion Prevention Systems . . . . . .911.1, 911.3, Table 1304.1

70—08 National Electrical Code . . . . . 603.1.3, 603.1.7, 603.5.2, 604.2.15.1, 605.3, 605.4, 605.9, 606.16, 904.3.1, 907.1, 909.11, 909.12.1, 909.16.3, 1106.3.4, 1204.2.3, Table 1304.1, 1404.7, 1503.2.1, 1503.2.1.1, 1503.2.1.4, 1503.2.5, 1504.9.4, 1604.5, 1703.2, 1803.7.1, 1803.7.2, 1803.7.3, 1903.4, 2004.1, 2205.4, 2208.8.1.2.4, 2209.2.3, 2211.3.1, 2211.8.1.2.4, 2403.12.6.1, 2404.15.7, 2606.4, 2703.7.3, 3003.7.6, 3003.8, 3003.16.11, 3003.16.14, 3203.6, 3203.7.2, 3403.1, Table 3403.1.1, 3403.1.3, 3404.2.8.12, 3404.2.8.17, 3406.2.8, 3503.1.5, 3503.1.5.1, 3507.1.10, 3606.5.5, 3606.5.6, 3704.2.2.8

72—07 National Fire Alarm Code . . . . . 508.1.5, Table 901.6.1, 903.4.1, 904.3.5, 907.2, 907.2.6, 907.2.11, 907.2.13.2, 907.3, 907.4.3, 907.4.4, 907.6.2.1.2, 907.6.2.2, 907.7, 907.7.1, 907.7.2, 907.7.5, 907.8, 907.8.1, 907.8.2, 907.9, 907.9.2, 907.9.5, I101.1, J103.1.4

80—07 Fire Doors and Other Opening Protectives 703.1.3, 1008.1.3.3

85—07 Boiler and Combustion System Hazards Code . . . . . .Table 1304.1

86—07 Ovens and Furnaces. 2101.1

92B—05 Smoke Management Systems in Malls, Atria and Large Spaces 909.8

96 – 07 Standard for Ventilation Control and Fire Protection of Commercial Cooking Operations……609.3

99—05 Health Care Facilities 3006.4

101—06 Life Safety Code. 1028.6.2

105—07 Installation of Smoke Door Assemblies and Other Opening Protectives 703.1.2

110—05 Emergency and Standby Power Systems 604.1, 604.3, 604.4, 913.5.2, 913.5.3

111—05 Stored Electrical Energy Emergency and Standby Power Systems. 604.1, 604.3, 604.4

120—04 Coal Preparation Plants . . . . . .Table 1304.1

130-10 as amended Standard for Fixed Guideway Transit and Passenger Rail Systems…… ……318

160—06 Flame Effects Before an Audience. 308.3.2

170—06 Standard for Fire Safety and Emergency Symbols 1024.2.6.1

211—06 Chimneys, Fireplaces, Vents and Solid Fuel-burning Appliances 603.2

241—04 Safeguarding Construction, Alteration and Demolition Operations. 1401.1

253—06 Standard Test for Critical Radiant Flux of Floor Covering Systems Using a Radiant Heat Energy Source . 804.3

260—03 Methods of Tests and Classification System for Cigarette Ignition Resistance of Components of Upholstered Furniture . …….. . 805.1.1.1, 805.2.1.1, 805.3.1.1, 805.4.1.1

261—03 Method of Test for Determining Resistance of Mock-up Upholstered Furniture

	Material Assemblies to Ignition by Smoldering Cigarettes 805.2.1.1, 805.3.1.1, 805.4.1.1
265—07	Method of Fire Tests for Evaluating Room Fire Growth Contribution of Textile Wall Coverings in Full Height Panels and Walls. 803.5.1, 803.5.1.1, 803.5.1.2, 805.4.1.1
286—06	Standard Method of Fire Tests for Evaluating Contribution of Wall and Ceiling Interior Finish to Room Fire Growth 803.1, 803.1.2, 803.1.2.1, 803.5.1
303—06	Fire Protection Standard for Marinas and Boatyards. 905.3.7, 4503.5, 4503.6, 4504.2
385—07	Tank Vehicles for Flammable and Combustible Liquids 3406.5.4.5, 3406.6, 3406.6.1
407—07	Aircraft Fuel Servicing. 1106.2, 1106.3
409—04	Aircraft Hangars . . . . . .914.8.2, Table 914.8.2, 914.8.2.1, 914.8.5
430—04	Storage of Liquid and Solid Oxidizers. 4004.1.4
484—06	Combustible Metals. . . . . .Table 1304.1
490—02	Storage of Ammonium Nitrate. 3301.1.5
495—06	Explosive Materials Code 911.1, 911.4, 3301.1.1, 3301.1.5, 3302.1, 3304.2, 3304.6.2, 3304.6.3, 3304.7.1, 3305.1, 3306.1, 3306.5.2.1, 3306.5.2.3, 3307.1, 3307.9, 3307.11, 3307.15
498—06	Safe Havens and Interchange Lots for Vehicles Transporting Explosives. 3301.1.2
502 - 08 as amended	Standard for Road Tunnels, Bridges, and Other Limited Access Highways……319
505—06	Powered Industrial Trucks, Including Type Designations, Areas of Use, Maintenance and Operation . 2703.7.3
654—06	Prevention of Fire and Dust Explosions from the Manufacturing, Processing and Handling of Combustible Particulate Solids . . . . . .Table 1304.1
655—07	Prevention of Sulfur Fires and Explosions . . . . . .Table 1304.1
664—07	Prevention of Fires and Explosions in Wood Processing and Woodworking Facilities. . . Table 1304.1, 1905.3
701—04	Methods of Fire Tests for Flame-propagation of Textiles and Films 806.2, 807.1, 807.1.2, 807.2, 807.4.2.2, 1703.5, 2404.2
703—06	Fire Retardant Impregnated Wood and Fire Retardant Coatings for Building Materials. 803.4
704—07	Identification of the Hazards of Materials for Emergency Response 606.7, 1802.1, 2404.2, 2703.2.2.1, 2703.2.2.2, 2703.5, 2703.10.2, 2705.1.10, 2705.2.1.1, 2705.4.4, 3203.4.1, 3404.2.3.2, F101.1, F101.2
720 – 09	Standard for the Installation of Carbon Monoxide (CO) Detection and Warning Equipment ……..907.2.8, 907.2.9, 907.2.10
750—06	Water Mist Fire Protection Systems. . . . . .Table 901.6.1
1122—08	Model Rocketry 3301.1.4
1123—06	Fireworks Display 3302.1, 3304.2, 3308.1, 3308.2.2, 3308.5, 3308.6
1124—06	Manufacture, Transportation, Storage and Retail Sales of Fireworks and Pyrotechnic Articles 3302.1, 3304.2, 3305.1, 3305.3, 3305.4, 3305.5
1125—07	Manufacture of Model Rocket and High Power Rocket Motors 3301.1.4
1126—06	Use of Pyrotechnics Before a Proximate Audience 3304.2, 3305.1, 3308.1, 3308.2.2, 3308.4, 3308.5
1127—08	High Power Rocketry 3301.1.4
1142—07	Water Supply for Suburban and Rural Fire Fighting B103.3
2001—08	Clean Agent Fire Extinguishing Systems . . . . . .Table 901.6.1, 904.10

UL

Underwriters Laboratories, Inc.
333 Pfingsten Road
Northbrook, IL 60062

Standard Reference number	Title	Referenced in code section number
30—95	Metal Safety Cans—with Revisions through December 2004	2703.9.10, 2705.1.10, 3405.2.4
58—96	Steel Underground Tanks for Flammable and Combustible Liquids—with Revisions through July 1998	3404.2.13.1.5
199E–04	Outline of Investigation for Fire Testing of Sprinklers and Water Spray Nozzles for Protection of Deep Fat Fryers	904.11.4.1
217–06	Single and Multiple Station Smoke Alarms—with Revisions through May 2007	907.2.11
268—06	Smoke Detectors for Fire Alarm Signaling Systems	907.2.6.2
300—05	Fire Testing of Fire Extinguishing Systems for Protection of Restaurant Cooking Equipment.	904.11
325—02	Door, Drapery, Gate, Louver and Window Operators and Systems—with Revisions through February 2006	503.5, 503.6, D103.5
710B—04	Recirculating Systems—with Revisions through April 2006.	904.11

723—03	Standard for Test for Surface Burning Characteristics of Building Materials— with Revisions through May 2005 . . . . . 802.1, 803.5.1, 803.6.2, 803.9, 804.1, 804.2.4
793—03	Automatically Operated Roof Vents for Smoke and Heat—with Revisions through April 2004 . . . . . 910.3.1
864—03	Control Units and Accessories for Fire Alarm Systems—with Revisions through March 2006 . . . . . 909.12
900—04	Air Filter Units 1504.7.8
924—06	Standard for Safety Emergency Lighting and Power Equipment 1011.4, 2403.12.6.1
1275—05	Flammable Liquid Storage Cabinets—with Revisions through May 2006 . . . . . 2703.8.7.1, 3404.3.2.1.1
1313—93	Standard for Nonmetallic Safety Cans for Petroleum Products—with Revisions through May 2003 . 2703.9.10
1315—95	Standard for Safety for Metal Waste Paper Containers—with Revisions through December 2003. . . . . 808.1
1316—94	Glass Fiber Reinforced Plastic Underground Storage Tanks for Petroleum Products, Alcohols, and Alcohol-gasoline Mixtures—with Revisions through May 2006 . . . . . 3404.2.13.1.5
1363—07	Relocatable Power Taps 605.4.1
1975—06	Fire Tests for Foamed Plastics Used for Decorative Purpose 807.4.2.1, 808.2
1994—04	Standard for Luminous Egress Path Marking Systems—with Revisions through February 2005. . . . . 1024.2.1, 1024.2.3,1024.2.4, 1024.4
2034 – 08	Single and Multiple Station Carbon Monoxide Alarms……907.2.8.4.2, 907.2.10.3
2075—07	Standard for Gas and Vapor Detectors and Sensors 2211.7.2.1
2079—04	Tests for Fire Resistance of Building Joint Systems—with Revisions through May 2006 . . . . . 702.1
2085—97	Protected Aboveground Tanks for Flammable and Combustible Liquids— with Revisions through December 1999 . . . . . 202, 3402.1, 3404.2.9.2.3, 3404.2.9.7.5, 3405.3.8.2
2200—04	Stationary Engine Generator Assemblies—with Revisions through July 2004 . . . . . 604.1.1
2208—05	Solvent Distillation Units—with Revisions through December 2006. . . . . .3405.4.1
2245—06	Below-grade Vaults for Flammable Liquid Storage Tanks 3404.2.8.1
2335—01	Fire Tests of Storage Pallets—with Revisions through September 2004 . . . . . 2308.2.1

United States Department of Health and Human Service
c/o Superintendent of Documents
U.S. Government Printing Office

USDHHS Washington, DC 20402-9325

Standard Reference number	Title	Referenced in code section number
Fifth Edition, Feb 2007	Biosafety in Microbiological and Biomedical Laboratories (BMBL)……	2701.7

***

Section 31. A new Chapter 90 is adopted as follows:

CHAPTER 90
RESIDENTIAL OCCUPANCIES
FOUR STORIES AND OVER

Chapter 90 Point of Information

The requirements of this Chapter originated in City of Seattle Ordinance 98868, effective June 6, 1970. Ordinance 98868, also known as the Ozark ordinance, applied to all existing apartment houses, apartment hotels, and hotels four stories or more in height.

SECTION 9001

GENERAL

9001.1 Definitions. For the purpose of this chapter, the following words and terms have the meaning specified in Section 9001.1:

APARTMENT HOUSE: Any building or portion thereof, containing three or more dwelling units.

APARTMENT HOTEL: A building containing both dwelling units and guest rooms.

GUEST ROOM: Any room or rooms used or intended to be used for sleeping purposes by a person hiring such room or rooms.

HOTEL: A building in which is conducted the business of lodging the public and which contains six or more guest rooms.

9001.2 Exit Enclosure Required. All existing apartment houses, apartment hotels and hotels four stories or more in height, shall have at least two fully enclosed stairways that have a one-hour fire-resistive rating throughout. The interior corridors and egressways thereof, including all doors, transoms and other openings into corridors, shall be constructed or improved to substantially have a one-hour fire-resistive rating throughout. In buildings constructed as apartment houses in accordance with the *International Building Code* and being operated as apartment houses, walls and ceilings of plaster on wood lath or 1/2-inch plasterboard construction, and 1-3/8-inch solid core doors or equivalent is sufficient to meet the requirements of this section.

9001.3 Sprinkler Alternative. In lieu of compliance with the requirements of Section 9001.2, approved automatic fire sprinkler systems may be installed in all stairways, interior corridors and egressways of existing apartment houses, apartment hotels, and hotels four stories or more in height. Automatic sprinkler systems, if so installed, shall also be installed in all janitor rooms, storage closets, utility rooms, and other usable spaces in which combustible materials are or may be sorted or kept, unless such rooms or spaces are equipped with self-closing fire doors having a one-hour fire-resistive rating.

SECTION 9002
CONFLICTS WITH LATER ADOPTED CODES

9002.1 Conflicts with Seattle Building and Seattle Fire Codes adopted after June 6, 1970. If conflicts exist between the requirements of this chapter and Seattle Building Codes and Seattle Fire Codes adopted after June 6, 1970, the provisions of the later adopted codes apply.

Section 32. A new Chapter 91 is adopted as follows:

CHAPTER 91
AUTOMATIC SPRINKLER SYSTEMS IN NURSING HOMES

Point of Information

The requirements of this Chapter originated in City of Seattle Ordinance 94931, effective August 5, 1966.

SECTION 9101
SCOPE

9101.1 Nursing Home Defined. For the purpose of this chapter, the term "nursing home" means any home, place, or institution that operates or maintains facilities providing convalescent or chronic care, or both, for a period in excess of 24 consecutive hours for three or more patients not related by blood or marriage to the operator, who by reason of illness or infirmity, are unable properly to care for themselves. Convalescent and chronic care may include, but is not limited to any or all procedures commonly employed in waiting on the sick such as administration of medicines, preparation of dressings and bandages, and carrying out of treatment prescribed by a duly licensed practitioner of the healing arts. It may also include care of mentally incompetent persons if they do not require psychiatric treatment by or under the supervision of a physician specialized in the field of medicine. Nothing in this definition shall be construed to include general hospitals or other places that provide care and treatment for the acutely ill and maintain and operate facilities for major surgery or obstetrics, or both. Nothing in this definition shall be construed to include any boarding home, guest home, hotel or related institution that is held forth to the public as providing, and that is operated to give only board, room and laundry to persons not in need of medical or nursing treatment or supervision, except in the case of temporary acute illness. The mere designation by the operator of any place or institution, which does not provide care for the acutely ill or maintain and operate facilities for major surgery or obstetrics, as a hospital, sanitarium, or similar name shall not exclude such place or institution from the provisions of Section 9102.

SECTION 9102
INSTALLATION OF EQUIPMENT

9102.1 Installation Exceptions. Approved automatic fire sprinkler systems shall be installed in all usable rooms, corridors, and stairways of existing nursing homes with the following exceptions:

1. Nursing homes that are of Type I or II construction throughout, as defined in the *International Building Code*.

2. Nursing homes not more than one story in height which have interiors with a one-hour fire resistance rating throughout.

SECTION 9103
CONFLICTS WITH LATER ADOPTED CODES

Section 9103.1. Conflicts with Seattle Building and Seattle Fire Codes adopted after August 5, 1966. If conflicts exist between the requirements of this chapter and Seattle Building Codes and Seattle Fire Codes adopted after August 5, 1966, the provisions of the later adopted code apply if they are not less stringent.

Section 33. A new Chapter 92 is adopted as follows:

CHAPTER 92
AUTOMATIC SPRINKLER SYSTEMS IN SCHOOLS

Chapter 92 Point of Information

The requirements of this Chapter originated in City of Seattle Ordinance 94931, effective August 5, 1966.

SECTION 9201
GENERAL

9201.1 School Buildings Defined. For the purpose of this chapter, the term "school building," means:

1. A public place of instruction operated by public authorities, including elementary and secondary schools.
2. A place of instruction operated by private persons or private or religious organizations in which the course of study is similar to that in a public school, and which has been authorized by the State as an educational institution.

SECTION 9202
INSTALLATION OF EQUIPMENT

9202.1 Installation Exceptions. An approved automatic fire sprinkler system shall be installed in all usable rooms, corridors and stairways of existing school buildings, two stories or more in height, with the following exceptions:

1. School buildings that are of Type I or II construction as defined in the Building Code.
2. School buildings not over three stories in height that have interiors with one-hour fire resistance rating throughout, and that have egress enclosures with a one-hour fire resistance rating.

3. School buildings, not over three stories in height, with interiors that substantially have a one-hour fire resistance rating, need only have egress corridors, stairways, janitor rooms, storage rooms and similar spaces equipped with approved automatic sprinkler systems. Classrooms and assembly rooms in such buildings need not be so equipped.

SECTION 9203
CONFLICTS WITH LATER ADOPTED CODES

9203.1 Conflicts with Seattle Building and Seattle Fire Codes adopted after August 5, 1966. If conflicts exist between the requirements of this chapter and Seattle Building Codes and Seattle Fire Codes adopted after August 5, 1966, the provisions of the later adopted code apply.

Section 34. A new Chapter 93 is adopted as follows:

CHAPTER 93
MINIMUM STANDARDS FOR HIGH-RISE BUILDINGS

Chapter 93 Point of Information

The requirements of this Chapter originated in City of Seattle Ordinance 110299, effective January 23, 1982. Where used in this Chapter, the term "Building Code" shall mean the 1982 Seattle Building Code. Where used in this Chapter, the terms "this Code" and "the fire code" shall mean the 1982 Seattle Fire Code.

SECTION 9301
GENERAL

9301.1 Purpose. The main purpose of this chapter is to improve the fire and life safety of existing high-rise buildings that do not conform to current City codes so that the health, safety and welfare of the general public is provided for and promoted. It is recognized that the application of present day fire protection techniques to some existing high-rise buildings is difficult. For this reason, this chapter may permit the use of alternative methods and innovative approaches and techniques to achieve its purpose, if *approved* by the *fire code official* and the Building Official.

9301.2 Scope. This chapter applies to all high-rise buildings in existence at the time of its adoption, as well as to all high-rise buildings coming into existence after the adoption thereof.

9301.2.1 Hazards and design features. If the *fire code official* finds a condition in a high-rise building not specifically addressed in this chapter, which in the *fire code official*'s opinion makes fire escape or fire fighting unusually difficult, the *fire code official* is authorized to

declare it to be a hazard, notify the owner of such condition and order its correction in a manner consistent with these minimum safeguards.

9301.2.2 Exempt Buildings. The *fire code official* and the Director of the Department of Planning and Development may exempt high-rise buildings that meet the requirements of Section 403 of the 1982 *Seattle Building Code* from complying with the provisions of this chapter.

9301.2.3 Conflicts. If there is a conflict between the provisions of this chapter and the provisions of an ordinance or code adopted after January 23, 1982, the provisions of the later adopted ordinance or code apply.

9301.3 Definitions. For the purpose of this chapter, certain words shall be construed as specified in this section.

CENTRAL STATION: A fire alarm reporting service listed by the Underwriters Laboratories or authorized by the *fire code official* to report alarms to the Seattle Fire Department Alarm Center. In lieu of connection to a central station listed by Underwriters Laboratories, the *fire code official* may approve building staff monitoring of a fire alarm annunciator panel if:

1. Such staff are properly trained to monitor the annunciator panel and report alarm signals to the fire department alarm center via the 9-1-1 system.
2. One or more building staff is on duty 24 hours a day and remains in the direct vicinity of the annunciator panel, e.g., a hotel desk clerk if the panel is behind the registration desk.
3. Staff persons are available in low income high-rise buildings whose primary duty requires them to be at the front desk.

DEAD-END CORRIDOR: A corridor that permits only one direction of travel from a unit or normally occupied room door to an exit, or that intersects an exit corridor on one end and does not provide an exit path on the other end. A corridor that has fire escapes directly accessible from it is not a dead-end corridor.

FLOOR USED FOR HUMAN OCCUPANCY: A floor designed and intended for occupancy by one or more persons for any part of a day, including a roof garden and an active storage area. An area that is permanently unoccupied or is occupied for the service of building equipment only is not included in this definition.

HIGH-RISE BUILDING: Buildings having floors used for human occupancy located more than 75 feet above the lowest level of fire department vehicle access.

LOW INCOME RESIDENTIAL BUILDINGS: Those buildings that meet the following requirements:

1. At least 50 percent of the dwelling or housing units as defined in the Seattle Housing and Building Maintenance Code (Seattle Municipal Code Ch. 22.204) are rented to non-transient persons at a rent at or below .9% of the current median income for all families in the Seattle area as determined by the United States Department of Housing and Urban Development; and

2. The average monthly rent for all dwelling or housing units in the building does not exceed 1.4% of the Median Income Limit.

For purposes of calculating the average monthly rent, a room that is rented on a hostel-style basis to three or more non-related persons is considered as one room rented for $200 per month.

Monthly rent includes all charges for shelter and provision of items normally associated with such use, but does not include board, health care, telephone charges and other such items.

SECTION 9302
EXITS

9302.1 General. All exits in high-rise buildings shall be illuminated as required in Section 1211 of this Code and enclosed with a minimum of one-hour fire resistive construction. Every high-rise building shall have at least one such exit. If existing exterior fire escapes are used for additional exits, they shall be tested and identified as required in Section 9302.3.

9302.2 Smokeproof enclosure. Where a high-rise building has a single, enclosed exit, the enclosure shall be continued to the exterior of the building, the exit shall be smoke-proof by mechanical ventilation in accordance with Section 3310 of the 1982 *Seattle Building Code*, or mechanically pressurized with fresh air to 0.15 inches water column and shall have a concurrent 2500 cubic feet per minute (CFM) exhaust to atmosphere in an emergency, in accordance with the provisions of the Building Code.

Exceptions:

1. Pressurization may be omitted if the building has an *approved* automatic sprinkler system, all corridor openings are self-closing, all occupied areas have access to a second means of egress or a fire escape and the omission is *approved* by the *fire code official*.
2. A single stair may exit through a building lobby, if the lobby is of non-combustible construction, does not contain combustible furnishings, and is separated from the rest of the building by one-hour fire-resistive construction. Wire-glass protected by sprinklers on both sides may be accepted as one-hour fire-resistive construction. If the lobby contains no combustible materials, wire-glass need only be protected by sprinklers on the side opposite the lobby.

9302.3 Fire Escapes. Exterior fire escapes shall be accessible and structurally safe at all times. Owners of high-rise buildings shall load test fire escapes at least once every five years with a weight of not less than 100 lb/sq. foot. The results of such a load test shall be submitted in writing to the *fire code official*. In lieu of such a test, the *fire code official* may accept the opinion of a structural engineer licensed by the State of Washington describing his inspection

and/or tests and stating that the fire escape is structurally safe and will support a load of 100 lb/sq. foot. There shall be signs *approved* by the *fire code official* clearly identifying the route of access to the fire escape from every public corridor. Fire escapes that are not maintained structurally safe and not otherwise required by provisions of the Fire Code shall be removed. Locked doors or windows are prohibited between public corridors and fire escapes.

Exceptions: If all of the following criteria are met and *approved* by the *fire code official*:

1. An identified tool or device for opening the locked door or window is permanently affixed in close proximity to the locked point.
2. The area around the locked door or window is served by emergency illumination.
3. Clearly understandable directions indicating the use of the tool and the route to the fire escape are posted at the locked door or window.

9302.4 Doors. All exit doors in the path of exit travel shall be self-closing or automatic closing in accordance with Section 713.6 of the 1982 Building Code. Doors held open by fusible links, and sliding or vertical doors are prohibited in exit-ways. Stairway doors shall be self-latching.

9302.5 Unlocking of doors. Stairway doors, including the doors between any stairway and the roof, shall not have locks or shall unlock automatically whenever a fire alarm is activated in the high-rise building. Such locks shall unlock automatically when power is off (fail safe). If the only locked door in a stair shaft is the one that leads to the roof, it may be locked by panic hardware or *approved* alarm lock-paddle bars.

9302.6 Egress from stairways. Enclosed stairways serving more than six floors shall have two means of egress from the stairway. Enclosed stairways serving ten or more floors shall have re-entry into the building at approximately 5-story intervals. Re-entry signs shall be posted in the stair.

Exceptions:

1. Jails.
2. If telephones connected to a 24-hour manned location are provided in the stairway in each 5-floor increment that does not have a means of egress.
3. If any door serving as an entrance to the stair does not automatically lock behind a person entering the stair.
4. If alternate means of alerting building management to persons trapped in a stairwell are *approved* by the Building Official.

SECTION 9303
DEAD-END CORRIDORS

9303.1 Dead-end corridors. Dead-end corridors are limited to 75 feet in length in office occupancies and 30 feet in length in all other occupancies. If such limits are exceeded, automatic sprinkler protection meeting the requirements of the Fire Code and the Building Code shall be

provided for the entire dead-end corridor, with one head on the room side of each door opening onto the corridor. Domestic water systems may be used to supply such sprinklers when *approved* by the *fire code official*.

Exceptions:

1. In high-rise buildings, inactive doors leading from the dead-end corridor into spaces that are not in normal use may be covered with 5/8((")))inch type "x" gypsum board or its equivalent, in lieu of installing a sprinkler head over the door or smoke detector in the room.
2. In office occupancies, sprinkler heads on the room side of each door opening onto the corridor need not be installed.
3. In residential buildings, if corridors and each guest room are equipped with electrically supervised heat((~~smoke~~)) detectors connected to the building fire alarm system, sprinkler heads, or any combination thereof. If heat((~~smoke~~)) detectors are used in rooms in lieu of sprinklers, doors must be rated at 20 minutes and must be self-closing.
4. In office occupancies, sprinkler systems are not required in a dead-end corridor if the corridor is equipped with smoke detectors and each room opening onto the corridor is equipped with at least one smoke detector. Such detector shall be electrically supervised and connected to the building fire alarm system.
5. If there is a fire escape not directly accessible from the corridor and the exit route is protected by electrically supervised smoke detection.
6. Corridors within residential units are exempt.
7. Corridors within private offices may have corridor only smoke detection connected to the building alarm systems.

SECTION 9304
FIRE RESISTIVE CONSTRUCTION

9304.1 Fire separation. Any space larger than 1,500 square feet shall be separated from building stair shafts, elevator shafts and air handling shafts by non-combustible smoke resistive separation (glass walls with wood stops are acceptable) and equipped with smoke detectors connected to the building fire alarm system.

Exceptions:

1. Spaces that have *approved* automatic sprinkler systems.
2. Building lobbies or corridors which are equipped with an *approved* smoke control system that includes shaft pressurization and automatic smoke removal.
3. Building lobbies or corridors of any size that do not contain combustible furnishings (other than carpet) or commercial spaces and have non-combustible interior finish throughout.

NOTE: To qualify for exception 3, all spaces adjacent to the building lobby must be separated and equipped with smoke detectors as outlined in this section, and all doors

leading into the lobby must be self-closing or automatically closing upon activation of the building fire alarm system.

4. Office areas above the main lobby, including open space design areas.
   NOTE: This exception does not apply to retail or wholesale stores, display rooms, restaurants, cocktail lounges and bars, banquet rooms, meeting rooms, storage rooms and spaces that, because of unusual fuel load or other conditions, pose an unusual hazard in the opinion of the *fire code official*.
5. Smoke detectors are not required in spaces that are separated by one-hour fire-resistive construction, with openings protected by one-hour self-closing doors.

Domestic water systems may be used to supply the sprinkler system referred to in this section if *approved* by the *fire code official*.

9304.2 Shaft enclosures. All openings that connect three or more floors shall be enclosed with a minimum of one-hour fire resistive construction.

Exception: Openings complying with Sections 304.6 or 402 of the 1982 Seattle Building Code.

SECTION 9305
HEATING, VENTILATION AND AIR CONDITIONING SYSTEM (HVAC) SHUTDOWN

9305.1 Air moving systems. Air moving systems that serve more than the floor on which they are located shall automatically shut down on any high-rise building fire alarm, or shall be provided with a manual shutdown switch located at the fire alarm panel in the main building lobby.

Exception: Air moving systems of:

1. Less than 2,000 CFM.
2. Exhaust only systems of less than 15,000 CFM, such as toilet, range hood, kitchen, fume hood, etc.
3. HVAC systems of less than 15,000 CFM with automatic shut-down on smoke detectors in the area served, which are connected to the building fire alarm system.
4. Life safety pressurization systems as provided in the Building Code.
5. Buildings with *approved* automatic smoke control pursuant to Section 1807 of the 1982 edition of the Seattle Building Code.

SECTION 9306
FIRE ALARM AND DETECTION SYSTEMS

9306.1 General. Every high-rise building, except a residential occupancy with a system installed under Ordinance 106107 as now or hereafter amended, shall have an electrically supervised fire alarm and detection system *approved* by the *fire code official*, as follows:

A manual pull station shall be located at every floor exit door, except in office occupancies.

The alarm system for the high-rise building shall be monitored by a central station, or other such means *approved* by the *fire code official*.

The alarm systems shall be electrically supervised and have battery emergency power sufficient to operate for a period of 24 hours and sound the alarm for 10 minutes at the end of that period.

9306.2 Automatic smoke detection. There shall be electrically supervised automatic smoke detection in elevator landings, public corridors, and on the corridor or floor side of each exit stairway.

Exception: If a corridor has an *approved* automatic sprinkler system, smoke detectors may be omitted from the corridor.

There shall be electrically supervised automatic smoke detectors within 50 feet of building perimeter walls and at standard spacing (approximately 30 feet) to the center of the floor.

Exceptions:

1. Interior of residential units.
2. Floors that have an *approved* automatic sprinkler system.
3. Parking garages.
4. Building Mechanical Spaces.
5. Any space above the top occupied floor.

9306.3 Rooms without sprinklers. There shall be electrically supervised automatic heat or smoke detection in rooms used for storage, shops, handicraft, janitor, trash and similar purposes where the fuel load may be significantly higher than the average floor fuel load and no automatic sprinkler system exists.

Exceptions:

1. Rooms with an *approved* automatic sprinkler system.
2. Rooms under 10 square feet opening onto exit corridors.
3. Rooms under 100 square feet not opening onto exit corridors.
4. Rooms within residential units.
5. Rooms where the storage is in closed metal containers.
6. Rooms other than those opening onto a corridor and within 30 ft. of an electrically supervised automatic smoke detector.

9306.4 Audibility. Alarm systems shall have audible devices producing a slow "whoop" sound audible at 15 dBA above ambient sound levels with a minimum of 60 dBA throughout residential occupancies and 10 dBA above ambient sound levels with a minimum of 55 dBA throughout other occupancies, and shall have a microphone capable of making voice announcements simultaneously to all floors.

The alarm shall sound at a minimum on the floor where the fire is occurring and the floor above, and the alarm system shall be capable of sounding a general alarm throughout the high rise building. The alarm system shall be designed so that a general alarm may be activated from two separate locations.

9306.4.1 Zones. Fire alarm systems shall be zoned per floor.

9306.4.2 Panels. There shall be an annunciator panel in the main lobby of a high rise building or in such other areas *approved* by the *fire code official* as an emergency control center.

9306.5 Automatic sprinklers. If an automatic sprinkler system has been installed for fire protection, the water flow alarm shall be connected to the building fire alarm.

Exception: Where automatic smoke detectors are installed in the area and zoned, a single water flow alarm may be used.

9306.6 Elevator shafts. For purposes of Section 9306, wiring for fire alarm and fire detection systems may be installed in elevator shafts, if:

1. Such wiring shall not interfere with the safe operation of the elevator.
2. Such wiring shall be enclosed within metal conduit and all junction boxes shall be located outside the shaft.
3. All wiring work shall be done under applicable permit obtained from the Department of Planning and Development.

9306.7 Elevator recall. A fire alarm originating on a floor other than the main lobby floor shall cause all elevators to be returned to the main floor in accordance with Chapter 30 of the 1982 *Seattle Building Code*. Whenever new elevator controllers are installed, they shall meet provisions of the current *Seattle Building* and *Elevator Codes*. Newly installed controllers shall have the capability of selecting alternate recall floors.

Exception: Freight elevators with manually operated doors.

SECTION 9307
EMERGENCY POWER

9307.1 General. High-rise buildings not meeting the Building Code in effect at the time of the original adoption of this article shall have, as a minimum, emergency power as follows:

1. Stairway pressurization emergency power shall be provided by an on-site diesel engine generator set. Such power shall start automatically on fire alarm and the generator set shall have a two-hour fuel supply.

2. Exit signs and pathway illumination shall have emergency power by trickle charged storage batteries. Such batteries shall have a capacity to provide required illumination for 90 minutes.
3. Fire alarm emergency power shall be provided as required in Section 9306.

SECTION 9308
SIGN REQUIREMENTS

9308.1 General. All signs in this section shall be *approved* by the *fire code official* and have graphic symbols if possible. In hotels, signs must have graphic symbols. Sign lettering shall follow Appendix I-C of the 1982 *Seattle Fire Code*.

A sign shall be posted on the room side of every hotel guest room indicating the relationship of that room to the exits and fire extinguishers, and giving basic information on what to do in the event of fire in the building.

9308.2 Stairs. Signs shall be provided on the stairway side of every stair door indicating the number of the stair, the floor that the door serves, the high-rise building re-entry points, and stair termination.

9308.3 Elevators. A sign shall be posted in every elevator lobby above each call switch noting that the elevators will be recalled to the building lobby on fire alarm. This sign shall warn persons not to use the elevator in the event of fire and direct them to use the stairway.

If exit signs are not clearly visible from the elevator lobby, signs shall be installed to indicate the direction to stair and fire escape exits.

9308.4 Emergency illumination. Emergency illumination shall be provided at the elevator lobby sign location.

9308.5 Exit identification. "NOT AN EXIT" signs shall be installed at all doorways, passageways, or stairways that are not exits, exit accesses or exit discharges, and that may be mistaken for an exit. A sign indicating the use of the doorway, passageway, or stairway, such as "to basement," "storeroom," or "linen closet," is permitted in lieu of the "NOT AN EXIT" sign.

SECTION 9309
EMERGENCY PREPAREDNESS

9309.1 Emergency plan. Owners of high-rise buildings shall prepare an emergency operations plan in accordance with Section 403 of the 1982 Seattle Building Code. In addition to the requirements of Section 403 of the 1982 Seattle Building Code, the emergency operations plan shall specify the duties during a fire emergency of the building management and staff, the building fire safety directors and floor wardens as identified in Section 9309.2.

9309.2 Building staff training. Owners of high-rise buildings shall designate from existing staff a building fire safety director who shall be responsible for the operation of the building fire protection equipment. Owners of high-rise buildings and/or tenants employing over 100 persons shall designate a floor warden for each floor to be responsible for evacuating the people on their respective floors in emergencies. The names and work locations of the director and the floor wardens shall be maintained on a roster contained in the building emergency operations plan.

Exceptions:

1. Residential condominiums and apartment occupancies not employing staff.
2. Office and retail occupancies after normal business hours.

NOTE: In residential buildings employing staff, if there are not enough staff to appoint a floor warden for each floor, wardens shall be appointed to the fire floor, the floor above and as many additional floors as possible. In buildings where only one staff person is available, that person will be the Fire Safety Director.

9309.3 Fire drills. The staff of high-rise buildings shall conduct, and the occupants thereof shall participate in, fire drills on a regular basis as established in Chapter 4 of the 2009 Seattle Fire Code.

Section 35. A new Chapter 94 is adopted as follows:

CHAPTER 94
FIRE PROTECTION FOR COVERED BOAT MOORAGE

Chapter 94 Point of Information

The requirements of this chapter originated in City of Seattle Ordinance 121773, effective may 18, 2005. The requirements of this ordinance apply to all covered moorage marina facilities inexistence on the effective date of May 18, 2005.

SECTION 9401
GENERAL

9401.1 Scope. This chapter applies to covered portions of all marinas with covered boat moorage in existence at the time of its adoption.

Exceptions:

1. *Approved* designated facilities and shipyards in accordance with Administrative Rule 26.02.04, *Designated Hot Work Facilities and Shipyards*.
2. Boathouses.

9401.2 Intent. This Chapter is intended to promote the health, safety and welfare of life and property from fire at covered boat moorage.

9401.3 Modifications. The retroactive requirements of this chapter may be modified if their application clearly would be impractical for economic or physical reasons in the judgment of the *fire code official*, and only if it is clearly evident that a reasonable degree of safety is provided.

9401.4 Signage. Conspicuous signage shall be located at the fire apparatus access road termination point and the shore end of piers, wharves and floats. Signage shall indicate the address, directions and maps if required by the *fire code official*. For those structures that are designed to support vehicles, signage shall indicate the weight limit. Numbers and letters shall be easily legible and have high contrast with the color of the sign background. Numbers and letters shall not be less than 5 inches (127 mm) in height and shall have a minimum stroke of 0.5 inches (12.7 mm).

9401.5 Smoking Restrictions. Smoking is prohibited in all areas where fuels and other flammable and combustible liquids and gases are stored or dispensed, in battery rooms, and in other such locations as management or the *fire code official* designate. "No Smoking" signs shall be conspicuously posted.

9401.6 Transmittal of Fire Emergency. All marinas and boatyards shall have a means to notify the fire department rapidly in the event of an emergency. If a telephone is used for this purpose, it shall be available for use at all times and shall not require the use of a coin. The street address of the facility and the emergency telephone number(s) shall be displayed prominently on a sign at the telephone.

9401.7 Labeling electrical shutoffs. Electrical transformers, control panels, and breaker panels shall be readily accessible, clearly labeled and indicate the areas they service. See also SFC 605.3.

9401.8 Fire extinguishers. One portable fire extinguisher having a minimum rating of 2A 20-BC shall be provided within 75 feet (22,860 mm) of all portions of piers, wharves, and floats, or at each required hose station. Additional fire extinguishers, suitable for the hazards involved, shall be provided and maintained in accordance with SFC 906 and NFPA Standard 10.

SECTION 9402
DEFINITIONS

9402.1 Definitions. The following words and terms shall, for the purposes of this chapter, have the meanings shown here.

BERTH is the water space to be occupied by a boat or other vessel alongside or between bulkheads, piers, piles, fixed and floating docks, or any similar access structure. (See also definition for Slip.)

BOATHOUSE is an independently floating structure designed to be moored to a main float system to enclose and protect a vessel or vessels. A boathouse is capable of being moved on water, but is typically moored to a float system for long periods of time.

COVERED BOAT MOORAGE is a pier or system of floating or fixed accessways to which vessels on water may be secured and is covered by a roof.

DRAFT CURTAIN. A structure arranged to limit the spread of smoke and heat along the underside of the ceiling or roof.

FIRE PARTITION is a vertical assembly of materials designed to restrict the spread of fire in which openings are protected.

FLOAT is a floating structure normally used as a point of transfer for passengers and goods, or both, for mooring purposes.

GRAVITY-OPERATED DROP OUT VENTS. Automatic smoke and heat vents containing heat-sensitive glazing designed to shrink and drop out of the vent opening when exposed to fire.

MARINA is any portion of the ocean or inland water, either naturally or artificially protected, for the mooring, servicing, or safety of vessels and includes artificially protected works, the public or private lands ashore, and structures or facilities provided within the enclosed body of water and ashore for the mooring or servicing of vessels or the servicing of their crews or passengers.

MARINE MOTOR FUEL-DISPENSING FACILITY. That portion of property where flammable or combustible liquids or gases used as fuel for watercraft are stored and dispensed from fixed equipment on shore, piers, wharves, floats, or barges into the fuel tanks of watercraft and includes all other facilities used in connection therewith.

PIER is a structure, usually of greater length than width, of timber, stone, concrete or other material, having a deck and projecting from the shore into waters so that vessels may be moored alongside for loading, unloading, storage, repairs or commercial uses.

SLIP is a berthing space between or adjacent to piers, wharves, or docks; the water areas associated with boat moorage. (See also definition for Berth.)

WHARF OR QUAY is a structure of timber, stone, concrete or other material having a platform built along and parallel to waters so that vessels may be moored alongside for loading, unloading, storage, repairs or commercial uses.

SECTION 9403
PLANS AND APPROVALS

9403.1 Plans. Plans for marina fire-protection shall be *approved* prior to installation. The work shall be subject to final inspection and approval after installation.

SECTION 9404
ACCESS AND WATER SUPPLY

9404.1 Fire apparatus access roads. Fire apparatus access roads shall be provided and so located as to provide fire department apparatus access to within 150 feet (45,720 mm) travel distance to the shore end of all marina piers, wharves, and floats. Fire apparatus access roads shall be in accordance with Appendix D of the 2003 Seattle Fire Code.

> **Exception:** If *approved* by the *fire code official*, a Class I standpipe system may be installed on piers, wharves, or floats if conditions are such that providing fire department access lanes to within 150 feet (45,720 mm) to the shore end of the piers, wharves, and floats is not practical. Additional standpipe requirements are found in SFC 9405.1.

9404.2 Premises access. The fire department shall have access to fenced, gated, or locked grounds, piers, wharves or floats. Appropriate means of access (including keys and cardkeys) shall be provided in an *approved* secured lock box (Knox Box) on the premises in an *approved* location. The fire department shall be notified immediately of any changes in the means of access.

9404.3 Fire hydrants. At least two fire hydrants shall be provided. One hydrant shall be located within 500 feet (152,400 mm) of the closest point of fire department apparatus access to the shore end of the marina piers, wharves or floats, or to the fire department connection (FDC) for those piers, wharves or floats that are equipped with standpipes. The second fire hydrant shall be located within 1000 feet (304,800 mm) of the closest point of fire department apparatus access to the shore end of the marina piers, wharves, or floats, or to the FDC for those piers, wharves or floats that are equipped with standpipes.

> **Exception:** The requirements for fire hydrants may be modified if alternate arrangements are *approved* by the *fire code official*.

9404.4 Water supply. All required hydrants shall be capable of delivering not less than 1,000 gpm at a minimum residual pressure of 20 psi each.

Exception: The requirements for water supply may be modified if alternate arrangements are *approved* by the *fire code official*.

SECTION 9405
FIRE PROTECTION EQUIPMENT

9405.1 Standpipe systems. A manual Class I standpipe system (or class III standpipe system if *approved* by the *fire code official*) in accordance with NFPA Standard 14 shall be provided for piers, wharves, and floats if the hose lay distance from the fire apparatus to the most remote accessible portion of the pier, wharf, or float exceeds 150 feet (45,720 mm). *Approved* plastic pipe may be used if installed underwater, or other *approved* method of protection from fire is provided. The standpipe piping shall be a minimum of 4 inches (102 mm), sized to provide a minimum of 500 gpm at 130 psi at the most remote hose connection, with a simultaneous flow of 500 gpm at the third most remote hose connection on the same pier while maintaining a maximum system pressure of 175 psi. Existing standpipe systems providing equivalent performance to the specification listed above may be acceptable if *approved* by the *fire code official*.

9405.1.1 Hose connections. Hose connections on required standpipes shall be provided at the water end of the pier, wharf, or float, and along the entire length of the pier, wharf, or float at spacing not to exceed 150 feet (45,720 mm) and as close as practical to the land end.

Exception: The hose connection at the land end of the pier, wharf or float may be omitted if a hose connection is located within 150 feet (45,720 mm) of the fire apparatus access road.

Each hose connection shall consist of a valved 21/2-inch (64 mm) fire department hose outlet. Outlet caps shall have a predrilled 1/8-inch (3.2 mm) hole for pressure relief and be secured with a short length of chain or cable to prevent falling after removal. Listed equipment shall be used.

9405.2 Automatic sprinkler systems. Automatic sprinklers shall be provided for each separate covered boat moorage area exceeding 8,000 sq. ft. (743 m2) in projected roof area, excluding roof overhangs. A separate covered boat moorage area is one that has at least 16 feet uncovered horizontal separation from any part of any adjacent covered boat moorage area.

The sprinkler system shall be designed and installed in accordance with NFPA Standard 13 for Extra Hazard Group 2 occupancy.

Exception: Covered boat moorage already protected by an automatic sprinkler system is not required to be upgraded to Extra Hazard Group 2 criteria.

9405.2.1 Monitoring. Sprinkler systems shall be monitored by an *approved* central station.

9405.3 Smoke and heat vents: *Approved* automatic smoke and heat vents shall be provided in covered boat moorage areas exceeding 2,500 sq. ft. (232 m2) in area, excluding roof overhangs.

Exception: Smoke and heat vents are not required in areas protected by automatic sprinklers.

9405.3.1 Design and installation. If smoke and heat vents are required they shall be installed near the roof peak, evenly distributed and arranged so that at least one vent is over each covered berth. The effective vent area shall be calculated using a ratio of one square foot of vent to every 15 square feet of covered berth area (1:15). Each vent shall provide a minimum opening size of 4 ft. x 4 ft.

9405.3.1.1 Smoke and heat vents shall operate automatically by actuation of a heat-responsive device rated at between 100 degrees F (56 degrees C) and 220 degrees F (122 degrees C) above ambient.

Exception: Gravity-operated drop out vents.

9405.3.1.2 Gravity-operated drop out vents. Gravity operated dropout vents shall fully open within 5 minutes after the vent cavity is exposed to a simulated fire represented by a time-temperature gradient that reaches an air temperature of 500 degrees F (260 degrees C) within 5 minutes.

9405.4 Draft curtains. Draft curtains shall be provided in covered boat moorage areas exceeding 2,500 sq. ft. (232 m2) in area, excluding roof overhangs.

Exception: Draft curtains are not required in areas protected by automatic sprinklers.

9405.4.1 Draft curtain construction. Draft curtains shall be constructed of sheet metal, gypsum board or other *approved* materials that provide equivalent performance to resist the passage of smoke. Joints and connections shall be smoke tight.

9405.4.2 Draft curtain location and depth. The maximum area protected by draft curtains shall not exceed 2,000 sq. ft. (186 m2) or two slips or berths, whichever is smaller. Draft curtains shall not extend past the piling line. Draft curtains shall have a minimum depth of 2 feet (609 mm) below the lower edge of the roof and shall not extend closer than 8 feet (2438 mm) to the walking surface on the pier.

9405.5 Fire department connections. Standpipe and sprinkler systems shall be equipped with not less than one two-way 21/2-inch (64 mm) fire department connection (FDC), which shall be readily visible and located at the fire apparatus access road or other *approved* location. The FDC for class I standpipe systems may be located at the shore end of the pier, wharf, or float if the distance between the fire apparatus access road and FDC is less than 150 feet (45,720 mm). See also SFC 9404.3 Fire hydrants.

9405.6 Marina fire protection confidence testing. Standpipe and sprinkler systems shall be inspected and hydrostatically tested at least annually. Reports of inspections and tests shall be submitted to the Seattle Fire Department Confidence Testing Unit in accordance with Administrative Rule 9.02.07 *Confidence Test Requirements for Life Safety Systems.* Notwithstanding fire department inspections, maintenance and periodic testing are the owner's responsibility. All persons performing such work shall have a certificate from the fire department to perform such work. See Administrative Rule 9.01.07 *Certification for Installing, Maintaining and Testing Life Safety Systems and Equipment*.

9405.7 Moorage in intervening moorage space. Vessels moored in open spaces between covered moorage shall not exceed 7 feet (2,133.6 mm) from the top of the vessel superstructure to the waterline, unless protected by an *approved* fire partition.

SECTION 9406
EMERGENCY PLANS AND TRAINING

9406.1 Emergency plan. Owners or operators of piers, wharves, floats and marinas shall prepare and maintain a current emergency plan for the facility. The plan shall include procedures for fire department notification, fire evacuation, and include location of portable fire extinguishers and hose cabinets, sprinkler and standpipe system control valves, fire department connections and electrical disconnects.

9406.2 Signage. Signs, posters, or posted instructions shall be provided where practicable to remind the public of basic fire safety practices and to warn of unusual or extreme fire hazards. All boat owners at the marina shall be provided with written instructions for reporting fires and other emergencies and actions to be taken in the event of a fire.

9406.2 Point of Information

For examples of emergency plans, see information bulletins located at www.seattle.gov/fire titled Emergency Procedures for Public Occupancies and Fire Evacuation Planning.

9406.3 Employee training. Practice drills shall be held a minimum of twice a year.

9406.3.1 All employees shall know the location of fire-fighting equipment, and shall be instructed in the procedures for response to a fire or other emergency, response to a fire alarm, reporting a fire or other emergency to the proper authorities (and to designated facility employees), and in the employees' designated role(s) in emergency situations. See SFC 9406.

9406.3.2 All employees, including office personnel, shall be given training in the use of portable fire extinguishers.

9406.4 Fire department liaison. If requested by the Seattle Fire Department, management shall assist the fire department in pre-fire planning for the following:
(1) Entries and access routes for equipment within the premises,
(2) Location, construction, use, and accessibility of all buildings and all their subdivisions including basements, storage lockers, and other areas,
(3) Location and extent of outside working areas,
(4) Location and means of access to both dry and wet boat-storage areas,
(5) Type and capacity of standpipes on piers and walkways, including all points where connection of hydrant or pumper supplies can be affected,
(6) Types and capacities of facility equipment, including work or tow boats, portable pumps, pier-mounted hose cabinets, all portable fire extinguishers, and other equipment,
(7) Voltages and capacities of electrical systems, and location of electrical disconnecting means.

SECTION 9407
OPERATIONAL HAZARDS

9407.1 The marina or boatyard operator shall post in a prominent location or provide to boat operators using a marina or boatyard for mooring, repair, servicing, or storage, a list of safe operating procedures containing the following:
(1) Procedures for disposal of trash;
(2) Location of nonsmoking areas;
(3) Location of fire extinguishers and hoses;
(4) Procedures for turning in a fire alarm; and
(5) Fueling procedures.

9407.2 Fueling Operations. Fueling of floating marine craft with Class I fuels at other than a marine motor fuel-dispensing facility is prohibited. Fueling of floating marine craft with Class II or III fuels at other than a marine motor fuel-dispensing facility shall be in accordance with SFC 2210.4.

SECTION 9408
COMPLIANCE

9408.1 Compliance. All corrections that may be necessary to provide the minimum fire safety requirements established in this Chapter shall be completed by the owners as follows:
(a) The *fire code official* shall develop a procedure for surveying marinas to effect compliance with this Chapter. The *fire code official* shall send written and signed notices to the owners of all non- complying marinas. Within 120 days of the date of notification

by the *fire code official*, the owner shall submit to the *fire code official* a concept design and firm schedule for complying with the requirements of this chapter.

(b) The *fire code official* shall review the concept design and firm schedule and respond in writing. The time schedule for compliance shall be measured from the date of the *fire code official*'s response to the concept design and firm schedule for each marina, and shall not exceed the time limits set forth in subsection (c) of this section.

(c) The time limits for complying with the requirements of this Chapter are as follows:

Fire Extinguishers	1 year
Signage	1 year
Emergency Plan	1 year
Smoke and Heat Vents and Draft Curtains	7 years
Fire Hydrants	5 years
Standpipes	7 years
Sprinkler Systems	10 years

(d) Marinas will not be deemed to be in violation of this Chapter until the time limits set forth in subsection (c) above have expired. Appeals to compliance with this section shall be in accordance SFC 108.

Section 36. Appendix B of the 2009 International Fire Code is amended as follows:

***

B101.1 Scope. The procedure for determining fire-flow requirements for buildings or portions of buildings hereafter constructed and for buildings undergoing a substantial alteration as determined by the Department of Planning and Development shall be in accordance with this appendix. This appendix does not apply to structures other than buildings.

***

SECTION B103
MODIFICATIONS

B103.1 Decreases. The *fire code official*((~~chief~~))is authorized to reduce the fire-flow requirements for isolated buildings or a group of buildings in rural areas or small communities where the development of full fire-flow requirements is impractical.

B103.2 Increases. The *fire* *code official*((~~chief~~))is authorized to increase the fire-flow requirements where conditions indicate an unusual susceptibility to group fires or conflagrations. An increase shall not be more than twice that required for the building under consideration.

B103.3 Areas without water supply systems. For information regarding water supplies for fire-fighting purposes in rural and suburban areas in which adequate and reliable water supply systems do not exist, the *fire code official* is authorized to utilize NFPA 1142 or the *International Wildland-Urban Interface Code.*

B103.4 Deferment. The *fire code official* is authorized to defer enforcement of fire flow requirements to allow time for infrastructure upgrades to occur. Temporary mitigation measures as approved by the fire code official may be required for projects in areas with deficient fire flow.

***

SECTION B105
FIRE-FLOW REQUIREMENTS FOR BUILDINGS

B105.1 One- and two-family dwellings and townhouses. The minimum fire-flow and flow duration requirements for one- and two-family *dwellings* and townhouses having a fire-flow calculation area that does not exceed 3,600 square feet (344.5m2) shall be 1,000 gallons per minute (3785.4 L/min) for 1 hour. Fire-flow and flow duration for dwellings and townhouses having a fire-flow calculation area in excess of 3,600 square feet (344.5m2) shall not be less than that specified in Table B105.1.
Exception: A reduction in required fire-flow ((~~of 50 percent,~~)) as *approved* by the *fire code official*, is allowed when the building is equipped with an *approved automatic sprinkler system*.

B105.2 Buildings other than one- and two-family dwellings and townhouses. The minimum fire-flow and flow duration for buildings other than one- and two-family *dwellings* and townhouses shall be as specified in Table B105.1.
Exceptions:
1. A reduction in required fire-flow of up to 75 percent, as *approved*, is allowed when the building is provided with an *approved automatic sprinkler system* installed in accordance with Section 903.3.1.1 or 903.3.1.2. The resulting fire-flow shall not be less than 1,500 gallons per minute (5678 L/min) for the prescribed duration as specified in Table B105.1.
2. The resulting fire-flow shall not be less than 1,000 gallons per minute for the prescribed duration as specified in Table B105.1 for a building that consists only of Group R-1 or R-2 occupancies and their associated parking.

***

Section 37. Appendix D of the 2009 International Fire Code is amended as follows:

APPENDIX D
FIRE APPARATUS ACCESS ROADS

The provisions contained in this appendix are not mandatory unless specifically referenced in the adopting ordinance.

SECTION D101
GENERAL

D101.1 Scope. Fire apparatus access roads other than public streets shall be in accordance with this appendix and all other applicable requirements of the *International Fire Code*.

SECTION D102
REQUIRED ACCESS

D102.1 Access and loading. Facilities, buildings or portions of buildings hereafter constructed, substantially altered or moved into or within the jurisdiction shall be accessible to fire department apparatus by way of an *approved* fire apparatus access road with an asphalt, concrete or other *approved* driving surface capable of supporting the imposed load of fire apparatus weighing at least 75,000 pounds (34 050 kg).

SECTION D103
MINIMUM SPECIFICATIONS

((~~**D103.1 Access road width with a hydrant.** Where a fire hydrant is located on a fire apparatus access road, the minimum road width shall be 26 feet (7925 mm), exclusive of shoulders (see Figure D103.1).~~))

D103.1((~~2~~)) Grade. Fire apparatus access roads shall not exceed 10 percent in grade.
Exception: Grades steeper than 10 percent as *approved* by the *fire code official*((~~chief~~)).

D103.2((~~3~~)) Turning radius. The minimum turning radius shall be determined by the *fire code official*.

D103.3((4)) Dead ends. Dead-end fire apparatus access roads in excess of 150 feet (45 720 mm) shall be provided with width and turnaround provisions in accordance with Table D103.3((~~4~~)) and Figure D103.3. Required turnarounds shall be located no more than 150 ft. from the dead-end terminus of the fire apparatus road.

TABLE D103.3((4))
REQUIREMENTS FOR DEAD-END FIRE

APPARATUS ACCESS ROADS

[Table D103.4 not reproduced here. No amendments are proposed for the table, other than renumbering (editorial) to reflect Section D103.3 which it supports.]

***

FIGURE D103.3
DEAD-END FIRE APPARATUS ACCESS ROAD TURNAROUND

96 Foot Cul-de-sac

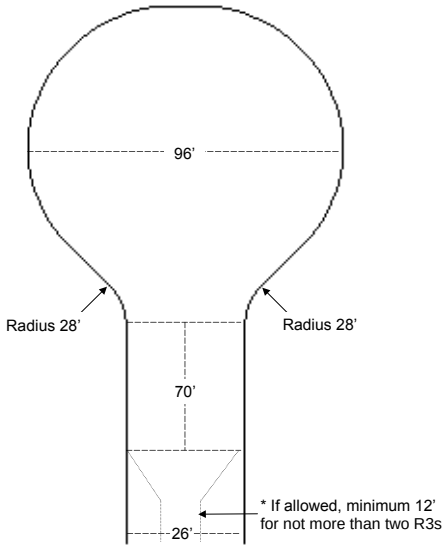

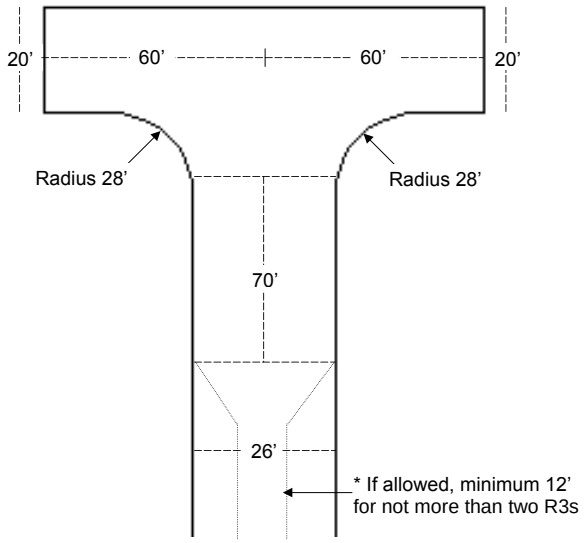

120 Foot Hammerhead

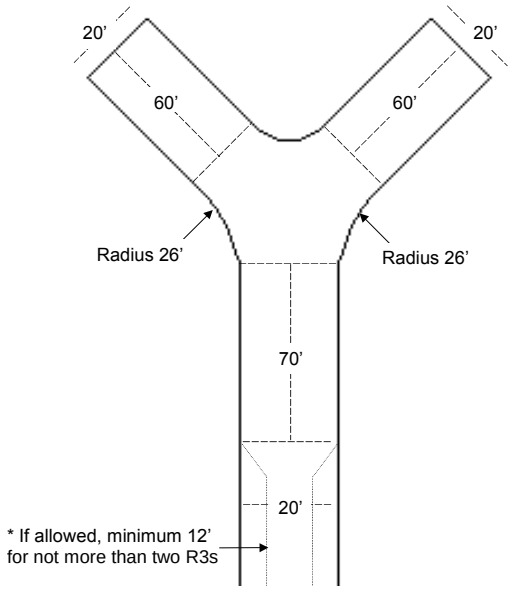

60 Foot Y – Acceptable Alternative to 120 Foot Hammerhead

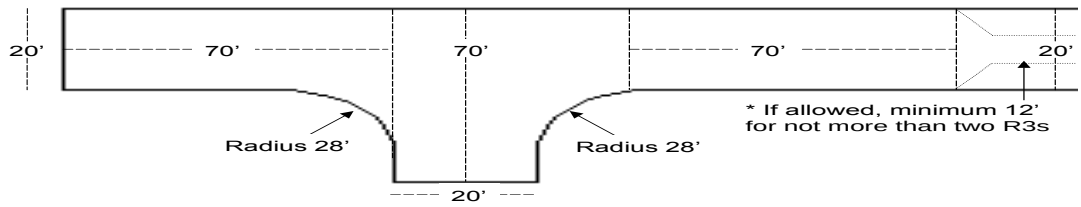

Acceptable Alternative to 120 Foot Hammerhead

D103.4~~((5))~~ Fire apparatus access road gates. Gates securing the fire apparatus access roads shall comply with all of the following criteria:

1. The minimum gate width shall be 20 feet (6096 mm).

   Exception: Access roads serving not more than two Group R-3 or Group U occupancies shall have an unobstructed width of not less than 12 feet.

2. Gates shall be of the swinging or sliding type.
3. Construction of gates shall be of materials that allow manual operation by one *person*.
4. Gate components shall be maintained in an operative condition at all times and replaced or repaired when defective.
5. Electric gates shall be equipped with a means of opening the gate by fire department personnel for emergency access. Emergency opening devices shall be *approved* by the *fire code official*.
6. Manual opening gates shall not be locked with a padlock or chain and padlock unless they are capable of being opened by means of forcible entry tools or when a key box containing the key(s) to the lock is installed at the gate location.
7. Locking device specifications shall be submitted for approval by the *fire code official*.

   Exception: Bollards are an approved alternate if they can be readily removed by one person, and they shall not be locked with a padlock or chain unless they are capable of being removed by means of a forcible entry toll or approved locking device.

8. Electric gate operators, where provided, shall be *listed* in accordance with UL 325.
9. Gates intended for automatic operation shall be designed, constructed and installed to comply with the requirements of ASTM F 2200.

D103.5((~~6~~)) Signs. Where required by the *fire code official*, fire apparatus access roads shall be marked with permanent NO PARKING—FIRE LANE signs complying with Figure D103.5((~~6~~)). Signs shall have a minimum dimension of 12 inches (305 mm) wide by 18 inches (457 mm) high and have red letters on a white reflective background. Signs shall be posted on one or both sides of the fire apparatus road as required by Section D103.5((~~6~~)).1 or D103.5((~~6~~)).2.

FIGURE D103.5((~~6~~))
FIRE LANE SIGNS

[Figure D103.6 not reproduced here. No amendments are proposed for the FIGURE, other than renumbering (editorial) to reflect Section D103.5 which it supports.]

***

D103.5((~~6~~)).1 Roads 12((~~20~~)) to 26 feet in width. Fire apparatus access roads 12((~~20~~)) to 26 feet wide (6096 to 7925 mm) shall be posted on both sides as a *fire lane*.

D103.5((~~6~~)).2 Roads more than 26 feet in width. Fire apparatus access roads more than 26 feet wide (7925 mm) to 32 feet wide (9754 mm) shall be posted on one side of the road as a *fire lane*.

SECTION D104
COMMERCIAL AND INDUSTRIAL DEVELOPMENTS

((~~**D104.1 Buildings exceeding three stories or 30 feet in height.** Buildings or facilities exceeding 30 feet (9144 mm) or three stories in height shall have at least two means of fire apparatus access for each structure.~~))

D104.1((~~2~~)) Buildings exceeding 62,000 square feet in area.
Buildings or facilities having a gross *building area* of more than 62,000 square feet (5760 m2) shall be provided with two separate and *approved* fire apparatus access roads.
Exception: Projects having a gross *building area* of up to 124,000 square feet (11 520m2) that have a single *approved* fire apparatus access road when all buildings are equipped throughout with *approved automatic sprinkler systems.*

D104.2((~~3~~)) Remoteness. Where two access roads are required, they shall be placed a distance apart equal to not less than one half of the length of the maximum overall diagonal dimension of the property or area to be served, measured in a straight line between accesses.

SECTION D105
AERIAL FIRE APPARATUS ACCESS ROADS

D105.1 Where required. Buildings or portions of buildings or facilities exceeding 30 feet (9144 mm) in height above the lowest level of fire department vehicle access shall be provided with *approved* fire apparatus access roads capable of accommodating fire department aerial apparatus. Overhead utility and power lines shall not be located in areas between the access road and the buildings or portions of buildings that would impede safe deployment of the aerial ladders.((~~within the aerial fire apparatus access roadway.~~))

Exceptions:

1. Buildings that are equipped throughout with an approved automatic sprinkler system.
2. One and two family dwellings.

***

Section 38. Appendix J of the 2009 International Fire Code is amended as follows:

***

J103.1.1 Radio signal strength. The building shall be considered to have acceptable emergency responder radio coverage if signal strength measurements in 95 percent of all areas on each floor of the building meet the signal strength requirements of Sections J103.1.1.1 and J103.1.1.2.

Exception: Critical areas, such as the emergency command center(s), the fire pump room(s), exit stairs, exit passageways, elevator lobbies, standpipe cabinets, sprinkler sectional valve locations, and other areas required by the *fire code official*, shall be provided with 99 percent floor area radio coverage.

J103.1.1.1 Minimum signal strength into the building. A minimum signal strength of three micro-volts shall be receivable within the building when transmitted from the King County Regional 800 MHz Radio System.

J103.1.1.2 Minimum signal strength out of the building. A minimum signal strength of one-half (.5) micro-volts shall be received by the King County Regional 800 MHz Radio System when transmitted from 95 percent of all areas of the building.

J103.1.((~~1~~))2 Amplification systems allowed. ((~~Buildings and structures that cannot support the required level of radio coverage shall be equipped with a radiating cable system, a distributed antenna system with Federal Communications Commission (FCC) certified signal boosters or other system approved by the *fire code official* in order to achieve the required adequate radio coverage.~~))Buildings and structures that cannot support the required level of radio coverage as listed above shall be equipped with either or both of the following in order to achieve the required adequate radio coverage:

1) A radiating cable system;

2) An internal multiple antenna system with FCC type accepted bi-directional 800 MHz amplifiers.

J103.1.((**2**))**3** ((~~**Technical criteria.** The *fire code official* shall maintain a document providing the specific technical information and requirements for the emergency responder radio coverage system. This document shall contain, but not be limited to, the various frequencies required, the location of radio sites, the effective radiated power of radio sites and other supporting technical information.~~))
Frequency range. The frequency range that must be supported is 806 MHz to 824 MHz and 851 MHz to 869 MHz and such other frequencies as determined by the King County Regional 800MHz Radio System in all areas of the building.

J103.1.3.1 Additional frequencies and change of frequencies.
The emergency responder radio coverage system shall be capable of modification or expansion in the event frequency changes are required by the FCC or additional frequencies are made available by the FCC. The building *owner* shall modify or expand the emergency responder radio coverage system at the owner's expense if frequency changes are required by the FCC or additional frequencies are made available by the FCC. Prior approval of a public safety radio coverage system on previous frequencies does not exempt the building owner from complying with this section.

J103.1.3.1 Point of Information
There is currently an ongoing national effort to eliminate current interference issues between cellular carriers and public safety bands in the 800 MHz band. This effort could revise the actual frequencies for public agencies within this band. The public safety radio enhancement system design shall be capable of being changed to accommodate updated frequencies in order to allow maintenance of the minimum system design criteria.

J103.1.4 Power Supplies. At least two independent and reliable power supplies shall be provided, one primary and one secondary.

J103.1.4.1 Primary Power Source. The primary power source shall be supplied from a dedicated branch circuit and comply with NFPA 72, *National Fire Alarm Code*.

J103.1.((~~**3**~~)) **4.2 Secondary power.** The emergency responder radio coverage system shall be equipped with a secondary source of power. The secondary source of power shall be either a battery system or an emergency generator. The secondary power supply shall supply power automatically when the primary power source is lost. The secondary source of power shall be capable of operating the emergency responder radio coverage system for a period of at least 12 hours.

J103.1.((~~3~~)).4.2.1 Battery systems. The active components of the installed system or systems shall be capable of operating on an independent battery system for a period of at least 12 hours without external power input. The battery system shall automatically charge in the presence of external power input. The battery system shall be contained in one NEMA 4 or 4X type enclosure.

J103.1.4.2.2 Generator. An engine-driven generator shall be arranged in accordance with NFPA 72, *National Fire Alarm Code*.

J103.1.5 System Monitoring.

J103.1.5.1 Fire Alarm System. The public safety radio enhancement system shall include automatic supervisory and trouble signals for malfunctions of the signal booster(s) and power supplies that are annunciated by the fire alarm system, as follows:
(1)The integrity of the circuit monitoring signal booster(s) and power supply(ies) shall comply with NFPA 72, *National Fire Alarm Code*.
(2)System and signal booster supervisory signals shall include the following:
(a)Antenna malfunction
(b)Signal booster failure
(3)Power supply supervisory signals shall include the following for each signal booster:
(a)Loss of normal ac power
(b)Failure of battery charger
(c)Low battery capacity, alarming at 70 percent of battery capacity

J103.1.4 Signal booster requirements. If used, signal boosters shall meet the following requirements:
1. All signal booster components shall be contained in a NEMA4-type waterproof cabinet.
2. The battery system shall be contained in a NEMA4- type waterproof cabinet.
3. The system shall include automatic alarming of malfunctions of the signal booster and battery system. Any resulting trouble alarm shall be automatically transmitted to an approved central station or proprietary supervising station as defined in NFPA 72 or, when approved by the *fire code official*, shall sound an audible signal at a constantly attended location.
4. Equipment shall have FCC certification prior to installation.

((~~**J103.1.5 Additional frequencies and change of frequencies.**~~
~~The emergency responder radio coverage system shall be capable of modification or expansion in the event frequency changes are required by the FCC or additional frequencies are made available by the FCC.~~))

J103.2 Installation requirements. The installation of the public safety radio coverage system shall be in accordance with Sections J103.2.1 through J103.2.5.

J103.2.1 Approval prior to installation. No amplification system capable of operating on frequencies ((~~licensed to any public safety agency by the FCC~~))assigned to the King County Regional 800 MHz Radio System shall be installed without prior coordination and approval of the King County Regional Communications Board and the *fire code official*.

J103.2.2 Permit required. A construction permit, as required by Section 105.7.5 of the *International Fire Code*, shall be obtained prior to the installation of the emergency responder radio coverage system.

J103.2.3 Minimum qualifications of personnel. The minimum qualifications of the system designer and lead installation personnel shall include:
1. A valid FCC-issued General Radio Operators License, and
2. Certification of in-building system training issued by the Associated Public-Safety Communications Officials International (APCO) or the National Association of Business and Education Radio (NABER) ((~~a nationally recognized organization or school~~)) or a certificate issued by the manufacturer of the equipment being installed. The agency may waive these requirements upon successful demonstration of adequate skills and experience satisfactory to the *fire code official*.

J103.2.4 Acceptance test procedure. ((~~When an emergency responder radio coverage system is required, and upon completion of installation, the building *owner* shall have the radio system tested to ensure that two-way coverage on each floor of the building is a minimum of 90 percent.~~))Acceptance testing for an in-building radio amplification system is required, upon completion of installation. It is the building owner's responsibility to have the radio system tested by qualified personnel to ensure a minimum of 95 percent two-way coverage on each floor of the building. The performance test shall include at minimum a floor plan and the signal strength in various locations of the building. Each owner shall submit a new field performance test report, whenever structural changes occur to the building that would materially change the original field performance tests.

J103.2.4 Point of Information
The Department of Planning and Development may not issue a Certificate of Occupancy if the building fails to comply with this section.

The test procedure shall be conducted as follows:
1. Each floor of the building shall be divided into a grid of ((~~20~~)) 40 approximately equal areas.
2. ((~~The test shall be conducted using a calibrated portable radio of the latest brand and model used by the agency talking through the agency's radio communications system.~~))Talk-back testing from a site to the King County Regional 800 MHz Radio System shall use a two watt, portable transceiver with speaker/microphone and flexible antenna. Field strength testing

instruments must have been calibrated within one year) of the date of the acceptance test. Field strength testing instruments must be of the frequency selective type incorporating a flexible antenna similar to the ones used on the hand held transceivers.
The City of Seattle's Radio System Manager may designate alternate methods of measuring the signal level, that satisfy appropriate levels of public safety grade coverage.
A representative of the Seattle Fire Department will oversee the acceptance test.
3. A maximum of two nonadjacent areas shall be allowed to fail the test.
4. In the event that three of the areas fail the test, in order to be more statistically accurate, the floor may be divided into ((~~40~~)) 80 equal areas. A maximum of four nonadjacent areas shall be allowed to fail the test. If the system fails the ((~~40~~))80 area test, the system shall be altered to meet the 90-percent coverage requirement.
5. A test location approximately in the center of each grid area shall be selected for the test, then the radio shall be enabled to verify two-way communications to and from the outside of the building through the King County Regional 800 MHz Radio System ((~~public agency's radio communications system.~~))Once the test location has been selected, that location shall represent the entire area. If the test fails in the selected test location, that grid area shall fail, and prospecting for a better spot within the grid area shall not be allowed.
6. The gain values of all amplifiers shall be measured and the test measurement results shall be kept on file with the building owner so that the measurements can be verified during annual tests. In the event that the measurement results become lost, the building owner shall be required to rerun the acceptance test to reestablish the gain values.
7. As part of the installation a spectrum analyzer or other suitable test equipment shall be utilized to insure spurious oscillations are not being generated by the subject signal booster. This test shall be conducted at time of installation and subsequent annual inspections.

J103.2.5 FCC compliance. The emergency responder radio coverage system installation and components shall also comply with all applicable federal regulations, including but not limited to, FCC 47 CFR 90.219.

J103.2.6 Continuing Operation/ Supervision. The occurrence of any fault in this radio system where the system function is decreased will result in the transmission of a supervisory signal to the central station. If the system cannot be fully restored within one hour, the *fire code official* will be notified.

J103.3 Maintenance. The emergency responder radio coverage system shall be maintained in accordance with Sections J103.3.1 through J103.3.((~~5~~))6.

J103.3.1 Maintenance. The public radio coverage system shall be maintained operational at all times.

J103.3.2 Permit required. A construction permit, as required by Section 105.7.5 of the *International Fire Code*, shall be obtained prior to the modification or alteration of the emergency responder radio coverage system.

J103.3.3 Testing and proof of compliance. The emergency responder radio coverage system shall be inspected and tested annually or whenever structural changes occur including additions or remodels that could materially change the original field performance tests. Testing shall consist of the following:
1. In-building coverage test as described in Section J103.2.4.
2. Signal boosters shall be tested to ensure that the gain is the same as it was upon initial installation and acceptance.
3. Backup batteries and power supplies shall be tested under load for a period of one hour to verify that they will properly operate during an actual power outage. If within the one-hour test period the battery exhibits symptoms of failure, the test shall be extended for additional one-hour periods until the integrity of the battery can be determined.
4. Amplifiers shall be tested to ensure that the gain is the same as it was upon initial installation and acceptance.
((~~4.~~)) 5.All other active components shall be checked to verify operation within the manufacturer's specifications.
((~~5.~~)) 6. At the conclusion of the testing a report which shall verify compliance with Section J103.3.4 shall be submitted to the *fire code official*.

((~~**J103.3.4 Additional frequencies.** The building *owner* shall modify or expand the emergency responder radio coverage system at his or her expense in the event frequency changes are required by the FCC or additional frequencies are made available by the FCC. Prior approval of a public safety radio coverage system on previous frequencies does not exempt this section.~~))

J103.3.4 Five-year tests. In addition to the annual test, it shall be the building owner's responsibility to perform a radio coverage test a minimum of once every five years to ensure that the radio system continues to meet the requirements of the original acceptance test.

J103.3.5 Field testing. Agency personnel shall have the right to enter onto the property at any reasonable time to conduct field testing to verify the required level of radio coverage.

J103.3.6 Qualifications of testing personnel. Personnel conducting radio system tests shall be qualified to perform the work. All tests shall be documented and signed by a person in possession of a current FCC General Radiotelephone Operator license, or a current technician certification issued by the

Associated Public-Safety Communications Officials International (APCO) or the National Association of Business and Education Radio (NABER).

***

Section 39. The National Fire Protection Association (NFPA) Standard 58, Liquefied Petroleum Gas Code, 2008 edition, is amended as follows:

***

6.5.1.3 The transfer of liquid into containers on the roofs of structures ((~~shall be permitted, provided that the installation conforms to the requirements contained in 6.6.7 through 6.17.11~~)) is prohibited.

***

6.6.3.4 ((~~Where~~))If a single ASME container complying with Table 6.6.3.3 is installed ((~~in isolated locations~~)) with ((~~non-fire-proofed~~)) steel supports resting on concrete pads or footings and the outside bottom of the container shell is ((~~not~~)) more than ((~~5 ft (1.5 m)~~)) 24 inches above the ((~~ground level~~))foundation the((~~approval of the authority having jurisdiction shall be obtained.~~))steel supports shall be protected against fire exposure with a material having a fire resistance rating of at least 2 hours. See Seattle Fire Code Chapter 447, ASTM Standard E 1529 for the performance requirements for fire-resistive assemblies.

***

6.6.4.3 Steel supports shall be protected against fire exposure with a material that has a fire resistance rating of at least 2 hours. ((~~except that continuous steel skirts that have only one opening that is 18 in. (460 mm) or less in diameter shall have fire protection applied to the outside of the skirts.~~))

***

6.6.7.1 Installation of containers on roofs of buildings, including parking garages, ((~~shall be~~))is prohibited((~~, unless approved by the authority having jurisdiction and the fire department~~)).

***

6.19.1.2 Cylinders in use shall mean connected for use.
(A) The use of cylinders indoors shall be only for the purposes specified in 6.19.4 through 6.19.9.
(B) The use of cylinders indoors shall be limited to those conditions where operational requirements make the indoor use of cylinders necessary and location outside is impractical.
((~~(C) The use of cylinders on roofs shall be limited to those conditions where operational requirements make use of cylinders necessary and location other than on roofs of buildings or structures is impractical.~~
~~(D)~~))(C) Liquid LP-Gas shall be piped into buildings or structures only for the purposes specified in 6.9.1.1(4).

***

6.17.3.5 ((~~Where~~))If located on a floor, ((~~roof,~~))or balcony, cylinders shall be secured to prevent falling over the edge.

***

6.19.4.8 If heaters are connected to cylinders manifolded together for use in an unpartitioned area on the same floor, the total water capacity of cylinders manifolded together serving any one heater shall not be greater than 735 lb (333 kg) [nominal 300 lb (136 kg) LP-Gas capacity]. If there is more than one such manifold, it shall be separated from any other by at least 20 ft (6.1 m).

Maximum individual LP-Gas cylinder capacities and aggregate quantities of LP-Gas allowed within buildings undergoing construction or renovation or used for temporary heating shall be in accordance with the Seattle Fire Code Section 3803.2.1.2.

***

6.19.6.1 Cylinders used in buildings housing industrial occupancies for processing, research, or experimental purposes shall comply with 6.19.6.1(A) and 6.19.6.1(B).

(A) If cylinders are manifolded together, the total water capacity of the connected cylinders shall be not more than 735 lb (333 kg) [nominal 300 lb (136 kg) LP-Gas capacity]. If there is more than one such manifold in a room, it shall be separated from any other by at least 20 ft (6.1 m).
(B) The amount of LP-Gas in cylinders for research and experimental use in the building shall be limited to the smallest practical quantity and shall not exceed the quantity limits set forth in Seattle Fire Code Section 3803.2.1.3.

***

6.19.7.2 ((~~Where~~))If cylinders are used in ((~~buildings housing educational and institutional~~))Group B, E and I laboratory occupancies for research and experimental purposes, the following ((~~shall~~))apply:
(1) The maximum water capacity of individual cylinders used ((~~shall be~~)) is 50 lb (23 kg) [nominal 20 lb (9.1 kg) LP-Gas capacity] if used in ((~~educational~~))Group B and E occupancies and 12 lb (5.4 kg) [nominal 5 lb (2 kg) LP-Gas capacity] if used in ((~~institutional~~)) Group I occupancies.
(2) If more than one such cylinder is located in the same room, the cylinders shall be separated by at least 20 ft (6.1 m).
(3) Cylinders not connected for use shall be stored in accordance with Chapter 8.
(4) Cylinders shall not be stored in a laboratory room.

***

6.19.11.1 ((~~Where cylinders are installed permanently on roofs of buildings, the buildings shall be of fire-resistant construction or noncombustible construction having essentially noncombustible contents, or other construction or contents that are protected with automatic sprinklers.~~
~~(A) The total water capacity of cylinders connected to any one manifold shall be not greater than 980 lb (445 kg) [nominal 400 lb (181 kg) LP-gas capacity]. If more than one~~

~~manifold is located on the roof, it shall be separated from any other by at least 50 ft. (15m).~~

~~(B) Cylinders shall be located in areas where there is free air circulation, at least 10 ft (3m) from building openings such as windows and doors), and at least 20 ft (6.1 m) from air intakes of air-conditioning and ventilating systems.~~

~~(C) Cylinders shall not be located on roofs that are entirely enclosed by parapets more than 18 in. (460 mm) high unless the parapets are breached with low-level ventilation openings no more than 20 ft (6.1 m) apart, or all openings communicating with the interior of the building are at or above the top of the parapets.~~

~~(D) Piping shall be in accordance with 6.17.2.4 through 6.17.2.6.~~

~~(E) Hose shall not be used for connection to cylinders.~~

(F) ~~The fire department shall be advised of each installation.~~))

LP-gas containers are prohibited on the roofs of buildings including parking garages.

Exceptions:

1. Temporary installations allowed in accordance with Section 6.19.2.
2. A single LP-gas container having an individual water capacity not exceeding 48 lbs. (nominal 20 lbs. LP-gas) connected to a LP-gas grill if a portable fire extinguisher having a minimum rating of 20-B is located within 30 feet of the grill.

***

6.25.3.1 Fire protection shall be provided for installations with an aggregate water capacity of more than 4000 gal (15.1 m3) ((~~ and of ASME containers on roofs~~)).

***

8.4.1.1. Storage outside of buildings for cylinders awaiting use, resale, or part of a cylinder exchange point shall be located as follows:

(1) At least 5 ft (1.5 m) from any one doorway or opening in a building frequented by the public ((~~where~~))if occupants have at least two means of egress as defined by NFPA 101, Life Safety Code. A minimum 10 ft (3 m) setback is required from the second doorway or opening in the building.

(2) At least 10 ft (3 m) from any doorway or opening in a building or sections of a building that has only one means of egress.

(3) At least 20 ft (6.1 m) from any automotive service station fuel dispenser.

Section 40. The National Fire Protection Association (NFPA) Standard 130, Standard for Fixed Guideway Transit and Passenger Rail Systems, 2010 edition, is amended as follows:

***

1.3.4 This standard ((~~shall apply~~))applies as a basis for fixed guideway transit and passenger rail systems ((~~where~~))if nonelectric and combination electric/other (such as diesel) vehicles are used. ((~~Where~~))If such vehicles are not passenger-carrying vehicles or are buses((~~ or trolley~~

~~coaches~~)), the standard ((~~shall~~))does not apply to those vehicles, but ((~~shall~~))does apply to the fixed guideway transit and passenger rail system in which such vehicles are used.

***

3.2.2* Authority Having Jurisdiction (AHJ). ~~An organization, office, or individual responsible for enforcing the requirements of a code or standard, or for approving equipment, materials, an installation, or a procedure.~~ The fire chief or other designated authority charged with the administration of the fire code, or a duly authorized representative.

***

4.4.1 Emergency power assumptions. The emergency power requirements addressed in this standard assume a fire or other emergency event within the station or trainway concurrent with a power outage of the primary source of electrical power unrelated to the event within the transit system.

***

4.6* Fire Scenarios. Design scenarios shall consider the location and size of a fire or a fire-related emergency and shall be *approved*.

***

5.1.1.1.1 Fixed guideway transit and passenger rail stations are classified as Group A, Division 3 occupancies in accordance with the 2009 *Seattle Building Code* and 2009 *Seattle Fire Code*.

5.1.1.1.2 Enclosed fixed guideway transit and passenger rail stations shall be posted with the occupancy load in accordance with Section 1004.3 of the 2009 *Seattle Fire Code*.

***

5.1.1.4 Fixed guideway transit and passenger rail stations shall comply with the applicable provisions of Section 1113 of the 2009 *Seattle Building Code*.

***

5.2.1 Safeguards During Construction. During the course of construction or major modification of any structure, provisions of ((~~NFPA 241,*Standard for Safeguarding Construction, Alteration, and Demolition Operations*~~)) Chapter 14 of the 2009 *Seattle Fire Code* and Chapter 33 of the 2009 *Seattle Building Code* ((~~shall~~))apply.

***

5.2.2.1 Building construction for all new enclosed stations shall be not less than Type I or Type II or combinations of Type I and Type II noncombustible construction as defined in Chapter 6 of the 2009 *Seattle Building Code* ((~~NFPA 220, in accordance with the requirements of NFPA~~

~~*101*, Chapter 12~~)), for the station configuration, or as determined by an engineering analysis of potential fire exposure hazards to the structure.

***

5.2.2.2 Other types of construction ((~~as defined in NFPA 220 shall be~~))is permitted for open stations in accordance with the provisions of ((~~NFPA*101*, Chapter 12~~)) Chapter 6 of the 2009 *Seattle Building Code*, for corresponding station configurations.

***

5.2.3.1.1* Stair and Escalator Enclosure. Stairs and escalators regularly used by passengers for circulation during normal revenue service in enclosed stations equipped throughout with an automatic sprinkler system ((~~shall not be~~))are not required to be enclosed if the station is constructed in accordance with Chapter 7 of the 2009 *Seattle Building Code*. All required exit stairs shall be enclosed in accordance with Chapter 10 of the 2009 *Seattle Building Code*.

***

5.2.3.3 Ancillary Spaces. Fire resistance ratings of separations between ancillary occupancies shall be established ((~~as required by NFPA *101*~~)) in accordance with Chapter 7 of the 2009 *Seattle Building Code* ((~~NFPA 251~~)).

***

5.3.1 Smoke control system. A smoke control system shall be provided in underground fixed guideway transit and passenger rail stations in accordance with Section 909 of the 2009 *Seattle Fire Code*. Smoke control shall restrict movement of smoke to the general area of fire origin and non-occupied exhaust areas and maintain tenability in the means of egress.

***

((~~**5.4.11 Emergency Power.** Emergency power in accordance with Article 700 of *NFPA 70*, and Chapter 4 of NFPA 110 shall be provided for enclosed stations.~~))

5.4.11* Emergency Power Supply System (EPSS). Underground and enclosed stations shall be provided with a Class 2 , Type 60, Level 1 Emergency Power Supply System (EPSS) in accordance with Article 700 of NFPA 70 and Chapter 4 of NFPA 110.

A.5.4.11 The class defines the minimum time, in hours, that the Emergency Power Supply System (EPSS) is designed to operate at its rated load without being refueled or recharged. The type defines the maximum time, in seconds, that the EPSS will permit the load terminals of the transfer switch to be without acceptable electrical power. NFPA 110 recognizes two levels of EPSS equipment installation, performance and maintenance. Level 1 systems shall be installed where failure of the EPSS to perform could result in loss of human life or serious injuries.

***

5.4.11.4 The following systems shall be connected to the emergency power supply system:

((~~(1)Emergency lighting~~
~~(2)Protective signaling systems~~
~~(3)Emergency communication system~~
~~(4)Fire command center~~))
(1) Exit signs and means of egress illumination
(2) Elevator car lighting.
(3) Emergency voice/alarm communications systems.
(4) Automatic fire detection systems.
(5) Fire alarm systems.
(6) Power and lighting for the fire command center.
(7) Lighting for mechanical rooms.
(8) Electrically powered fire pumps.
(9) Ventilation and automatic fire detection equipment for smoke proof enclosures.
(10) Smoke control systems.
(11) A selected elevator in each bank of elevators in accordance with *Seattle Building Code* Section 3016.7. A bank of elevators is a group of elevators or a single elevator controlled by a common operating system—all elevators that respond to a single call button constitute a bank of elevators. All elevators shall be transferable to emergency power.

***

5.5.1 General. The provisions for means of egress for a station shall comply with ((C~~hapter 7 and Chapter 12 of NFPA 101~~)) Chapter 10 of the 2009 *Seattle Building Code*, except as herein modified.

***

5.5.1.3.3 Every required stairway in enclosed stations serving floor levels more than 30 feet (9144 mm) below its level of exit discharge, except those regularly used by passengers shall comply with the requirements for a smokeproof enclosure in Section 1020.1.7 of the 2009 *Seattle Building Code*.

***

5.5.5.1 The occupant load for a station shall be based on whichever is greater:
(1) T((~~t~~))he train load of trains simultaneously entering the station on all tracks in normal traffic direction plus the simultaneous entraining load awaiting a train or;
(2) The number of occupants computed at the rate of one occupant per unit of area as follows:

- 7 sq. ft. for underground structures
- 15 sq. ft. for surface structures and elevated structures.

***

5.5.5.5 ((~~Where~~))If an area within a station is intended for use by other than passengers or employees, the occupant load for that area shall be determined in accordance with the provisions

of Chapter 10 of the 2009 *Seattle Building Code* ((~~NFPA *101*~~)) as appropriate for the class of occupancy.

***

5.5.6.1 Platform Evacuation Time. There shall be sufficient egress capacity to evacuate the platform occupant load as defined in 5.5.2.8 from the station platform in 4 minutes or less, but in no case shall the required egress width (excluding escalators) be less than prescribed by Section 1005 of the 2009 *Seattle Building Code*.

***

5.5.6.3.2.4* Escalators ((~~shall not~~))may account for ((~~more than~~)) up to one half of the required means of egress capacity at any one level for purposes of calculating platform evacuation time if the following criteria are met:

(1) The escalators are capable of being remotely brought to a stop in accordance with the requirements of 5.5.2.1(3)(b), 5.5.2.1(4), and 5.5.2.1(5).

(2) A portion of the means of egress capacity from each station level is comprised of stairs.

5.5.6.3.2.5 ((~~Escalators shall be permitted to account for more than one-half of the required means of egress capacity at any one level where the following criteria are met:~~

~~(1) The escalators are capable of being remotely brought to a stop in accordance with the requirements of 5.5.2.1(3)(b), 5.5.2.1(4), and 5.5.2.1(5).~~

~~(2) A portion of the means of egress capacity from each station level is comprised of stairs.~~

~~(3)~~)) For enclosed stations, at least one enclosed exit stair or exit passageway shall provide continuous access from the platforms to ((~~the~~))a public way.

***

((~~**5.5.6.3.3 Elevators.**~~

~~**5.5.6.3.3.1** Elevators meeting the requirements of sections 5.5.6.3.3.2 through 5.5.6.3.3.4 shall be permitted to account for part of the means of egress capacity in stations.~~

~~**5.5.6.3.3.2 Capacity and Numbers.** Where elevators are counted as contributing to the means of egress capacity, the following shall apply:~~

~~(1)They shall comprise no more than 50 percent of the required egress capacity.~~

~~(2)*At least one elevator shall be considered out of service, and one elevator shall be reserved for fire service.~~

~~(3)*The capacity of each elevator shall be the carrying capacity of the elevator within 30 minutes.~~

~~**5.5.6.3.3.3 Holding Area.** Elevators counted as contributing to the means of egress capacity shall be accessed via holding areas or lobbies that shall be designed as follows:~~

~~(1)The holding areas or lobbies shall be separated from the platform by a smoke-tight fire separation having a fire resistance rating of at least 1 hour, but not less than the time required to evacuate the holding area occupant load.~~

~~(2)At least one stair shall be accessible from the holding area.~~

~~(3)The holding area shall be sized to accommodate one person per 0.46 m2 (5 ft2).~~

~~(4)If the holding area includes portions of the platform, the area within 460 mm (18 in.) of the trainway shall not be considered in the calculation.~~
~~(5)Upon activation of smoke control in the platform or adjacent trainway areas, the holding area shall be pressurized to a minimum of 25 Pa (or 0.051 in. of water gauge).~~
~~(6)The holding area shall be provided with emergency voice alarm devices with two-way communication to the system operations control center.~~
~~**5.5.6.3.3.4 Design Features**. Elevators counted as contributing to the means of egress capacity shall be designed as follows:~~
~~(1)Shaft enclosures shall be constructed as smoketight fire separations having a 2-hour fire resistance rating.~~
~~(2)*The design shall limit water flow into the shaft.~~
~~(3)No more than two elevators used for means of egress or fire department access shall share the same machine room.~~
~~(4)Machine rooms shall be separated from each other by fire separations having a minimum fire resistance rating of 2 hours.~~
~~(5)The elevators shall be connected to emergency power.~~
~~(6)*During emergency evacuation, the elevators shall travel only between the incident platform level and a point of safety.~~))

***

5.5.6.3.4.3 Emergency exit gates shall comply with Chapter 10 of the 2009 *Seattle Building Code*. ((~~be in accordance with NFPA *101*.~~)) and the clear width of the exit walkway shall be maintained.

***

5.5.6.3.5.2 Turnstile-type fare collection equipment shall be permitted in accordance with ((~~NFPA *101*~~)) Chapter 10 of the 2009 *Seattle Building Code* and shall account for a capacity of 25 ppm for egress calculations.

***

5.6.1 Stations shall be provided with a system of emergency lighting in accordance with ((~~NFPA *10* ,~~)) Section 1006 of the 2009 *Seattle Building Code*, except as otherwise noted herein.

***

5.6.2 Means of egress shall be provided with a system of emergency lighting in accordance with Chapter 10 of the 2009 *Seattle Building Code* ((~~Section 7.9 of NFPA *101*~~)), except as otherwise noted in this standard.

***

5.7.3.1 An automatic sprinkler ((~~protection~~)) system shall be provided ((~~in~~))throughout all areas of enclosed fixed guideway transit and passenger rail stations ((~~used for concessions, in storage areas, in trash rooms, and in the steel truss area of all escalators and other similar areas with combustible loadings, except trainways~~)).

***

((~~**5.7.3.1.1** Sprinkler protection shall be permitted to be omitted in areas of open stations remotely located from public spaces.~~))

***

5.7.3.4 Other fire suppression systems, if *approved*, ((~~shall be permitted to~~))may be substituted for automatic sprinkler systems((~~ in the areas listed in 5.7.3.1~~)).

***

5.7.4.1.1 ((~~Class of service shall be determined by the authority having jurisdiction. (SeeA.5.7.4.30)~~)) Elevated transit stations shall be equipped throughout with a Class I standpipe system.

***

5.7.4.2.1 Hydraulic design information signs shall be provided at each fire department connection indicating the residual inlet pumping pressure(s) required for the hydraulically most remote and/or other selected hose connection outlet location(s).

***

5.7.4.3* Fire department connections for fire department use in supplying the standpipe system shall be located ((~~as follows:~~)) in accordance with Seattle Fire Department Administrative Rule 9.03.09, *Automatic Sprinkler and Standpipe Systems* and any future revisions of this rule adopted by the *fire code official*.
((~~1. within 30.5 m (100 ft)of vehicular access and~~
~~2. within operating distance of fire hydrants as determined by the local authority having jurisdiction~~)).

***

5.7.6.1 Underground stations shall be provided with a fire command center in accordance with NFPA 72 and Section 509 of the 2009 *Seattle Fire Code*.

***

5.9.1.1 Interior wall and ceiling finish materials in enclosed stations shall be either noncombustible or shall comply with Chapter 8 of the 2009 *Seattle Fire Code* ((~~one of the following:~~

~~(1)Interior wall and ceiling finish materials shall be noncombustible materials.~~
~~(2)Interior wall and ceiling finish materials, other than textile wall coverings or foam plastic insulation, shall exhibit a flame spread index not exceeding 25 and a smoke developed index not exceeding 450, when tested by ASTM E 84.~~))

***

((~~**5.9.1.2** Interior wall and ceiling finish materials, when tested in accordance with NFPA 286, shall comply with the following:~~
~~(1) Flames shall not spread to the ceiling during the 40 kW (135 kBtu/hr) exposure.~~
~~(2) During the 160 kW (545 kBtu/hr) exposure, the following criteria shall be met:~~

~~(a) Flame shall not spread to the outer extremities of the sample on the 2.45 m× 3.7 m (8 ft × 12 ft) wall.~~
~~(b) The peak heat release rate shall not exceed 800 kW (2730 kBtu/hr).~~
~~(c) Flashover shall not occur.~~
~~(3) The total smoke released throughout the test shall not exceed 1000 m2 (10, 764 ft2).~~))

***

5.9.2.1 Interior finish in open stations shall comply with the requirements of ((~~NFPA *101*, Chapter 12~~)) Chapter 8 of the 2009 *Seattle Fire Code*.

***

5.10 Rubbish Containers. Rubbish containers shall ((~~be manufactured of noncombustible materials.~~)) comply with Section 304 of the 2009 *Seattle Fire Code*.

***

6.2.1.2 System egress ((~~points~~))walk surfaces shall be illuminated at a level of not less than 2.69 lx (0.25 ft-candles) or as *approved* by the authority having jurisdiction.

***

6.2.1.9* The means of egress within the trainway shall be provided with an unobstructed clear width graduating from the following:

(1)~~610 mm (24 in.)~~ 760 mm (30 in.) at the walking surface to
(2)~~760 mm (30 in.)~~ 910 mm (36 in.) at 1420 mm (56 in.) above the walking surface to
(3)~~610 mm (24 in.)~~ 760 mm (30 in.) at 2025 mm (80 in.) above the walking surface

***

6.2.2.1 General. Exit stairs and doors shall comply with Chapter 10 of the 2009 *Seattle Building Code* ((~~7 of NFPA *101*~~)), except as herein modified.

***

~~((**6.2.2.2.2** For exit stairs serving underground or enclosed trainways, the width of exit stairs shall not be required to exceed 1120 mm (44 in.).~~))

***

~~((**6.2.2.5 Exit Hatches.**~~
~~**6.2.2.5.1** Exit hatches shall be permitted in the means of egress, provided the following conditions are met:~~
~~(1) Hatches shall be equipped with a manual opening device that can be readily opened from the egress side.~~
~~(2) Hatches shall be operable with not more than one releasing operation.~~

~~(3) The force required to open the hatch when applied at the opening device shall not exceed 130 N (30 lb).~~
~~(4) The hatch shall be equipped with a hold-open device that automatically latches the door in the open position to prevent accidental closure.~~
~~**6.2.2.5.2** Exit hatches shall be capable of being opened from the discharge side to permit access by authorized personnel.~~
~~**6.2.2.5.3*** Exit hatches shall be conspicuously marked on the discharge side to prevent possible blockage.~~))

***

6.2.5.2 Lighting systems for enclosed trainways described in 6.2.5.1 shall be installed in accordance with ((~~Sections 7.8 and 7.9 of NFPA 101~~)) Chapter 10 of the 2009 *Seattle Building Code*, except as otherwise noted in this standard.

***

6.3.3.2.11* Emergency Power Supply System (EPSS). Enclosed trainways shall be provided with a Class 2 , Type 60, Level 1 Emergency Power Supply System (EPSS) ((~~such that, in the event of failure of the normal supply to, or within, the system, emergency power shall be provided with emergency power~~)) in accordance with Article 700 of *NFPA 70*, and Chapter 4 of NFPA 110. The supply system for emergency purposes, in addition to the normal services to the trainway, shall be one or more of the types of systems described in subsections 700.12(A) through 700.12(E) of *NFPA 70*.

A.6.3.3.2.11 The class defines the minimum time, in hours, that the Emergency Power Supply System (EPSS) is designed to operate at its rated load without being refueled or recharged. The type defines the maximum time, in seconds, that the EPSS will permit the load terminals of the transfer switch to be without acceptable electrical power. NFPA 110 recognizes two levels of EPSS equipment installation, performance and maintenance. Level 1 systems shall be installed where failure of the EPSS to perform could result in loss of human life or serious injuries.

6.3.3.2.11.1 The following systems shall be connected to the emergency power supply system:
((~~(1)Emergency lighting~~
~~(2)Protective signaling systems~~
~~(3)Emergency communication system~~
~~(4)Fire command center)~~)

(1) Exit signs and means of egress illumination
(2) Elevator car lighting.
(3) Emergency voice/alarm communications systems.
(4) Automatic fire detection systems.

(5) Fire alarm systems.
(6) Power and lighting for the fire command center.
(7) Lighting for mechanical rooms containing critical equipment.
(8) Electrically powered fire pumps.
(9) Ventilation and automatic fire detection equipment for smoke proof enclosures.
(10) Smoke control systems.
(11) A selected elevator in each bank of elevators in accordance with *Seattle Building Code* Section 3016.7. A bank of elevators is a group of elevators or a single elevator controlled by a common operating system—all elevators that respond to a single call button constitute a bank of elevators. All elevators shall be transferable to emergency power.

***

6.5.2.1 An *approved* fire standpipe system shall be provided ((~~in~~)) for ((~~underground~~)) fixed guideway transit and passenger rail system trainways where physical factors prevent or impede access to the water supply or fire apparatus, ((~~where~~))if required by the *authority having jurisdiction*.

***

6.5.2.4.3 Hydraulic design information signs shall be provided at each fire department connection indicating the residual inlet pumping pressure(s) required for the hydraulically most remote and/or other selected hose connection outlet location(s).

***

6.5.2.6 Four-way 2.5 inch fire department connections shall be provided at all emergency access points.

6.5.2.7 Standpipes shall be sized to provide 1000 gpm. Hydraulic calculations shall be based on 500 gpm at 130 psi at the hydraulically most remote hose connection, with a simultaneous flow of 500 gpm at the next hydraulically most remote hose connection. The maximum calculated pressure at any point in the system shall not exceed 350 psi.

6.5.2.8 Standpipes shall be interconnected at all tunnel cross passageways and within the stations, with isolation valves provided for each interconnection.

6.5.2.9 Hose connection outlets shall be provided at maximum 200 feet spacing.

***

6.6.7.6 Tanks shall be abandoned in accordance with the provisions of Chapter 34 of the 2009 *Seattle Fire Code*.((~~Annex C of NFPA 30.~~))

***

7.2.4 ((~~Criteria for the system reliability analysis in 7.2.3(6) shall be established and approved.~~)) The design analysis shall address the performance of the system with one fan out-of-service.

((~~**7.2.4.1** The analysis shall consider as a minimum the following events:~~

~~(1) Fire in trainway or station~~
~~(2)Local incident within the electrical utility that interrupts power to the emergency ventilation system~~
~~(3)Derailment~~))

***

((~~**7.7.1** The design of the power for the emergency ventilation system shall comply with the requirements of Article 700 of *NFPA 70*.~~))

7.7.1* The emergency ventilation system shall be provided with a Class 2 , Type 60, Level 1 Emergency Power Supply System (EPSS) in accordance with Article 700 of *NFPA 70*, and Chapter 4 of NFPA 110.

A.7.7.1 The class defines the minimum time, in hours, for the Emergency Power Supply System (EPSS) is designed to operate at its rated load without being refueled or recharged. The type defines the maximum time, in seconds, that the EPSS will permit the load terminals of the transfer switch to be without acceptable electrical power. NFPA 110 recognizes two levels of EPSS equipment installation, performance and maintenance. Level 1 systems shall be installed where failure of the EPSS to perform could result in loss of human life or serious injuries.

~~**7.7.1.1** Alternatively, the design of the power for the emergency ventilation system shall be permitted to be based upon the results of the electrical reliability analysis as per 7.2.3(6), as approved.~~

***

8.8.2.1 A means to allow passengers to safely board the vehicle (rescue train) from a walk surface or other suitable area under the supervision of authorized employees in case of an emergency shall be provided.

***

10.3.2 ((~~Wherever necessary for reliable communications, a separate~~))If required by the authority having jurisdiction, an emergency responder radio ((~~network capable of two-way radio communication for fire department personnel to the fire department communication center~~)) system shall be provided in accordance with Section 510 of the 2009 *Seattle Fire Code*.

***

10.6.1.1 If required by the authority having jurisdiction, stations shall be provided with an *approved* Emergency Communication System in accordance with the 2010 edition of *NFPA 72*.

***

Section 41. The National Fire Protection Association (NFPA) Standard 502, Standard for Road Tunnels, Bridges, and other Limited Access Highways, 2008 edition, is amended as follows:

***

3.2.2* Authority Having Jurisdiction (AHJ). ~~An organization, office, or individual responsible for enforcing the requirements of a code or standard, or for approving equipment, materials, an installation, or a procedure.~~ The fire chief or other designated authority charged with the administration of the fire code, or a duly authorized representative.

***

4.2 Safeguards During Construction. During the course of construction or alteration of any facility addressed in this standard, the provisions of ((~~NFPA 241~~))Chapter 14 of the 2009 *Seattle Fire Code* and Chapter 33 of the 2009 *Seattle Building Code* shall apply, except as modified herein.

***

4.3.2* Limited Access Highways. Fire protection for limited access highways shall comply with the requirements of Chapter 5 and Chapter 9.

4.3.3 Bridges and Elevated Highways. Fire protection for bridges and elevated highways shall comply with the requirements of Chapter 6 and Chapter 9.

4.3.4* Depressed Highways. ((~~Standpipe systems or fire extinguishers, or both, shall be installed on depressed highways where physical factors prevent or impede access to the water supply or fire apparatus.~~))Fire protection for depressed highways shall comply with the requirements of Chapter 5 and Chapter 9.

4.3.5* Road Tunnels. Fire protection for road tunnels shall comply with the requirements of Chapter 7 and Chapter 9.

4.3.6* Roadway Beneath Air-Right Structures. Fire protection for roadways that are located beneath air-right structures shall comply with the requirements of Chapter 8 and Chapter 9.

***

4.5 Emergency Communications.
Emergency communications, ((~~where~~))if required by the authority having jurisdiction, shall be provided by the installation of outdoor-type emergency telephone boxes, ((~~coded alarm telegraph stations,~~)) radio transmitters, or other approved devices that meet the following requirements:
(1) They shall be made conspicuous by means of indicating lights or other approved markers.

(2) They shall be identified by a readily visible number plate or other approved device.
(3) They shall be posted with instructions for use by motorists.
(4) Where practicable, t((~~T~~))hey shall be located in approved locations so that motorists can park vehicles clear of the travel lanes.
(5) Emergency communication devices shall be protected from physical damage from vehicle impact.
(6) Emergency communication devices shall be connected to an approved constantly attended location.

***

Chapter 5 Limited Access and Depressed Highways

((~~**5.3* Fire Hydrants. (Reserved)**~~))***

6.3* ((~~**Standpipe**~~)) **Fire Hydrants and Water Supply.** Where the distance from ~~an~~ ((~~acceptable water supply source as defined in 9.2.3 to~~)) any point on the bridge or elevated highway exceeds 120 m (400 ft) to a fire hydrant, the bridge or elevated highway shall be provided with a ((~~standpipe~~)) hydrant system in accordance with the requirements of Chapter 9.

***

6.5 Control of Hazardous Materials. Where required by the authority having jurisdiction, control of hazardous materials shall be in accordance with the requirements of Chapter 13.

***

7.4 Fire Alarm and Detection.

7.4.1 ((~~At least two systems to detect, identify, or locate a fire in a tunnel shall be provided, including one manual means meeting the requirements of 7.4.1.2 and either a closed-circuit television (CCTV) system in accordance with 7.4.1.3 or an automatic fire detection system in accordance with 7.4.1.4.~~))All fire alarm, detection, supervisory, and trouble signals shall be distinctly different and shall be automatically transmitted to a central station service that is listed in the current edition of the Underwriters Laboratories FIRE PROTECTION EQUIPMENT DIRECTORY under the category Central Station (UUFX) as a Full Service Company or as a Fire Alarm Service–Local Company which subcontracts the monitoring, retransmission and associated record keeping and reporting to a listed Full Service Company or Monitoring Company. The listing shall indicate that the Full Service Company or Fire Alarm Service – Local Company provides service to the Seattle area.
Exception: The operations control center may serve as a proprietary supervising station in accordance with NFPA 72 where approved by the authority having jurisdiction.

7.4.1.1* ((~~For systems other than manual systems, the performance of such systems shall include details of the fire signature required to initiate alarm.~~))At least one automatic fire detection system to identify and locate a fire in a tunnel shall be provided.

7.4.1.2 Automatic fire detectors, including fixed water-based fire-fighting system water flow alarm-initiating devices, shall be installed in accordance with the requirements of *NFPA 72*.

7.4.1.3 Automatic fire detectors and fixed water-based fire-fighting system water flow alarm-initiating devices protecting the roadway and ancillary spaces within tunnels (pump stations, utility rooms, cross-passages, ventilation structures) and other areas shall be supervised by automatic fire alarm systems.

7.4.1.4 Spot detectors shall have a light that remains on until the device is reset, or shall be provided with remote alarm or supervisory indication in a location acceptable to the authority having jurisdiction.

7.4.1.5 Automatic fire detection systems for zoned deluge fixed water-based fire-fighting systems within a tunnel shall be zoned to correspond with the fixed water-based fire-fighting system zones.

7.4.1.6 Automatic fire detection systems within a tunnel shall be zoned to correspond with the tunnel ventilation zones if tunnel ventilation is provided.

((~~**7.4.1.2 Manual Fire Alarm Boxes**~~

~~**7.4.1.2.1** Manual fire alarm boxes mounted in NEMA Enclosure Type 4 (IP 65) or equivalent boxes shall be installed at intervals of not more than 90 m (300 ft) and at all cross-passages, and means of egress from the tunnel.~~

~~**7.4.1.2.2** The manual fire alarm boxes shall be accessible to the public and the tunnel personnel.~~

~~**7.4.1.2.3** The location of the manual fire alarm boxes shall be approved.~~

~~**7.4.1.2.4** The alarm shall indicate the location of the manual fire alarm boxes at the monitoring station.~~

~~**7.4.1.2.5** The system shall be installed, inspected, and maintained in compliance with *NFPA 72*.~~

~~**7.4.1.3 Closed-Circuit Television (CCTV) Systems.**~~

~~**7.4.1.3.1** CCTVs with or without traffic-flow indication devices shall be permitted to identify fires in tunnels with 24-hour supervision.~~

~~**7.4.1.3.2*** Ancillary spaces within tunnels (pump stations, utility rooms, cross-passages, ventilation structures) and other areas shall be supervised by automatic fire alarm systems.~~))

((~~***A.7.4.1.3.2** Examples of these areas include the following:~~
~~(1) Pump stations~~
~~(2) Utility rooms~~
~~(3) Cross-passages~~
~~(4) Ventilation structures~~))

((~~**7.4.1.4 Automatic Fire Detection Systems.**~~

~~**7.4.1.4.1** Automatic fire detection installed in accordance with the requirements of *NFPA 72* shall be installed in tunnels where 24-hour supervision is not provided.~~

~~**7.4.1.4.2** Where a fire detection system is installed in accordance with the requirements of 7.4.1.4.1, signals for the purpose of evacuation and relocation of occupants shall not be required.~~

~~**7.4.1.4.3** Where a fire detection system is installed in accordance with the requirements of 7.4.1.4.1, the system shall be for fire detection only.~~

~~**7.4.1.4.4** Automatic fire detection systems shall be capable of identifying the location of the fire within 15 m (50 ft).~~

~~**7.4.1.4.5** Spot detectors shall have a light that remains on until the device is reset~~

~~**7.4.1.4.6** CCTV systems used for automatic fire detection shall be permitted when listed for the intended purpose and installed in accordance with the manufacturers' requirements and *NFPA 72*.~~

~~**7.4.1.4.7** Automatic fire detection systems within a tunnel shall be zoned to correspond with the tunnel ventilation zones where tunnel ventilation is provided.~~))

***

7.4.3 Closed-Circuit Television (CCTV) Systems.

7.4.3.1 CCTVs shall be provided, and shall be capable of identifying the location of the fire within 15 m (50 ft).

7.4.3.2 CCTVs with or without traffic-flow indication devices may automatically identify fires in tunnels if all of the components of the video image fire detection system, including hardware and software, are listed for the purpose of fire detection.

7.4.4 Emergency Telephones.

7.4.4.1 Emergency telephones shall be installed at intervals of not more than 90 m (300 ft) and at all cross-passages, standpipe hose connection locations, and means of egress from the tunnel.

7.4.4.2 The location of the emergency telephones during off-hook condition shall be indicated at the monitoring station.

7.4.5 Emergency Communication System

7.4.5.1 An approved Emergency Communication System in accordance with the 2010 edition of NFPA 72 shall be provided within the tunnel.

7.4.5.2 The Emergency Communication System shall include fire alarm system strobes at all tunnel egress doors.

7.4.6 Fire Command Center. If required by the authority having jurisdiction, road tunnels shall be provided with a fire command center in accordance with Section 509 of the 2009 *Seattle Fire Code*.

7.5((~~*~~)) **Communication Systems.**

((~~**A.7.5** Radio communications systems, such as highway advisory radio (HAR) and AM/FM commercial station overrides, can be provided to give motorists information regarding the nature of the emergency and the actions the motorist should take. All messaging systems should be capable of real-time composition. The communications system can also feature a selection of prerecorded messages for broadcasting by the emergency response authority. Areas of refuge or assembly, if available, should be provided with reliable two-way voice communications to the emergency response authority.~~))

7.5.1 If required by the authority having jurisdiction,((~~In~~)) new and existing tunnels and ancillary structures((~~, wherever necessary for dependable and reliable communications, a separate radio network capable of two-way radio communication for fire department personnel to the fire department communication center~~)) shall be provided with an emergency responder radio system in accordance with Section 510 of the 2009 Seattle Fire Code.

***

7.9.1 Fixed water-based fire-fighting systems ((~~shall be permitted~~))are required in road tunnels as part of an integrated approach to the management of fire and life safety.

7.9.1.1 Fixed water-based fire-fighting systems in road tunnels shall be designed and installed in accordance with NFPA 13.

7.9.1.2 Minimum protection of the roadway shall be in accordance with NFPA 13 for Extra Hazard Group 2. If flammable liquids and/or hazardous materials will be present, protection shall be based on an engineering analysis and approved by the authority having jurisdiction.

7.9.1.3 Protection of electrical rooms and mechanical spaces shall be in accordance with NFPA 13 for Ordinary Hazard Group 1.

7.9.1.4 Protection of exit enclosures shall be in accordance with NFPA 13 for Light Hazard.

***

7.14.3 Maintenance. The means of egress shall be maintained in accordance with ((~~NFPA 1~~)) Chapter 10 of the 2009 *Seattle Fire Code*.

***

7.14.6.3* Egress Pathway.

A.7.14.6.3 The maximum means of egress travel speed shall be computed for reduced visibility due to a smoke filled environment. The travel speed for such environment is in the range of 0.5 – 1.5 m/s (100 – 300 fpm) depending on visibility, illuminance, design of exit signs and egress pathway.

7.14.6.3.1 The tunnel roadway surface, if supported by a traffic management system, shall be considered part of the egress pathway.

7.14.6.3.2 If walkways are provided for egress purposes, the walkway egress path shall have a minimum clear width of 1.12 m (3.6 ft), lead directly to an emergency exit, and be protected from traffic.

7.14.6.4 The emergency exits shall be separated from the tunnel by a minimum of a 2-hour fire-rated construction enclosure having a Class A interior finish as defined in the 2009 *Seattle Building Code*.

7.14.6.5 Emergency exits shall be pressurized in accordance with NFPA 92A, 2009 edition, with doors meeting the requirements of Section 7.14.5.

7.14.6.6 If portals of the tunnel are below surface grade, surface grade shall be accessible by a stair, vehicle ramp, or pedestrian ramp.

7.14.6.7 If cross-passageways are to be used as emergency exits, provisions shall be to stop all traffic operation in the adjacent tunnel when the cross-passageways are in use.

***

Chapter 9 Standpipe, Fire Hydrants, and Water Supply

***

9.1.4.3 ((~~Heat trace material shall be listed for the intended purpose and supervised for power loss.~~))Heat tracing systems for freeze protection for standpipes shall be in accordance with Seattle Fire Department Administrative Rule 9.03.09, *Automatic Sprinkler and Standpipe Systems* and any future revisions of this rule adopted by the authority having jurisdiction.

***

9.2 Standpipe Water Supply

***

9.2.3 ((~~Acceptable water supplies shall include the following:~~
~~(1) Municipal or privately owned waterworks systems that have adequate pressure and flow rate and a level of integrity acceptable to the authority having jurisdiction~~
~~(2) Automatic or manually controlled fire pumps that are connected to an approved water source~~
~~(3) Pressure-type or gravity-type storage tanks that are installed, inspected, and maintained in accordance with NFPA 22~~))
Standpipes shall be sized to provide 1000 gpm. Hydraulic calculations shall be based on 500 gpm at 130 psi at the hydraulically most remote hose connection, with a simultaneous flow of 500 gpm at the next hydraulically most remote hose connection. The maximum calculated pressure at any point in the system shall not exceed 350 psi.

***

9.3.1 Fire department connections shall be of the threaded ((~~two-way or three-way~~))65-mm (2½-in) four-way type((~~ or shall consist of one 100 mm (4 in.) quick-connect coupling that is accessible~~)).

***

9.4 Standpipe Hose Connections

***

9.4.2 ((~~Hose connection spacing shall not exceed more 85 m (275 ft).~~))Dual 65-mm (2½-in) hose connection outlets having separate valves shall be provided at each hose connection location.

***

9.7 Fire Hydrants and Water Supply.

9.7.1 Fire hydrants for limited access and depressed highways shall be provided at spacing not to exceed 1,000 feet to provide for transportation hazards.

9.7.2 Fire hydrants for roadways beneath air-right structures, bridges, and elevated highways shall be provided so that no location on the protected roadway is more than 90 m (300 ft) from a fire hydrant.

9.7.3 Fire hydrants for road tunnels shall be provided so that no location on the protected roadway is more than 45 m (150 ft) from a fire hydrant.

9.7.4 The water supply for fire hydrants shall provide a minimum of 1,000 gpm (63 L/s) at 20 psi (138 kPa) flowing independently, and a minimum of 1,500 gpm (34 L/s) at 20 psi (138 kPa) with two fire hydrants flowing simultaneously.

9.8 Bridges and Elevated Highways.

9.8.1 Fire hydrants for bridges and elevated highways shall be provided in accordance with this section and Section 9.7.

9.8.2 If median dividers and/or four or more traffic lanes are present, fire hydrants for bridges and elevated highways shall be provided on both sides of the roadway at the required spacing or installed in the median divider at the required spacing.

9.8.3 Fire hydrants for bridges and elevated highways shall have two 100 mm (4 in) hose connection outlets, with external threads in accordance with City of Seattle Standard Plan No. 310a, and each outlet provided with a hand-operable valve readily accessible from the roadway.

9.8.4 The hose connection outlets shall be oriented parallel to the roadway and face in both directions of travel.
Exception: The outlets may be angled in towards the roadway at an angle not exceeding 22.5 degrees.

9.8.5 Hose connection outlets shall be positioned such that the centerline of each outlet is installed not more than 400 mm (16 in) horizontally from the inside edge of the top and not less than 200 mm (8 in) above the top of the guardrail or edge barrier, and not more than 1370 mm (54 in) above the roadway.

9.8.6 Hose connection outlets shall be provided with caps that are removable with a standard hydrant wrench.

9.8.7 Hose connection outlet caps shall be provided with a 3 mm (1/8 in) hole and be secured with a short length of chain or cable to prevent falling after removal.

9.8.8 Water shall be supplied to bridge and elevated highway hydrants by the use of approved manually actuated preaction or deluge valves installed in locations not subject to freezing, such as in underground vaults or other *approved* locations.

9.8.9 Access to the preaction or deluge valves and manual actuation capability at the valve locations shall be provided, including access key box if the water supply vault will be locked.

9.8.10 A preaction or deluge valve actuation device (such as an electrical switch, push button, manual pull station, etc,) shall be installed at each hydrant location and be protected from damage in a weatherproof enclosure that can be opened without the use of tools or special knowledge, or with a standard hydrant wrench, or other approved method.

9.8.11 The location of the preaction or deluge valve actuation switch installed at each hydrant shall be readily visible and have approved signage.

9.8.12 A means to indicate that the system is in the tripped condition such as a light beacon or remote monitoring of the system shall be provided.

9.8.13 Hydrant systems for bridges and elevated highways shall have provisions for complete draining after use.

9.8.14 Combination air relief/vacuum valves shall be installed at each high point on the system.

9.8.15 Water supply vault location information, vault access instructions, and a phone number for road crew to drain the system shall be provided at the roadway control panel push button location.

9.8.16 If used, heat tracing systems for freeze protection for hydrant systems shall be in accordance with Seattle Fire Department Administrative Rule 9.03.09, *Automatic Sprinkler and Standpipe Systems* and any future revisions of this rule adopted by the authority having jurisdiction.

9.9 Maintenance and Confidence Testing

9.9.1 Standpipe and hydrant systems shall be inspected and tested at least annually.

9.9.2 Reports of inspections and tests shall be submitted to the Seattle Fire Department Confidence Testing Unit. Maintenance and periodic testing are the owner's responsibility, or the responsibility of such other person as may be designated by the owner, and are separate from fire department inspections.

9.9.3 The person, firm or corporation performing such work shall have a Type STP-1 certificate from the fire department. See Administrative Rules 9.01.09, *Certification for Installing, Maintaining and Testing Life Safety Systems and Equipment* and Administrative Rule 9.02.09, *Confidence Test Requirements for Life Safety Systems*.

9.10 Standpipe Installations in Tunnels Under Construction.

9.10.1 A standpipe system shall be installed in tunnels under construction in accordance with 9.10.1.1 and 9.10.1.2.

9.10.1.1 A standpipe system shall be installed before the tunnel under construction has exceeded a length of 61 m (200 ft) beyond any access shaft or portal and shall be extended as work progresses to within 61 m (200 ft) of the most remote portion of the tunnel.

9.10.1.2 Standpipes shall be sized for approved water flow and pressure at the outlet, based upon the maximum predicted fire load.

***

10.1.1.1 If an engineering analysis is not conducted, or does not support the use of natural ventilation for the configurations described in 10.1.1, a mechanical emergency ventilation system shall be provided.

10.1.1.2 The engineering analysis of the ventilation system shall include a validated subway analytical simulation program augmented as appropriate by a quantitative analysis of airflow dynamics produced in the fire scenario, such as would result from the application of validated computational fluid dynamics (CFD) techniques.

10.1.1.3 The results of the analysis shall include the no-fire (or cold) air velocities that can be measured during commissioning to confirm that a mechanical ventilation system as built meets the requirements determined by the analysis.

***

10.5.1* The design fire size [heat-release rate] shall consider the types of vehicles that are expected to use the tunnel.

Table A.10.5.1 Fire Data for Typical Vehicles

Vehicles	**Peak Fire Heat–Release Rates (MW)**
Passenger car	((~~5–~~))10
Multiple passenger cars (2–4 vehicles)	((~~10–~~))20
Bus	((~~20–~~))30
Heavy goods truck	((~~70–~~))200
Tanker*	((~~200–~~))300

***

11.4* Emergency Power Supply System (EPSS). Road tunnels shall be provided with a Class 2 ((~~I~~)), Type 60, Level 1 ((~~emergency power~~))Emergency Power Supply System (EPSS) in accordance with Article 700 of NFPA 70 and ((~~with~~)) Chapter 4 of NFPA 110.

A.11.4 It is expected that the operations of all systems within the vicinity of a fire can fail. Section 11.4 is intended to limit the area of such failure. The class defines the minimum time, in hours, that the Emergency Power Supply System (EPSS) is designed to operate at its rated load without being refueled or recharged. The type defines the maximum time, in seconds, that the EPSS will permit the load terminals of the transfer switch to be without acceptable electrical power. NFPA 110 recognizes two levels of EPSS equipment installation, performance and maintenance. Level 1 systems shall be installed if failure of the EPSS to perform could result in loss of human life or serious injuries.

11.4.1 The following systems shall be connected to the emergency power supply system:
(1) Emergency voice/alarm communication systems ((~~lighting~~))
(2) Traffic control system(s)
(3) Exit signs and means of egress illumination
(4) ((~~Communication~~)) Lighting for mechanical rooms.
(5) Tunnel drainage system(s)
(6) Ventilation and automatic fire detection equipment for smoke proof enclosures.
(7) Automatic Fire detection systems
(8) Security system(s)
(9) Closed-circuit television or video system(s)
(10) Smoke control systems.
(11) Electrically powered fire pumps.
(12) Power and lighting for the fire command center.
(13) Fire alarm systems.
(14) Elevator car lighting.

***

12.3* Emergency Response Plan.

The emergency response plan shall be submitted for acceptance and approval by the authority having jurisdiction and shall include, as a minimum, the following:

(1) Name of plan and the specific facility(s) the plan covers
(2) Name of responsible agency
(3) Names of responsible individuals
(4) Dates adopted, reviewed, and revised
(5) Policy, purpose, scope, and definitions
(6) Participating agencies, senior officials, and signatures of executives authorized to sign for each agency
(7) Safety during emergency operations
(8) Purpose and operation of operations control center (OCC) and alternative location(s) as applicable
a. Procedure for staffing the backup location(s) shall be specified
b. Procedure to control risk while the OCC does not have staff until the backup facility can take over.
(9) Purpose and operation of command post and auxiliary command post
(10) Communications (e.g., radio, telephone, and messenger service) available at central supervising station and command post; efficient operation of these facilities
(11) Fire detection, fire protection, and fire-extinguishing equipment; access/egress and ventilation facilities available; details of the type, amount, location, and method of ventilation
(12) Procedures for fire emergencies, including a list of the various types of fire emergencies, the agency in command, and the procedures to follow
(13) Maps and plans of the roadway system, including all local streets
(14) Any additional information that the participating agencies want to include

***

12.5.1.1* The OCC may serve as a proprietary supervising station to allow direct receipt of alarms where approved by the authority having jurisdiction.

A.12.5.1.1 Expanding the OCC functions to be a proprietary supervising station will allow faster and more coordinated control and monitoring of the various fire and life safety systems. This will expedite emergency functioning by eliminating delays from a central supervising station company. A proprietary station has significant requirements under NFPA 72 that should be fully understood before adopting this as a policy and practice.

12.5.1.2 For the OCC to be a proprietary supervising station, it shall meet the relevant requirements of NFPA 72.

***

12.8.4 Limited Access Highways and Road Tunnels.

***

13.1* General. This chapter applies to the transportation of hazardous materials through road tunnels as follows:
(1)If the tunnel length equals or exceeds 240 m (800 ft) and if the maximum distance from any point within the tunnel to an area of safety exceeds 120 m (400 ft).
(2)If tunnel length equals or exceeds 300 m (1000 ft).
Exceptions:
(1) The existing Mount Baker Tunnel (Interstate-90) and the Washington State Convention and Trade Center lid (Interstate-5) if the foam-water fire protection system(s) are fully functional and in-service.
(2) Fuel contained in the fuel system of the transporting vehicle, or in the fuel systems of vehicles and equipment being towed or carried.

A.13.1 Hazardous Material. A substance or material, including a hazardous substance, that has been determined by the Secretary of Transportation for the United States Department of Transportation (U.S.D.O.T.) to be capable of posing an unreasonable risk to health, safety and property when transported in commerce and which has been so designated.

13.1.1((* ~~The authority having jurisdiction shall adopt rules and regulations that apply to the transportation of regulated and unregulated cargoes.~~))Flames used for heating vehicles or loads shall be extinguished before the vehicle enters the road tunnel or its approaches.

13.1.2 *((~~Design and planning of the facility shall address the potential risk presented by regulated and unregulated cargoes as permitted by 13.1.1.~~))Vehicles transporting hazardous materials in quantities that require DOT placards in accordance with 49 CFR are prohibited in road tunnels.

TABLE A.13.1.2

The following classes of hazardous materials are defined in the United States Department of Transportation Regulations, 49 CFR 173, which is incorporated by reference:			
Name of Class or Division	Class Number	Division Number (if any)	49 CFR Reference for Definitions
Explosives (with a mass explosion hazard)	1	1.1	173.50
Explosives (with a projection hazard)	1	1.2	173.50
Explosives (with predominantly a fire	1	1.3	173.50

hazard)			
Explosives (with no significant blast hazard)	1	1.4	173.50
Very insensitive explosives; blasting agents	1	1.5	173.50
Extremely insensitive detonating substances	1	1.6	173.50
Flammable gas	2	2.1	173.115
Nonflammable compressed gas	2	2.2	173.115
Poisonous gas	2	2.3	173.115
Flammable and combustible liquid	3	---	173.120
Flammable solid	4	4.1	173.124
Spontaneously combustible materials	4	4.2	173.124
Dangerous when wet material	4	4.3	173.124
Oxidizers	5	5.1	173.127
Organic peroxides	5	5.2	173.128
Poisonous materials	6	6.1	173.132
Infectious substances (Etiological agents)	6	6.2	173.134
Radioactive materials	7	---	173.403
Corrosive materials	8	---	173.136
Miscellaneous hazardous materials	9	---	173.140
Other regulated materials: ORM-D	None	---	173.144

***

13.1.4 Tank vehicles that are empty, or that have a residue, or vehicles transporting empty containers are prohibited from entering road tunnels if they previously transported the following hazardous materials:
(1) Class 1 explosives, division 1.1, 1.2, and 1.3;
(2) Class 2, division 2.3 poisonous gas;
(3) Class 4, division 4.3 dangerous when wet materials;
(4) Class 6, division 6.1 poisonous materials marked PG I (Inhalation Hazard), or PG III (Stow Away From Foodstuffs)
Exceptions:

1. Tank vehicles or containers that have been sufficiently cleaned of residue and purged of vapor to remove any potential hazard;
2. Tank vehicles or containers that have been reloaded with a material not classified as a hazardous material;

13.1.5 Alternative-fuel vehicles powered by liquefied petroleum gas (LPG), liquefied natural gas (LNG) or compressed natural gas (CNG) are permitted if the:
(1) Vehicle has a dedicated alternative-fuel system installed by the manufacturer of the vehicle.
(2) Vehicle has a fuel system that has been properly converted to an alternative fuel system.
(3) Vehicle alternative-fuel system conforms to applicable industry standards, including:
(a) NFPA 52 - Standard for Compressed Natural Gas (CNG) Vehicular Fuel Systems, which is incorporated by reference; or
(b) NFPA 58 - Standard for the Storage and Handling of Liquefied Petroleum Gases (LPG), which is incorporated by reference.
(4) Vehicle alternative-fuel system conforms to applicable federal regulations.
(5) Fuel capacity of the vehicle does not exceed 300 pounds water capacity.

13.1.5.1 Alternative-fuel vehicles shall display all markings and symbols required by law to identify the alternative-fuel system.

***

Section 42. Sections 2 through 426 of Ordinance 122491 are hereby repealed.

Section 43. Severability. The provisions of this ordinance are declared to be separate and severable. The invalidity of any clause, sentence, paragraph, subdivision, section or portion of this ordinance, or the invalidity of its application to any person or circumstance, shall not affect the validity of the remainder of this ordinance, or the validity of its application to other persons or circumstances.

Section 44. This ordinance shall take effect and be in force 30 days from and after its approval by the Mayor, but if not approved and returned by the Mayor within ten days after presentation, it shall take effect as provided by Seattle Municipal Code Section 1.04.020.

Passed by the City Council the ____ day of _____, 2010, and signed by me in open session in authentication of its passage this _____ day of _____, 2010.

_____
President _____of the City Council

Approved by me this ____ day of _____, 2010.

_____
Michael McGinn, Mayor

Filed by me this ____ day of _____, 2010.

_____
City Clerk

(Seal)