REVIEW DRAFT
VOLUME 2 –
CONSTRUCTION STORMWATER CONTROL

City of Seattle
Seattle Public Utilities
Department of Planning and Development

March 2014

Note:
Some pages in this document have been purposely skipped or blank pages inserted so that this document will copy correctly when duplexed.

Table of Contents

CHAPTER 1 – Introduction 1-1

1.1. What is the Purpose of this Volume? 1-1
1.2. How Does this Volume Apply to Construction? 1-1
1.2.1. City of Seattle Requirements 1-1
1.2.2. How to Use This Volume 1-2
1.3. What is Considered "Compliance"? 1-2
1.3.1. Surface Water Quality 1-2
1.3.2. Groundwater Quality 1-3
1.3.3. Downstream Infrastructure and Resources 1-3
1.4. What is Considered "Out of Compliance"? 1-4
1.5. Purpose of Construction Stormwater Best Management Practices (BMPs) 1-4

CHAPTER 2 – The Submittal Process 2-1

2.1. Construction Stormwater Control Plan 2-1
2.1.1. Small Projects 2-2
2.1.2. Large Projects 2-3

CHAPTER 3 – Selection Process for Construction Stormwater Controls 3-1

CHAPTER 4 – Standards and Specifications for Construction Erosion and Sedimentation Control (Source Control) 4-1

4.1. Cover Practices 4-2
4.1.1. Temporary Cover Practices 4-2
4.1.2. BMP E1.10: Temporary Seeding 4-3
4.1.3. BMP E1.15: Mulching, Matting, and Compost Blankets 4-6
4.1.4. BMP E1.20: Clear Plastic Covering 4-11
4.1.5. Permanent Cover Practices 4-13
4.1.6. BMP E1.30: Preserving Natural Vegetation 4-14
4.1.7. BMP E1.35: Buffer Zones 4-17
4.1.8. BMP E1.40: Permanent Seeding and Planting 4-19
4.1.9. BMP E1.45: Sodding 4-23
4.2. Erosion Control Practices 4-25
4.2.1. Temporary Erosion Control BMPs 4-25
4.2.2. BMP E2.10: Stabilized Construction Entrance 4-27
4.2.3. BMP E2.15: Tire Wash 4-31
4.2.4. BMP E2.20: Construction Road Stabilization 4-33
4.2.5. BMP E2.35: Check Dams 4-35
4.2.6. BMP E2.40: Triangular Silt Dike (Geotextile-Encased Check Dam) 4-38
4.2.7. BMP E2.45: Dust Control 4-40
4.2.8. Permanent Erosion Control BMPs 4-42
4.2.9. Temporary or Permanent Erosion Control BMPs 4-43
4.2.10. BMP E2.70: Subsurface Drains 4-44
4.2.11. BMP E2.80: Earth Dike and Drainage Swale 4-47
4.2.12. BMP E2.95 Turbidity Curtain 4-50
4.3. Sediment Control Practices 4-52
4.3.1. BMP E3.10: Filter Fence 4-53

4.3.2. BMP E3.20: Gravel Filter Berm 4-58
4.3.3. BMP E3.25: Storm Drain Inlet Protection 4-59
4.3.4. BMP E3.30: Vegetated Strip 4-64
4.3.5. BMP E3.35: Straw Wattles, Compost Socks, and Compost Berms 4-66
4.3.6. BMP E3.40: Sediment Trap 4-70
4.3.7. BMP E3.50: Portable Sediment Tank 4-73
4.3.8. BMP E3.60: Construction Stormwater Filtration 4-75
4.3.9. BMP E3.65: Cleaning Inlets and Catch Basins 4-77
4.3.10. BMP E3.70: Street Sweeping and Vacuuming 4-79

CHAPTER 5 – Standards and Specifications for Construction Pollutants Other than Sediment 5-1

5.1. Source Control Practices 5-1
5.1.1. BMP C1.10: Certified Erosion and Sediment Control Lead 5-3
5.1.2. BMP C1.15: Material Delivery, Storage, and Containment 5-8
5.1.3. BMP C1.20: Use of Chemicals During Construction 5-11
5.1.4. BMP C1.25: Demolition of Buildings 5-13
5.1.5. BMP C1.30: Building Repair, Remodeling, and Construction 5-14
5.1.6. BMP C1.35: Sawcutting and Paving Pollution Prevention 5-15
5.1.7. BMP C1.40: Temporary Dewatering 5-17
5.1.8. BMP C1.45: Solid Waste Handling and Disposal 5-22
5.1.9. BMP C1.50: Disposal of Asbestos and Polychlorinatedbiphenols (PCBs) 5-24
5.1.10. BMP C1.55: Airborne Debris Curtain 5-25
5.1.11. BMP C1.56: Concrete Handling and Disposal 5-27
5.1.12. BMP C1.59: High pH Neutralization Using CO_2 5-35

CHAPTER 6 – References 6-1

Tables

Table 1a. Checklist to Select Small Project Construction BMPs.... 3-2

Table 1b. Checklist to Select Large Project Construction BMPs. 3-8

Table 2. Seeding Mixture. [a] 4-5

Table 3. Guide to Mulch Materials, Rates and Uses. 4-7

Table 4. Erosion Seeding Mixture. 4-21

Table 5. Geotextile Standards. 4-29

Table 6. Design Criteria for Earth Dike. 4-49

Table 7. Design Criteria for Drainage Swale. 4-49

Table 8. Geotextile Standards. 4-55

Table 9. Vegetated Strip Implementation Criteria. 4-64

Figures

Figure 1. Hydroseeding Method. 4-3
Figure 2a. Mat Installation on Slope. 4-9
Figure 2b. Mat Installation on a Channel. 4-10
Figure 3. Stockpile Covered with Plastic Sheeting. 4-11
Figure 4. Preserving Vegetation. 4-14
Figure 5. Vegetated Buffer Zone. 4-17
Figure 6. Stabilized Construction Entrance. 4-27
Figure 7. Stabilized Construction Entrance. 4-28
Figure 8. Tire Wash Details. 4-32
Figure 9. Check Dams. 4-36
Figure 10. Triangular Silt Dike Cut Section. 4-38
Figure 11. Using a Water Truck for Dust Control. 4-40
Figure 12. Earth Dike and Drainage Swale. 4-47
Figure 13. Filter Fence Installed on a Slope. 4-53
Figure 14. Silt Fence Details. 4-56
Figure 15. Block and Gravel Curb Inlet Protection. 4-60
Figure 16. Curb and Gutter Barrier. 4-61
Figure 17. Straw Wattles or Compost Sock for Inlet Protection. 4-66
Figure 18. Straw Wattle Details. 4-68
Figure 19. Cross Section of Sediment Trap and Outlet. 4-72
Figure 20a. Concrete Washout Area. 5-31
Figure 20b. Concrete Washout Area. 5-32
Figure 20c. Prefabricated Concrete Washout Container with Ramp. 5-32

CHAPTER 1 – INTRODUCTION

1.1. What is the Purpose of this Volume?

This volume is designed to help businesses, individuals, responsible parties, and public agencies in Seattle implement best management practices (BMPs) at construction sites to:

- Prevent impacts to the public drainage system and downstream resources
- Stop pollutants from contaminating stormwater

Uncontrolled stormwater can threaten downstream resources, such as public storm drains, real property, and natural habitat. It can also pollute our public drainage system and receiving waters (e.g., creeks, streams, rivers, lakes, and Puget Sound). The resulting impacts can pose serious risks to the health, safety, and welfare of humans and the environment.

1.2. How Does this Volume Apply to Construction?

This volume applies to all construction projects in Seattle, defined in the Seattle Municipal Code (SMC), Chapter 22.801.170 as the addition or replacement of impervious surface or the undertaking of land disturbing activity.

The construction stormwater BMPs and requirements in this volume have been integrated from many programs and regulations, including the provisions of the:

- Federal Clean Water Act
- Federal Coastal Zone Management Act
- City of Seattle Phase I NPDES Municipal Stormwater Permit
- Puget Sound Partnership Action Agenda
- Washington State Department of Ecology (Ecology) Construction Stormwater General Permit
- City of Seattle Stormwater Code

1.2.1. City of Seattle Requirements

Under current City law, the responsible party is liable for water quality problems and impacts to downstream resources caused by construction work. Many construction projects with land disturbance require a permit from Department of Planning and Development (DPD) and most projects that occur in the street right-of-way require a permit from Seattle Department of Transportation (SDOT). Regardless of whether or not a permit is required, all construction stormwater must be controlled to prevent negative impacts.

If you are planning a construction project and need information concerning the applicable stormwater requirements, the first step is reviewing Volume 1 – Project Minimum

Requirements and the applicable elements of the Stormwater Code. Code sections to refer to include, but are not limited to, SMC 22.805.020 (particularly subsection D), SMC 22.807.020 (for requirements related to drainage control review), and the definitions in SMC 22.801.

1.2.2. How to Use This Volume

- *Chapter 1* (this chapter) outlines the purpose and content of this volume.
- *Chapter 2* provides information to determine project categories, along with the required submittal process and documentation.
- *Chapter 3* provides an explanation for BMP selection based on project category and a checklist that must be reviewed to select the required and appropriate BMPs for your project.
- *Chapters 4* and *5* provide the standards and specifications for the BMPs contained in this volume.

Several appendices also support the information contained in this volume. These appendices include:

- *Appendix A* – Definitions
- *Appendix B* – Background Information on Chemical Treatment
- *Appendix E* – Additional Design Requirements
- Appendix F – Hydrologic Analysis and Design

1.3. What is Considered "Compliance"?

The City expects that the selection and implementation of appropriate BMPs outlined in this volume, and other applicable manuals, will result in compliance with the Stormwater Code's minimum requirements for construction site stormwater pollution prevention control. If compliance is not achieved, additional measures must be implemented.

Proper implementation and maintenance of appropriate BMPs is critical to control any adverse water quality or downstream resource impacts from construction activity.

1.3.1. Surface Water Quality

Pollutants that might be expected in the discharge from construction sites include, but are not limited to, sedimentation (as measured by turbidity), pH, and petroleum products. The public drainage system and/or receiving waters can be contaminated by direct discharges of these pollutants, or from stormwater discharges that have become contaminated by direct contact with the pollutants or pollutants absorbed into sediment.

Soil erosion, sheet erosion, or downstream channel erosion can cause turbid (muddy) stormwater when the sediment contacts rainwater; this is the most common and visible form of construction stormwater pollution. The resulting high turbidity can adversely impact receiving waters if not properly controlled using the BMPs contained in this volume.

The sources of other commonly encountered pollutants include materials and chemicals used during day-to-day construction activities, such as concrete pouring, paving, truck and heavy equipment operation, and maintenance activities. Low and high acidity and petroleum products can adversely impact the public drainage system and/or receiving waters in more than one way. One direct impact is reduced water quality by introducing pollutants; another impact is decreased function of the public drainage system by fouling and spreading pollutants in the pipe network.

Ecology's Water Quality Standards for Surface Waters of the State of Washington are provided in the Washington Administrative Code (WAC) Chapter 173-201A. Contractors and other responsible parties must be familiar with the current water quality standards, particularly those targeting typical construction-related pollutants. For more information on surface water quality standards and specific criteria, contact Ecology at (425) 649-7000 or visit Ecology's website (http://www.ecy.wa.gov/programs/wq/swqs/new-rule.html).

It is illegal to discharge dirty water to the drainage system; however, the activity may be permitted for disposal in the sanitary sewer if approved by King County. For more information regarding discharge to the sanitary sewer, contact the King County Industrial Waste Program at (206) 263-3000. If the discharge is approved, a permit will be issued for the activity.

If sanitary sewer disposal is not available or not allowed, the contaminated water must be treated or transferred to a holding tank, where it must be picked up for off-site disposal.

1.3.2. Groundwater Quality

The Ecology groundwater quality standards are created for protection of groundwater from contamination. The primary water quality consideration for stormwater discharges to groundwater from construction sites is the control of contaminants other than sedimentation.

For more information on groundwater quality standards, contact Ecology at (425) 649-7000 or visit Ecology's website (http://www.ecy.wa.gov/programs/wq/grndwtr/index.html).

1.3.3. Downstream Infrastructure and Resources

The public drainage system or public combined sewer, real property, and natural habitat can be adversely impacted when an uncontrolled discharge leaves a construction site. Common negative impacts can include soil erosion, flooding, habitat degradation, and/or subsequent destructive after-effects due to increases in the stormwater volume, velocity, and peak flow rate.

The Stormwater Code and this volume may require construction of temporary stormwater retention, detention, or infiltration facilities to protect downstream resources. It is important to note that these facilities must be functioning prior to implementation of land disturbing activity. If a permanent facility is used to control flows during construction, refer to *Volume 3* for design guidelines and criteria. *Volume 3* also provides design criteria to protect permanent infiltration facilities from siltation during the construction phase of the project.

Additional impacts to downstream infrastructure and resources can occur from dewatering activities as well. Projects which are required to comply with the Minimum Requirements for

Flow Control must include the dewatering discharge volume as part of the total release rate allowed from the site.

1.4. What is Considered "Out of Compliance"?

The Stormwater Code outlines compliance requirements for construction stormwater pollution prevention. If the required BMPs being implemented do not effectively address erosion issues or the discharge of pollutants, additional BMPs may be required.

Violations are enforceable under the City's Stormwater Code SMC 22.808.030 and *Volume 5* (Enforcement) of this manual.

Examples of when a project would be considered out of compliance with the Stormwater Code include:

- A discharge leaves the project site that causes or contributes to a prohibited discharge, or a known or likely violation of water quality standards in the receiving water, or violates the Phase I NPDES Municipal Stormwater General Permit (SMC, Chapter 22.805.010).
- A project that has not received all required permits and discharges to the public drainage system or public combined sewer.
- A discharge of oil or other deleterious substances leaves the project site and enters the public combined sewer, public drainage system, or a receiving water.
- Sediment is tracked off the project site.
- A permitted site does not have a Construction Stormwater Control Plan.

This is not a comprehensive list of out of compliance events. If there is a question about compliance, visit the DPD Applicant Services Center on the 20th floor of the Seattle Municipal Tower, 700 Fifth Avenue, Seattle, Washington 98124, or the website (http://www.seattle.gov/dpd/).

1.5. Purpose of Construction Stormwater Best Management Practices (BMPs)

Construction stormwater BMPs are measures implemented to protect the public drainage system, sewer system, and receiving waters from pollution and impacts to downstream resources during land-disturbing and other construction activities (refer to SMC, Chapter 22.801.030). For example:

- Construction activities such as clearing, grading, excavation, and stockpiling disturb established vegetation, trees, and stable soils.
- Concrete, asphalt, treated timber, and other construction materials involve chemicals and contaminants that must be retained on the project site.

- Construction activities can increase the volume and/or peak flow rate of discharges leaving the site. The discharges can increase sediment, erosion and pollution in receiving waters.
- Construction equipment introduces the potential for spills involving oil, gasoline, or other petroleum products.

In general, construction BMPs help to prevent pollution from leaving the project site, eliminate ponding and/or flooding in the public right-of-way, and minimize impacts to the public drainage system. These measures fall into two general categories – erosion and sedimentation control and control of pollutants other than sediment.

Erosion and sediment control BMPs can be grouped according to three methods of controlling erosion and sediment:

- Cover practices – temporary or permanent cover designed to stabilize disturbed areas.
- Erosion control practices – physical measures designed and constructed to prevent erosion of project site soils.
- Sediment control practices – prevent eroded soils from leaving the project site by trapping them in a depression, filter, or other barrier.

Pollutants other than sediment are primarily controlled using good "housekeeping" practices and other methods outlined in this volume to reduce the risk of pollutant contact with stormwater or direct discharge to receiving waters.

Refer to *Volume 4 - Source Control*. This volume should be reviewed to ensure that all Director's Rules requirements are being met for each construction project.

CHAPTER 2 – THE SUBMITTAL PROCESS

2.1. Construction Stormwater Control Plan

The Construction Stormwater Control Plan applies BMPs that fall within the 19 elements of water quality and downstream resource protection and are required by the Stormwater Code (SMC, Chapter 22.805.020.D). These elements cover general water quality protection strategies, including:

- Limiting project site impacts
- Protecting the public drainage system, sanitary sewer, and downstream receiving waters
- Preventing erosion and sedimentation
- Managing activities and sources

The 19 elements are listed below:

1. Mark Clearing Limits and Critical Areas
2. Retain Top Layer
3. Establish Construction Access
4. Protect Downstream Properties and Receiving Waters
5. Prevent Erosion and Sediment Transport from the Site
6. Prevent Erosion and Sediment Transport from the Site by Vehicles
7. Stabilize Soils
8. Protect Slopes
9. Protect Storm Drains
10. Stabilize Channels and Outlets
11. Control Pollutants
12. Control Dewatering
13. Maintain BMPs
14. Inspect BMPs
15. Execute Construction Stormwater Control Plan

16. Minimize Open Trenches

17. Phase the Project

18. Install permanent flow control and water quality facilities

19. Protect Green Stormwater Infrastructure BMPs

Project designers must review the applicable elements of SMC 22.805.020.D and ensure the specific requirements under each of the 19 elements in the code are fully addressed by the project's construction site stormwater pollution prevention controls.

2.1.1. Small Projects

For Small Projects (i.e., 5,000 square feet or less of new plus replaced impervious surface, and 1 acre or less of land disturbing activity), the applicant must submit a Construction Stormwater Control Plan and Post Construction Soil Management Plan that demonstrates how the project will cover the 19 elements listed above by using BMPs contained in this volume.

The first step after reviewing the Stormwater Code requirements is to refer to *Chapter 3*, Table 1a. Checklist to Select Small Project Construction BMPs. Small Projects are required to implement BMPs from all 19 elements as dictated by site conditions. If a required element is not applicable, the reason must be justified briefly on the checklist and in detail in the plan narrative, described below.

The next step is to prepare the Small Project Construction Stormwater Control Plan narrative section that describes the project and selected BMPs.

The narrative and subsequently prepared plan, must include:

- The name, address, and phone number of the owner or contact person
- A north arrow, lot number and plat, address, date, and street name fronting structure
- A description of all existing and proposed structures on the project site
- The location and size all streams, swales, and drainage channels on or within 25 feet of the project site that may be impacted by or affect the drainage of the project site to be developed
- A description of all existing stormwater pipes and their diameters and approximate lengths
- The direction and location of stormwater runoff entering and exiting the project site from all adjacent properties (this may be done with topographic contour lines)
- 'Point of discharge' labels for all discharges of stormwater, wastewater, etc. that leave the site
- The types of systems, including green stormwater infrastructure (GSI) BMPs, that will be used to convey runoff away from the proposed structures, if applicable

- The steps that will be taken to retain native vegetation and minimize impervious surfaces to the extent feasible
- The types of wastewater that may be generated during the work and the types of collection or conveyance systems used to manage the waste, including disposal options
- Location(s) where stormwater discharges or is collected from the project site, including individual (point) flow, sheet flow (i.e., overland flow)
- A description of how construction will be phased so that only those areas actively being worked are uncovered
- The construction entrance(s) and egress, as applicable
- Stockpile and excavation locations

Once the narrative has been completed, the plan sheet (i.e., engineering drawing) should be completed. The plan sheet is not required to be prepared by a civil engineer; however, it is required to graphically show the information provided in the narrative, including how BMPs will be implemented.

To assist in meeting the plan sheet requirement, DPD offers a prescriptive plan sheet, which contains illustrations of some of the most effective BMPs required for Small Projects. It is called "The Construction Stormwater Control and Soil Amendment Plan (CSC/SA Plan) and provides a quick way for the applicant to document erosion control methods, integrate stormwater controls with building plans, and provides a clear field guide for both the applicant and the City. Refer to *Chapters 4 and 5* for details on how to implement the BMPs during construction.

The CSC/SA Plan can be obtained from the DPD Public Resources Center on the 20th floor of the Seattle Municipal Tower, 700 Fifth Avenue, Seattle, Washington 98124, or the website, which has both pdf and CAD formats (http://www.seattle.gov/dpd/codesrules/codes/stormwater/default.htm).

The applicant is responsible for modifying the Construction Stormwater Control Plan whenever directed to by the Inspector, or when there is a change in design, construction, operation, or maintenance at the construction site that has, or could have, a significant effect on the discharge of pollutants.

2.1.2. Large Projects

For Large Projects (i.e., over 5,000 square feet of new plus replaced impervious surface, or more than 1 acre of land disturbing activity), the applicant must submit a Large Project Construction Stormwater Control Plan, including narrative and plan sheet(s), that demonstrate how the project will cover the 19 elements by using BMPs contained in this volume.

The first step is to refer to *Chapter 3*, Table 1b. Checklist to Select Large Project Construction BMPs. Large Projects are required to implement BMPs from all 19 elements. If a required element is not applicable, the reason must be justified briefly on the checklist and

in detail in the plan narrative. The next step is to prepare the Large Project Construction Stormwater Control Plan narrative section and plan sheets that describe the project and selected BMPs. The Large Project Construction Stormwater Control Plan includes the same narrative and plan details required for the Small Project Construction Stormwater Control Plans (*Section 2.1.1*) plus additional narrative and plan sheet(s), as applicable.

The Large Project Construction Stormwater Control Plan must be prepared by a qualified professional. When the plan includes engineering calculations, it must be stamped and signed by an engineer licensed in the State of Washington.

The applicant is responsible for modifying the Construction Stormwater Control Plan whenever there is a change in design, construction, operation, or maintenance at the construction site that has, or could have, a significant effect on the discharge of pollutants, or when directed to by the Inspector.

CHAPTER 3 – SELECTION PROCESS FOR CONSTRUCTION STORMWATER CONTROLS

Small and Large Projects must implement BMPs for the 19 elements of general water quality and downstream resource protection strategies listed in *Section 2.1*. Refer to *Section 2.1* for a discussion of Small and Large Project Construction Stormwater Control Plans, including the level of detail required for submittals.

Tables 1a and 1b present each of the 19 elements and required or recommended BMPs for Small and Large Project plans, respectively. Required BMPs must be implemented throughout construction. If a required element is not applicable, the reason must be justified briefly on the checklist and in detail in the plan narrative. The recommended BMPs are intended to provide further guidance for minimizing potential stormwater pollution resulting from activities. Using these additional BMPs is encouraged.

Refer to Table 1a or 1b and/or the Pre-Application Report (PAR) prepared by the City to identify the appropriate required and recommended BMPs for your project. The Small Project Construction Stormwater Control Plan and the Large Project Construction Stormwater Control plan should document each selected BMP and its implementation, maintenance, and inspection requirements.

***Note**: The City may require additional measures beyond what are shown on the approved plan depending on Stormwater Code requirements, construction sequencing, and actual site conditions.*

Table 1a. Checklist to Select Small Project Construction BMPs.

Element	Element	Project Name: _____	
		Small Project [a] (check selection)	**If not applicable, describe why in the space below.**
1	Mark Clearing Limits and Critical Areas	Recommended [b] BMPs: ☐ E1.30 Preserving Natural Vegetation (refer to *Section 4.1.6)* ☐ E1.35 Buffer Zones (refer to *Section 4.1.7*)	
2	Retain Top Layer	Required BMP: Within the boundaries of the project site, retain the duff layer, top soil, and native vegetation, if there is any, in an undisturbed state to the maximum extent feasible. If it is not feasible to retain the top layer in place, stockpile on site, cover to prevent erosion, and replace immediately upon completion of ground disturbing activities to the maximum extent feasible.	
3	Establish Construction Access	Required BMP: ☐ E2.10 Stabilization Construction Entrance (refer to *Section 4.2.2*) Recommended BMPs: ☐ E2.15 Tire Wash (refer to *Section 4.2.3*) ☐ E2.20 Construction Road Stabilization (refer to *Section 4.2.4*)	
4	Protect Downstream Properties and Receiving Waters	Recommended BMP: ☐ DOE BMP C241 Temporary Sediment Pond (or Basin)	
5	Prevent Erosion and Sediment Transport from the Site	Required BMPs – one or more of the following: ☐ E2.95 Turbidity Curtain (refer to *Section 4.2.12*) ☐ E3.10 Filter Fence (refer to *Section 4.3.1*) ☐ E3.20 Gravel Filter Berm (refer to *Section 4.3.2*) ☐ E3.30 Vegetated Strip (refer to *Section 4.3.4*) ☐ E3.35 Straw Wattles (refer to *Section 4.3.5*) ☐ E3.40 Sediment Trap (refer to *Section 4.3.6*) ☐ E3.50 Portable Sediment Tank (refer to *Section 4.3.7*) ☐ E3.60 Construction Stormwater Filtration (refer to *Section 4.3.8*) ☐ DOE BMP C231 Brush Barrier ☐ DOE BMP C241 Temporary Sediment Pond (or Basin) ☐ DOE BMP C250 Construction Stormwater Chemical Treatment	

Table 1a (continued). Checklist to Select Small Project Construction BMPs.

Element	Element	Project Name: _____ Small Project [a] (check selection)	If not applicable, describe why in the space below.
6	Prevent Erosion and Sediment Transport From the Site by Vehicles	Required BMPs – one or more of the following: ☐ E3.65 Cleaning Inlets and Catch Basins (refer to *Section 4.3.9*) ☐ E3.70 Street Sweeping and Vacuuming (refer to *Section 4.3.10*)	
7	Stabilize Soils	Required BMPs for all exposed soils and stockpiles – one or more of the following: ☐ E1.10 Temporary Seeding (refer to *Section 4.1.2*) ☐ E1.15 Mulching, Matting, and Compost Blankets (refer to *Section 4.1.3*) ☐ E1.20 Clear Plastic Covering (refer to *Section 4.1.4*) ☐ E1.40 Permanent Seeding and Planting (refer to *Section 4.1.8*) ☐ E1.45 Sodding (refer to *Section 4.1.9*) ☐ E2.45 Dust Control (refer to *Section 4.2.7*) ☐ DOE BMP C126 Polyacrylamide for Soil Erosion Protection ☐ DOE BMP C130 Surface Roughening ☐ DOE BMP C131 Gradient Terracing	
8	Protect Slopes (refer to the Environmentally Critical Areas ordinance [SMC 25.09.180] for additional requirements and development standards for steep slopes)	Required BMPs – one or more of the following: ☐ Level Spreader (refer to *Appendix E*) ☐ E2.35 Check Dams (refer to *Section 4.2.5*) ☐ E2.40 Triangular Silt Dike (Geotextile-Encased Check Dam) (refer to *Section 4.2.6*) ☐ Pipe Slope Drains (refer to *Appendix E*) ☐ E2.70 Subsurface Drains (refer to *Section 4.2.10*) ☐ E2.80 Earth Dike and Drainage Swale (refer to *Section 4.2.11*) ☐ DOE BMP C201 Grass-Lined Channels ☐ DOE BMP C130 Surface Roughening ☐ DOE BMP C131 Gradient Terracing	

Table 1a (continued). Checklist to Select Small Project Construction BMPs.

Element	Element	Project Name: _____	
		Small Project [a] (check selection)	**If not applicable, describe why in the space below.**
9	Protect Storm Drains	Required BMPs: ☐ E3.25 Storm Drain Inlet Protection (refer to *Section 4.3.3*) ☐ E3.65 Cleaning Inlets and Catch Basins (refer to *Section 4.3.9*) ☐ E3.25 Street Sweeping and Vacuuming (refer to *Section 4.3.10*)	
10	Stabilize Channels and Outlets	Recommended BMPs: ☐ Level Spreader (refer to *Appendix E*) ☐ E2.35 Check Dams (refer to *Section 4.2.5*) ☐ E2.80 Earth Dike and Swale (refer to *Section 4.2.11*) ☐ Outlet Protection (refer to *Appendix E*) ☐ DOE BMP C201 Grass-Lined Channels ☐ DOE BMP C202 Channel Lining ☐ DOE BMP C203 Water Bars	
11	Control Pollutants (also refer to Volume 4 - Source Control)	Required BMPs: ☐ C1.15 Material Delivery, Storage and Containment (refer to *Section 5.1.2*) ☐ C1.20 Use of Chemicals During Construction (refer to *Section 5.1.3*) ☐ C1.25 Demolition of Buildings (refer to *Section 5.1.4*) ☐ C1.30 Building Repair, Remodeling, and Construction (refer to *Section 5.1.5*) ☐ C1.35 Sawcutting and Surfacing Pollution Prevention (refer to *Section 5.1.6*) ☐ C1.45 Solid Waste Handling and Disposal (refer to *Section 5.1.8*) ☐ C1.50 Disposal of Asbestos and Polychlorinatedbiphenols (PCBs) (refer to *Section 5.1.9*) ☐ C1.55 Airborne Debris Curtain (refer to *Section 5.1.10*) ☐ C1.56 Concrete Handling and Disposal (refer to *Section 5.1.11*)	
12	Control Dewatering	Recommended BMP: ☐ C1.40 Temporary Dewatering (refer to *Section 5.1.7*)	

Table 1a (continued). Checklist to Select Small Project Construction BMPs.

Element	Element	Project Name: _____	
		Small Project [a] (check selection)	**If not applicable, describe why in the space below.**
13	Maintain BMPs	Required BMP: ☐ Maintain and repair all temporary and permanent erosion and sediment control BMPs as needed to assure continued performance of their intended function	
14	Inspect BMPs	Required BMP: ☐ Inspect, maintain and repair all BMPs as needed to assure continued performance of their intended function	
15	Execute Construction Stormwater Control Plan	Required BMPs: Implement and maintain an updated Construction Stormwater Control Plan beginning with initial land disturbance. ☐ Retain the Small Project Construction Stormwater Control Plan on site or within reasonable access to the site. Modify the plan as needed. Coordination with Utilities, Contractors, and Others ☐ The primary project proponent shall evaluate, with input from utilities and other contractors, the stormwater management requirements for the entire project, including the utilities, when preparing the Small Project Construction Stormwater Control Plan. Project Close-out ☐ Remove all temporary erosion and sediment control BMPs within 5 business days after final site stabilization is achieved, or after they are no longer needed, whichever is later.	
16	Minimize Open Trenches	Required BMP: In the construction of underground utility lines, where feasible, no more than one hundred fifty (150) feet of trench shall be opened at one time, unless soil is replaced within the same working day. Where consistent with safety and space considerations, place excavated material on the uphill side of trenches. Trench dewatering devices shall discharge into a sediment trap or sediment pond.	

Table 1a (continued). Checklist to Select Small Project Construction BMPs.

Element	Element	Project Name: _____ Small Project [a] (check selection)	If not applicable, describe why in the space below.
17	Phase the Project	Required BMPs: Construction Phasing ☐ Phase development projects where feasible in order to prevent soil erosion and, to the maximum extent practicable, the transport of sediment from the site during construction. Seasonal Work Limitations ☐ From October 1 through April 30, clearing, grading, and other soil disturbing activities will be subject to additional limitations.	
18	Install permanent flow control and water quality facilities	Refer to *Volume 1* for applicable minimum requirements and *Volume 3* for BMP design.	
19	Protect Green Stormwater Infrastructure BMPs	☐ Protect all Green Stormwater Infrastructure (GSI) BMPs from sedimentation through installation and maintenance of erosion and sediment control BMPs. Restore the BMPs to their fully functioning condition if they accumulate sediment during construction. Restoring the GSI BMP must include removal of sediment and any sediment-laden soils, and replacing the removed soils with soils meeting the design specification. ☐ Prevent compaction of GSI BMPs by excluding construction equipment and foot traffic. Protect established lawn and landscaped areas from compaction due to construction equipment. ☐ Control erosion and avoid introducing sediment from surrounding land uses onto permeable pavements. Do not allow muddy construction equipment on the base material or pavement. Do not allow sediment-laden runoff onto permeable pavements or base materials. ☐ Clean, using manufacturer's procedures, pavements or subgrade fouled with sediments or no longer passing an initial infiltration test until infiltrating per design or replaced. ☐ Keep all heavy equipment off existing soils under GSI BMPs that have been excavated to final grade in order to retain the infiltration rate of the soils.	

[a] A small project is defined as one with less than 5,000 square feet of new plus replaced impervious surface, and less than 1 acre of land-disturbing activity.
[b] Recommended BMPs provide further guidance for minimizing potential stormwater pollution resulting from activities.

Construction Stormwater Pollution Prevention Plan Checklist

Project Name: _____

City Reference No. _____

Construction Permit No. _____

Review Date: _____

On-site Inspection Review Date: _____

Construction SWPPP Reviewer: _____

Table 1b. Checklist to Select Large Project Construction BMPs.

Element	Element	Project Name: _____ Large Project [a] (check selection)	If not applicable, describe why in the space below.
1	Mark Clearing Limits and Critical Areas	Required BMPs: ☐ E1.30 Preserving Natural Vegetation (refer to *Section 4.1.6*) ☐ E1.35 Buffer Zones (refer to *Section 4.1.7*)	
2	Retain Top Layer	Required BMP: Within the boundaries of the project site, retain the duff layer, top soil, and native vegetation, if there is any, in an undisturbed state to the maximum extent feasible. If it is not feasible to retain the top layer in place, stockpile on site, cover to prevent erosion, and replace immediately upon completion of the ground disturbing activities to the maximum extent feasible.	
3	Establish Construction Access	Required BMPs: ☐ E2.10 Stabilization Construction Entrance (refer to *Section 4.2.2*) ☐ E2.15 Tire Wash (refer to *Section 4.2.3*) ☐ E2.20 Construction Road Stabilization (refer to *Section 4.2.4*)	
4	Protect Downstream Properties and Receiving Waters	Required BMP for contributing area of 3 acres or greater: ☐ DOE BMP C241 Temporary Sediment Pond (or Basin)	
5	Prevent Erosion and Sediment Transport from the Site	Required BMPs: ☐ E3.10 Filter Fence (refer to *Section 4.3.1*) ☐ DOE BMP C231 ☐ E3.20 Gravel Filter Berm (refer to *Section 4.3.2*) AND ☐ E3.40 Sediment Trap (refer to *Section 4.3.6*) OR ☐ DOE BMP C241 Temporary Sediment Pond (or Basin) OR ☐ E3.50 Portable Sediment Tank (refer to *Section 4.3.7*) Additional recommended BMPs: ☐ E2.95 Turbidity Curtain (refer to *Section 4.2.12*) ☐ E3.30 Vegetated Strip (refer to *Section 4.3.4*) ☐ E3.35 Straw Wattles (refer to *Section 4.3.5*) ☐ E3.60 Construction Stormwater Filtration (refer to *Section 4.3.8*) ☐ DOE BMP C250 Construction Stormwater Chemical Treatment	

Table 1b (continued). Checklist to Select Large Project Construction BMPs.

Element	Element	Project Name: _____ Large Project [a] (check selection)	If not applicable, describe why in the space below.
6	Prevent Erosion and Sediment Transport From the Site by Vehicles	Required BMPs: ☐ E3.65 Cleaning Inlets and Catch Basins (refer to *Section 4.3.9*) ☐ E3.70 Street Sweeping and Vacuuming (refer to *Section 4.3.10*)	
7	Stabilize Soils	Required BMPs for all exposed soils and stockpiles – one or more of the following: ☐ E1.10 Temporary Seeding (refer to *Section 4.1.2*) ☐ E1.15 Mulching, Matting, and Compost Blankets (refer to *Section 4.1.3*) ☐ E1.20 Clear Plastic Covering (refer to *Section 4.1.4*) ☐ E1.40 Permanent Seeding and Planting (refer to *Section 4.1.8*) ☐ E1.45 Sodding (refer to *Section 4.1.9*) ☐ E2.45 Dust Control (refer to *Section 4.2.7*) ☐ DOE BMP C130 Surface Roughening ☐ DOE BMP C131 Gradient Terracing ☐ DOE BMP C126 Polyacrylamide for Soil Erosion Protection	
8	Protect Slopes (refer to the Environmentally Critical Areas ordinance [SMC 25.09.180] for additional requirements and development standards for steep slopes)	Required BMPs – one or more of the following: ☐ Level Spreader (refer to *Appendix E*) ☐ E2.35 Check Dams (refer to *Section 4.2.5*) ☐ E2.40 Triangular Silt Dike (Geotextile-Encased Check Dam) (refer to *Section 4.2.6*) ☐ Pipe Slope Drains (refer to *Appendix E*) ☐ E2.70 Subsurface Drains (refer to *Section 4.2.10*) ☐ E2.80 Earth Dike and Drainage Swale (refer to *Section 4.2.11*) ☐ DOE BMP C130 Surface Roughening ☐ DOE BMP C131 Gradient Terracing ☐ DOE BMP C201 Grass-Lined Channels	
9	Protect Storm Drains	Required BMPs: ☐ E3.25 Storm Drain Inlet Protection (refer to *Section 4.3.3*) ☐ E3.65 Cleaning Inlets and Catch Basins (refer to *Section 4.3.9*) ☐ E3.25 Street Sweeping and Vacuuming (refer to *Section 4.3.10*)	

Table 1b (continued). Checklist to Select Large Project Construction BMPs.

Element	Element	Project Name: _____ Large Project [a] (check selection)	If not applicable, describe why in the space below.
10	Stabilize Channels and Outlets	Required BMPs – one or more of the following: ☐ Level Spreader (refer to *Appendix E*) ☐ E2.35 Check Dams (refer to *Section 4.2.5*) ☐ E2.80 Earth Dike and Drainage Swale (refer to *Section 4.2.11*) ☐ Outlet Protection (refer to *Appendix E*) ☐ DOE BMP C201 Grass-Lined Channels ☐ DOE BMP C202 Channel Lining ☐ DOE BMP C203 Water Bars	
11	Control Pollutants (also refer to Volume 4 - Source Control)	Required BMPs: ☐ C1.15 Material Delivery, Storage and Containment (refer to *Section 5.1.2*) ☐ C1.20 Use of Chemicals During Construction (refer to *Section 5.1.3*) ☐ C1.25 Demolition of Buildings (refer to *Section 5.1.4*) ☐ C1.30 Building Repair, Remodeling, and Construction (refer to *Section 5.1.5*) ☐ C1.35 Sawcutting and Surfacing Pollution Prevention (refer to *Section 5.1.6*) ☐ C1.45 Solid Waste Handling and Disposal (refer to *Section 5.1.8*) ☐ C1.50 Disposal of Asbestos and Polychlorinatedbiphenols (PCBs) (refer to *Section 5.1.9*) ☐ C1.55 Airborne Debris Curtain (refer to *Section 5.1.10*) ☐ C1.56 Concrete Handling and Disposal (refer to *Section 5.1.11*) ☐ C1.59 High pH Neutralization Using CO_2 (refer to *Section 5.1.12*)	
12	Control Dewatering	Required BMP: ☐ C1.40 Temporary Dewatering (refer to *Section 5.1.7*)	
13	Maintain BMPs	Required BMP: ☐ Maintain and repair all temporary and permanent erosion and sediment control BMPs as needed to assure continued performance of their intended function	

Table 1b (continued). Checklist to Select Large Project Construction BMPs.

Element	Element	Project Name: _____ Large Project [a] (check selection)	If not applicable, describe why in the space below.
14	Inspect BMPs	Required BMP: ☐ Inspect, maintain and repair all BMPs as needed to assure continued performance of their intended function ☐ C1.10 Certified Erosion and Sediment Control Lead For projects over one (1) acre, inspections shall be conducted by the Certified Erosion and Sediment Control Lead identified in the Large Project Construction Stormwater Control Plan.	
15	Execute Construction Stormwater Control Plan	Required BMPs: Implement and maintain an updated Construction Stormwater Control Plan beginning with initial land disturbance. ☐ Retain the Large Project Construction Stormwater Control Plan on site or within reasonable access to the site. Modify the plan as needed. Coordination with Utilities, Contractors, and Others ☐ The primary project proponent shall evaluate, with input from utilities and other contractors, the stormwater management requirements for the entire project, including the utilities, when preparing the Small Project Construction Stormwater Control Plan. Project Close-out ☐ Remove all temporary erosion and sediment control BMPs within 5 business days after final site stabilization is achieved, or after they are no longer needed, whichever is later.	
16	Minimize Open Trenches	Required BMP: In the construction of underground utility lines, where feasible, no more than one hundred and fifty (150) feet of trench shall be opened at one time, unless soil is replaced within the same working day. Where consistent with safety and space considerations, place excavated material on the uphill side of trenches. Trench dewatering devices shall discharge into a sediment trap or sediment pond.	

Table 1b (continued). Checklist to Select Large Project Construction BMPs.

Element	Element	Project Name: _____ Large Project [a] (check selection)	If not applicable, describe why in the space below.
17	Phase the Project	Required BMPs: Construction Phasing ☐ Phase development projects where feasible in order to prevent soil erosion and, to the maximum extent practicable, the transport of sediment from the site during construction. Seasonal Work Limitations ☐ From October 1 through April 30, clearing, grading, and other soil disturbing activities will be subject to additional limitations.	
18	Install Permanent Flow Control and Water Quality Facilities	Refer to *Volume 1* for applicable minimum requirements and *Volume 3* for BMP design.	
19	Protect Green Stormwater Infrastructure BMPs	☐ Protect all Green Stormwater Infrastructure (GSI) BMPs from sedimentation through installation and maintenance of erosion and sediment control BMPs. Restore the BMPs to their fully functioning condition if they accumulate sediment during construction. Restoring the GSI BMP must include removal of sediment and any sediment-laden soils, and replacing the removed soils with soils meeting the design specification. ☐ Prevent compaction of GSI BMPs by excluding construction equipment and foot traffic. Protect established lawn and landscaped areas from compaction due to construction equipment. ☐ Control erosion and avoid introducing sediment from surrounding land uses onto permeable pavements. Do not allow muddy construction equipment on the base material or pavement. Do not allow sediment-laden runoff onto permeable pavements or base materials. ☐ Clean, using manufacturer's procedures, pavements or subgrade fouled with sediments or no longer passing an initial infiltration test until infiltrating per design or replaced. ☐ Keep all heavy equipment off existing soils under GSI BMPs that have been excavated to final grade in order to retain the infiltration rate of the soils.	

[a] A large project is one with greater than or equal to 5,000 square feet of new plus replaced impervious surface, or greater than or equal to 1 acre of land-disturbing activity.
[b] Recommended BMPs provide further guidance for minimizing potential stormwater pollution resulting from activities.

Construction Stormwater Pollution Prevention Plan Checklist

Project Name: _____

City Reference No. _____

Construction Permit No. _____

Review Date: _____

On-site Inspection Review Date: _____

Construction SWPPP Reviewer: _____

CHAPTER 4 – STANDARDS AND SPECIFICATIONS FOR CONSTRUCTION EROSION AND SEDIMENTATION CONTROL (SOURCE CONTROL)

This chapter contains the standards and specifications for erosion and sediment control practices that form the backbone of erosion and sediment control planning in Seattle. These BMPs are grouped according to their method of controlling erosion and sedimentation at construction sites:

- Cover Practices (*Section 4.1*)
- Erosion Control Practices (*Section 4.2*)
- Sediment Retention Practices (*Section 4.3*)

Refer to the sections for a list of BMPs in each category.

All temporary erosion and sediment control BMPs **must be removed within 5 business days** after final site stabilization is achieved, or after they are no longer needed, whichever is later. In either case, trapped sediment must be removed or stabilized on site and the disturbed areas permanently stabilized.

The standards and specifications for each BMP have been divided into six sections to facilitate the selection process and implementation:

1. Definition
2. Purpose
3. Conditions Where Practice Applies
4. Planning Considerations
5. Design Criteria
6. Maintenance

Note that "Conditions Where Practice Applies" always refers to site conditions. As site conditions change, BMPs must be changed to remain in compliance with the Stormwater Code.

4.1. Cover Practices

The cover BMPs for erosion and sedimentation control can be divided into two categories:

1. Temporary cover practices, such as temporary seeding and clear plastic covering (beginning at *Section 4.1.1*)
2. Permanent cover practices, such as sodding and planting (beginning at *Section 4.1.5*)
3. The requirements for maintaining permanent BMPs are included with each description; however, all temporary and permanent erosion and sediment control practices shall be maintained and repaired as needed to assure continued performance of their intended function.

4.1.1. Temporary Cover Practices

Temporary cover BMPs are implemented to provide a cover to soils exposed during the life of the project. Soil stockpiles must be stabilized from erosion; protected with sediment trapping measures; and where possible, located away from storm drain inlets, waterways, and drainage channels. From October 1 to April 30, no soils shall remain exposed and unworked for more than 2 days. From May 1 to September 30, no soils shall remain exposed and unworked for more than 7 days.

More than one BMP may be required for effective protection of steeper slopes or where the soils are more erodible.

The standards and specifications for temporary cover BMPs are described in the sections below and include:

- BMP E1.10: Temporary Seeding (*Section 4.1.2*)
- BMP E1.15: Mulching, Matting, and Compost Blankets (*Section 4.1.3*)
- BMP E1.20: Clear Plastic Covering (*Section 4.1.4*)
- Polyacrylamide for soil erosion protection – refer to DOE BMP C126

4.1.2. BMP E1.10: Temporary Seeding

4.1.2.1. Description

The establishment of temporary vegetative cover on disturbed areas by seeding with appropriate rapidly growing annual plants.

4.1.2.2. Purpose

To provide temporary soil stabilization by planting grasses and legumes to areas that would remain bare for more than 7 days where permanent cover is not necessary or appropriate (Figure 1).

Figure 1. Hydroseeding Method.

4.1.2.3. Conditions Where Practice Applies

- Permanent structures are to be installed or extensive re-grading will occur prior to the establishment of permanent vegetation
- Areas which will not be subjected to heavy wear by construction traffic
- Areas sloping up to 15 percent for 100 feet or less (where temporary seeding is the only BMP used)

4.1.2.4. Planning Considerations

Sheet erosion, caused by the impact of rain on bare soil, is the source of most fine particles in sediment. To reduce this sediment load in runoff, the soil surface itself should be protected. The most efficient and economical means of controlling sheet and rill erosion is to establish

vegetative cover. Annual plants that sprout rapidly and survive for only one growing season are suitable for establishing temporary vegetative cover. Temporary seeding is effective when combined with construction phasing so that bare areas of the site are minimized at all times.

Temporary seeding may prevent costly maintenance operations on other erosion control systems. For example, sediment basin clean-outs will be reduced if the drainage area of a basin is seeded where grading and construction are not taking place. Perimeter dikes will be more effective if not choked with sediment.

Temporary seeding is essential to preserve the integrity of earthen structures used to control sediment, such as dikes, diversions, and the banks and dams of sediment basins.

Proper seedbed preparation and the use of quality seed are important in this practice just as in permanent seeding. Failure to carefully follow sound agronomic recommendations will often result in an inadequate stand of vegetation that provides little or no erosion control.

4.1.2.5. Design Criteria

- **Time of Seeding** – Seeding should preferably be done between April 1 and June 30, and September 1 through October 31. If seeding is done in the months of July and August, irrigation will be required until 75 percent grass cover is established. If seeding is done between October 1 and March 31, mulch immediately after seeding.

- **Site Preparation** – Before seeding, install needed surface runoff control measures such as gradient terraces, earth dike/drainage swales, level spreaders, and sediment basins.

- **Seedbed Preparation** – The seedbed should be firm with a fairly fine surface. All soil should be roughened no matter what the slope. If compaction is required for engineering purposes, slopes must be track walked before seeding. Perform all cultivating operations across or at right angles to the slope. A minimum of 2 to 4 inches of tilled topsoil is required.

- **Fertilization** – Apply fertilizers as per suppliers and/or Soil Conservation Service recommendations or apply a 10-4-6 ratio of nitrogen-phosphorus-potassium (N-P-K) fertilizer at a rate of 90 pounds per acre. Developments adjacent to receiving waters must use non-phosphorus fertilizer.

- **Seeding** – Seeding mixtures will vary depending on the exact location, soil type, slope, etc. Information on mixes may be obtained from local suppliers, the Washington State Department of Transportation, or the Soil Conservation Service. The seed mix in Table 2 is supplied as guidance. Hydroseed applications should include a minimum of 1,500 pounds per acre of mulch with 3 percent tackifier.

- **Mulching** – Mulch is required for seeding. Mulch can be applied on top of the seed or simultaneously by hydroseeding. Refer to BMP 1.15 Mulching, Matting, and Compost Blankets for more information on mulching.

- **Tackifier** – Apply a tackifier with a tracer to indicate where the seeding has been applied.

Table 2. Seeding Mixture. [a]

Name	Proportion by Weight
Turf-type perennial rye (blend of 3 approved varieties) [b]	50 percent
Creeping Red Fescue [b]	20 percent
Chewings Fescue [b]	20 percent
Hard Fescue	10 percent

[a] Hydro-seeding applications with approved seed-mulch-fertilizer mixtures may also be used. Mixture must be no less than 98 percent pure and have a minimum germination rate of 90 percent.

[b] Refer to City of Seattle Standard Specification 9-14.2(1) for approved varieties.

4.1.2.6. Maintenance

- **Seeding** should be supplied with adequate moisture. Supply water as needed, especially in abnormally hot or dry weather or on adverse sites. Water application rates should be controlled to prevent runoff.

- **Re-seeding** – Re-seed areas which fail to establish at least 80 percent vegetative cover as soon as such areas are identified. If reseeding is ineffective, use an alternate method, such as sodding, mulching, or nets/mats.

4.1.3. BMP E1.15: Mulching, Matting, and Compost Blankets

4.1.3.1. Description

Application of plant residues or other suitable materials to the soil surface.

4.1.3.2. Purpose

To provide immediate protection to exposed soils during the period of short construction delays, or over winter months through the application of plant residues, or other suitable materials, to exposed soil areas.

Mulches also enhance plant establishment by conserving moisture and moderating soil temperatures. Mulch helps hold fertilizer, seed, and topsoil in place in the presence of wind, rain, and runoff and maintains moisture near the soil surface.

4.1.3.3. Conditions Where Practice Applies

- Areas that cannot be seeded because of the season, or are otherwise unfavorable for plant growth
- Areas that have been seeded as specified in Temporary Seeding (BMP E1.10)
- In an area of greater than 25 percent slope, mulching should immediately follow seeding.

4.1.3.4. Planning Considerations

Mulches are applied to the soil surface to conserve a desirable soil property or to promote plant growth. Surface mulch is one of the most effective means of controlling runoff and erosion on disturbed land (refer to Table 3 for a comparison of pollutant loading reductions for various mulches).

Mulches can increase the infiltration rate of the soil, reduce soil moisture loss by evaporation, prevent crusting and sealing of the soil surface, modify soil temperatures, and provide a suitable microclimate for seed germination.

Organic mulch materials, such as compost, straw, wood chips, bark, and wood fiber, have been found to be the most effective. Compost has the advantage of being reusable by tilling it in to meet the City's soil amendment requirement at the end of the project. A variety of nets and mats have been developed for erosion control in recent years, and these are also used as mulches, particularly in critical areas such as waterways. They may be used to hold other mulches to the soil surface.

The choice of materials for mulching will be based on the type of soil to be protected, site conditions, season, and economics. It is especially important to mulch liberally in mid-summer and prior to winter, and on cut slopes and southern slope exposures.

Compost Blankets

Compost for use as a mulch layer (i.e., a compost blanket) should meet the definition of "composted materials," including contaminant limits, in WAC 173-350-220. Coarsely screened compost (1-inch minus screen) provides superior protection in higher rainfall and on steeper

Table 3. Guide to Mulch Materials, Rates and Uses.

Mulch Material	Quality Standards	Application Depth	Remarks [a]
Gravel, slag or crushed rock	• Washed • 0.75 to 1.5 inch size	3 inches	• Excellent mulch for short slopes and around woody plants and ornamentals. • Use where subject to foot traffic. Approximately 2,000 pounds per cubic yard.
Straw	• Air dried • Free from unwanted seeds and coarse material	Minimum 2 inches	• Use for immediate protection, hand application generally requires greater thickness than blown straw. • Thickness of straw may be reduced by half when used in conjunction with seeding. • Most common and widely used mulching material. Can be used in critical erosion areas.
Wood fiber Cellulose (partially digested wood fibers)	• Dyed green • Should not contain growth-inhibiting factors	Minimum 2 inches	• If used on critical areas, double normal application rate. • Apply with a hydromulcher with seed and tackifier. No tie-down required. • Fibers should be less than 0.75-inch; packaged in 100-pound bags.
Compost blanket, mulch, and compost	No visible water or dust during handling	Minimum 2 inches	• Excellent mulch for protecting final grades until landscaping. • Can be directly seeded or tilled into soil as an amendment. • A 3-inch layer provides superior protection.
Chipped site vegetation	• Average size shall be several inches • Gradations from fines to 6 inches	Minimum 2 inches	• Cost-effective way to dispose clear and grubbing debris. • Should not be used on slopes above 10 percent. Not recommended within 200 feet of receiving waters.
Wood-based mulch	• No visible water or dust during handling • Must be purchased from supplier with Solid Waste Handling Permit (unless exempt)	Minimum 2 inches	• Often called hog (or hogged) fuel and is useful organic matter. • Typically does not provide any weed seed control. • Prevent introduction of weed plants or seeds with application.

[a] All mulches will provide some degree of (1) erosion control, (2) moisture conservation, (3) weed control, and (4) reduction of soil crusting.

slopes, and may be tilled in later for tree and shrub planting areas. A finer compost (1/2- or 5/8-inch minus screen) may be preferred where it will be tilled in later before planting lawn areas. A 2-inch thick compost blanket is usually sufficient, but 3 inches provides superior protection.

Compost blankets are a preferred cover practice because they:

- Provide superior ground contact compared to rolled mats
- Are more effective at filtering both sediment and pollutants such as oil
- May be seeded when placed and promote superior seed germination
- Can be reused as compost at the end of the project by tilling it in to meet the City's Soil Amendment BMP (*Volume 3*)

Chemical Mulches and Soil Binders

The use of synthetic, spray-on materials (except tacking agents used with hydro-seeding) is not recommended because they can create impervious surfaces and, possibly, adverse effects on water quality. Research shows that they can cause more erosion when used than bare exposed soil.

Nets and Mats

Used alone, netting does not retain soil moisture or modify soil temperature. It stabilizes the soil surface while grasses are being established, and is useful in grassed drainage channels and on slopes. Light netting may also be used to hold other mulches in place. Its relatively high cost makes it most suitable for small sites.

The most critical part of installing nets and mats is obtaining firm, continuous contact between material and soil. Without such contact, the material is useless and erosion occurs. It is important to use an adequate number of staples and to roll the material after laying it to ensure soil is protected.

4.1.3.5. Design Criteria

- **Site Preparation** – Same as Temporary Seeding (BMP E1.10)
- Mulch Materials, Application Rates, and Specifications – refer to Table 3
- Erosion nets and mats may be used on level areas, on slopes (Figure 2a) up to 25 percent, and in channels (Figure 2b). Where soil is highly erodible, nets shall only be used in connection with organic mulch such as straw and wood fiber. Jute nets shall be heavy, uniform cloth woven of single jute yarn, which if 36 to 48 inches wide shall weigh an average of 1.2 pounds per linear yard. It must be so applied that it is in complete contact with the soil. Netting shall be securely anchored to the soil with No. 11 gauge wire staples at least 6 inches long, and overlap 2 inches across and 6 inches down.

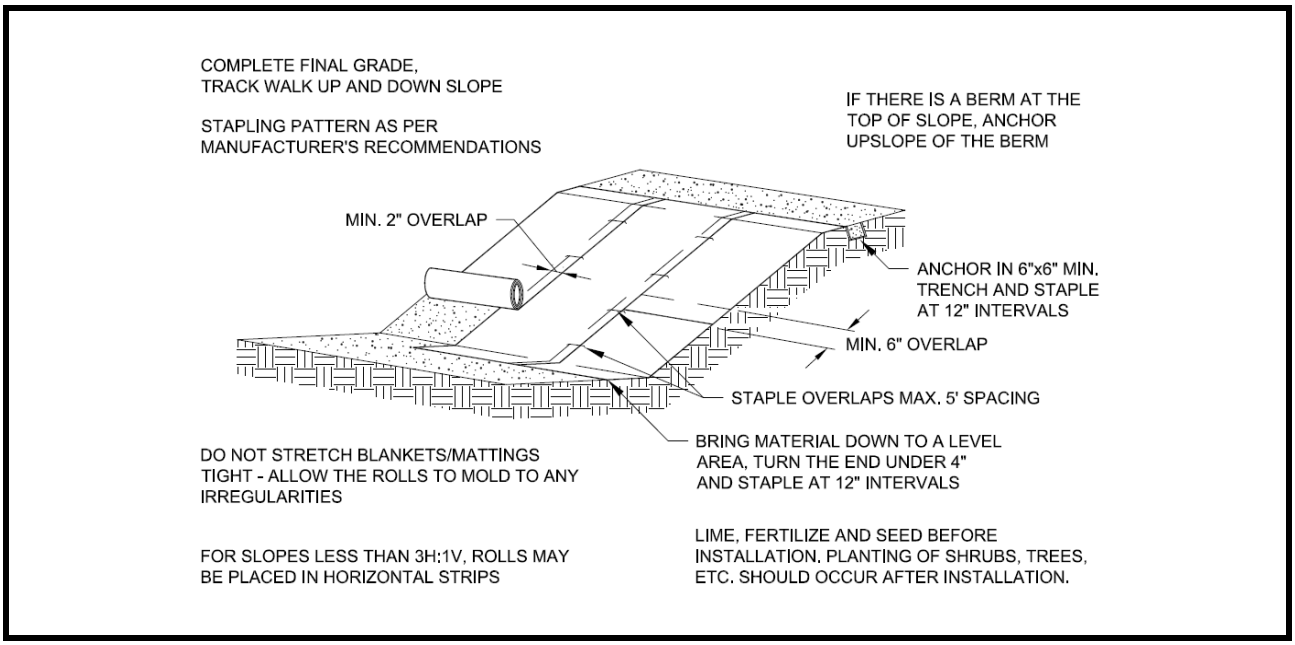

Figure 2a. Mat Installation on Slope.

- To install mats on slopes:
  - First complete the final grade and track walk up and down the slope. Install hydromulch with seed and fertilizer.
  - Dig a small trench, approximately 6 inches wide by 6 inches deep, along the top of the slope.
  - Install the leading edge of the mat into the small trench and staple approximately every 12 inches (metal, U-shaped, and a minimum of 6 inches long). Longer staples shall be used in sandy soils. Biodegradable stakes are also available.
  - Roll the mat slowly down the slope as the installer walks backwards, with the mat resting against the installer's legs.
  - Install staples as the mat is unrolled. Do not allow the mat to roll down the slope unattended. Do not allow anyone to walk on the mat after it is in place. If the mat is not long enough to cover the entire slope length, the trailing edge of the upper mat should overlap the leading edge of the lower mat and be stapled.
  - On steeper slopes, this overlap should be installed in a small trench, stapled, and covered with soil.
- Excelsior blankets are considered protective mulches and may be used alone on erodible soils and during all times of year.

4.1.3.6. Maintenance

- Mulched areas should be checked periodically, especially following severe storms, when damaged areas of mulch or tie-down material should be repaired.

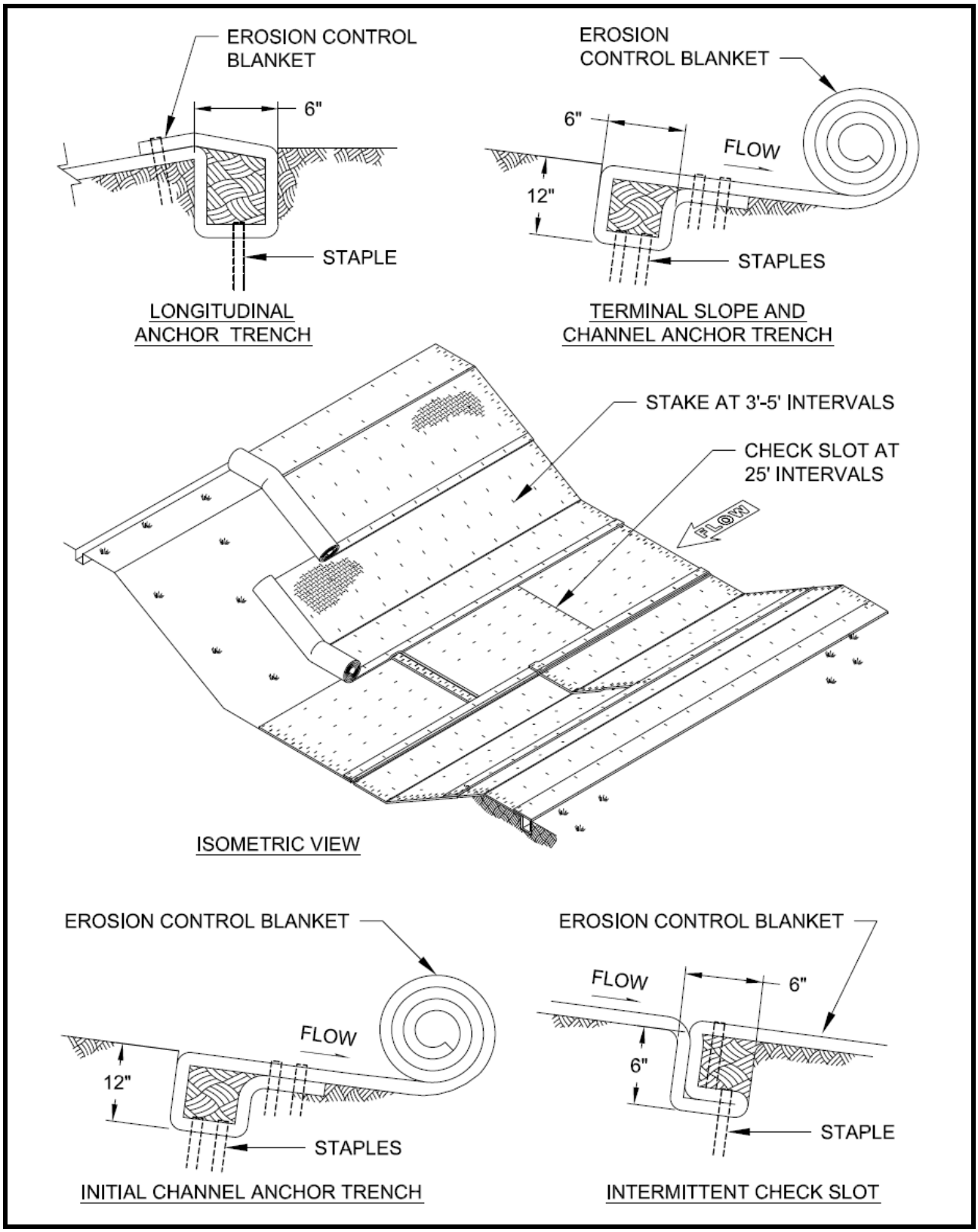

Figure 2b. Mat Installation on a Channel.

4.1.4. BMP E1.20: Clear Plastic Covering

4.1.4.1. Description

The covering with clear plastic sheeting of bare areas that need immediate protection from erosion.

4.1.4.2. Purpose

To provide immediate temporary erosion protection to slopes and disturbed areas that cannot be covered by mulching, to provide protection to plantings during winter, or to cover stockpiles. Clear plastic also is used to protect disturbed areas that must be covered during short periods of inactivity to meet November 1 through March 31 cover requirements. Because of many disadvantages, clear plastic covering is the least preferred cover practice (Figure 3).

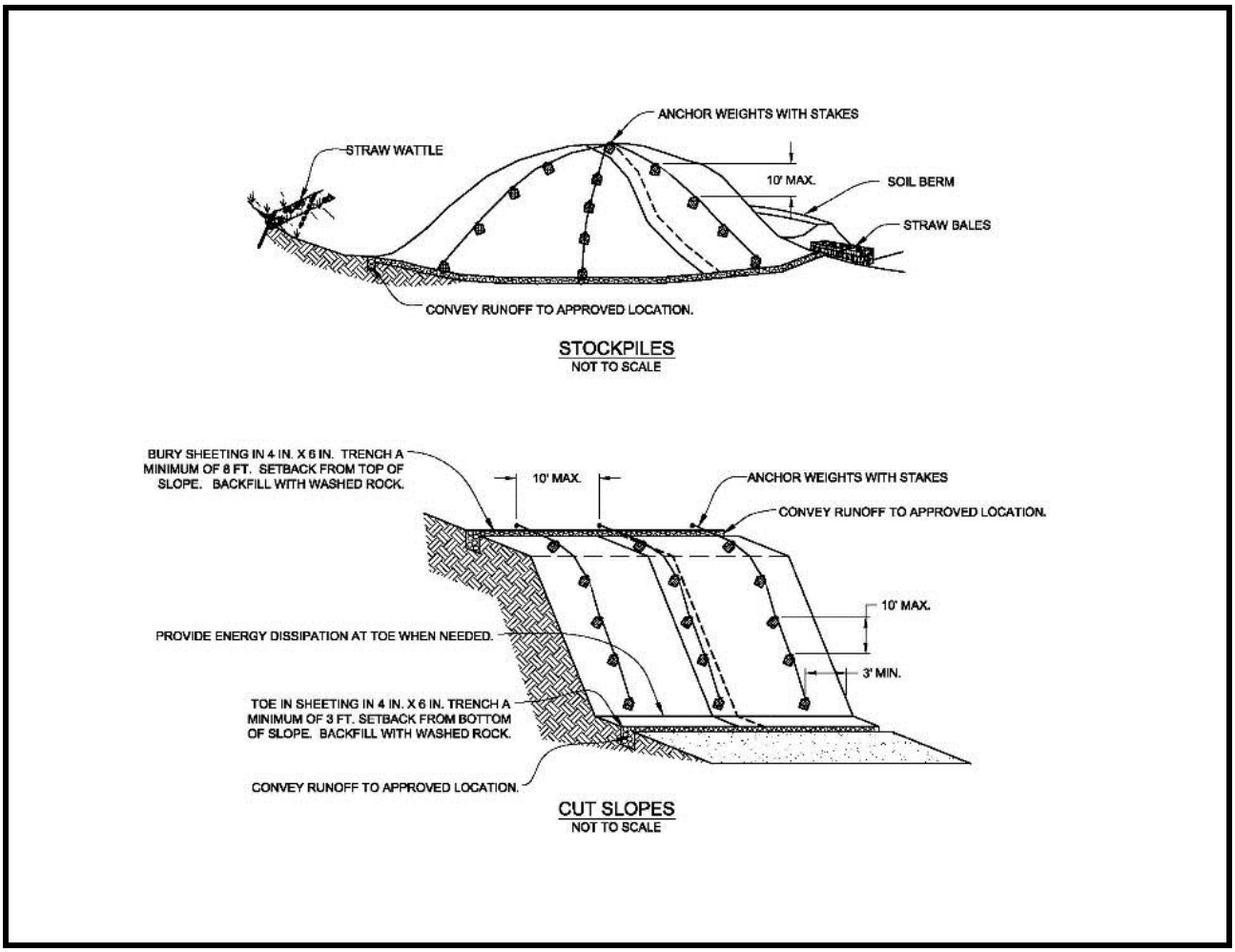

Figure 3. Stockpile Covered with Plastic Sheeting.

4.1.4.3. Conditions Where Practice Applies

- Disturbed areas that require immediate erosion protection for less than 30 days
- Areas seeded during the time period from November 1 to March 1

4.1.4.4. Planning Considerations

- Plantings at this time require clear plastic covering for germination and protection from heavy rains.

4.1.4.5. Design Criteria

- Clear plastic sheeting shall have a minimum thickness of 6 mil and shall meet the requirements of the City of Seattle Standard Specifications Section 9-14.5.
- Place plastic into a small (12-inch wide by 6-inch deep) slot trench at the top of the slope and backfill with soil to keep water from flowing underneath.
- Install covering and maintain tightly in place by using sandbags or tires on ropes with a maximum 10 foot grid spacing in all directions. Tape or weigh down all seams full length with at least a 1- to 2-foot overlap of all seams. Then roll, stake or tie all seams.
- Immediately install covering on areas seeded between November 1 to March 1, and keep covering in place until vegetation is firmly established.
- When the covering is used on unseeded slopes, leave in place until the next seeding period.
- Toe in sheeting at the top of the slope to prevent surface flow beneath the plastic. If erosion at the toe of a slope is likely, install a gravel berm, riprap, or other suitable protection at the toe of the slope in order to reduce the velocity of runoff.
- Remove sheeting as soon as is possible once vegetation is well grown to prevent burning the vegetation through the plastic sheeting, which acts as a greenhouse.

4.1.4.6. Maintenance

- Check regularly for rips and places where the plastic may be dislodged. Contact between the plastic and the ground should always be maintained. Any air bubbles found should be removed immediately or the plastic may rip during the next windy period. Re-anchor or replace the plastic as necessary.

4.1.5. Permanent Cover Practices

Permanent cover BMPs are implemented both during and upon completion of construction activities. Permanent cover reduces erosion wherever practicable and can be achieved primarily by limiting site disturbance during construction. For example, by preserving existing conifers approximately 50 percent of all rain that falls onto the trees will be retained during a storm. Up to 20 to 30 percent of this rain may never reach the ground but is taken up by the tree or lost to evaporation. Another benefit of permanent cover is that rain held in permanent vegetation (plantings, grass, trees) can be released slowly into the ground after a rain event.

***Note**: Equipment access and soil compaction is not allowed in areas where permanent cover is established.*

The City requires that all new, replaced, and disturbed topsoil is amended prior to completion of the project. Refer to *Volume 3, Project Stormwater Control* for guidance on soil amendment BMP requirements.

The standards and specifications for permanent cover BMPs are described below and include:

- BMP E1.30: Preserving Natural Vegetation (*Section 4.1.6*)
- BMP E1.35: Buffer Zones (*Section 4.1.7*)
- BMP E1.40: Permanent Seeding and Planting (*Section 4.1.8*)
- BMP E1.45: Sodding (*Section 4.1.9*)

4.1.6. BMP E1.30: Preserving Natural Vegetation

4.1.6.1. Description

Phase construction activities to minimize exposed soils and consequent erosion by clearing only where construction will occur.

4.1.6.2. Purpose

To reduce erosion by preserving natural vegetation wherever practicable (Figure 4).

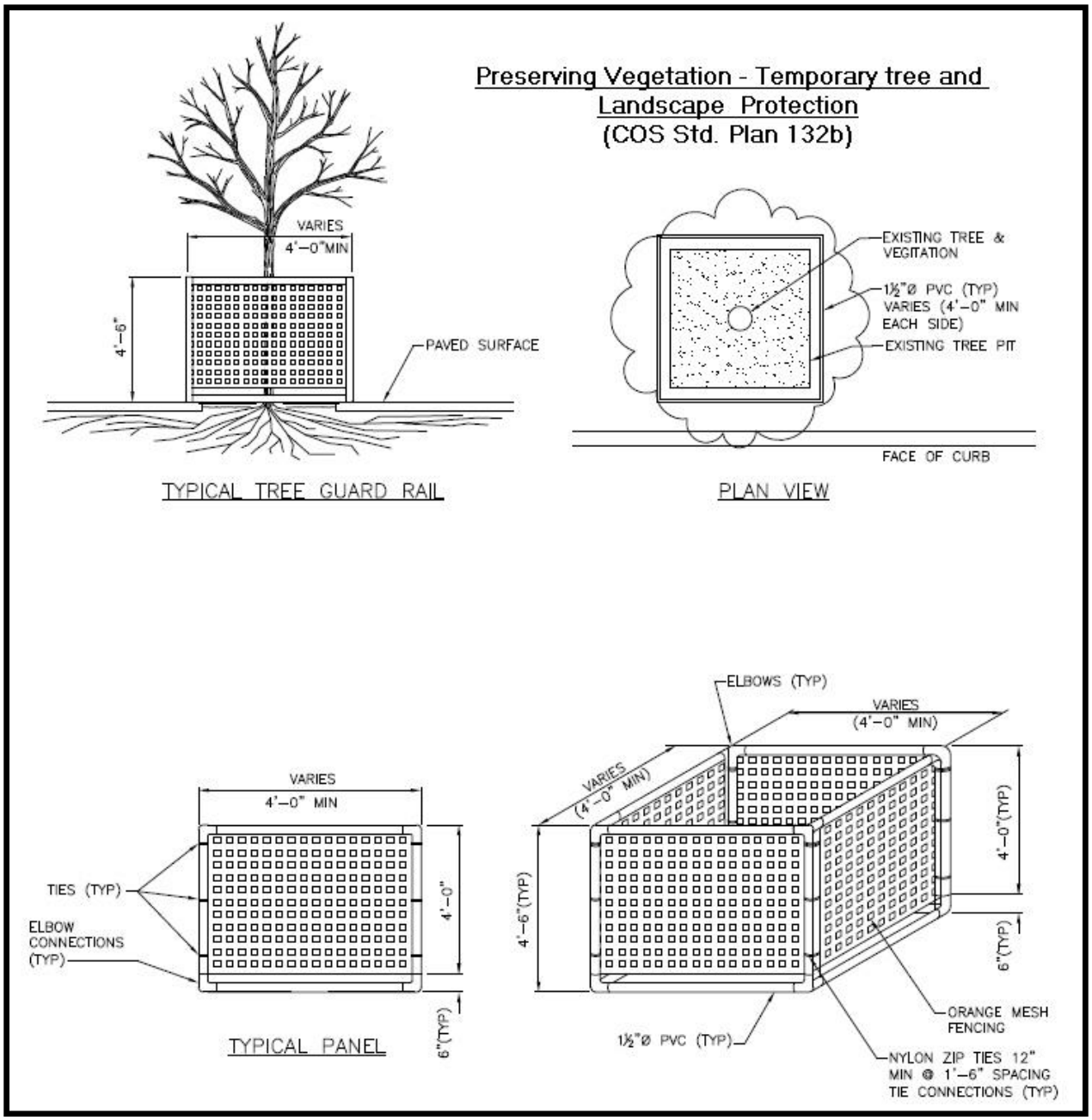

Figure 4. Preserving Vegetation.

4.1.6.3. Conditions Where Practice Applies

Natural vegetation should be preserved everywhere, and must be preserved with certain Environmentally Critical Areas (ECAs) pursuant to SMC, Chapter 25.09. Natural vegetation should be preserved especially on steep slopes, near perennial and intermittent watercourses or swales, and on building sites in wooded areas.

4.1.6.4. Planning Considerations

Building sites are often selected because of the presence of mature trees. However, unless sufficient planning and care are performed in the interval between buying the property and completing construction, much of this resource is likely to be destroyed. The property owner is ultimately responsible for protecting as many trees, along with their understory and groundcover, as possible. It takes 20 to 30 years for newly planted trees to provide the benefits for which we value trees so highly. Refer to SMC, Chapter 29.09 Trees and Vegetation and SMC, Chapter 25.11 Tree Protection for additional requirements for ECAs.

4.1.6.5. Design Criteria

It can be worthwhile to preserve natural vegetation both in the form of vegetated communities of trees and related understory plants, and in the form of individual trees retained along with the soil that supports them. The preservation of individual trees can be particularly challenging given the typical use of heavy construction equipment on site. Clear field marking is essential to guard against incidental impacts to the soil and or to the trunk, branches, and roots of the tree itself.

Design considerations include:

- Establish a monetary value for the tree or vegetated area and post this in some visible manner on protective fencing to help ensure care on the part of the site contractors. Monetary value is typically established by a professional in the tree care, landscape, and/or nursery industry. This professional should have value assessment experience in accordance with the "Guide for Plant Appraisal" (Council of Tree and Landscape Appraisers 2000). An aspect of appraisal includes application of local standards to help ensure the protection of plants that are desirable native or non-native species.

- Prior to beginning land disturbing activities, including clearing and grading, clearly mark all clearing limits, critical areas, and their buffers. Clearly flag and provide a rigid (chain link or similar) fence to protect areas around trees and vegetated areas to be retained. Where protection of all surfaces within the drip line of the tree or vegetated area is not possible, consult a tree care professional with credentials in urban forestry, landscape architecture, or a related field to develop an appropriate plan. The plan should apply the requirements defined in City of Seattle Standard Plans 132, 133, and 134.

- The duff layer, native top soil, and natural vegetation shall be retained in an undisturbed state to the maximum degree practicable.

- Trees and other plants need protection from three types of impacts:

- **Construction Equipment** – Impacts can occur above or below the ground level. Damage results from scarring, cutting of roots, and compaction of the soil. Roping or fencing a buffer zone around plants to be saved can prevent such injuries.
- **Grade Change** – Any grade change impacting areas within the drip line of an existing tree should be reviewed and approved by a tree care professional with local construction experience. Local experience is needed to ensure familiarity with the tree species and local conditions associated with soil, drainage, and pests or disease that may be factors. Where appropriate, systems may be designed utilizing structural or engineered soil mixes and/or "rootways" to ensure the circulation of air to roots impacted by fill.
- **Excavation** – Excavation within the drip line of trees commonly requires exploratory work utilizing hand equipment including the use of an air spade to fracture soil and reveal root locations without damage. Identifying the location of existing roots allows construction to occur within areas where roots are expected with minimal damage to critical root systems.

- For trees required to be preserved, any activities within the drip line requires oversight by a certified arborist or professional. For specific information about preserving mature trees and/or large plants, refer to references listed on the DPD Tree and Landscaping Guidance and Requirements website (http://www.seattle.gov/dpd/codesrules/codes/treeprotection/default.htm).
- In all situations involving vegetation preservation, it is fundamentally important to involve a qualified tree and/or vegetation care professional to assess the specific site issues. The above guidelines are designed to capture the major common issues associated with vegetation preservation; however, each site will be unique and would benefit from the input of a dedicated professional.

4.1.6.6. Maintenance

Inspect tree and protection areas regularly to make sure fencing has not been removed. If the fencing has been damaged, repair or replace immediately. If tree roots have been exposed or injured, "prune" cleanly with an appropriate pruning saw or loppers directly above the damaged roots and recover with native soils (with arborist oversight). Mechanical treatment of sap flowing trees (i.e., fir, hemlock, pine, soft maples) is not advised as sap forms a natural healing barrier.

4.1.7. BMP E1.35: Buffer Zones

4.1.7.1. Description

An undisturbed area or strip of natural vegetation or an established suitable planting that will provide a living filter to reduce soil erosion and runoff velocities.

4.1.7.2. Purpose

Natural buffer zones are used along streams and other receiving waters that need protection from erosion and sedimentation (Figure 5).

Figure 5. Vegetated Buffer Zone.

4.1.7.3. Conditions Where Practice Applies

Vegetative buffer zones can be used to protect natural swales and incorporated into the natural landscaping of an area. Critical-areas buffer zones should not be used as sediment treatment areas; these areas shall remain completely undisturbed.

4.1.7.4. Planning Considerations

The City's ECA regulations require undisturbed vegetative buffer zones from wetlands (SMC, Chapter 25.09.160), steep slope areas (SMC, Chapter 25.09.180), and fish and wildlife habitat

conservation areas (SMC, Chapter 25.09.200). Refer to the appropriate code section(s) for site-specific requirements.

4.1.7.5. Design Criteria

- Preserve natural vegetation or plantings in clumps, blocks, or strips. This is generally the easiest and most successful method.
- Leave all critical areas in a naturally vegetative condition.
- Fence clearing limits and keep all equipment and construction debris out of the natural vegetation.
- Keep all excavations outside of critical areas and the drip line of trees and shrubs.
- Do not push debris or extra soil into the buffer zone area because it will cause damage from burying and smothering.

4.1.7.6. Maintenance

Inspect the area frequently to make sure flagging remains in place and the area remains undisturbed.

4.1.8. BMP E1.40: Permanent Seeding and Planting

4.1.8.1. Description

- The establishment of perennial vegetative cover on disturbed areas

4.1.8.2. Purpose

- To establish permanent vegetation (i.e., grasses, legumes and trees and shrubs) as rapidly as possible to prevent soil erosion by wind or water, and to improve wildlife habitat and site aesthetics.
- To provide pollutant filtration (biofiltration) in vegetation-lined channels and to establish constructed wetlands as required.

4.1.8.3. Conditions Where Practice Applies

- Graded, final graded or cleared areas where permanent vegetative cover is needed to stabilize the soil
- Areas that will not be brought to final grade for a year or more
- Vegetation-lined channels
- Retention or detention ponds as required

4.1.8.4. Planning Considerations

Vegetation controls erosion by reducing the velocity and the volume of overland flow and protecting the bare soil surface from raindrop impact.

Land that has been disturbed requires vegetative cover. The most common and economical means of establishing this cover is by seeding grasses and legumes.

Advantages of seeding over other means of establishing plants include the small initial establishment cost, the wide variety of grasses and legumes available, low labor requirement, and ease of establishment in difficult areas.

Disadvantages that must be dealt with are the potential for erosion during the establishment stage, a need to reseed areas that fail to establish, limited periods during the year suitable for seeding, and a need for water and appropriate climatic conditions during germination.

Consider the microclimate(s) within the development area. Low areas may have frost pockets and require hardier vegetation since cold air tends to sink and flow towards low spots. South-facing slopes may be more difficult to re-vegetate because they tend to be sunnier and drier.

There are so many variables in plant growth that an end product cannot be guaranteed. Much can be done in the planning stages to increase the chances for successful seeding. Selection of the right plant materials for the site, good seedbed preparation, timing, and conscientious maintenance are important. Whenever possible, native species of plants should be used for landscaping. These plants are already adapted to the locale, and survivability should be higher than with exotic species.

Native species are also less likely to require irrigation; which can require extensive maintenance, is not cost-effective, nor an ecologically sound practice.

4.1.8.5. Design Criteria

- Vegetation cannot be expected to supply an erosion control cover and prevent slippage on a soil that is not stable due to its texture, structure, water movement, or excessive slope.

- Seeding should be done immediately after final shaping, except during the period of November 1 through March 1, when the site should be protected by mulching or plastic covering until the next seeding period. Seeding completed between July 1 and August 30 will require irrigation until 75 percent grass cover is established.

- Permanent vegetation may be in the form of grass-type growth by seeding or sodding, or it may be trees or shrubs, or a combination of these. Establishing this cover may require the use of supplemental materials, such as mulch or jute netting (refer to BMP E1.15).

- **Site Preparation:** Install temporary surface runoff control measures prior to seeding or planting to protect the surface from erosion until the vegetation is established. The temporary measures include gradient terraces, berms, dikes, level spreaders, drainage channels, and sediment basins.

- **Seeding Grasses and Legumes:** Prepare seedbed. If infertile or coarse textured subsoil will be exposed during land shaping, it is best to stockpile topsoil and re-spread it over the finished slope at a minimum 2- to 6-inch depth and roll it to provide a firm seedbed. If construction fills have left soil exposed with a loose, rough, or irregular surface, smooth with blade and roll. If cuts or construction equipment have left a tightly compacted surface, break with chisel plow or other suitable implement. Perform all cultivating operations across or at right angles to the slope (contoured), such as with cat tracks on the final pass. The seedbed should be firm with a fairly fine surface. All soil should be roughened before seeding. If compaction is required for engineering purposes, slopes must be track walked before seeding.

- **Soil Amendments:** Soil amendments shall be used to achieve organic matter and permeability performance defined in engineered soil/landscape systems. Rates will depend on site characteristics and soil, but as a guide, apply a 10-4-6 nitrogen-phosphorus-potassium (N-P-K) fertilizer ratio at a rate of 90 pounds per acre. Work in the amendment to a depth of a minimum of 6 inches with suitable equipment. Scatter amendments uniformly and work into the soil during seedbed preparation.

- **Seeding:** Apply an appropriate mixture to the prepared seedbed at a rate of 120 pounds/acre. The erosion seeding mixture for application is presented in Table 4.

  Cover the seed with topsoil or mulch no deeper than 1/2 inch. It is better to work topsoil into the upper soil layer rather than spread a layer of it directly onto the top of the native soil.

"Hydroseeding" applications with approved seed-mulch-fertilizer mixtures may also be used. Hydroseed applications should include a minimum of 1,500 pounds per acre of mulch with 3 percent tackifier.

Mulch is always required for seeding. Mulch can be applied on top of the seed or simultaneously by hydroseeding.

Table 4. Erosion Seeding Mixture.

Name	Percent by Weight
Turf-type Perennial Rye [1]	50 percent
Creeping Red Fescue	20 percent
Chewings Fescue	20 percent
Hard Fescue	10 percent

Notes:

[1] Three approved types; refer to City of Seattle Standard Specification 9-14.2.

- **Wetlands Seed Mixtures:** For newly created wetlands, a wetlands specialist should design plantings to provide the best chance of success. Refer to *Volume 3, Project Stormwater Control* for more information on constructed wetlands.

  Invasive plants like reed canary grass (*Phalaris arundinacea*) or purple loosestrife (*Lythrum salicaria*) are not allowed.

- **Tree and Shrub Planting:** Besides their erosion and sediment control values, trees and shrubs also provide natural beauty and wildlife benefits. When used for the latter, they are usually more effective when planted in clumps or blocks. These procedures should be followed:

  - Trees and shrubs will do best in topsoil. If no topsoil is available, they can be established in subsoil with proper amendment. If trees and shrubs are to be planted in subsoil, particular attention should be paid to amending the soil with generous amounts of organic matter. Mulches should also be used.

  - Good quality planting stock should be used. Normally 1- or 2-year old deciduous seedlings, and 3- or 4-year old coniferous transplants, when properly produced and handled are adequate. Stock should be kept cool and moist from time of receipt and planted as soon as possible.

  - Competing vegetation, if significant, should be pulled out of the area where the plant or plants are to be placed.

4.1.8.6. Maintenance

Inspect seeded areas for failure, make necessary repairs, and reseed areas with less than 80 percent cover immediately. Conduct a follow-up survey after 1 year and replace failed plants where necessary.

- If vegetative cover is inadequate to prevent rill erosion, apply other BMPs assuming vegetation was successful.
- If a stand has less than 40 percent cover, reevaluate choice of plant materials and quantities of lime and fertilizer. Re-establish the stand following recommendations for seedbed preparation and seeding, omitting lime and fertilizer in the absence of soil test results. If the season prevents re-sowing, mulch or jute netting is an effective temporary cover.

4.1.9. BMP E1.45: Sodding

4.1.9.1. Description

- Stabilizing fine-graded disturbed areas by establishing permanent grass stands with sod.

4.1.9.2. Purpose

- To establish permanent turf for immediate erosion protection or to stabilize drainage channels where concentrated overland flow will occur.

4.1.9.3. Conditions Where Practice Applies

- Disturbed areas which require immediate vegetative cover
- Drainage channels carrying intermittent flow, where immediate stabilization or aesthetics are factors and other locations particularly suited to stabilization with sod

4.1.9.4. Planning Considerations

Sod can initially be more costly than seeding, but the advantages often justify the increased initial costs. Sod provides immediate erosion control and a green surface. It must be protected from disturbance while it takes root. Sod is preferable to seed due to the following:

- Reduced failure as compared to seed and the lack of weeds
- Can be established nearly year round
- Immediate protection of the drainage channel after application

4.1.9.5. Design Criteria

- Shape and smooth the surface to final grade in accordance with the approved grading plan. Over excavate the swale 4 to 6 inches below design elevation to allow room for placing soil amendment and sod.
- Amend 4 inches (minimum) of compost into the top 8 inches of the soil if the organic content of the soil is less than 10 percent or the permeability is less than 0.6 inches per hour. Compost used should meet City of Seattle Standard Specifications 9-14.4(5) or 9-14.4(9) for Grade A quality compost.
- Add lime to reach a soil pH value of 6.5 (based on soil tests).
- Fertilize according to a soil test or in the absence of a test use available nitrogen, phosphorus and potash as prescribed for permanent seeding. Use fertilizers that are not highly soluble.
- Work lime and fertilizer into the soil 1 to 2 inches deep and smooth the surface.
- Lay strips of sod beginning at the lowest area to be sodded and perpendicular to the direction of water flow. Wedge strips securely in place. Square the ends of each strip

to provide for a close, tight fit. Stagger joints at least 12 inches. Staple the upstream edge of each sod strip if installed on slopes steeper than 18 percent.

- Roll the sodded area and irrigate.
- When sodding is carried out in alternating strips, or other patterns, seed the areas between the sod immediately after sodding.
- Sod should be free of weeds and be of uniform thickness (approximately 1 inch) and should have a dense root mat for mechanical strength.

4.1.9.6. Maintenance

- Inspect sodded areas regularly, especially after large storm events. Re-tack, re-sod, or re-seed and protect with a net or mat as necessary.

4.2. Erosion Control Practices

Naturally occurring (undisturbed) soil and vegetation provide important stormwater management functions including:

- Water infiltration
- Nutrient, sediment, and pollutant adsorption
- Sediment and pollutant biofiltration
- Water interflow storage and transmission
- Pollutant decomposition

These functions are largely lost when construction practices erode away native soil and vegetation.

This section presents BMPs that temporarily and permanently address erosion, including measures for construction site stabilization, slope protection, and drainage channel protection. The BMPs in this section have been divided into three basic groups based on these characteristics:

1. Temporary erosion control practices, such as road stabilization, check dams, and dust control (beginning at *Section 4.2.1*)
2. Permanent erosion control practices, such as gradient terraces and channel lining (refer to *Ecology's Stormwater Management Manual for Western Washington*)
3. Temporary or permanent erosion control practices, such as subsurface drains, earth dike and drainage swales, and outlet protection (beginning at *Section 4.2.9*)

The requirements for maintaining permanent erosion control BMPs are included with each description; however, all temporary and permanent erosion and sediment control practices shall be maintained and repaired as needed to assure continued performance of their intended function.

The City requires that all new, replaced, and disturbed topsoil is amended prior to completion of the project. Refer to *Volume 3 - Project Stormwater Control* for guidance on post-construction soil quality and depth requirements.

Permanent erosion control BMPs may need to be designed by an engineer and may have additional criteria for flow and water quality treatment requirements. Variations or alterations to the minimum BMP requirements typically require an engineer's approval.

4.2.1. Temporary Erosion Control BMPs

Although temporary erosion control BMPs are emphasized in this section, they may be combined with permanent control facilities to provide protection of downstream properties during construction. Temporary facilities provide siltation control, but downstream erosion

protection must also be provided. Refer to *Volume 3, Project Stormwater Control* for flow control requirements.

Temporary cover BMPs are described in the sections below and include:

- BMP E2.10: Stabilized Construction Entrance (*Section 4.2.2*)
- BMP E2.15: Tire Wash (*Section 4.2.3*)
- BMP E2.20: Construction Road Stabilization (*Section 4.2.4*)
- BMP E2.35: Check Dams (*Section 4.2.5*)
- BMP E2.40: Triangular Silt Dike (Geotextile-Encased Check Dam) (*Section 4.2.6*)
- BMP E2.45: Dust Control (*Section 4.2.7*)
- Level Spreader – refer to *Appendix E*
- Water Bars – refer to DOE BMP C203

4.2.2. BMP E2.10: Stabilized Construction Entrance

4.2.2.1. Description

A temporary rock-stabilized pad located at all points of vehicular ingress and egress on a construction project or site.

4.2.2.2. Purpose

To reduce the amount of mud, dirt, rocks, etc. transported onto public roads by motor vehicles or runoff by constructing a stabilized pad of rock spalls at entrances to construction sites and washing of tires during egress (Figure 6 and Figure 7).

Figure 6. Stabilized Construction Entrance.

Figure 7. Stabilized Construction Entrance.

4.2.2.3. Conditions Where Practice Applies

Whenever traffic will be leaving a construction site and moving onto a public road or other paved areas. Also refer to BMP E3.70 Street Sweeping and Vacuuming.

4.2.2.4. Planning Considerations

Construction entrances provide an area where mud can be removed from vehicle tires before they enter a public road. Construction entrances should be used in conjunction with the stabilization of construction roads to reduce the amount of mud picked up by vehicles. Construction vehicle access and exit shall be limited to one route, if possible.

It is important to note that this BMP will only be effective if sediment control is used throughout the rest of the construction site.

4.2.2.5. Design Criteria

- A separation geotextile shall be placed under the spalls to prevent the surface fines pumping up into the rock pad. The geotextile shall meet the standards presented in Table 5.

Table 5. Geotextile Standards.

Standard	Criteria
Grab Tensile Strength (ASTM D4751)	200 psi minimum
Grab Tensile Elongation (ASTM D4632)	30 percent maximum
Mullen Burst Strength (ASTM D3786-80a)	400 psi minimum
AOS (ASTM D4751)	20-45 (U.S. standard sieve size)

Notes:
AOS Apparent Opening Size.
ASTM American Society for Testing and Materials.
psi pounds per square inch.

- Material should be quarry spalls (where feasible), 4 inches to 8 inches size. Do not use crushed concrete, cement, or calcium chloride for construction entrance stabilization because these products raise pH levels in stormwater runoff.
- The rock pad shall be at least 12 inches thick and 100 feet in length for sites more than 1 acre; and may be reduced to the maximum practicable size when the size or configuration of the site does not allow the full 100-foot length.
- The access width shall be the full width of the vehicle ingress and egress area.
- Additional rock should be added periodically to maintain proper function of the pad.
- Fencing shall be installed as necessary to restrict traffic to the construction entrance.
- Whenever possible, the entrance shall be constructed on level ground with a firm, compacted subgrade. This can substantially increase the effectiveness of the pad and reduce the need for maintenance.

4.2.2.6. Maintenance

- If the entrance is not preventing sediment from being tracked onto pavement, then use alternative measures to keep the streets free of sediment. This may include an increase in the dimensions of the entrance, or the installation of a tire wash (BMP E2.15). Until the entrance is functioning property, street sweeping may be required.
- Maintain the entrance in a condition that will prevent tracking or flow of mud onto public rights-of-way. This may require periodic top dressing with 2-inch rock, as conditions demand, and repair and/or cleanout of any structures used to trap sediment. Thoroughly clean all materials spilled, dropped, washed, or tracked from vehicles onto roadways at the end of each day, or more frequently during wet weather.
- Remove any sediment that is tracked onto pavement by shoveling or street sweeping. Remove or stabilize on site sediment collected by sweeping.

- Street washing is allowed only after sediment is removed in accordance with the above bullet. Do not allow street washwater to enter the storm drain system or systems tributary to waters of the state. All street washwater must be collected and discharged either back onto the site or into the sanitary sewer (if permitted).
- Immediately remove any quarry spalls loosened from the pad that end up on the roadway.

4.2.3. BMP E2.15: Tire Wash

4.2.3.1. Description

A system that uses water to wash motor vehicle tires located at points of egress from a construction site.

4.2.3.2. Purpose

A tire wash is used to remove mud, dirt, rocks, etc. from tires and under carriages, and to prevent sediment from being transported onto public roads.

4.2.3.3. Conditions Where Practice Applies

When a stabilized construction entrance (refer to BMP E2.10) is not preventing sediment from being tracked onto pavement.

4.2.3.4. Planning Considerations

If approval by King County for wastewater discharge to the sanitary or combined sewer is not obtained, process wastewater can be collected and taken off-site to an approved location. Indicate the ultimate discharge point or collection point on the Construction Stormwater Control Plan sheet that clearly identifies the location(s) of stormwater discharges.

Tire washes provide an area where mud can be removed from vehicle tires before they enter a public road. Tire washes and construction entrances should be used in conjunction with the stabilization of construction roads to reduce the amount of mud picked up by vehicles.

It is important to note that this BMP will only be effective if sediment control is used throughout the rest of the construction site.

4.2.3.5. Design Criteria

- Suggested details are shown in Figure 8. A minimum of 6 inches of asphalt treated base (ATB) over crushed base material or 8 inches over a good subgrade is recommended to pave the tire wash.
- Use a low clearance truck to test the tire wash before paving. Either a belly dump or lowboy will work well to test clearance.
- Keep the water level from 12 to 14 inches deep to avoid damage to truck hubs and filling the truck tongues with water.
- Midpoint spray nozzles are only needed in extremely muddy conditions.
- Tire wash systems should be designed with a small change in grade, 6 to 12 inches for a 10-foot wide pond, to allow sediment to flow to the low side of the pond to help prevent re-suspension of sediment. A drainpipe with a 2- to 3-foot riser should be installed on the low side of the pond to allow for easy cleaning and refilling. Polymers may be used to promote coagulation and flocculation in a closed-loop system. Refer to DOE BMP C126 for additional information on Polyacrylamide (PAM) polymers.

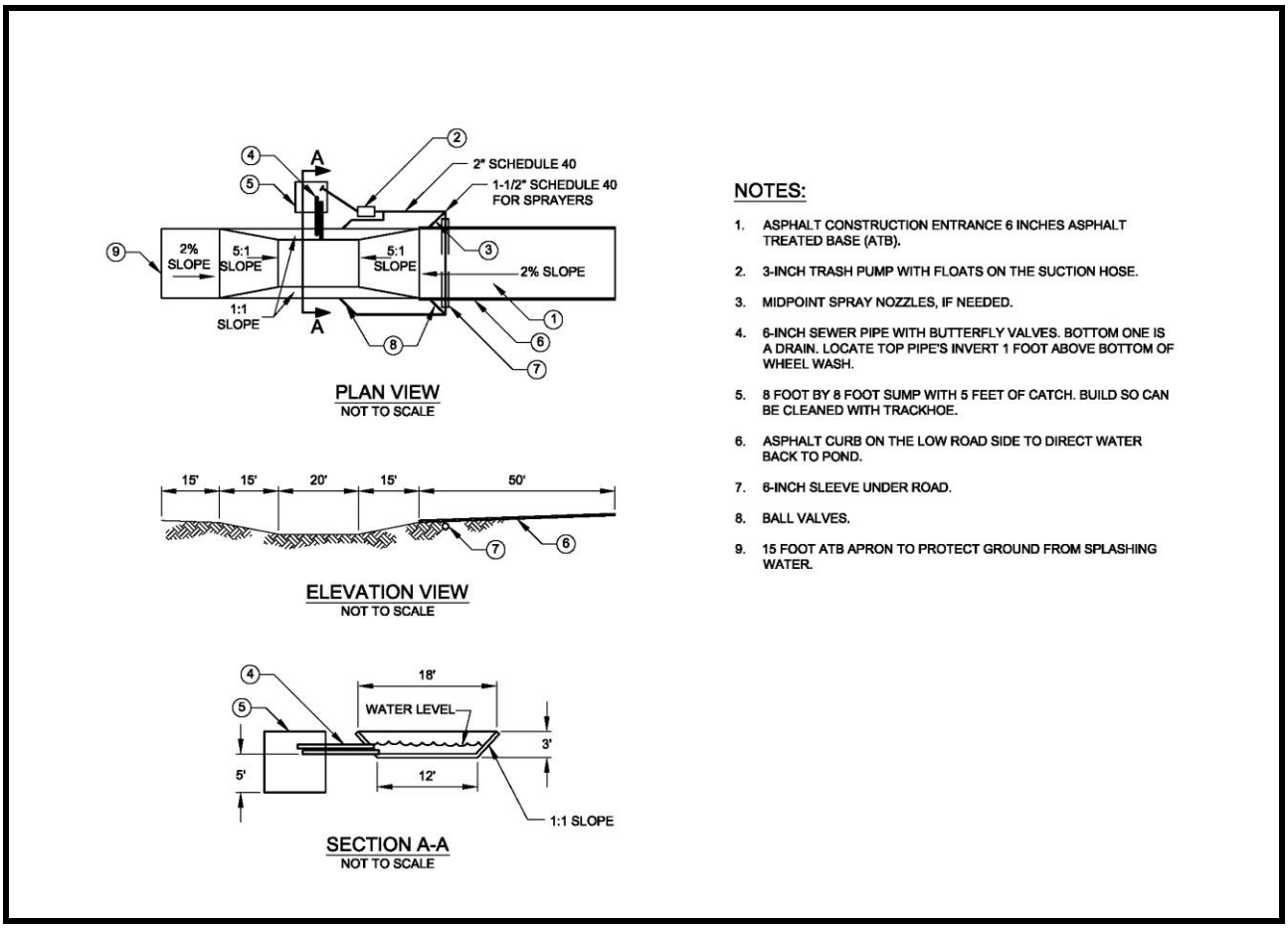

Figure 8. Tire Wash Details.

4.2.3.6. Maintenance

- The washwater should be changed a minimum of once per day. On large earthwork jobs where more than 10 to 20 trucks per hour are expected, the washwater will need to be changed more often.
- Wheel wash or tire bath wastewater shall be discharged to a separate onsite treatment system, that prevents discharge to receiving waters such as closed-loop recirculation or upland land application, or to the sanitary sewer with prior approval by King County.

4.2.4. BMP E2.20: Construction Road Stabilization

4.2.4.1. Description

The temporary stabilization with rock on access roads, subdivision roads, parking areas, and other onsite vehicle transportation routes immediately after grading.

4.2.4.2. Purpose

- To reduce erosion of temporary road beds by construction traffic during wet weather
- To reduce the erosion and therefore regrading of permanent road beds between the time of initial grading and final stabilization
- To minimize the amount of dirt tracked off site by vehicular traffic

4.2.4.3. Conditions Where Practice Applies

- Wherever rock-base roads or parking areas are constructed, whether permanent or temporary, for use by construction traffic.

4.2.4.4. Planning Considerations

Areas graded for construction vehicle transport and parking purposes are especially susceptible to erosion. The exposed soil surface is continually disturbed, leaving no opportunity for vegetative stabilization. Such areas also tend to collect and transport runoff waters along their surfaces. During wet weather, they often become muddy quagmires that generate significant quantities of sediment that may pollute nearby streams or be transported off site on the wheels of construction vehicles. Dirt roads can become so unstable during wet weather that they are virtually unusable.

Immediate stabilization of such areas with rock may cost money at the outset, but it may actually save money in the long run by increasing the usefulness of the road during wet weather.

Permanent roads and parking areas should be paved as soon as possible after grading. As an alternative, the early application of rock may solve potential erosion and stability problems and eliminate later regrading costs. Some of the rock will also probably remain in place for use as part of the final base course of the road.

4.2.4.5. Design Criteria

- Immediately after grading or the completion of utility installation within the right-of-way, apply a 6-inch course of 2- to 4-inch crushed rock, gravel base, or crushed surfacing base course. A 4-inch course of asphalt treated base (ATB) may be used in lieu of the crushed rock.
- Temporary roads should not exceed 15 percent, should minimize cuts in existing slopes, and be carefully graded to drain transversely. Provide drainage swales to carry flow to a sediment control BMP (*Section 4.3*).

- Protect installed inlets to prevent sediment-laden water entering the drain sewer system (refer to BMP E3.25).
- Maintain undisturbed buffer areas at all stream crossings.
- Seed, mulch, and/or cover areas adjacent to culvert crossings and steep slopes.
- Use dust control when necessary (refer to BMP E2.45).
- If the stabilized construction entrance does not adequately reduce the amount of tracked material, install one or more tire wash BMPs (refer to BMP E2.15).
- Install fencing to limit the access of vehicles to only those roads and parking areas that are stabilized.

4.2.4.6. Maintenance

- Inspect stabilized areas regularly, especially after large storm events. Add crushed rock if necessary and re-stabilize any areas found to be eroding.

4.2.5. BMP E2.35: Check Dams

4.2.5.1. Description

Small dams constructed across a swale or drainage ditch.

4.2.5.2. Purpose

To reduce the effective slope of the channel and, therefore, the velocity of concentrated flows; reduce erosion of the swale or ditch; and slow water velocity to allow retention of sediments.

4.2.5.3. Conditions Where Practice Applies

Where temporary channels or permanent channels are not yet vegetated, or channel lining is infeasible and, therefore, velocity checks are required. Check dams shall be placed at regular intervals within constructed channels that are cut down a slope.

4.2.5.4. Planning Considerations

The City's ECA regulations require protection for high flow refuge habitat for overwintering juvenile salmonids and emergent salmonid fry. Check dams cannot be placed below the expected backwater from any of these areas during specific times of the year. Refer to SMC 25.09 for site-specific requirements.

No check dams may be placed in streams (unless approved by the State Departments of Fisheries or Wildlife as appropriate). Other permits may also be necessary.

Check dams can be constructed of either rock or gravel filled sandbags. If rock check dams are used in grass-lined channels that will be mowed, care should be taken to remove all the rock from the channel when the dam is removed. This should include any rock that has washed downstream.

4.2.5.5. Design Criteria

- Check dams can be constructed of rock or pea-gravel filled bags. Where high velocity flow is not a concern, compost socks may be used. If necessary, compost socks may be stacked.
- Place check dams should perpendicular to the flow of water.
- The dam should form a triangle when viewed from the side. This prevents undercutting as water flows over the face of the dam rather than falling directly onto the ditch bottom.
- Before installing check dams, impound and bypass upstream water flow away from the work area. Options for bypassing include pumps, siphons, or temporary channels.
- Check dams in association with sumps work more effectively at slowing flow and retaining sediment than just a check dam alone. Provide a deep sump immediately upstream of the check dam.

- In some cases, if carefully located and designed, check dams can remain as permanent installations with very minor regrading. They may be left as either spillways, in which case accumulated sediment would be graded and seeded, or as check dams to prevent further sediment from leaving the site.
- Keep the maximum spacing between the dams such that the toe of the upstream dam is at the same elevation as the top of the downstream dam (Figure 9).

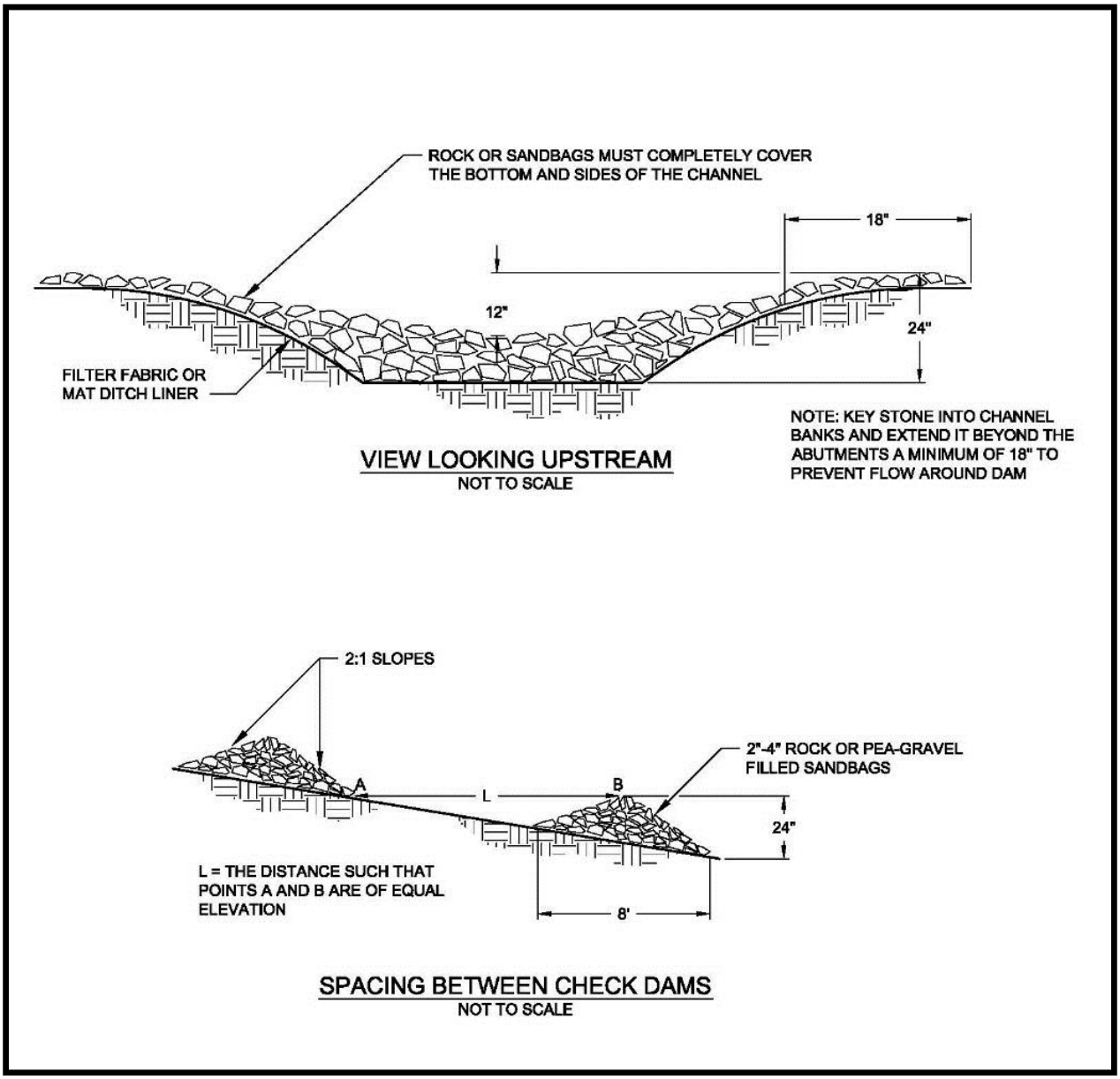

Figure 9. Check Dams.

- Keep the maximum height at 2 feet at the center of the dam.
- Keep the center of the check dam at least 12 inches lower than the outer edges at natural ground elevation.

- Keep the side slopes of the check dam at 2H:1V or flatter.
- Key the rock into the ditch banks and extend it beyond the abutments a minimum of 18 inches to avoid washouts from overflow around the dam.
- Rock check dams shall be constructed of appropriately sized rock. The rock used must be large enough to stay in place given the expected design flow through the channel. Place the rock by hand or by mechanical placement (no dumping of rock to form dam) to achieve complete coverage of the ditch or swale and to ensure that the center of the dam is lower than the edges.
- Use filter fabric foundation under a rock or sand bag check dam. If a mat ditch liner is used, this is not necessary. A piece of organic or synthetic mat cut to fit will also work for this purpose.
- In the case of grass-lined ditches and swales, remove check dams when the grass has matured sufficiently to protect the ditch or swale, unless the slope of the swale is greater than 4 percent. Immediately after dam removal, seed and mulch the area beneath the check dams.
- Ensure that channel appurtenances, such as culvert entrances below check dams, are not subject to damage or blockage from displaced rocks.

4.2.5.6. Maintenance

- Monitor check dams for performance and sediment accumulation during and after each runoff producing rainfall. Remove sediment when it reaches one-half the sump depth.
- If significant erosion occurs between dams, install a protective riprap liner in that portion of the channel.

4.2.6. BMP E2.40: Triangular Silt Dike (Geotextile-Encased Check Dam)

4.2.6.1. Description

A triangular dike made of urethane foam sewn into a woven geosynthetic fabric.

4.2.6.2. Purpose

Triangular silt dikes may be used as check dams, for perimeter protection, for temporary soil stockpile protection, for drop inlet protection, or as a temporary earth dike (Figure 10).

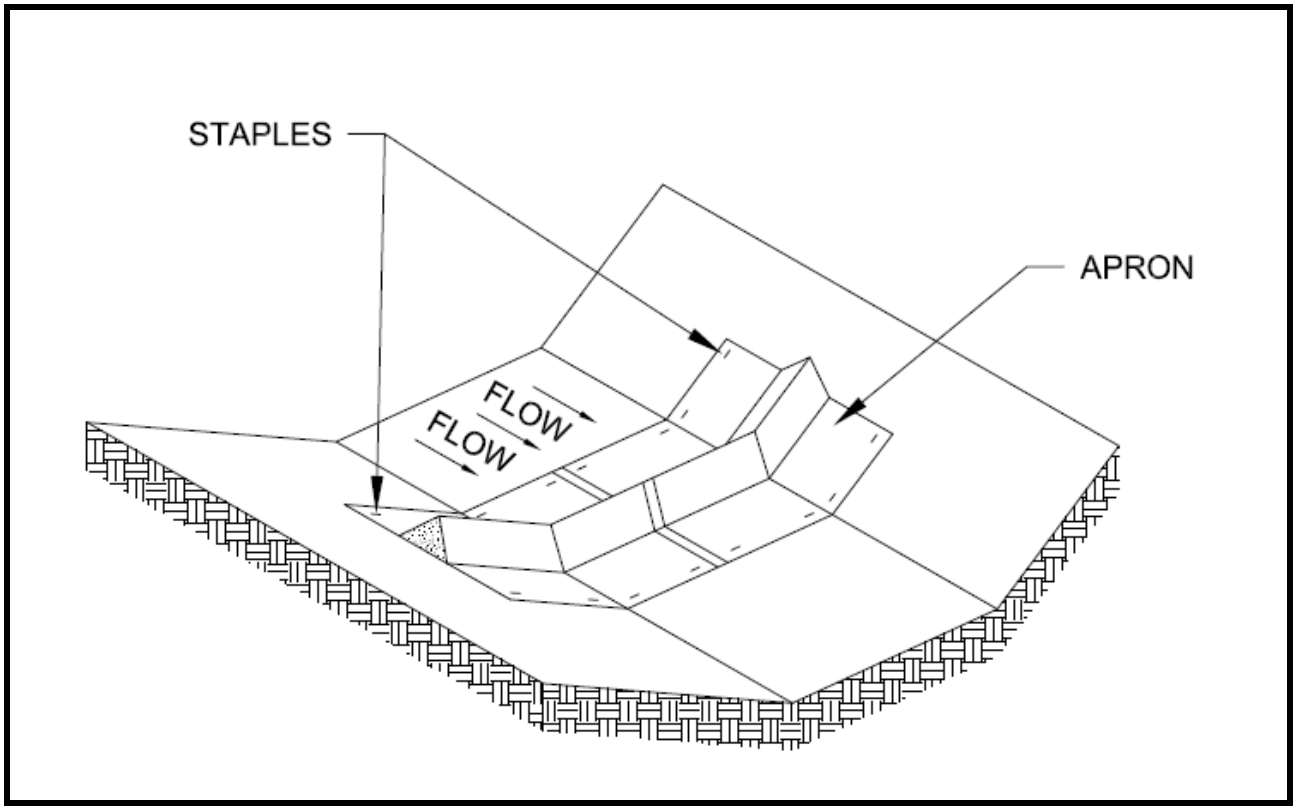

Figure 10. Triangular Silt Dike Cut Section.

4.2.6.3. Conditions Where Practice Applies

- May be used as temporary check dams in ditches of any dimension
- May be used on soil or pavement with adhesive or staples
- Triangular silt dikes have been used to build temporary:
    - Sediment ponds
    - Diversion ditches
    - Concrete wash out facilities
    - Curbing

- Water bars
- Level spreaders
- Berms

4.2.6.4. Planning Considerations

- Check dams should be located and installed as soon as construction will allow.
- Check dams should be placed perpendicular to the flow of water.
- Anticipate submergence and deposition above the triangular silt dam and erosion from high flows around the edges of the dam.

4.2.6.5. Design Criteria

This BMP is typically made of urethane foam sewn into a woven geosynthetic fabric. It is triangular, 10 inches to 14 inches high in the center, with a 20-inch to 28-inch base. A 2–foot apron extends beyond both sides of the triangle along its standard section of 7 feet. A sleeve at one end allows attachment of additional sections as needed.

- Install with ends curved up to prevent water from flowing around the ends.
- The fabric flaps and check dam units are attached to the ground with wire staples. Wire staples should be No. 11 gauge wire and should be 200 millimeters (mm) to 300 mm in length.
- When multiple units are installed, the sleeve of fabric at the end of the unit shall overlap the abutting unit and be stapled.
- When used as check dams, secure the leading edge with rocks, sandbags, or a small key slot and staples.

4.2.6.6. Maintenance

- Monitor triangular silt dams for performance and sediment accumulation during and after each runoff producing rainfall. Remove sediment when it reaches one-half the height of the dam.
- In the case of grass-lined ditches and swales, remove check dams and accumulated sediment when the grass has matured sufficiently to protect the ditch or swale, unless the slope of the swale is greater than 4 percent. Seed and mulch the area beneath the check dams immediately after dam removal.
- Immediately repair any damage or any undercutting of the dam.

4.2.7. BMP E2.45: Dust Control

4.2.7.1. Description

Reducing surface and air movement of dust during land disturbing, demolition, and construction activities.

4.2.7.2. Purpose

To prevent surface and air movement of dust from exposed soil surfaces onto roadways and into drainage channels and receiving waters (Figure 11).

Figure 11. Using a Water Truck for Dust Control.

4.2.7.3. Conditions Where Practice Applies

In areas (including roadways) subject to surface and air movement of dust where onsite and off-site damage is likely to occur if preventive measures are not taken.

4.2.7.4. Planning Considerations

Research at construction sites has established an average dust emission rate of 1.2 tons/acre/month for active construction.

Construction activities inevitably result in the exposure and disturbance of soil. Fugitive dust is emitted both during the activities (i.e., excavation, demolition, vehicle traffic, human activity) and as a result of wind erosion over the exposed earth surfaces. Large quantities of dust are typically generated by “heavy” construction activities, such as road and street construction and subdivision, commercial and industrial development, which involve disturbance of significant areas of soil surface. Earthmoving activities are the major source, but traffic and general disturbance of the soil also generate significant dust emissions.

In planning for dust control, remember that the less soil is exposed at any one time, the less potential there will be for dust generation. Therefore, phasing a project and utilizing

temporary stabilization practices upon the completion of grading can significantly reduce dust emissions. Also, limit traffic that will be on areas off the site roadways.

4.2.7.5. Design Criteria

- Minimize the period of soil exposure through use of temporary ground cover and other temporary stabilization practices (refer to Seeding and Mulching, BMPs E1.10 and E1.15, respectively).
- Construct natural or artificial windbreaks or windscreens. These may be designed as enclosures for small dust sources.
- Sprinkle the site with water until surface is wet. Repeat as needed. To prevent carryout of mud onto street, refer to Stabilized Construction Entrance (BMP E2.10) and Tire Wash (BMP E2.15).
- Spray exposed soil areas with approved dust palliative. Oil should not be used for dust suppression. Refer to *Appendix B* for information on chemical treatment.

4.2.7.6. Maintenance

- Respray area as necessary to keep dust to a minimum.

4.2.8. Permanent Erosion Control BMPs

Permanent erosion control BMPs are implemented both during and upon completion of construction activities. Permanent erosion control reduces erosion wherever practicable and can be achieved primarily by minimizing erosion by installing permanent stabilizing structures and/or materials to new construction or existing sites. For example, by adding gradient terraces to an existing or newly constructed slope, erosion will be significantly reduced by creating a set of ridges and channels that intercept runoff and direct it to a controlled outlet. The benefit is that rill and gully formation will be minimized and toe of slope erosion will decrease as a result. Another benefit of permanent erosion control is that some of the following BMPs include using vegetation which may be incorporated into permanent cover BMPs described in *Section 4.1.5*.

Permanent erosion control BMPs should be designed by an engineer and may have additional criteria for flow control and water quality treatment requirements. Refer to *Volume 3 - Project Stormwater Control*.

The standards and specifications for permanent erosion control BMPs include:

- Channel Lining - refer to DOE BMP C202
- Gradient Terracing – refer to DOE BMP C131

4.2.9. Temporary or Permanent Erosion Control BMPs

There is a subset of erosion control BMPs that may be used as temporary controls during construction, then remain as a permanent erosion control measure. For example, an earth dike and drainage swale would provide siltation control during construction, and remain as permanent protection of downstream properties after construction.

Temporary measures that may also remain as a permanent erosion control are typically implemented during construction activities.

The BMPs in this section include:

- BMP E2.70: Subsurface Drains (*Section 4.2.10*)
- BMP E2.80: Earth Dike and Drainage Swale (*Section 4.2.11*)
- BMP E2.95: Turbidity Curtain (*Section 4.2.12*)
- Outlet Protection – refer to *Appendix E*
- Pipe Slope Drains – refer to *Appendix E*
- Surface Roughening – refer to DOE BMP C130
- Grass-lined Channels – refer to DOE BMP C201

The requirements for maintaining permanent BMPs are included with each description; however, all temporary and permanent erosion and sediment control practices shall be maintained and repaired as needed to assure continued performance of their intended function.

4.2.10. BMP E2.70: Subsurface Drains

4.2.10.1. Description

A perforated conduit such as a pipe, tubing, or tile installed beneath the ground to intercept and convey groundwater.

4.2.10.2. Purpose

To provide a dewatering mechanism for draining excessively wet, sloping soils—usually consisting of an underground-perforated pipe that will intercept and convey groundwater.

4.2.10.3. Conditions When Practice Applies

- Wherever excessive water must be removed from the soil. The soil must be deep and permeable enough to allow an effective system to be installed. This standard does not apply to subsurface drains for building foundations or deep excavations.

4.2.10.4. Planning Considerations

Subsurface drainage systems are of two types; relief drains and interceptor drains. Relief drains are used either to lower the water table in order to improve the growth of vegetation, or to remove ponded water. They are installed along a slope and drain in the direction of the slope. They can be installed in a gridiron pattern, a herringbone pattern, or a random pattern.

Interceptor drains are used to remove water as it seeps down a slope to prevent the soil from becoming saturated and subject to slippage. They are installed across a slope and drain to the side of the slope. They usually consist of a single pipe or series of single pipes instead of a patterned layout.

4.2.10.5. Design Criteria

- Temporary measures that may also remain as a permanent erosion control are typically implemented during construction activities. The depth of an interceptor drain is determined primarily by the depth to which the water table is to be lowered or the depth to a confining layer. For practical reasons, the maximum depth is usually limited to 6 feet, with a minimum cover of 2 feet to protect the conduit.

- The soil should have depth and sufficient permeability to permit installation of an effective drainage system at a depth of 2 to 6 feet.

- An adequate outlet for the drainage system must be available either by gravity or by pumping.

- The quantity and quality of discharge needs to consider the ultimate receiving water (additional detention may be required).

- The capacity of an interceptor drain is determined by calculating the maximum rate of groundwater flow to be intercepted. Therefore, it is good practice to make completed subsurface investigations, including hydraulic conductivity of the soil, before designing a subsurface drainage system.

- Subsurface drains are sized for the required capacity without pressure flow. The minimum diameter for a subsurface drain is 4 inches.
- The minimum velocity required to prevent silting is 1.4 feet per second (ft/sec). Grade the line to achieve at least this velocity. The maximum allowable velocity using a sand-gravel filter or envelope is 9 ft/sec.
- Use filter material and fabric around all drains for proper bedding and filtration of fine materials. Envelopes and filters should surround the drain to a minimum of 3-inch thickness.
- Install the outlet of the subsurface drain such that it empties into a sediment trap or pond. If free of sediment, it can empty into a receiving water, swale, or stable vegetated area adequately protected from erosion and undermining.
- The strength and durability of the pipe must meet the requirements of the site in accordance with the manufacturer's specifications.
- Secure an animal guard to the outlet end of the pipe to keep out rodents.
- Use outlet pipe of corrugated metal, cast iron, or heavy-duty plastic without perforations and at least 10 feet long. Do not use an envelope or filter material around the outlet pipe, and bury at least two-thirds of the pipe length.
- When outlet velocities exceed those allowable for the receiving water, provide outlet protection.

Construction Specifications

- Construct the trench on a continuous grade with no reverse grades or low spots.
- Stabilize soft or yielding soils under the drain with gravel or other suitable material.
- Do not use deformed, warped, or otherwise unsuitable pipe.
- Place filter material as specified with at least 3 inches of material on all sides of the pipe.
- Backfill immediately after placement of the pipe. Do not allow sections of pipe to remain uncovered overnight or during a rainstorm. Place backfill material in the trench in such a manner that the drainpipe is not displaced or damaged.

4.2.10.6. Maintenance

- Periodically check subsurface drains to ensure that they are free-flowing and not clogged with sediment.
- Keep the outlet clean and free of debris.
- Keep surface inlets open and free of sediment and other debris.

- Trees located too close to a subsurface drain often clog the system with their roots. If a drain becomes clogged, relocate the drain to minimize this problem. As a last resort, the trees may need to be removed. Tree removal may require prior approval by DPD and SDOT.
- Where heavy vehicles cross drains, check the line to ensure that it is not crushed.

4.2.11. BMP E2.80: Earth Dike and Drainage Swale

4.2.11.1. Description

A ridge of compacted soil or a swale with vegetative lining located at the top or base of a sloping disturbed area.

4.2.11.2. Purpose

To intercept storm runoff from drainage areas above unprotected slopes and direct it to a stabilized outlet.

4.2.11.3. Conditions Where Practice Applies

Where the volume and velocity of runoff from exposed or disturbed slopes must be reduced. When an earth dike/drainage swale is placed above a disturbed slope, it reduces the volume of water reaching the disturbed area by intercepting runoff from above (Figure 12). When it is placed horizontally across a disturbed slope, it reduces the velocity of runoff flowing down the slope by reducing the distance that the runoff can flow directly downhill.

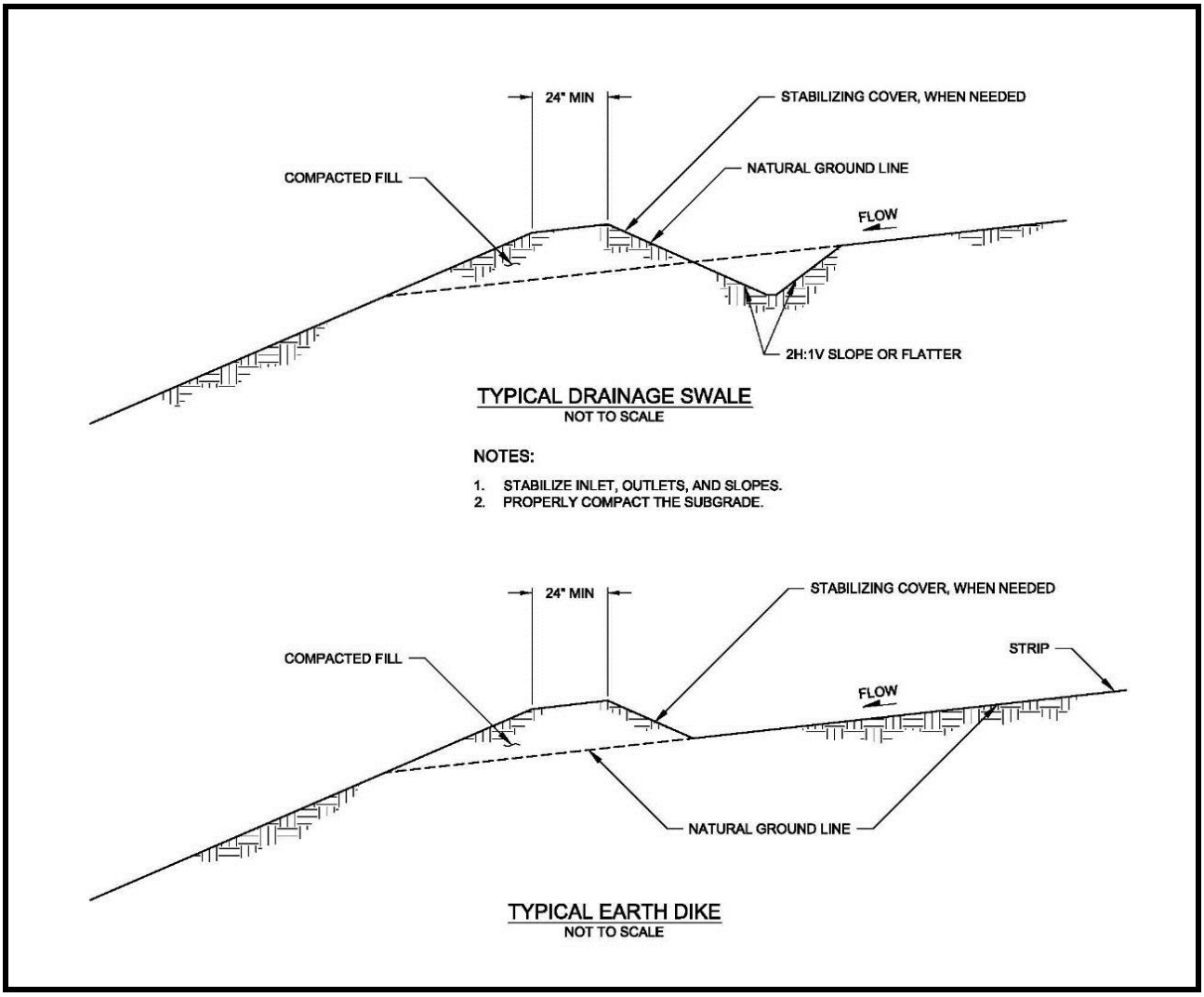

Figure 12. Earth Dike and Drainage Swale.

4.2.11.4. Planning Considerations

A temporary diversion dike or swale is intended to divert overland sheet flow to a stabilized outlet or a sediment trapping facility during establishment of permanent stabilization on a sloping disturbed area. When used at the top of a slope, the structure protects exposed slopes by keeping upland runoff away. When used at the base of a slope, the structure protects adjacent and downstream areas by diverting sediment-laden runoff to a sediment trapping facility.

If the dike or swale is going to remain in place for longer than 15 days, it must be stabilized with temporary or permanent vegetation. The slope behind the dike or swale is also an important consideration. The dike or swale must have a positive grade to assure drainage, but if the slope is too great, precautions including channel protection and check dams must be taken to prevent erosion due to high velocity of flow.

This practice is considered an economical one because it uses material available on the site and can usually be constructed with equipment needed for site grading. Stabilizing the dike or swale with vegetation can extend the useful life of the BMP.

4.2.11.5. Design Criteria

- Temporary measures that may also remain as permanent erosion control are typically implemented during construction activities. Review construction for areas where overtopping may occur.
- Sub-basin tributary area should be one acre or less.
- Earth dikes must meet the criteria in Table 6.
- Drainage swales must meet the criteria in Table 7.
- An 8- or 12-inch diameter compost sock may also be used.

4.2.11.6. Maintenance

- Inspect the measure after every major storm and make repairs as necessary. Repair damage caused by construction traffic or other activity before the end of each working day.

Table 6. Design Criteria for Earth Dike.

Feature	Requirement
Top Width	2 foot minimum
Height	18 inch minimum measured from upslope toe and at a compaction of 90 percent ASTM D698 standard proctor
Side Slopes	25 percent or flatter
Grade	Topography dependent, except that dike shall be limited to grades between 0.5 and 1.0 percent
Horizontal Spacing of Earth Dikes	• Slopes less than 5 percent = 300 feet • Slopes 5-10 percent = 200 feet • Slopes 10-40 percent = 100 feet
Stabilization	• Slopes = less than 5 percent. Seed and mulched construction (refer to BMPs E1.10 and E1.15) • Slopes = 5 to 40 percent. Dependent on runoff velocities and dike materials • Stabilization should be done immediately using either sod or riprap to avoid erosion
Outlet	The upslope side of the dike shall provide positive drainage to the dike outlet. No erosion shall occur at the outlet. Provide energy dissipation measures as necessary. Sediment-laden runoff must be released through a sediment trapping facility.
Other	Minimize construction traffic over temporary dikes

Table 7. Design Criteria for Drainage Swale.

Feature	Requirement
Bottom Width	2 foot minimum. Bottom shall be level.
Depth	1 foot min.
Side Slopes	25 percent or flatter
Grade	5 percent maximum with positive drainage to suitable outlet such as a sediment trap.
Stabilization	Seed as per BMP E1.10 temporary seeding or DOE BMP C130. Riprap 12 inches thick pressed into bank and extending at least 8 inches vertical from the bottom.
Stabilization	Slope of disturbed area: Less than 5 percent = 300 feet 5-10 percent = 200 feet 10-40 percent = 100 feet
Outlet	Level spreader or riprap to stabilized outlet/sedimentation pond.

4.2.12. BMP E2.95 Turbidity Curtain

4.2.12.1. Description

A turbidity curtain is a plastic or other appropriate barrier used to isolate the near shore work area. The barriers are intended to confine the suspended sediment.

4.2.12.2. Purpose

The curtain is a floating barrier, and thus does not prevent water from entering the isolated area; rather, it prevents suspended sediment from getting out.

4.2.12.3. Conditions Where Practice Applies

Turbidity curtains are used when construction activities adjoin quiescent waters (e.g., lakes, ponds, and slow flowing creeks) where sediment discharge to the receiving water is unavoidable. The curtain is designed to deflect and contain sediment within a limited area and provide sufficient retention time so that the sediment particles will fall out of suspension.

4.2.12.4. Planning Considerations

Turbidity curtains should not be used in flowing water; they are best suited for use in ponds, lakes, and very slow-moving creeks.

In wave and/or tidal conditions, the curtain should extend to a depth that does not stir up sediment by hitting the bottom repeatedly. If it is desirable for the curtain to reach the bottom in an active-water situation, a pervious filter fabric may be used for the bottom 1 foot.

Turbidity curtains should not be placed across the width of a channel.

Consider the removal procedure carefully. If may create more of a sediment problem through re-suspension of the particles or by accidental dumping of material.

4.2.12.5. Design Criteria

Orient turbidity curtains parallel to the direction of flow and extend the entire depth of the watercourse in calm-water situations.

The top of the curtain should consist of flexible flotation buoys, and the bottom should be held down by a load line incorporated into the curtain fabric. The fabric should be a brightly colored impervious mesh.

Place one anchor at least every 100 feet, or as needed, then tow the fabric out in a furled condition, and connect to the anchors using the flotation devices. Do not connect anchors to the bottom of the curtain. Once in place, cut the furling lines and allow the bottom of the curtain to sink.

Allow particles to settle for a minimum of 6 to 12 hours prior to their removal or prior to removal of the turbidity curtain.

4.2.12.6. Maintenance

Inspect the curtain for holes or other problems, and promptly make any repairs needed.

After removing sediment, allow remaining suspended particles to settle for 6 to 12 hours before removing the sediment curtain.

To remove, install furling lines along the curtain, detach from anchors, and tow out of the water.

4.3. Sediment Control Practices

Sediment retention practices for construction activities are temporary controls only. Permanent sediment retention requires a separate process for flow control and treatment facilities as outlined in *Volume 3, Project Stormwater Control*.

Temporary sediment retention BMPs are described in the sections below and include:

- BMP E3.10: Filter Fence (*Section 4.3.1*)
- BMP E3.20: Gravel Filter Berm (*Section 4.3.2*)
- BMP E3.25: Storm Drain Inlet Protection (*Section 4.3.3*)
- BMP E3.30: Vegetated Strip (*Section 4.3.4*)
- BMP E3.35: Straw Wattles, Compost Socks, and Compost Berms (*Section 4.3.5*)
- BMP E3.40: Sediment Trap (*Section 4.3.6*)
- BMP E3.50: Portable Sediment Tank (*Section 4.3.7*)
- BMP E3.60: Construction Stormwater Filtration (*Section 4.3.8*)
- BMP E3.65: Cleaning Inlets and Catch Basins (*Section 4.3.9*)
- BMP E3.70: Street Sweeping and Vacuuming (*Section 4.3.10*)
- Brush Barrier – refer to DOE BMP C231
- Temporary Sediment Pond (or basin) – refer to DOE BMP C241
- Construction Stormwater Chemical Treatment – refer to DOE BMP C250

The requirements for maintaining these BMPs are included with each description. All temporary sediment retention practices shall be maintained and repaired as needed to ensure continued performance of their intended function.

Temporary BMPs must be removed within 5 business days after final site stabilization is achieved, or after they are no longer needed, whichever is later. In either case, trapped sediment must be removed or stabilized on site and the disturbed areas permanently stabilized.

4.3.1. BMP E3.10: Filter Fence

4.3.1.1. Description

A temporary sediment barrier consisting of a filter fabric stretched across and attached to supporting posts and entrenched. The filter fence is constructed of stakes and synthetic filter fabric with a rigid wire fence backing where necessary for support.

4.3.1.2. Purpose

Filter fence is used during construction operations to intercept and detain small amounts of sediment under sheet flow conditions from disturbed areas in order to prevent sediment from leaving the site, and to decrease the velocity of sheet flows (Figure 13).

Figure 13. Filter Fence Installed on a Slope.

4.3.1.3. Conditions Where Practice Applies

Filter fence may be used downslope of all disturbed areas and must be provided just upstream of the point(s) of runoff discharge from a site, before the flow becomes concentrated. They may also be used below disturbed areas where runoff may occur in the form of sheet and rill erosion, wherever runoff has the potential to impact downstream resources.

4.3.1.4. Planning Considerations

Laboratory work at the Virginia Highway and Transportation Research Council has shown that filter fence can trap a much higher percentage of suspended sediments than can straw bales, which have been disallowed by Ecology. The fence must be properly installed to fully function. The installation methods outlined here can improve performance.

4.3.1.5. Design Criteria

- Refer to Figure 14 for design details.
    - The drainage area must be 1 acre or less. On larger sites, the fence must be used in combination with sediment basin(s).
    - Maximum slope steepness on the site (perpendicular to fence line) is 45 percent.
    - Maximum sheet or overland flow path length to the fence is 100 feet.
    - Concentrated flows must not be greater than 0.5 cubic feet per second (cfs).
    - Selection of a filter fabric is based on soil conditions at the construction site. Soil conditions affect the apparent opening size (AOS) fabric specification. Soils also affect the characteristics of the support fence, which depend on the choice of tensile strength. The designer shall specify a filter fabric that retains the soil found on the construction site, yet will have openings large enough to permit drainage and prevent clogging.
    - The material used in a filter fabric fence must have sufficient strength to withstand various stress conditions. The ability to pass flow through must be balanced with the material's ability to trap sediments.
    - Support non-woven and regular strength slit film fabrics with wire mesh, chicken wire, 2-inch x 2-inch wire, safety fence, or jute mesh to increase the strength of the fabric. Silt fence materials are available that have synthetic mesh backing attached.
    - Filter fabric material must contain ultraviolet ray inhibitors and stabilizers to provide a minimum of 6 months of expected usable construction life at a temperature range of 0°F to 120°F.
    - One hundred percent biodegradable silt fence is available that is strong, long lasting, and can be left in place after the project is completed.
- Selection of the AOS (refer to Table 8).
- The following design criteria must be used with a Large Project Construction Stormwater Control Plan (*Section 2.1.2*):
    - Purchase filter fabric in a continuous roll cut to the length of the barrier to avoid use of joints. When joints are necessary, splice filter cloth together only at a support post, with a minimum 6-inch overlap. Securely fasten both ends to the post.

- Space posts a maximum of 6 feet apart and drive securely into the ground a minimum of 30 inches (where physically possible).

Table 8. Geotextile Standards.

Geotextile Property	Test Method	Geotextile Property Requirements
Polymeric Mesh AOS	ASTM D4751	0.60 mm max. for slit film woven (#30 sieve) 0.30 mm max. for all other geotextile types (#50 sieve) 0.15 mm min. for all fabric types (#100 sieve)
Water Permittivity	ASTM D4491	0.02 sec^{-1} min.
Grab Tensile Strength	ASTM D4632	180 lbs. min. for extra strength fabric 100 lbs min. for standard strength fabric
Grab Tensile Strength	ASTM D4632	30% max.
Ultraviolet Resistance	ASTM D4355	70% min.

- Excavate a trench approximately 8 inches wide and 12 inches deep along the line of posts and upslope from the barrier. Construct the trench to follow the contour.
  - When slit film filter fabric is used, fasten a wire mesh support fence securely to the upslope side of the posts using heavy-duty wire staples at least 1 inch long, tie wires, or hog rings. Extend the wire into the trench a minimum of 4 inches and not more than 36 inches above the original ground surface.
  - Wire slit film filter fabric to the fence. Extend 20 inches of the fabric into the trench. Extend the fabric not more than 36 inches above the original ground surface. Filter fabric shall not be stapled to existing trees. Other types of fabric may be stapled to the fence.
  - When extra-strength or monofilament fabric and closer post spacing are used, the wire mesh support fence may be eliminated. In such a case, staple or wire the filter fabric directly to the posts. Use extra care when joining or overlapping these stiffer fabrics.
  - Use properly compacted native material. This is the preferred alternative because the soil forms a more continuous contact with the trench below, and use of native materials cuts down on the number of trips that must be made on and off-site.
  - Remove filter fabric fences when they have served their useful purpose, but not before the upslope area has been permanently stabilized. Remove retained sediment and properly dispose of, or mulch and seed.

4.3.1.6. Maintenance

- Inspect immediately after each rainfall, and at least daily during prolonged rainfall. Repair as necessary.
- Remove sediment when it reaches approximately one-third the height of the fence.
- Spread any sediment deposits remaining in place after the filter fence is no longer required to conform to the existing grade, prepare and seed.

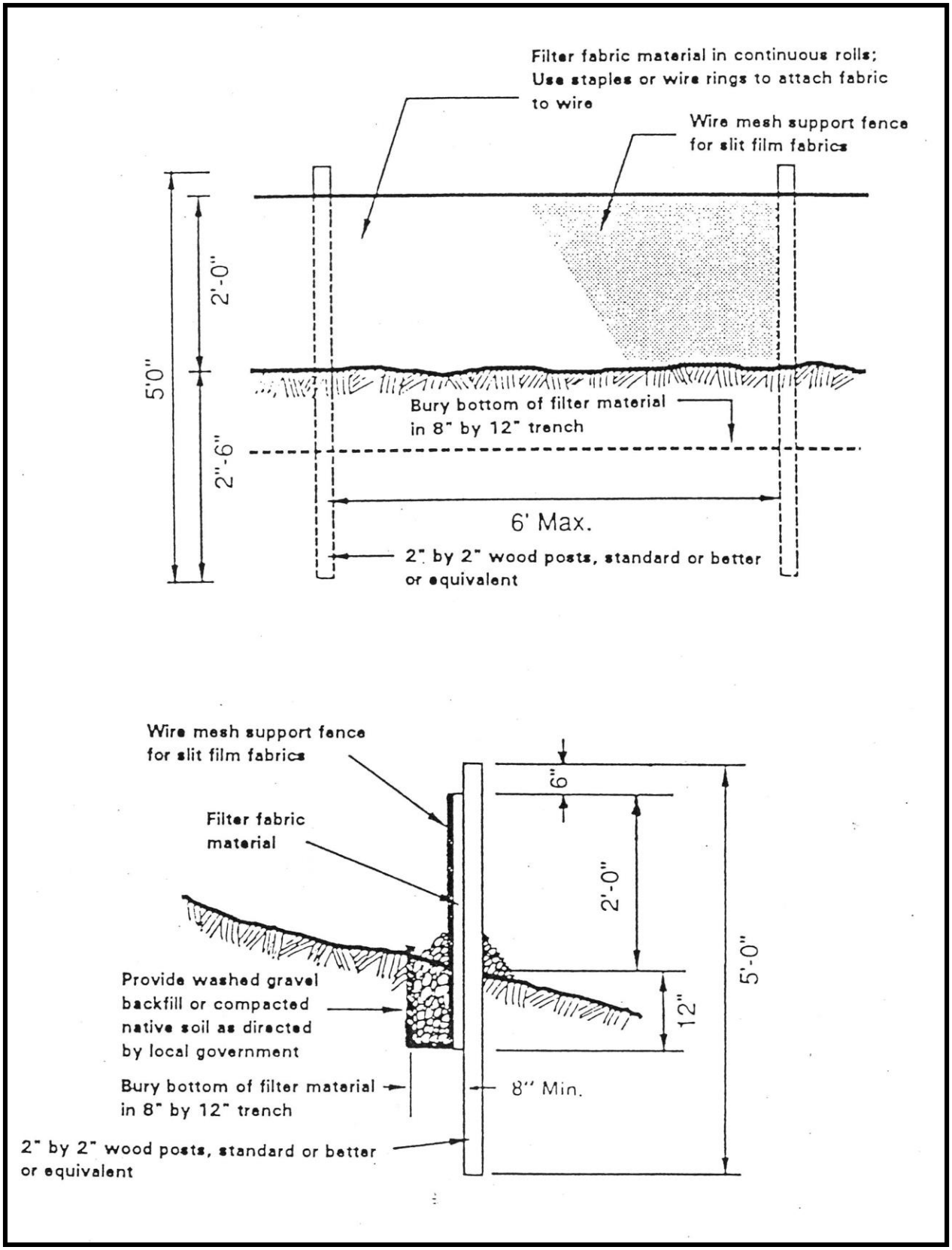

Figure 14. Silt Fence Details.

4.3.1.7. Maintenance Standards

- Repair any damage immediately.
- Intercept and convey all evident concentrated flows uphill of the silt fence to a sediment pond.
- Check the uphill side of the fence for signs of the fence clogging and acting as a barrier to flow, and causing channelization of flows parallel to the fence. If this occurs, replace the fence or remove the trapped sediment.
- Replace filter fabric that has deteriorated due to ultraviolet breakdown.

4.3.2. BMP E3.20: Gravel Filter Berm

4.3.2.1. Description

A raised gravel berm or mound constructed in traffic areas.

4.3.2.2. Purpose

To keep sediment away from traffic areas by filtering runoff through gravel or crushed rock.

4.3.2.3. Conditions Where Practice Applies

- On private property only. This BMP is not allowed in the public right-of-way.
- Where a temporary measure is needed to retain sediment from traffic areas within the project site.

4.3.2.4. Design Criteria

- Berm material shall be 3/4 to 3 inches in size, washed, well-graded gravel or crushed rock with less than 5 percent fines.
- Spacing of berms, perpendicular to the flow of traffic:
    - Every 300 feet on slopes less than 5 percent
    - Every 200 feet on slopes between 5 and 10 percent
    - Every 100 feet on slopes greater than 10 percent
- Berm dimensions:
    - 1 foot high with 18 percent side slopes
    - 8 linear feet per 1 cfs runoff based on the 10-year, 24-hour design storm

4.3.2.5. Maintenance

- Inspect regularly. Remove sediment and replace filter material when it becomes clogged.

4.3.3. BMP E3.25: Storm Drain Inlet Protection

4.3.3.1. Description

A sediment filter or an excavated impounding area around a storm drain or catch basin.

4.3.3.2. Purpose

To prevent sediment from entering storm drainage systems prior to permanent stabilization of the disturbed area.

4.3.3.3. Conditions Where Practice Applies

Conditions include when storm drain inlets are operational prior to permanent stabilization of the disturbed drainage area. Protection should be provided for all storm drain inlets downslope, and within 500 feet or a block, whichever is further, of a disturbed or construction area, unless the runoff that enters the catch basin will be conveyed to a sediment pond or trap.

Drainage areas should be limited to 1 acre or less. Emergency overflows may be required where stormwater ponding would cause a hazard. If an emergency overflow is provided, additional end-of-pipe treatment may be required. Different types of structures are applicable to different conditions:

- **Structures less than 12 inches deep** – use other methods to protect the inlet (BMP E3.70 Street Sweeping and Vacuuming).
- **Storm drain or catch basin filter sock** – applicable on private properties or the public right-of-way, for structures greater than 12 inches deep.
- **Block and Gravel Curb Inlet Protection** – applicable for private properties only, on a paved surface. Sturdy, but limited filtration. Consists of a barrier formed around an inlet with concrete blocks and gravel (Figure 15).
- **Curb and Gutter Barrier** – applicable for private properties only, using a sandbag or rock berm (riprap and aggregate) 3 feet high and 3 feet wide in a horseshoe shape (Figure 16). An 8- or 12-inch diameter compost sock may also be used in temporary, low-velocity applications.

4.3.3.4. Planning Considerations

- Clean out the stormwater drain or catch basin prior to implementing this BMP (refer to BMP E3.65 Cleaning Inlets and Catch Basins).
- Remove BMP within 5 business days after final site stabilization is achieved, or after it is no longer needed, whichever is longer.
- All methods for storm drain inlet protection are prone to plugging and require a high frequency of maintenance.

Plan View

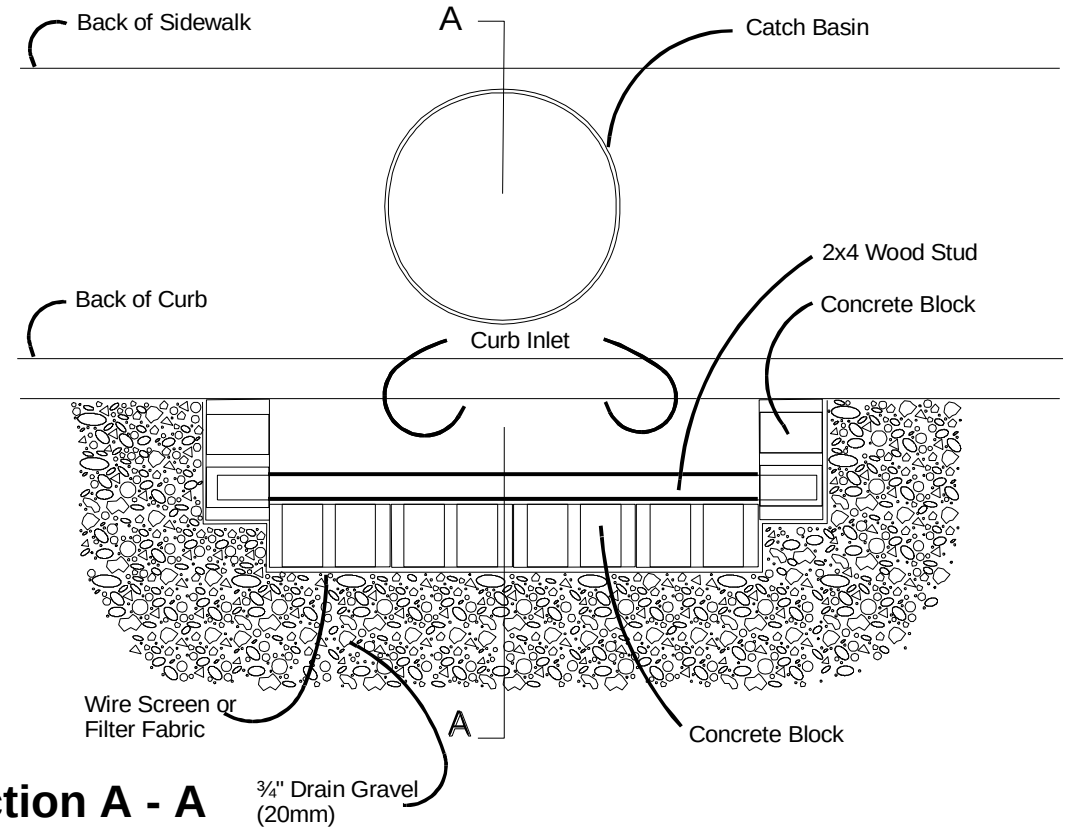

Section A - A

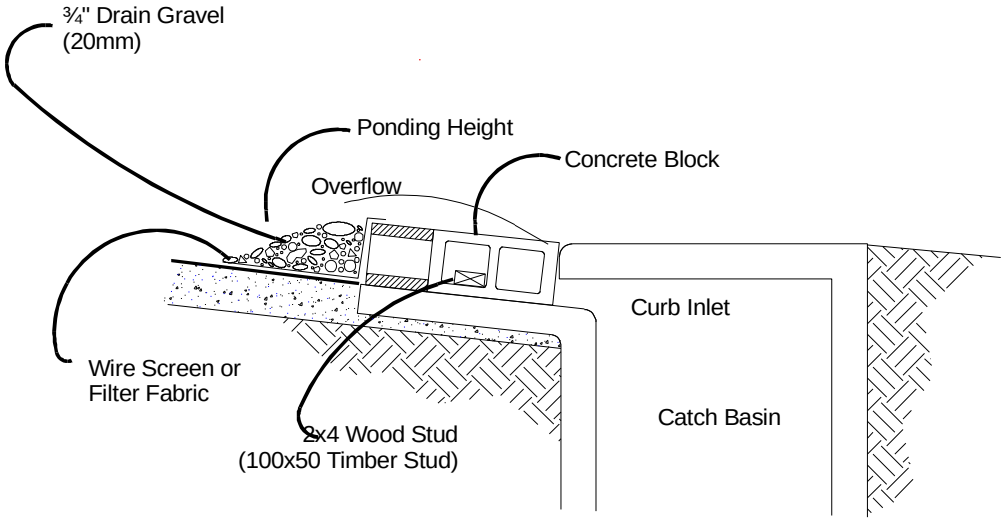

NOTES:
1. Use block and gravel type sediment barrier when curb inlet is located in gently sloping street segment, where water can pond and allow sediment to separate from runoff.
2. Barrier shall allow for overflow from severe storm event.
3. Inspect barriers and remove sediment after each storm event. Sediment and gravel must be removed from the traveled way immediately.

Figure 15. Block and Gravel Curb Inlet Protection.

Figure 16. Curb and Gutter Barrier.

- Storm drains made operational before their drainage area is stabilized can convey large amounts of sediment to natural drainage channels. In cases of extreme sediment loading, the storm drain itself may clog and lose a major portion of its capacity. To avoid these problems, it is necessary to prevent sediment from entering the system at the inlets.
- Several types of inlet filters and traps have different applications that depend on site conditions and type of inlet. Other innovative techniques for accomplishing the same purpose are encouraged, but only after specific plans and details are submitted to and approved by the DPD. Note that these various inlet protection devices are for drainage areas of less than 1 acre. Runoff from larger disturbed areas should be routed through a Temporary Sediment Trap or Pond (refer to DOE BMP C241 and E3.50).
- The best way to prevent sediment from entering the storm drain is to stabilize the site as quickly as possible, preventing erosion and stopping sediment at its source.

4.3.3.5. Design Criteria

- Secure grates and spaces of all inlets to prevent seepage of sediment-laden water.
- All catch basin protection measures should include sediment sumps of 1 to 2 feet in depth with 25 percent side slopes.
- Installation procedure for drain or catch basin filter sock:
    - For structures greater than 12 inches deep, the filter sock can be laid into the inlet as long as the overflow opening is in the direction of the outlet pipe.
    - Trim and remove filter sock material that extends beyond the grate.
    - Make provisions to decant accumulated sediment.
    - Install a high-flow bypass that will not clog under normal use at a construction site.
- Installation procedure for block and gravel curb inlet protection:
    - Place two concrete blocks on their sides abutting the curb at either side of the inlet opening. These are spacer blocks.
    - Place a piece of lumber through the outer holes of each spacer block to align the front blocks.
    - Place blocks on their sides across the front of the inlet and abutting the spacer blocks.
    - Place wire mesh with 1/2-inch openings over the outside vertical face.
    - Pile coarse aggregate against the wire to the top of the barrier.

- Installation procedure for curb and gutter sediment barrier:
    - Construct a horseshoe shaped berm.
    - Create a face with coarse aggregate if using riprap, 3 feet high and 3 feet wide, at least 2 feet from the inlet.

4.3.3.6. Maintenance

- Inspections should be made on a regular basis, especially after large storm events. Inlet protection devices shall be cleaned or removed and replaced when sediment has filled one-third of the available storage (unless a different standard is specified by the product manufacturer.
- Do not wash sediment into storm drains while cleaning. Spread all excavated material evenly over the surrounding land area or stockpile and stabilize as appropriate.

4.3.4. BMP E3.30: Vegetated Strip

4.3.4.1. Description

A vegetated area located downslope of a disturbed area that is capable of filtering coarse sediment from runoff and slowing runoff velocities.

4.3.4.2. Purpose

Vegetated strips reduce the transport of coarse sediment from a construction site by providing a temporary physical barrier to sediment and reducing the runoff velocities of overland flow.

4.3.4.3. Conditions Where Practice Applies

- Vegetated strips may be used downslope of all disturbed areas, placed parallel to the toe of slope.
- Vegetated strips are not intended to treat concentrated flows, nor are they intended to treat substantial amounts of overland flow. Any concentrated flows must be conveyed through the drainage system to a sediment pond. The only circumstance in which overland flow can be treated solely by a strip, rather than by a sediment pond, is when the following strip flow path length can be achieved with the associated average slope (Table 9).

Table 9. Vegetated Strip Implementation Criteria.

Maximum Average Downslope (percent)	Minimum Vegetated Strip Flow Path Length (feet)
33	100
25	115
14	150
9	200
5	250

4.3.4.4. Design Criteria

- The vegetated strip must consist of a minimum of a 25-foot wide continuous strip of dense vegetation with permeable topsoil. Grass covered, landscaped areas are generally not adequate because the volume of sediment overwhelms the grass. Ideally, vegetated strips should consist of undisturbed native growth with a well-developed soil that allows for infiltration of runoff.
- The slope within the strip must not exceed 14 percent.
- Delineate the uphill boundary of the vegetated strip with clearing limits.

4.3.4.5. Maintenance

- Immediately seed and mulch any areas damaged by erosion or construction activity.

- Install sod if more than 5 feet of the original vegetated strip width has had vegetation removed or is being eroded.
- If there are indications that concentrated flows are traveling across the buffer, install stormwater controls to reduce the flows entering the buffer, or install additional perimeter protection.

4.3.5. BMP E3.35: Straw Wattles, Compost Socks, and Compost Berms

4.3.5.1. Description

Temporary erosion and sediment control barriers consisting of encased straw, encased compost or a compost berm.

Straw wattles consist of straw that is wrapped in biodegradable tubular plastic or similar encasing material. Straw wattles are typically 8 to 10 inches in diameter and 25 to 30 feet in length. The wattles are placed in shallow trenches and staked along the contour of disturbed or newly constructed slopes (Figure 17). Compost socks are a similar net tube (available in biodegradable mesh, or non-biodegradable mesh for installations longer than 6 months) filled with compost. Compost berms are triangular cross-section rows of compost that can serve a similar function as wattles or socks. Compost socks and berms typically do not require trenching.

Figure 17. Straw Wattles or Compost Sock for Inlet Protection.

4.3.5.2. Purpose

They reduce the velocity, can spread the flow of rill and sheet runoff, and can capture and retain sediment.

4.3.5.3. Conditions Where Practice Applies

- Disturbed areas that require immediate erosion protection.

- Exposed soils during short construction delays, or over winter months.
- On slopes requiring stabilization until permanent vegetation can be established.
- For inlet protection or elsewhere on top of pavement to filter or direct flow.
- As an alternative to silt fence for perimeter control.

4.3.5.4. Planning Considerations

- Compost socks and straw wattles are effective for 1 to 2 seasons. Berms are effective for 1 to 2 weeks, or longer if vegetated and/or protected by fencing.
- If conditions are appropriate, straw wattles and compost socks can be staked to the ground using willow cuttings for added revegetation. Compost socks can also be filled with a compost/seed mix to provide temporary or permanent vegetation. Use biodegradable socks for permanent installations.

4.3.5.5. Design Criteria

- It is critical that straw wattles and compost socks are installed perpendicular to the flow direction and parallel to the slope contour (Figure 18). Also, rilling can occur beneath straw wattles if not properly entrenched and water can pass between straw wattles and compost socks if not tightly abutted together.
- In most conditions, compost socks do not require trenching (because of their superior ground contact). Straw wattles do require trenching.
- For straw wattles, dig narrow trenches across the slope on contour to a depth of 3 to 5 inches on clay soils and soils with gradual slopes. Construct trenches at contour intervals of 3 to 30 feet apart depending on the steepness of the slope, soil type, and rainfall. The steeper the slope the closer together the trenches.
- Start building trenches and installing wattles from the base of the slope and work up. Spread excavated material evenly along the uphill slope and compact using hand tamping or other methods.
- Install straw wattles snugly into the trenches and abut tightly end to end. Do not overlap the ends. Install stakes at each end of the wattle, and at 4-foot centers along entire length of wattle. If required, install pilot holes for the stakes using a straight bar to drive holes through the wattle and into the soil.
- On loose soils, steep slopes, and areas with high rainfall, dig the trenches to a depth of 5 to 7 inches, or 1/2 to 2/3 of the thickness of the wattle.
- At a minimum, use wooden stakes that are approximately 3/4 inches square and 24 inches long. Willow cuttings or 3/8-inch rebar can also be used for stakes. Drive stakes through the middle of the straw wattle or compost sock, leaving 2 to 3 inches of the stake protruding above the wattle or sock.

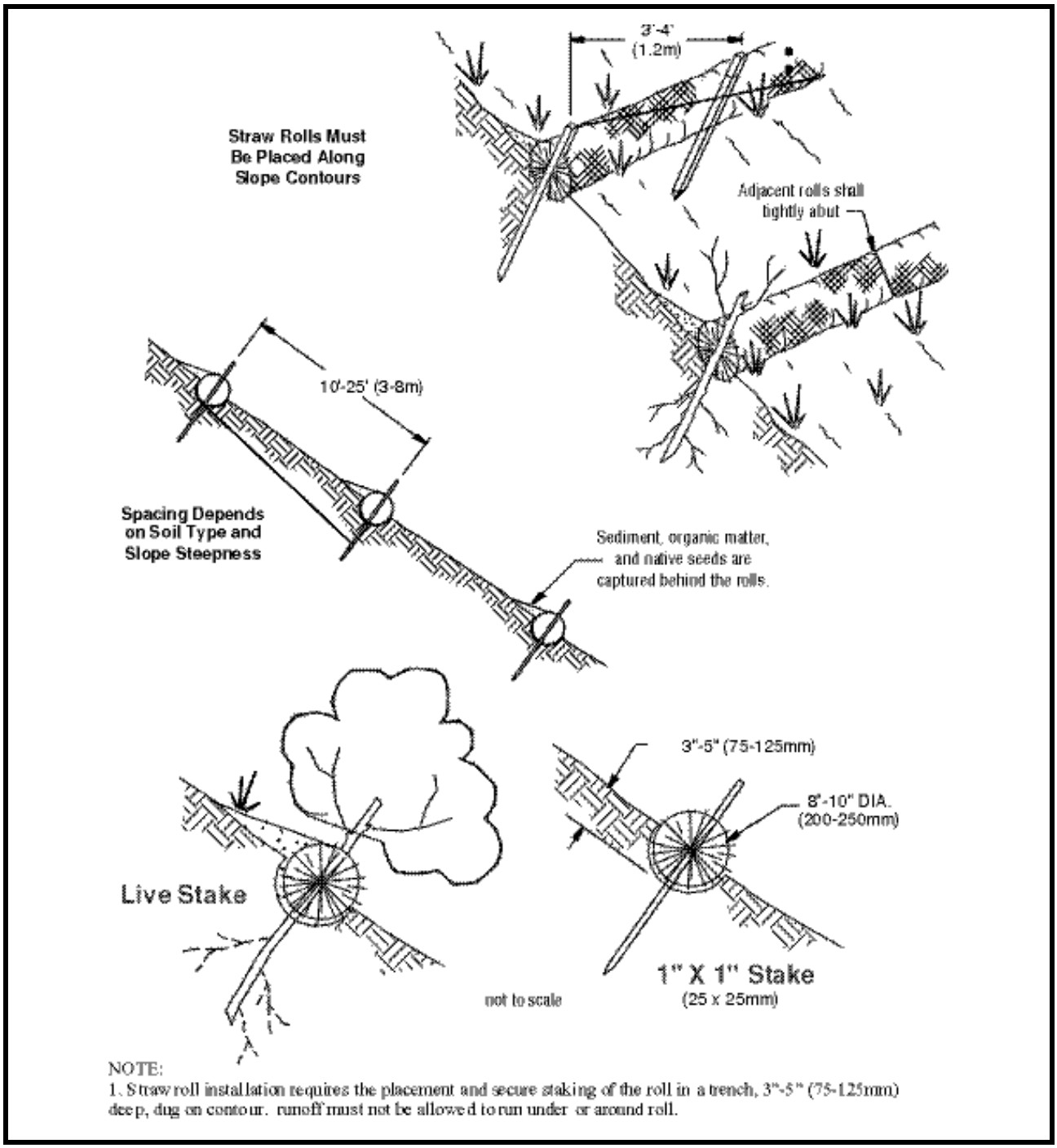

Figure 18. Straw Wattle Details.

- Compost socks are usually placed on the prepared surface, without trenching, so long as no rilling exists on that surface. If the surface is sloped, stake through the sock at 10-foot intervals, or more closely on steeper slopes. After staking, walk down the top of the sock to press it onto the ground surface.
- Compost berms are typically 1 foot high by 2 feet wide at the base, or 18 inches high and 3 feet wide.

- Protect compost berms from foot or vehicle traffic by a fence, or otherwise immediately seed to provide stability. Short-term (1 to 2 week) applications may not require protection and stabilization.

4.3.5.6. Maintenance

- Inspect wattles to ensure they are in contact with soil and thoroughly entrenched, especially after significant rainfall on steep sandy soils. Repair as necessary.
- Straw wattles and compost socks can be compressed by vehicle traffic, creating an overflow point. Repair immediately.
- Inspect the slope after significant storms and repair any areas where wattles are not tightly abutted or water has scoured beneath the wattles.

4.3.6. BMP E3.40: Sediment Trap

Sizing is perhaps less important than constant maintenance for this BMP because it is a temporary control. Inspections must be made and sediment removed regularly for sediment traps to function well.

4.3.6.1. Description

A small temporary ponding area with a gravel outlet formed by excavation and/or by constructing an earthen embankment.

4.3.6.2. Purpose

To collect and store sediment from project sites cleared and/or graded during construction. It is intended for use in relatively small drainage basins, with no unusual drainage features, and a projected quick build-out time. It should help in reducing silt-laden runoff which clogs off-site conveyance systems and destroys habitat, particularly in streams.

4.3.6.3. Conditions Where Practice Applies

Proposed building sites where the tributary drainage basin is **less than 3 acres**.

4.3.6.4. Planning Considerations

Prior to leaving a project site where the tributary drainage is 3 acres or less, stormwater runoff must pass through a sediment pond or other appropriate sediment removal BMP (refer to Table 1a and Table 1b for other approved stormwater controls).

If the contributing drainage area is greater than 3 acres, refer to Sediment Ponds (refer to DOE BMP C241), or subdivide the tributary drainage area.

The trap is a **temporary** measure (with a design life of approximately 6 months) and is to be maintained until the project site is permanently protected against erosion by vegetation and/or structures.

Sediment must be periodically removed from the trap. Plans shall detail how this sediment is to be disposed of, such as by use in fill areas on-site or removal to an approved off-site dump. Sediment traps, along with other perimeter controls, shall be installed before any land disturbance takes place in the drainage area.

Alternative Methods. Consider using a temporary aboveground storage tank (e.g., Baker Tank) for temporary storage. If a tank cannot be used, consider using a pond with pumping capabilities to another temporary holding structure. Refer to BMP E3.50 Portable Sediment Tank.

Wherever possible, sediment-laden water should be discharged into onsite, relatively level, vegetated areas (refer to BMP E3.30 Vegetated Strip).

Safety

Sediment traps and ponds should be limited to project sites where failure of the structure would not result in loss of life, damage to homes or buildings, or interruption of use or service of public roads or utilities.

Sediment traps and ponds are attractive to children and can be very dangerous. Local ordinances regarding health and safety must be adhered to. If fencing of the pond is required, the type of fence and its location shall be shown in the Construction Stormwater Pollution Control Plan.

4.3.6.5. Design Criteria

If permanent runoff control facilities are part of the project, they should be used for sediment retention. Refer to *Volume 3, Project Stormwater Control* for additional requirements.

To determine the sediment trap geometry, first calculate the design surface area (SA) of the trap, measured at the invert of the weir (Figure 19). Use the following equation:

$$SA = FS(Q_2/Vs)$$

Where:

Q_2 = Design inflow based on the peak discharge from the developed 2-year runoff event from the contributing drainage area as computed in the hydrologic analysis. The 10-year peak flow shall be used if the project size, expected timing and duration of construction, or downstream conditions warrant a higher level of protection. The design flows may be determined using either single-event or continuous simulation hydrologic modeling. If continuous simulation methods are used, use the 50 percent annual probability or 10 percent annual probability flows (2-year or 10-year recurrence interval respectively) as outlined above, and modeled using a 15-minute time step or less. If no hydrologic analysis is required for the other portions of the site design (conveyance, flow control, and/or water quality control), the Rational Method may be used for sediment trap design. Refer to *Appendix F* for additional guidelines.

Vs = the settling velocity of the soil particle of interest. The 0.02 millimeter (mm) (medium silt) particle with an assumed density of 2.65 grams per cubic centimeter (g/cm^3) has been selected as the particle of interest and has a settling velocity (Vs) of 0.00096 ft/sec.

FS = A safety factor of 2 to account for non-ideal settling.

Therefore, the equation for computing surface area becomes:

$$SA = 2 \times Q_2/0.00096 \quad \text{or}$$

2,080 square feet per cfs of inflow

***Note**: Even if permanent facilities are used, they must still have a surface area that is at least as large as that derived from the above formula. If they do not, the pond must be enlarged.*

Outlet riser or pipe should be 1.5 feet minimum above bottom to draw clean water and avoid discharging sediment that is still suspended in lower part of the water column.

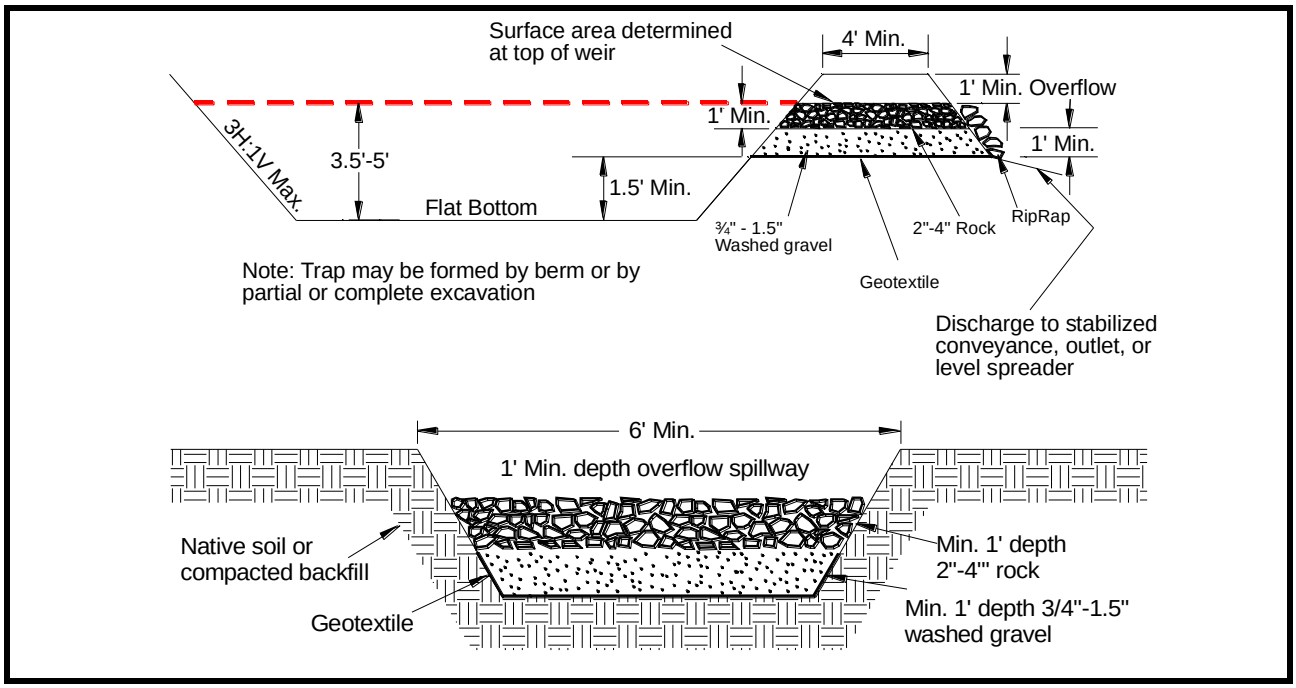

Figure 19. Cross Section of Sediment Trap and Outlet.

To aid in determining sediment depth, all sediment traps shall have a staff gauge with a prominent mark 1 foot above the bottom of the trap.

4.3.6.6. Maintenance

- The sediment trap must be continually monitored and regularly maintained. The size of the trap is less important to its effectiveness than is regular sediment removal. Remove sediment from the trap when it reaches approximately 1 foot in depth (assuming a 1-1/2 foot sediment accumulation depth). Conduct regular inspections and additional inspections after each large runoff-producing storm.

- Maintain and repair all temporary and permanent erosion and sediment control practices as needed to assure continued performance of their intended function.

- Remove all temporary erosion and sediment control measures within 5 business days after final site stabilization is achieved, or after the temporary BMPs are no longer needed, whichever is longer. Remove trapped sediment or stabilize on site. Permanently stabilize disturbed soil areas resulting from removal.

4.3.7. BMP E3.50: Portable Sediment Tank

4.3.7.1. Description

A compartmental tank brought temporarily to a construction site. Sediment-laden water is pumped into the tank to trap and retain sediment.

4.3.7.2. Purpose

A portable sediment tank is used for temporary storage of sediment-laden water and to trap and retain sediment prior to discharging to an appropriate discharge point.

4.3.7.3. Conditions Where Practice Applies

A portable sediment tank should be used on sites where excavations are deep and space is limited, or wherever the tank can be located per the manufacturer's specifications and with an appropriate discharge point.

4.3.7.4. Planning Considerations

Using a portable sediment tank is the preferred method to minimize potential impacts to the project site. The tank configuration, size, location, and discharge point must be presented in the Construction Stormwater Pollution Control Plan and approved by the City.

Follow the manufacturer's or vendor's specifications for choosing the appropriate location. In addition, the tank should be located for ease of clean-out and disposal of trapped sediment, and to minimize the interference with construction activities and pedestrian traffic.

If a permit is obtained for discharge to a combined system, conduct all discharge activities in accordance with permit requirements, including when it can be discharged and the discharge flow rate.

4.3.7.5. Design Criteria

Sediment tanks must have a minimum depth of 2 feet and be designed to allow for emergency flow to an approved discharge point. Outlet riser or pipe should be 1.5 feet minimum above bottom to draw clean water and avoid discharging sediment that is still suspended in lower part of the water column.

As noted above, tank configuration and size must be presented in the Construction Stormwater Pollution Control Plan and approved by the City. For planning purposes, the following formula should be used in determining the minimum storage volume of the sediment tank. Additional storage volume may be required by the City:

Pump Discharge in gallons per minute (gpm) x 16 = cubic feet storage

Container designs can vary from cylindrical tanks to rectangular boxes, depending on the manufacturer. Any tank configuration can be used if the storage volume is adequate and approval is obtained from the City.

Effectiveness

The pollution removal efficiency of the sediment tank can be increased by using flocculation chemicals, such as alum (aluminum sulfate) in the tank. Flocculation will allow very small suspended particles to settle out and decrease the time it takes for larger particles to settle out. Flocculation tank setup is considerably more complicated as the rate of flocculent addition must be carefully monitored.

For sites that do not require coverage under Ecology's Construction Stormwater General Permit, formal written approval from the City is required to use chemical treatment such as flocculation chemicals, regardless of site size. Any proposed chemicals and the method of use must also be formally approved by Ecology. Refer to DOE BMP C250 and *Appendix B* for more information on chemical treatment.

Alternatives

An alternative to a portable sediment tank is a tank constructed using steel drums, sturdy wood, or other material suitable for handling the pressure exerted by the volume of the water.

- Sediment tanks must have a minimum depth of 2 feet.
- The tank must be located for easy clean-out and disposal of the trapped sediment and to minimize the interference with construction activities.
- Once the water level nears the top of the tank, the pump must be shut off while the tank drains and additional capacity is made available.
- Clean-out the tank as soon as one-third of the original capacity is depleted due to sediment accumulation. The tank must be clearly marked showing the cleanout point.
- An appropriate discharge point must be selected, and approved by the City.

4.3.7.6. Maintenance

- Follow the manufacturer's or vendor's specifications.
- During construction, inspect BMPs daily during the work week with additional inspections scheduled during storm events. Make any required repairs immediately.
- Inspect filtering or control devices frequently. Repair or replace them to ensure that the structure functions as designed.
- Clean-out the tank as soon as one-third of the original capacity is depleted due to sediment accumulation. The tank must be clearly marked showing the clean-out point. Removed sediment may be disposed of on site if no contamination is present. Contaminated sediment must be disposed of according to local governing agency requirements.
- Systems should be filled in or otherwise removed when permanent dewatering controls are in place and connected to an approved treatment and receiving system.

4.3.8. BMP E3.60: Construction Stormwater Filtration

4.3.8.1. Description

Use of a filter to remove sediment from stormwater runoff.

4.3.8.2. Purpose

Filtration removes sediment from runoff originating from disturbed areas of the site.

4.3.8.3. Conditions Where Practice Applies

Construction stormwater filtration should be used when traditional BMPs used to control soil erosion and sediment loss from construction sites may not be adequate to ensure compliance with the water quality standard for turbidity in the receiving water. Filtration may be used in conjunction with gravity settling to remove sediment as small as fine silt (0.5 micrometers [µm]). The reduction in turbidity will be dependent on the particle size distribution of the sediment in the stormwater. In some circumstances, sedimentation and filtration may achieve compliance with the water quality standard for turbidity.

Unlike chemical treatment, the use of construction stormwater filtration does not require approval from Ecology. Filtration may also be used in conjunction with polymer treatment in a portable system to assure capture of the flocculated solids.

4.3.8.4. Design Criteria

Filtration with sand media has been used for over a century to treat water and wastewater. The use of sand filtration for treatment of stormwater has developed recently, generally to treat runoff from streets, parking lots, and residential areas. The application of filtration to construction stormwater treatment is currently under development.

Two types of filtration systems may be applied to construction stormwater treatment: rapid and slow. Rapid sand filters are the typical system used for water and wastewater treatment. They can achieve relatively high hydraulic flow rates, on the order of 2 to 20 gallons per minute per square foot (gpm/sf), because they have automatic backwash systems to remove accumulated solids. In contrast, slow sand filters have very low hydraulic rates, on the order of 0.02 gpm/sf, because they do not have backwash systems. To date, slow sand filtration has generally been used to treat stormwater. Slow sand filtration is mechanically simple in comparison to rapid sand filtration but requires a much larger filter area.

Filtration Equipment

Sand media filters are available with automatic backwashing features that can filter to 50 µm particle size. Screen or bag filters can filter down to 5 µm. Fiber wound filters can remove particles down to 0.5 µm. Filters should be sequenced from the largest to the smallest pore opening. Sediment removal efficiency will be related to particle size distribution in the stormwater.

Treatment Process Description

Stormwater is collected at interception point(s) on the site and is diverted to a sediment pond or tank for removal of large sediment and storage of the stormwater before it is treated

by the filtration system. The stormwater is pumped from the trap, pond, or tank through the filtration system in a rapid sand filtration system. Slow sand filtration systems are designed as flow through systems using gravity. If large volumes of concrete are being poured, pH adjustment may be necessary (refer to BMP C1.56 and C1.59).

Sizing Criteria for Flow-Through Treatment Systems for Discharges to Designated Receiving Waters:

When sizing storage ponds or tanks for flow-through systems for water bodies exempt from flow control, the treatment system capacity should be a factor. The untreated stormwater storage pond or tank should be sized to hold 1.5 times the runoff volume of the 10-year, 24-hour storm event minus the treatment system flow rate for an 8-hour period. For a chitosan-enhanced sand filtration system, the treatment system flow rate should be sized using a hydraulic loading rate between 6-8 gpm/ft^2. Other hydraulic loading rates may be more appropriate for other systems. Bypass should be provided around the chemical treatment system to accommodate extreme storms. Runoff volume should be calculated using the methods presented in *Volume 3, Chapter 4*. Worst-case conditions (i.e., producing the most runoff - most likely conditions present prior to final landscaping) should be used for analyses.

Sizing Criteria for Listed Creek Basins and Non-Listed Creek Basins:

Sites that must implement flow control for the developed site condition must also control stormwater release rates during construction.

4.3.8.5. Maintenance

- Rapid sand filters typically have automatic backwash systems triggered by a pre-set pressure drop across the filter. If the backwash water volume is not large or substantially more turbid than the stormwater stored in the holding pond or tank, return of backwash to the pond or tank may be appropriate. However, land application or another means of treatment and disposal may be necessary.
- Screen, bag, and fiber filters must be cleaned and/or replaced when they become clogged.
- Sediment shall be removed from the storage and/or treatment ponds as necessary. Typically, sediment removal is required once or twice during a wet season and at the decommissioning of the ponds.

4.3.9. BMP E3.65: Cleaning Inlets and Catch Basins

4.3.9.1. Description

Removing debris from existing inlets and catch basins, and connecting pipelines to protect and maintain private facilities and the public drainage system.

4.3.9.2. Purpose

The purpose of cleaning inlets and catch basins is to restore the function of the drainage collection system and reduce sediment transfer through the public drainage system.

4.3.9.3. Conditions Where Practice Applies

- Whenever other sediment control BMPs are not feasible or have failed.
- Whenever the public drainage collection facilities immediately downstream are not functioning.
- Whenever there is ponding in the travel lanes of the public roadway.

4.3.9.4. Planning Considerations

Large amounts of sediment can be conveyed through inlets, catch basins and the public storm drain system. Sediment can also plug these facilities, causing a flooding hazard or a hazard to traffic and pedestrians in the public roadway. Protection from sediment and debris is not always possible or effective; therefore, cleaning is the last action taken.

The best ways to prevent sediment from entering the storm drain are:

- To control the discharge points
- Stabilize the site to control pollution at its source
- Good housekeeping such as sweeping, vacuuming and cleaning (BMP E3.70)

It is important to identify which BMP is feasible at each point of drainage collection and discharge, and during each construction phase. Inlet and catch basin cleaning must be performed when other protection methods are not possible or fail.

4.3.9.5. Design Criteria

- Identify the drainage flow path(s) on-site and downstream for a minimum distance of 500 feet or 1 block, whichever is further in the public roadway.
- Identify the location of all existing inlets and catch basins within the project area that may be impacted. Identify whether they will remain, be removed, or be abandoned during construction.
- When an inlet or catch basin is to be removed or abandoned, plug that path to the public drainage system prior to demolition of the immediate surroundings.

- Storm drain inlet protection (BMP E3.25) is required when feasible. When it is not feasible, or fails, clean affected inlets, catch basins, and connecting pipe.
- Use a vacuum truck or shovels with proper disposal for cleaning. Jetting material downstream into the public drainage system is not allowed.
- Protect new inlets and catch basins from on-site sediment and clean after site stabilization, as necessary.

4.3.9.6. Maintenance

- Regularly inspect inlets and catch basins on site and within 500 feet or 1 block, whichever is further, in the public roadway. Increase inspections as necessary, especially after street sweeping.
- Clean inlets when sediment and/or debris are visible.
- Clean catch basins whenever debris and/or sediment occupy more than one-half the capacity or is within 18 inches of the outlet pipe invert.
- Always clean inlets and catch basins after site stabilization.

4.3.10. BMP E3.70: Street Sweeping and Vacuuming

4.3.10.1. Description

Use of human-powered and/or mechanical equipment to collect sediment on paved surfaces to minimize sediment accumulation in private systems and the public drainage system. This BMP may also be used to clean paved surfaces in preparation for final paving.

4.3.10.2. Purpose

Sweeping and vacuuming minimizes project area sediment from entering the public drainage system. Targeted pollutants include: sediment, nutrients, trash, metals, bacteria, oil and grease, and organics.

4.3.10.3. Conditions Where Practice Applies

Sweeping and vacuuming are suitable on any paved surface and, in particular, anywhere sediment is tracked from the project site onto public or private paved streets and roads, typically at the stabilized construction entrance (BMP E2.10) and other construction access points. Sweeping and vacuuming are also applicable during preparation of paved surfaces for final paving.

4.3.10.4. Planning Considerations

Sweeping and vacuuming may not be effective when sediment is wet or when tracked soil is caked (caked soil may need to be scraped loose). Washing is not an alternative to sweeping and vacuuming because of the risk of pollutant transport.

4.3.10.5. Design Criteria

- Control the number of points where vehicles can leave the site to allow focused sweeping and vacuuming efforts.
- Do not use kick brooms or sweeper attachments.
- If not mixed with debris or trash, consider incorporating the removed sediment back into the project.

4.3.10.6. Maintenance

- After initiating sweeping and/or vacuuming, inspect the potential sediment tracking locations daily to ensure they are clean of any sediment.
- Visible sediment tracking should be swept or vacuumed on a daily basis.
- Be careful not to sweep up any unknown substance or any object that may be potentially hazardous.
- Adjust brooms frequently; maximize efficiency of sweeping operations.
- After sweeping is finished, properly dispose of sweeper wastes at an approved disposal site.

CHAPTER 5 – STANDARDS AND SPECIFICATIONS FOR CONSTRUCTION POLLUTANTS OTHER THAN SEDIMENT

5.1. Source Control Practices

The City is committed to protecting the public drainage system, ponds, wetlands, lakes, streams, and coastal and estuarine water bodies from damage by sediment and other pollutants generated during construction activities. The focus of *Chapter 4* was on erosion and sediment control; however, potential pollutants other than sediment are common at construction sites and may also impact stormwater quality when they come into direct contact with runoff.

Potential pollutants include non-hazardous materials such as wood, paper, demolition debris, concrete, and metal scraps. There are also potential pollutants from hazardous materials and their associated wastes such as pesticides (e.g., insecticides, fungicides, herbicides, rodenticides), petrochemicals (e.g., oils, gasoline, asphalt degreaser) and other construction chemicals such as concrete products, sealer, paints, and washwater associated with these products.

The most economical and effective controls for pollutants other than sediment are good "housekeeping" practices, and an awareness by construction workers, planners, engineers, and developers of the need for and purpose of compliance with federal, state, and local regulations.

Please refer to the Stormwater Code and *Volume 4 - Source Control* for further information concerning controlling pollution at the source and preventing contamination of stormwater for all discharges. This volume should be reviewed to ensure that all Director's Rules requirements are being met for each construction project.

The standards for each individual BMP are divided into six sections:

1. Description
2. Purpose
3. Conditions Where Practice Applies
4. Planning Considerations
5. Design Criteria
6. Maintenance

Note that some BMPs were divided into different sections to reflect their individual needs. As with erosion and sediment control BMPs, source control BMPs include "Conditions Where Practice Applies," which always refers to site conditions. As site conditions change, BMPs must be changed to remain in compliance.

This chapter contains the standards and specifications for source control BMPs to properly manage construction pollutants other than sediment. They include:

- BMP C1.10: Certified Erosion and Sediment Control Lead (*Section 5.1.1*)
- BMP C1.15: Material Delivery, Storage, and Containment (*Section 5.1.2*)
- BMP C1.20: Use of Chemicals During Construction (*Section 5.1.3*)
- BMP C1.25: Demolition of Buildings (*Section 5.1.4*)
- BMP C1.30: Building Repair, Remodeling, and Construction (*Section 5.1.5*)
- BMP C1.35: Sawcutting and Paving Pollution Prevention (*Section 5.1.6*)
- BMP C1.40: Temporary Dewatering (*Section 5.1.7*)
- BMP C1.45: Solid Waste Handling and Disposal (*Section 5.1.8*)
- BMP C1.50: Disposal of Asbestos and Polychlorinatedbiphenols (PCBs) (*Section 5.1.9*)
- BMP C1.55: Airborne Debris Curtain (*Section 5.1.10*)
- BMP C1.56: Concrete Handling and Disposal (*Section 5.1.11*)
- BMP C1.59: High pH Neutralization Using CO_2 (*Section 5.1.12*)

5.1.1. BMP C1.10: Certified Erosion and Sediment Control Lead

5.1.1.1. Description

A project representative who is a Certified Erosion and Sediment Control Lead (CESCL). The project proponent designates at least one person as the responsible representative in charge of erosion and sediment control and water quality protection. The designated person shall be the CESCL.

5.1.1.2. Purpose

The purpose of a designated CESCL is to ensure compliance with all city, county, state, and federal erosion and sediment control and water quality requirements.

5.1.1.3. Conditions Where Practice Applies

A CESCL shall be made available on Large Projects. The CESCL must perform all duties and take on all responsibilities listed in this BMP. The CESCL must also determine the site transport rating according to the Construction Site Sediment Damage Potential calculation (*Section 5.1.1.6*).

If the rating is high, the CESCL must arrange for a special inspection by the City or be a Certified Professional in Erosion and Sediment Control (CPESC). For more information about special inspections and the CPESC certification, visit (www.cpesc.net) and (http://www.seattle.gov/dpd/Site_Development/SiteInspections/default.asp#firstground).

If the rating is low, the special inspection is not required and the CESCL does not need to have CPESC certification, but must meet the requirements of this BMP.

5.1.1.4. Certification Criteria

The training and administrative requirements for a responsible person to be designated as the CESCL are listed below. The CESCL shall:

- Have a current certificate proving attendance in an erosion and sediment control training course that meets the minimum ESC training and certification requirements established by Ecology. Ecology maintains a list of ESC training and certification providers (www.ecy.wa.gov/programs/wq/stormwater).

  OR

  Be a Certified Professional in Erosion and Sediment Control (CPESC) or have a special inspection by the City; for additional information on the CPESC certification, go to (www.cpesc.net).

- Certification shall remain valid for 3 years.

- The CESCL shall have authority to act on behalf of the contractor or developer and shall be available, on call, 24 hours per day throughout the period of construction.

- The name, telephone number, fax number, and address of the designated CESCL shall be recorded in the:

    - Small Project Construction Stormwater Control Plan
    - Large Project Construction Stormwater Control Plan
- A CESCL may provide inspection and compliance services for multiple construction projects in the same geographic region.

5.1.1.5. Duties and Responsibilities

The duties and responsibilities of the CESCL shall include, but are not limited to the following:

- Maintain all applicable documentation, permits, and plans on site at all times.
- Direct BMP installation, inspection, maintenance, modification, and removal.
- Update all project drawings and plans with changes made.
- Keep daily logs and inspection reports. Inspection reports should include:
    - Inspection date/time.
    - Weather information: general conditions during inspection and approximate amount of precipitation since the last inspection.
    - A summary or list of all BMPs implemented, including observations of all erosion/sediment control structures or practices. The following shall be noted:
        - Locations of BMPs inspected
        - Locations of BMPs that need maintenance
        - Locations of BMPs that failed to operate as designed or intended
        - Locations of where additional or different BMPs are required
    - Duties relating to temporary dewatering (BMP C1.40)
    - Visual monitoring results, including a description of discharged stormwater. The presence of suspended sediment, turbid water, discoloration, and oil sheen shall be noted, as applicable.
    - Any water quality monitoring performed during inspection
    - General comments and notes, including a brief description of any BMP repairs, maintenance or installations made as a result of the inspection
- Facilitate, participate in, and take corrective actions resulting from inspections performed by outside agencies or the owner.

5.1.1.6. Determining Construction Site Sediment Damage Potential

The following rating system allows an objective evaluation of a construction site's potential to discharge sediment. The Large Project CESCL must follow the steps outlined below to determine the site's rating.

Step 1 – Hydraulic Nearness Assessment

Sites are hydraulically near a feature if the pollutant load and peak quantity of runoff from the site will not be naturally attenuated before entering the feature. The conditions that render a site hydraulically near to a feature include, but are not limited to, the following:

- The feature or a buffer to protect the feature is within 200 feet downstream of the site.
- Runoff from the site is tight-lined to the feature or flows to the feature through a channel or ditch.

A site is not hydraulically near a feature if one of the following takes place to provide attenuation before runoff from the site enters the feature:

- Sheet flow through a vegetated area with dense ground cover.
- Flow through a wetland not included as a sensitive feature.
- Flow through a significant shallow or adverse slope, not in a conveyance channel, between the site and the sensitive feature.

If none of the sediment/erosion sensitive features are hydraulically near the site, go to Step 2.

Step 2 – ECA Feature Identification

ECAs are typically subject to significant degradation due to the effect of sediment deposition or erosion. Special protections must be provided. ECA features include but are not limited to:

a) Wetlands

b) Areas important for fish and wildlife

c) Riparian corridors (such as creeks)

d) Geologic hazard areas (such as landslide-prone, steep-slope and liquefaction-prone areas)

e) Flood-prone areas

f) Abandoned landfills

Identify any ECA features, and proceed to Step 3.

Step 3 – Construction Site Sediment Transport Potential

Using the following worksheet, determine the total points for each location that meets the requirements of Steps 1 and 2. Assign points based on the most critical condition that affects 10 percent or more of the site. If soil testing has been performed on site, the results should be used to determine the predominant soil type on the site. When using published soil surveys, the dominant soil type may be in question, particularly when the site falls on a boundary between two soil types or when one of two soil types may be present on a site. In this case, the soil type resulting in the most points on the rating system will be assumed unless site soil tests indicate that another soil type dominates the site.

Use the point score from Step 3 to determine whether the development site has a high potential for sediment transport off of the site.

Total Score	Transport Rating
<100	Low
≥100	High

A high transport rating indicates a higher risk that the site will generate sediment contaminated runoff.

Construction Site Sediment Transport Potential Worksheet

		Points
A.	Existing slope of site (average, weighted by aerial extent):	
	2% or less	0
	>2 to 5%	5
	>5 to 10%	15
	>10 to 15%	30
	>15%	50
B.	Site Area to be cleared and/or graded:	
	<5,000 square feet	0
	5,000 square feet to 1 acre	30
	>1 acres	50
C.	Quantity of cut and/or fill on site:	
	<500 cubic yards	0
	500 to 5,000 cubic yards	5
	>5,000 to 10,000 cubic yards	10
	>10,000 to 20,000 cubic yards	25
	>20,000 cubic yards	40
D.	Runoff potential of predominant soils (Soil Conservation Service):	
	Hydrologic soil group A	0
	Hydrologic soil group B	10
	Hydrologic soil group C	20
	Hydrologic soil group D	40
E.	Erosion Potential of predominant soils (Unified Classification System):	
	GW, GP, SW, SP soils	0
	Dual classifications (GW-GM, GP-GM, GW-GC, GP-GC, SW-SM, SW-SC, SP-SM, SP-SC)	10
	GM, GC, SM, SC soils	20
	ML, CL, MH, CH soils	40
F.	Surface or groundwater entering site identified and intercepted:	
	Yes	0
	No	25
G.	Depth of cut or height of fill >10 feet:	
	Yes	25
	No	0
H.	Clearing and grading will occur in the wet season (October 1-May 1):	
	Yes	50
	No	0
TOTAL POINTS		____

5.1.2. BMP C1.15: Material Delivery, Storage, and Containment

5.1.2.1. Description

Best practices for all deliveries, storage, and containment of materials, liquid and solid on a construction site that may potentially pollute stormwater.

5.1.2.2. Purpose

The purpose of this BMP is to prevent, reduce, or eliminate the discharge of pollutants to the drainage system or receiving water from the delivery and storage of materials on site. This is achieved by minimizing the storage of hazardous materials on site, storing materials in a designated area, and installing secondary containment.

5.1.2.3. Conditions Where Practice Applies

These procedures are recommended for use at all construction sites with delivery and storage of the following materials:

- Petroleum products such as fuel, oil and grease
- Soil stabilizers and binders (e.g., Polyacrylamide)
- Fertilizers, pesticides, and herbicides
- Detergents
- Asphalt and concrete compounds
- Hazardous chemicals such as acids, lime, adhesives, paints, solvents and curing compounds
- Any other material that may be detrimental if released to the environment

5.1.2.4. Planning Considerations

Dangerous solid wastes must be stored and handled according to special guidelines and may require a permit. Follow the regulations and requirements outlined by Ecology and, in some cases, King County.

5.1.2.5. Design Criteria

The following steps must be taken to minimize risk:

- Locate temporary storage area away from vehicular traffic, near the construction entrance(s), and away from drainage channels or storm drains.
- Keep Material Safety Data Sheets (MSDS) on site for all materials stored. Keep chemicals in their original labeled containers.
- Minimize hazardous material storage on site.
- Handle hazardous materials as infrequently as possible.

- During the wet weather season (October 1 to April 30), consider storing materials in a covered area.
- Do not store chemicals, drums, or bagged materials directly on the ground. Place these items on a pallet and, when possible, in secondary containment.
- If drums must be kept uncovered, store them at a slight angle to reduce ponding of rainwater on the lids to reduce corrosion. Domed plastic covers are inexpensive and snap to the top of drums, preventing water from collecting.
- Store materials with secondary containment, such as a curbed paved area, pallets with built-in containment, or even a children's wading pool for non-reactive materials such as detergents, oil, grease, and paints. Small amounts of material may be secondarily contained in "bus boy" trays or concrete mixing trays.
- Use spill prevention and control measures for maintenance, fueling, and repair of heavy equipment and vehicles. Clean contaminated surfaces immediately following any spill incident.
- Provide cover, containment, and protection from vandalism for all chemicals, liquid products, petroleum products, and other materials that have the potential to pose a threat to human health or the environment. Include secondary containment for on-site fueling tanks.

Secondary Containment Practices:

- Store all hazardous substances with a listed Reportable Quantity in approved containers and drums and in secondary containment. The list of Reportable Quantities is available at: (http://www.epa.gov/superfund/programs/er/triggers/haztrigs/302final.xls).
- Provide temporary secondary containment facilities for a spill containment volume able to contain precipitation from a 25-year, 24-hour storm event, plus 10 percent of the total enclosed container volume of all containers, or 110 percent of the capacity of the largest container within its boundary, whichever is greater.
- Provide sufficient separation between stored containers to allow for spill cleanup and emergency response access.
- During the wet weather season (October 1 to April 30), cover each secondary containment facility during non-working days, prior to and during rain events.
- Provide secondary containment facilities that are impervious to the materials stored therein for a minimum contact time of 72 hours.

5.1.2.6. Maintenance

- Keep secondary containment facilities free of accumulated rainwater and spills. In the event of spills or leaks, collect accumulated rainwater and spills and place into drums.

Treat these liquids as hazardous waste unless testing determines them to be non-hazardous.

- Keep material storage areas clean, organized and equipped with an ample supply of appropriate spill clean-up material (spill kit). For spill prevention and cleanup requirements, including spill kit instructions, refer to *Volume 4- Source Control*.

5.1.3. BMP C1.20: Use of Chemicals During Construction

5.1.3.1. Description

Best practices for control, storage, cleaning and disposal of all chemicals used at a construction site that may potentially pollute stormwater.

5.1.3.2. Purpose

A large percentage of potential pollutants from chemicals can be effectively controlled at construction sites through implementation of source control and soil erosion and sedimentation control practices.

5.1.3.3. Conditions Where Practice Applies

This BMP applies to most construction sites since many types of chemicals may be used during construction activities. These chemical pollutants include paints, acids, cleaning solvents, asphalt products, soil additives, concrete-curing compounds, and many others. These materials can be carried by sediment and water runoff from construction sites.

5.1.3.4. Planning Considerations

Disposal of concrete products, additives, and curing compounds depends on the product. Some liquid wastes must be stored and handled according to special guidelines and may require a permit. Follow the regulations and requirements outlined by Ecology and, in some cases, King County.

Refer to *Volume 4 - Source Control* to see if additional source controls are required.

5.1.3.5. Design Criteria

- As in the case of other pollutants, good housekeeping is the most important means of controlling pollution.
- Use only the recommended amounts of chemical materials and apply them in a proper manner to further reduce pollution.
- Acid and alkaline solutions from exposed soil or rock units high in acid, and alkaline-forming natural elements should be controlled using good site planning and pre-construction geological surveys. Refer to BMP C1.56 Concrete Handling and Disposal. Neutralization of these pollutants often provides the best treatment.
- The City requires construction site operators to adjust the pH of stormwater if necessary to prevent violations of water quality standards. Refer to BMP C1.59 High pH Neutralization Using CO_2.
- Chemicals used for temporary pH adjustment at construction sites (other than CO_2 or dry ice) must be approved in writing by Ecology prior to use. As such, formal approval from the City is based on Ecology's protocols. For a list of treatment chemicals that have been evaluated and are currently approved for use by Ecology visit: (http://www.ecy.wa.gov/programs/wq/stormwater/newtech/index.html).

- For paint disposal, the correct method of wastes varies with the material:
    - Wash-up waters from water-based paints may go into a sanitary sewer, which is regulated by the King County Industrial Waste Program (206) 263-3000.
    - Wastes from oil-based paints, cleaning solvents, thinners, and mineral spirits must be disposed of through a licensed waste management firm or treatment, storage, and disposal (TSD) facility.

5.1.3.6. Maintenance

- Seal fractures in the bedrock with grout and bentonite will reduce the amount of acid or alkaline seepage from excavations.
- Adequate treatment and disposal of concrete further reduces pollution.

5.1.4. BMP C1.25: Demolition of Buildings

5.1.4.1. Description

Methods used to protect stormwater from pollution associated with the removal of existing buildings (and clearing of the rubble) by means of controlled explosions, wrecking balls, or manual methods.

5.1.4.2. Purpose

The loose debris produced by building demolition activities can contain toxic organic compounds, metals, and suspended solids that may pollute stormwater.

5.1.4.3. Conditions Where Practice Applies

Complete or partial building demolition, structure demolition, or other activity that requires controlled explosions, wrecking balls, or manual methods to demolish a structure, and/or clearing of demolition rubble.

5.1.4.4. Planning Considerations

This BMP is intended to provide basic information to protect stormwater from being polluted by demolition debris. However, demolition of buildings is regulated in Washington by Ecology and the Puget Sound Clean Air Agency (PSCAA). Refer to Ecology's web page "Manage Construction and Demolition Waste" for additional requirements (http://www.ecy.wa.gov/programs/hwtr/dangermat/demo_debris_constr_materials.html) and PSCAA for other information and requirements (http://www.pscleanair.org/regulated/asbestos/contractors/demolitions.aspx).

5.1.4.5. Design Criteria

- Protect the drainage system from sediment-laden runoff and loose particles. To the extent possible, use dikes, berms, or other methods to protect overland discharge paths from runoff.
- Sweep street gutters, sidewalks, driveways, and other paved surfaces in the immediate area of the demolition daily to collect and properly dispose of loose debris and garbage.
- Spray water to help control windblown fine materials such as soil, concrete dust, and paint chips. Control the amount of water so that runoff from the site does not occur, yet dust control is achieved. Never use oils for dust control.
- Schedule demolition to take place during a dry time of the year.

5.1.4.6. Maintenance

- Clean up debris on a regular basis to prevent stormwater contamination.

5.1.5. BMP C1.30: Building Repair, Remodeling, and Construction

5.1.5.1. Description

Best practices for the control of pollutants associated with construction of buildings and other structures such as, but not limited to, remodeling of existing buildings and houses, and general repair work on building exteriors.

5.1.5.2. Purpose

Pollutants of concern may be generated during building repair, remodeling, and construction, including petroleum hydrocarbons, organic compounds, suspended solids, metals, pH, and oils and greases.

5.1.5.3. Conditions Where Practice Applies

When buildings and/or structures are repaired, remodeled, and constructed.

5.1.5.4. Planning Considerations

Educating employees about the need to control site activities is one of the most effective methods to prevent stormwater pollution.

5.1.5.5. Design Criteria

- Use ground cloths or drop cloths underneath activities.
- Use drain covers or similarly effective devices if dust, grit, washwater, or other pollutants may impact onsite or downstream off-site catch basins. Collect and dispose of the accumulated sediment-laden runoff and solids before the cover is removed.
- Clean all tools in an inside sink that drains to the sanitary sewer. If cleaning must be done outside, collect all wastewater and dispose of properly.
- Clean non-water-based finishes from tools in a manner that allows the collection of used solvents for recycling or proper disposal.
- Water can be sprayed to help control windblown fine materials such as soil, concrete dust, and paint chips. Control the amount of water so that runoff from the site does not occur, yet dust control is achieved. Never use oils for dust control.

5.1.5.6. Maintenance

- Maintain the drain covers regularly (weekly or as needed) to prevent plugging.
- Recycle materials whenever possible.

5.1.6. BMP C1.35: Sawcutting and Paving Pollution Prevention

5.1.6.1. Description

Best practices to minimize and eliminate wastewater and slurry from sawcutting and paving operations including, but not limited to, the following:

- Sawing
- Surfacing
- Coring
- Grinding
- Roughening
- Hydro-demolition
- Bridge and road surfacing

5.1.6.2. Purpose

Sawcutting and paving operations generate slurry and wastewater that contain fine particles and high pH, both of which can violate the water quality standards in receiving waters.

5.1.6.3. Conditions Where Practice Applies

Any time sawcutting or paving operations take place.

5.1.6.4. Planning Considerations

This BMP is intended to minimize and eliminate wastewater and slurry from entering the public drainage control system and waters of the state. Wastewater may go into a sanitary sewer, which is regulated by the King County Industrial Waste Program (206) 263-3000.

5.1.6.5. Design Criteria

- Vacuum slurry and cuttings during the activity to prevent migration off site. Do not allow slurry and cuttings to remain on permanent concrete or asphalt paving overnight.
- Dispose of collected slurry and cuttings in a manner that does not violate groundwater or surface water quality standards.
- Do not drain wastewater that is generated during hydro-demolition, surface roughening, or similar operations to any natural or constructed drainage conveyance. Dispose of wastewater in a manner that does not violate groundwater or surface water quality standards.
- Clean and dispose of waste material and demolition debris in a manner that does not cause contamination of water. If the area is swept with a pick-up sweeper, haul out the material to an appropriate disposal site.

5.1.6.6. Maintenance

Continually monitor operations to determine whether slurry, cuttings, or wastewater could enter the public drainage system or the public sewer. If inspections show that a violation of water quality standards could occur, stop operations and immediately implement preventative measures such as berms, barriers, secondary containment, and vacuum trucks.

5.1.7. BMP C1.40: Temporary Dewatering

5.1.7.1. Description

The removal and appropriate discharge and release of groundwater, whether it is from a simple trench or a large excavation.

5.1.7.2. Purpose

Temporary dewatering is used when groundwater needs to be removed before certain operations can be performed, or to keep work conditions safe. It is typical for contractors to use ditch pumps and or well points to dewater, but it is very important to identify and use the appropriate locations for discharge. Dewatering may require a temporary BMP for settling and/or filtering sediment-laden water. A temporary sediment pond or other equivalent facility is used to settle and/or filter the water. Properly designed and implemented temporary dewatering will:

- Prevent the discharged water from eroding soil on site
- Remove sediment from the collected water
- Choose the best location for discharge
- Preserve downstream natural resources and real property

Projects which are required to comply with Minimum Requirements for Flow Control (SMC 22.805.080) must account for dewatering discharge in determining allowable release rate.

5.1.7.3. Conditions Where Practice Applies

Public or private properties with the following:

- Foundation excavations
- Utilities and infrastructure construction projects, including installation, repair and maintenance of:
    - Electrical conduits
    - Vaults/tanks
    - Sewer and storm drain systems
    - Phone and cable lines
    - Gas or other fuel lines
    - Other excavations or graded areas requiring dewatering

Clean, non-turbid dewatering water, such as well-point groundwater, may be discharged to the public combined sewer, systems tributary to a receiving water, or directly into a receiving water provided the dewatering flow is discharged to a stabilized system and does not cause

erosion or flooding of receiving waters. Clean dewatering water should not be routed through stormwater sediment ponds.

If dewatering must occur, a Side Sewer Permit for Temporary Dewatering (SSPTD) and a Discharge Authorization Letter from King County Industrial Waste may be required prior to commencing dewatering at the site. The SSPTD permit may include a separate Temporary Dewatering Plan, water quality treatment, and/or flow control requirements, as well as compliance monitoring requirements.

For a copy of the SSPTD "Tip", go to the DPD Public Resources Center on the 20th floor of the Seattle Municipal Tower, 700 Fifth Avenue, Seattle, Washington 98124 (same location as above), or visit DPD's CAM website (http://web1.seattle.gov/DPD/CAMs/CamList.aspx).

5.1.7.4. Planning Considerations

Prior to implementing temporary dewatering, minimize the amount of water that will be collected and the potential amount of sediment that may enter the water. Implement the following prior to temporary dewatering:

- For trench excavation, limit the trench length to 150 feet and place the excavated material on the up gradient side of the trench.
- Install diversion ditches or berms to minimize the amount of clean stormwater runoff allowed into the excavated area.
- Dewatering in periods of intense, heavy rain, when the infiltrative capacity of the soil is exceeded, should be avoided.
- Never discharge to bare or newly vegetated areas.

Once the site has been prepared as described above, assess the site for the issues listed below to assist the City in determining which discharge option to approve:

- Water clarity. If the water is turbid (cloudy), there are dissolved and/or settable solids in the water that should be filtered or settled out prior to discharge. Determine if contaminants are present in impounded water. Check for odors, discoloration, or oily sheen. Check any soils and/or groundwater testing results.
- If contamination may be or is present, the City reserves the right to require sampling and analysis to prove that water quality is being protected. Contact SPU to get assistance in identifying the required parameters of concern and any specific sampling requirements. Highly turbid or contaminated dewatering water shall be handled separately from stormwater. Contaminated groundwater is a prohibited discharge; however, it may be treated to become a permissible discharge if metals and other pollutants are mitigated to meet concentration thresholds in state water quality standards. If no such water quality standards exist for a pollutant, discharge limits shall be based on other appropriate and relevant water quality criteria (e.g., MTCA Method A, U.S. EPA national recommended water quality criteria).

- Depending upon the type of downstream infrastructure and the desired discharge volume, the dewatering discharge flow rate may be required to be limited to a daily (measured by gallons or cubic feet per day) or instantaneous (measured by gallons or cubic feet per second) maximum.

5.1.7.5. Design Criteria

One of several types of dewatering facilities may be constructed, depending upon site conditions and the type of activities.

Water Removal

The removal of water from the excavated area can be accomplished by numerous methods. The most common of these are:

- Gravity drain through a daylight channel
- Mechanical pumping
- Siphoning
- Using the appropriate construction equipment to scoop and dump water from the excavation

Stabilize channels or any conveyance feature dug for discharging water from the excavated area. If flow velocities cause erosion within the channel, then install a ditch lining, such as geotextile or heavy plastic sheeting.

Discharge Structure

Water conveyed by channels, ditches, pumps, hose, or equipment buckets should be discharged in a regulated manner to a stable discharge structure. The structure must be:

- Appropriate to filter sediment
- Able to withstand the velocity of the discharged water to prevent erosion
- Sized and operated such that pumped water will flow through a sediment removal device
- Not overtop the structure

Typical constructed areas are:

- Vegetated buffers
- Sediment traps (refer to BMP E3.40)
- Portable sediment tanks (refer to BMP E3.50)
- Enclosure of hay bales, filter fabric (refer to BMP E3.10), or both
- Sediment filter bag

Sediment Removal – General

Sediment should be settled prior to discharge. All settling systems should be engineered and adequately sized for site conditions. General settling and filtering options include the following:

- Containment in a pond structure for a minimum of 4 hours or until water is clear. Place pump in a gravel bed at bottom of pond.
- Discharge to a manufactured / pre-made structure specifically designed for sediment removal, like a Silt Sak, Silt Bag, or other similar product. Pump to a settling tank with sampling ports.
- Transport off-site in vehicle, such as a vacuum flush truck, for legal disposal.
- Filter through a sieve or other filter media (e.g., swimming pool filter). Simple on-site filter systems can be constructed including: wrapping the ends of the suction and discharge pipes with filter fabric; discharging through a series of drums filled with successively finer gravel and sand; and other filtering techniques like those described in the inlet protection section (*Section 4.3.3*).
- Manufactured bags, polymers, or other systems. These systems do not always work on fine clay soils, and will only be allowed for use where approved. Chemical treatments should have state approval before they are used (refer to DOE BMP C250 Construction Stormwater Chemical Treatment and *Appendix B*).
- Line or protect the flow path in some way to prevent mobilization of additional sediment.
- Dry and reuse filtered material on site in a mixture with other site soils, or appropriately dispose of the material based on nature and levels of any contaminants present.

Vegetated Buffer

A well stabilized, onsite, vegetated area may serve as a dewatering facility if the area is appropriate to filter sediment and at the same time withstand the velocity of the discharged water without erosion. The discharge of sediment-laden water onto a vegetated area must not pose a threat to the survival of the existing vegetative stand through smothering by sedimentation.

Direct discharge of lightly sediment bearing water may be able to go directly into well-buffered areas with a 2 percent slope as long as a method of spreading flow into sheet flow is available.

Straw Bale/Filter Fabric Pit

An excavated or bermed sedimentation pond or structure can also be created using straw bale and filter fabric (refer to BMP E3.10 Filter Fence) to create a pit. Flow to the structure may not exceed the sediment removal structure's capacity to settle and filter flow or the structure's volume capacity. Wherever possible, the structure should also discharge to a well-

vegetated buffer (see above) through sheet flow and should maximize the distance to the nearest receiving water and minimize the slope of the buffer area. Also, the excavated portion may need to be lined with geotextile to help reduce scour and to prevent the inclusion of soil from within the structure (refer to BMP E3.40 Sediment Trap).

Sediment Filter Bag

The filter bag should be constructed of non-woven geotextile material that will provide adequate filtering ability to capture larger soil particles from the pumped water. The bag should be constructed so that there is an inlet neck that may be clamped around the dewatering pump discharge hose so that all of the pumped water passes through the bag.

The filter bag should be used in combination with a straw bale/silt fence pit when located within 50 feet of a receiving water. When the distance is greater than 50 feet, the bag may be placed on well-established vegetation, or on an aggregate pad constructed of crushed rock at a minimum depth of 6 inches. The bag should never be placed on bare soil.

The capacity of the sediment filter bag should be adequate to handle the dewatering pump discharge, and should be based on the bag manufacturer's recommendation.

When used in conjunction with a straw bale/silt fence pit, a filter bag may be operated until the water in the pit reaches the crest of the emergency overflow. The pump must be shut off at this point. When placed on either a rock pad or well-established vegetation, the bag may be operated until the discharge from the bag reaches a receiving water. Unless the discharge is at least as clear as the receiving water, the pump must be shut off at this point.

When the bag has been completely filled with sediment, it should be cut open, regraded in place, and immediately stabilized with either sod or erosion control mat.

5.1.7.6. Maintenance

- Check filtering devices frequently to make sure they are unclogged and operating correctly. Pay special attention to the buffer area for any sign of erosion and concentration of flow that may compromise the buffer area. Where possible, observe the visual quality of the effluent and determine if additional treatment can be provided.
- Make adjustments depending on the amount of sediment in the water being pumped.
- Repair and/or replace any equipment that does not function as designed.
- The accumulated sediment which is removed during maintenance must be spread on-site and stabilized or disposed of at an approved disposal site.
- Systems should be filled-in or otherwise removed when permanent dewatering controls are in place and connected to an approved treatment and receiving system.

5.1.8. BMP C1.45: Solid Waste Handling and Disposal

5.1.8.1. Description

Methods used to protect stormwater from pollution associated with the management, handling and disposal of all solid waste generated on a construction site.

5.1.8.2. Purpose

Solid waste is one of the major pollutants caused by construction and can have direct impacts to stormwater as a potential pollutant if not managed and disposed of properly. Solid waste includes the following:

- Trees and shrubs removed during land clearing
- Wood and paper used in packaging and building materials
- Scrap metals and metal shavings
- Sanitary wastes
- Rubber, plastic and glass pieces
- Masonry products
- Leftover food, food containers, beverage cans, coffee cups, lunch wrapping paper, aluminum foil, and plastic
- Cigarette packages and butts

5.1.8.3. Conditions Where Practice Applies

All construction sites.

5.1.8.4. Planning Considerations

The major control mechanism for these pollutants is to provide adequate disposal facilities.

5.1.8.5. Design Criteria

- Remove garbage frequently to maintain construction sites in a clean and attractive manner. Remove and dispose of accumulated solid waste at authorized disposal areas.
- Label waste containers and locate them in a covered area. Keep lids closed at all times.
- Salvage and recycle any useful materials. For example:
    - Masonry waste can be used for filling borrow pits.
    - Trees and brush from land-clearing operations can be converted into woodchips through mechanical chippers and then used as mulch in graded areas.
- Selective (rather than wholesale) removal of trees is helpful in conservation of soil and reduction of wood wastes. Avoid indiscriminate removal of trees and other beneficial vegetation.

5.1.8.6. Maintenance

- Soil erosion and sediment control structures capture much of the solid waste from construction sites. Frequently remove litter from these structures to reduce the amount of solid waste despoiling the landscape.

5.1.9. BMP C1.50: Disposal of Asbestos and Polychlorinatedbiphenols (PCBs)

Use and disposal of these potential pollutants are regulated by both state and federal agencies. For further information, contact:

- For asbestos:
    - Puget Sound Clean Air Agency (www.pscleanair.org/) (206) 343-8800 or toll-free (800) 552-3565
    - U.S. EPA (www.epa.gov/asbestos/) (206) 553-1200 or toll-free (800) 424-4EPA
- For wastes containing PCBs:
    - Washington Department of Ecology, Hazardous Waste Section: (206) 449-6687
    - U.S. EPA (http://www.epa.gov/ebtpages/pollchemicalspolychlorinatedbiphenylspcbs.html) (206) 553-1200 or toll-free (800) 424-4EPA

5.1.10. BMP C1.55: Airborne Debris Curtain

5.1.10.1. Description

Using plastic or other material to create a vertical barrier, or curtain, around a building or other structure undergoing exposed construction or cleaning activities to minimize the spread of airborne debris.

5.1.10.2. Purpose

Activities related to exposed building construction, repair, or cleaning include spraying, pressure washing, surface preparation, sand blasting, paint removal, sanding, and painting. If conducted outdoors, all of these activities are associated with a high risk for contaminating water resources.

Potential pollutants include spent fire retardants, abrasive grits, solvents, oils, washwater, paint overspray, cleaners and detergents, paint chips, glass fibers, and dust. Pollutant constituents include suspended solids, oils and greases, organic compounds, copper, lead, tin, and zinc.

5.1.10.3. Conditions Where Practice Applies

This BMP should be implemented when spraying, blasting, sanding, or washing outdoors.

5.1.10.4. Planning Considerations

- Relocate maintenance and repair activities that can be moved indoors to reduce the potential for direct pollution of stormwater.
- Evaluate disposal methods for spent abrasives, cleaners, etc.
- Consider using no soaps or detergents. Brush the exterior surface with water only.

Despite what is on the label, the term biodegradable does not mean that the product is safe or environmentally friendly. Some cleaning products may degrade eventually, but is still harmful to the environment.

5.1.10.5. Design Criteria

- Use fixed platforms with appropriate plastic or tarpaulin barriers as work surfaces and for containment when work is performed near a receiving water. This helps to prevent material or overspray from coming into contact with stormwater or the receiving water.
- Use sanders that have dust-containment bags and avoid sanding in windy conditions.
- Store materials such as paints, tools, and ground cloths indoors or in a covered area when not in use.
- Contain blasting and spraying activities by hanging tarpaulins to block the wind and prevent dust and overspray from escaping. Do not perform uncontained spray painting,

blasting, or sanding activities over open water without proper protection (e.g., overspray collection, drop clothes, booms).

- Use plywood and/or plastic sheeting to cover open areas when sandblasting.
- During painting, finishing, or sand blasting, use ground cloths to collect drips, spills, paint chips, and used blasting sand.
- Avoid collecting debris in areas subject to foot or vehicular traffic to control tracking.

5.1.10.6. Maintenance

- Collect spent abrasives and other waste materials regularly. Contain and store them under cover until they can be disposed of properly.
- At least once each week or more often as needed, sweep and clean ground surface areas. Do not hose them down. Properly dispose of the collected materials.
- Use one of the following treatment BMPs when paint chips or blasting grit are present in the work area:
    - Cleaning inlets and catch basins (BMP E3.65)
    - Street sweeping and vacuuming (BMP E3.70)
    - Storm drain inlet protection (BMP E3.25); Use filtration with media designed for the pollutants present.

Catch basin filters only remove solids and do not provide treatment for other pollutants associated with some building cleaning activities.

5.1.11. BMP C1.56: Concrete Handling and Disposal

5.1.11.1. Description

Methods for control, containment, removal and disposal of concrete materials and waste products to prevent contamination of storm drains, open ditches, or critical areas, such as water bodies and wetlands. Concrete work includes storing, mixing, pouring, placing, finishing, removing, saw cutting or clean-up of concrete materials, the slurry or process water associated with these activities, and the proper construction of a contained area on a project site where concrete and concrete wastewater and washout may be stored for later disposal.

5.1.11.2. Purpose

Prevent or reduce the discharge of fine particles and high pH from concrete materials.

5.1.11.3. Conditions Where Practice Applies

Anytime concrete is used, removed or disposed of, including, but not limited to placement and maintenance of curbs, sidewalks, roads, bridges, foundations, floors, runways. Anytime cured or uncured concrete is used, removed or disposed of, or water that has come in contact with uncured concrete is present, it must be disposed of properly. Activities that use, remove or dispose of concrete include, but are not limited to, sawing slurry, coring, grinding, roughening, hydro-demolition, bridge and road surfacing.

5.1.11.4. Planning Considerations

Sawcutting and surfacing operations generate slurry and process water that contains fine particles and high pH (concrete cutting), both of which can violate the water quality standards in the receiving water. Concrete spillage or concrete discharge to receiving waters is prohibited. Use this BMP to minimize and eliminate process water and slurry created through sawcutting or surfacing from entering waters of the state. Utilize these management practices anytime sawcutting or surfacing operations take place.

Washwater and stormwater that has contacted uncured cement will become high pH waters, which must be collected and treated before release to the storm system. Concrete should not be placed during heavy rain events.

Refer to BMP C1.59 for pH adjustments requirements. Refer to the Construction Stormwater General Permit for pH monitoring requirements if the project involves one of the following activities:

- Significant concrete work (greater than 1,000 cubic yards poured concrete or recycled concrete used over the life of a project)
- The use of engineered soils amended with (but not limited to) Portland cement-treated base, cement kiln dust or fly ash
- Discharge of stormwater to receiving waters on the 303(d)list (Category 5) for high pH

Education:

- Discuss the concrete management techniques described in this BMP with the ready-mix concrete supplier before any deliveries are made.
- Educate employees and subcontractors on the concrete waste management techniques described in this BMP.
- Arrange for contractor's superintendent or CESCL to oversee and enforce concrete waste management procedures.
- Install a sign adjacent to each temporary concrete washout facility to inform concrete equipment operators about utilizing the proper facilities.

Contracts:

Incorporate requirements for concrete waste management into concrete supplier and subcontractor agreements.

5.1.11.5. Design Criteria

- Always use forms or solid barriers for concrete pours, such as pilings within 15 feet of receiving waters.
- Return unused concrete remaining in the truck and pump to the originating batch plant for recycling. Do not dump excess concrete on site, except in designated concrete washout areas.
- Ensure that washout of concrete trucks is performed off-site or in designated concrete washout areas. If washout is done on-site, wash out concrete truck chutes, pumps, and internals into formed areas only. Do not wash out concrete trucks onto the ground, or into storm drains, open ditches, streets, or streams.
- Concrete washout areas may be prefabricated concrete washout containers, or self-installed structures (above-grade or below-grade).
- Prefabricated containers are most resistant to damage and protect against spills and leaks. Companies may offer delivery service and provide regular maintenance and disposal of solid and liquid waste.
- Approximately 7 gallons of washwater are used to wash one truck chute.
- Approximately 50 gallons are used to wash out the hopper of a concrete pump truck.
- Washout facilities shall be maintained to provide adequate holding capacity with a minimum freeboard of 12 inches.
- Washout facilities must be cleaned, or new facilities must be constructed and ready for use once the washout is 75 percent full.
- If the washout is nearing capacity, vacuum and dispose of the waste material in an approved manner.

***Note**: If less than 10 concrete trucks or pumpers need to be washed out on site, the washwater may be disposed of in a formed area awaiting concrete or an upland disposal site where it will not contaminate surface or groundwater. The upland disposal site shall be at least 50 feet from critical areas such as storm drains, open ditches, or water bodies, including wetlands.*

- Vacuum slurry and cuttings during cutting and surfacing operations. Do not leave them on permanent concrete or asphalt pavement overnight. Do not allow slurry and cuttings to drain to any natural or constructed drainage conveyance including stormwater systems. This may require temporarily blocking catch basins. Dispose of collected slurry and cuttings in a manner that does not violate ground water or surface water quality standards.
- Do not allow process water generated during hydro-demolition, surface roughening or similar operations to drain to any natural or constructed drainage conveyance including stormwater systems. Dispose process water in a manner that does not violate ground water or surface water quality standards.
- Wash off hand tools including, but not limited to, screeds, shovels, rakes, floats, and trowels into formed areas only.
- Handle and dispose cleaning waste material and demolition debris in a manner that does not cause contamination of water. Dispose of sweeping material from a pick-up sweeper at an appropriate disposal site.
- Wash equipment difficult to move, such as concrete pavers, in areas that do not directly drain to natural or constructed stormwater conveyances.
- Do not allow washdown from areas, such as concrete aggregate driveways, to drain directly to natural or constructed stormwater conveyances.
- Contain washwater and leftover product in a lined container when no formed areas are available. Dispose of contained concrete in a manner that does not violate groundwater or surface water quality standards.

Design Criteria for Washout Areas:

Location and Placement:

- Locate washout area at least 50 feet from storm drains, open ditches, or critical areas, such as water bodies and wetlands.
- Allow convenient access for concrete trucks, preferably near the area where the concrete is being poured.
- If trucks need to leave a paved area to access washout, prevent track-out with a pad of rock or quarry spalls (refer to BMP E2.10). These areas should be far enough away from other construction traffic to reduce the likelihood of accidental damage and spills.

- The number of facilities you install should depend on the expected demand for storage capacity.
- On large sites with extensive concrete work, washouts should be placed in multiple locations for ease of use by concrete truck drivers.
- The following steps will help reduce stormwater pollution from concrete wastes:
    - Do not allow excess concrete to be dumped on-site, except in designated concrete washout areas.
    - If self-installed concrete washout areas are used, below-grade structures are preferred over above-grade structures because they are less prone to spills and leaks. Self-installed above-grade structures should only be used if excavation is not practical.

On-site Temporary Concrete Washout Facility, Transit Truck Washout Procedures:

- Locate temporary concrete washout facilities a minimum of 50 feet from critical areas including storm drain inlets, open drainage facilities, and receiving waters. Refer to Figures 20a, 20b, and 20c.
- Construct and maintain concrete washout facilities in sufficient quantity and size to contain all liquid and concrete waste generated by washout operations.
- Perform washout of concrete trucks in designated areas only.
- Concrete washout from concrete pumper bins can be washed into concrete pumper trucks and discharged into designated washout area or properly disposed of off site.
- Once concrete wastes are washed into the designated area and allowed to harden, break up, remove and dispose of the concrete per applicable solid waste regulations. Dispose of hardened concrete on a regular basis.

Temporary Above-Grade Concrete Washout Facility:

- Construct temporary concrete washout facilities (type above grade) (refer to Figures 20a, 20b, and 20c), with a recommended minimum length and minimum width of 10 feet, but with sufficient quantity and volume to contain all liquid and concrete waste generated by washout operations.
- Use plastic lining material that is a minimum of 10 mil polyethylene sheeting and free of holes, tears, or other defects that compromise the impermeability of the material.

Temporary Below-Grade Concrete Washout Facility:

- Construct temporary concrete washout facilities (type below grade) (refer to Figure 20a) with a recommended minimum length and minimum width of 10 feet. The quantity and volume should be sufficient to contain all liquid and concrete waste generated by washout operations.
- Use commercial type lath and flagging.

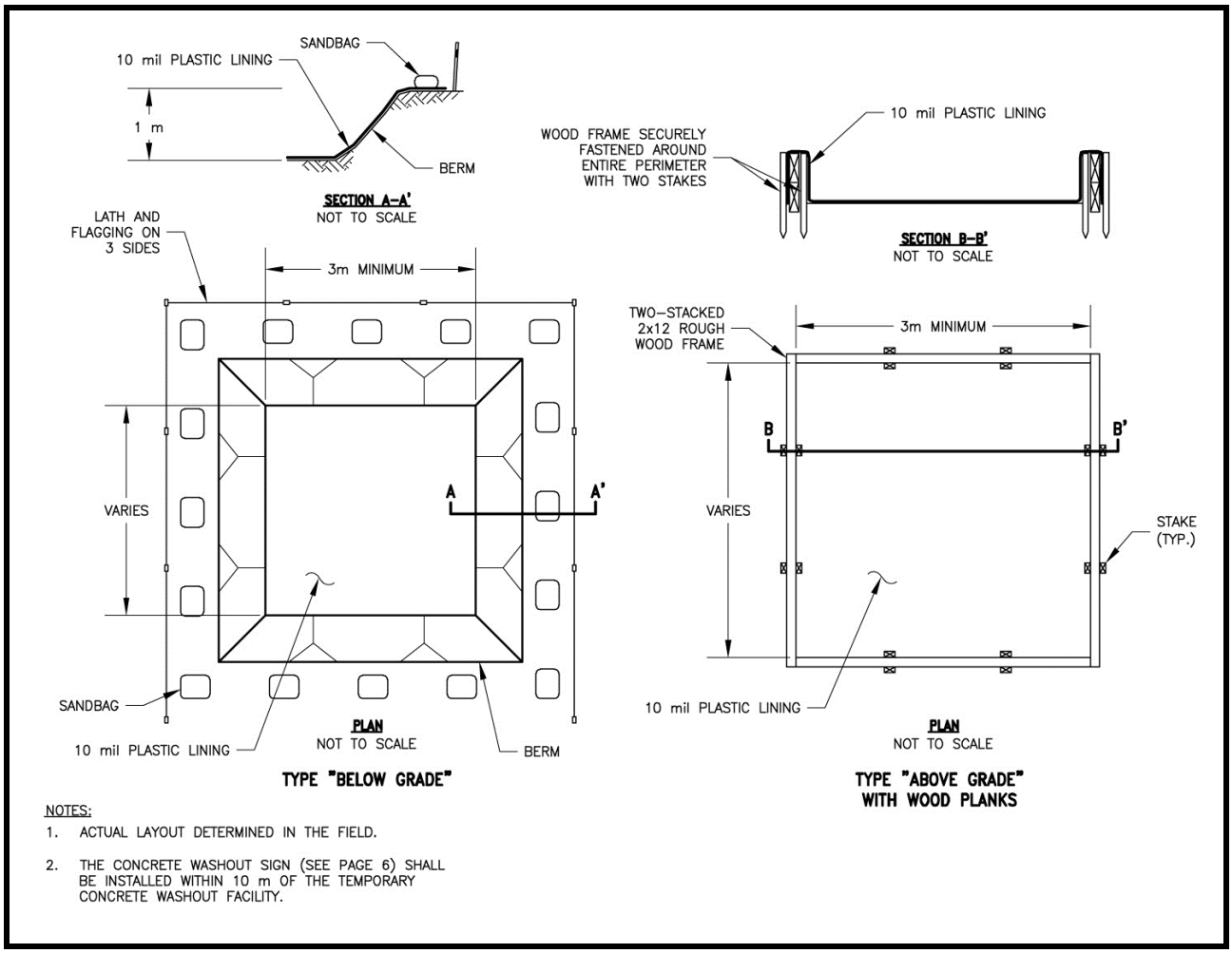

Figure 20a. Concrete Washout Area.

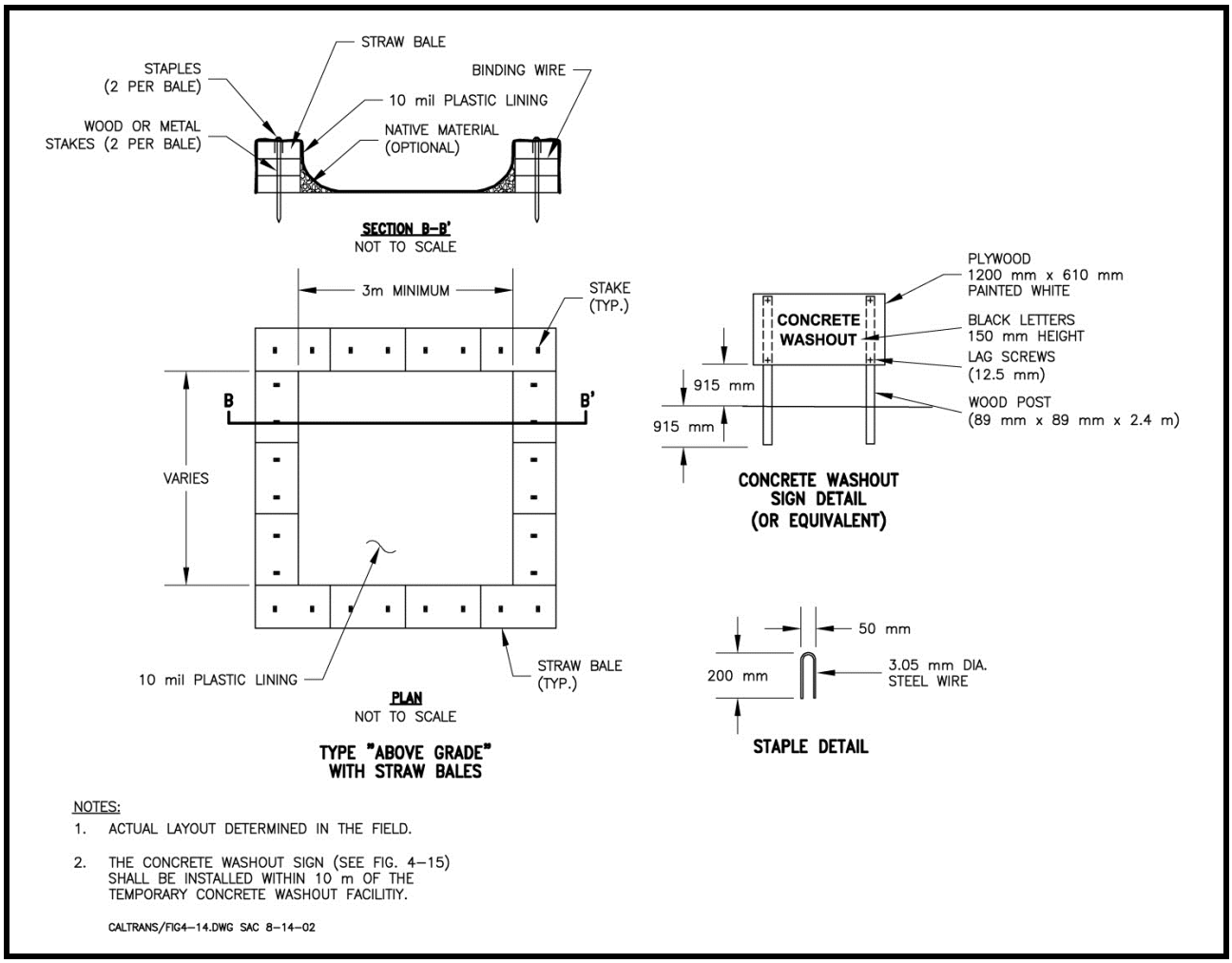

Figure 20b. Concrete Washout Area.

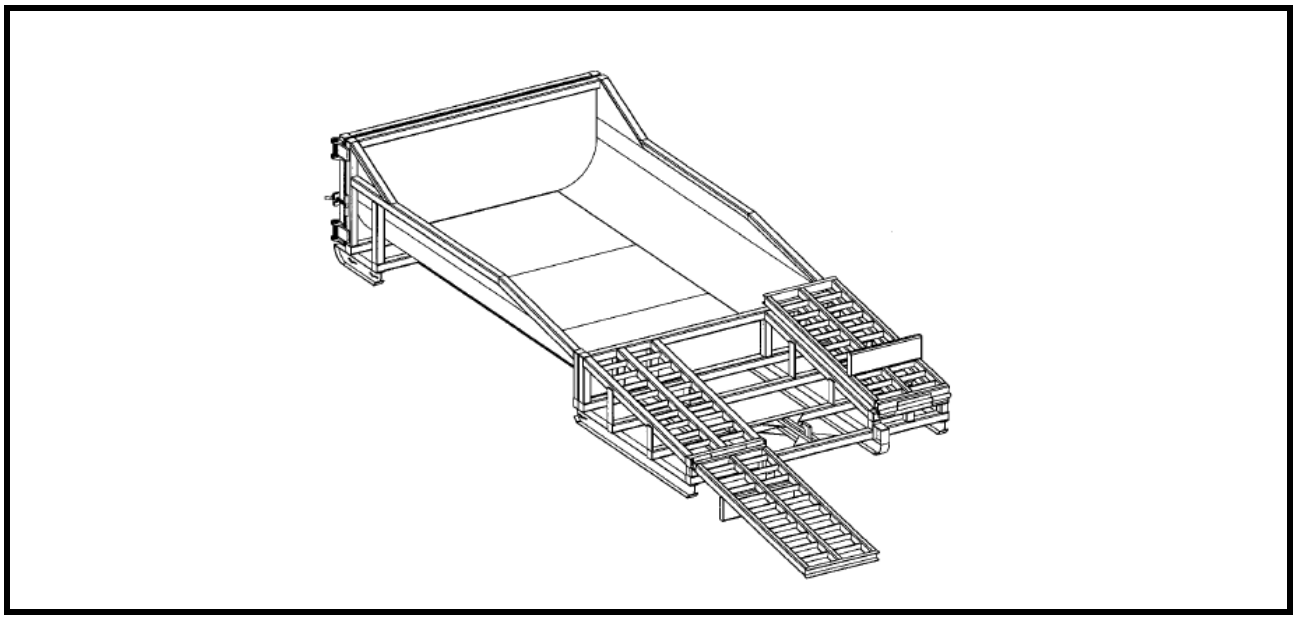

Figure 20c. Prefabricated Concrete Washout Container with Ramp.

- Use plastic lining material that is a minimum of 10 mil polyethylene sheeting and free of holes, tears, or other defects that compromise the impermeability of the material.
- Install liner seams shall in accordance with manufacturers' recommendations.
- Prepare soil base so that it is free of rocks or other debris that may cause tears or holes in the plastic lining material.

5.1.11.6. Maintenance

- Check containers for holes in the liner daily during concrete pours and repair the same day.
- Continually monitor operations to determine whether slurry, cuttings, or process water could enter waters of the state. If inspections show that a violation of water quality standards could occur, stop operations and immediately implement preventive measures such as berms, barriers, secondary containment, and vacuum trucks.
- Inspect and verify that concrete washout BMPs are in place prior to the commencement of concrete work.
- During periods of concrete work, inspect daily to verify continued performance.
- Check overall condition and performance.
- Check remaining capacity (% full).
- If using self-installed washout facilities, verify plastic liners are intact and sidewalls are not damaged.
- If using prefabricated containers, check for leaks.
- Do not discharge liquid or slurry to receiving waters, drainage channels, storm drains or directly onto ground.
- Do not use sanitary sewer without King County Industrial Waste Program approval.
- Place a secure, non-collapsing, non-water collecting cover over the concrete washout facility prior to a predicted wet weather to prevent accumulation and overflow of precipitation.
- Remove and dispose of hardened concrete and return the structure to a functional condition. Concrete may be reused on-site or hauled away for disposal or recycling.
- When removing materials from the self-installed concrete washout, build a new structure; or, if the previous structure is still intact, inspect for signs of weakening or damage, and make any necessary repairs. Re-line the structure with new plastic after each cleaning.

Removal of Temporary Concrete Washout Facilities:

- When temporary concrete washout facilities are no longer required for the work, remove and properly dispose of the hardened concrete, slurries and liquids.
- Remove and dispose of or recycle materials used to construct temporary concrete washout facilities.
- Backfill, repair and stabilize holes, depressions or other ground disturbance caused by the removal of the temporary concrete washout facilities to prevent erosion.

5.1.12. BMP C1.59: High pH Neutralization Using CO_2

5.1.12.1. Description

Methods for neutralization of high pH water prior to discharge into the drainage system or receiving waters.

5.1.12.2. Purpose

When pH levels in stormwater rise above 8.5 it is necessary to lower the pH levels to the acceptable range of 6.5 to 8.5, this process is called pH neutralization. pH neutralization involves the use of solid or compressed carbon dioxide gas in water requiring neutralization (CO_2 Sparging). Neutralized stormwater may be discharged to receiving waters under the General Construction NPDES permit.

Neutralized process water such as concrete truck wash-out, hydro-demolition, or saw-cutting slurry must be managed to prevent discharge to receiving waters. Any stormwater contaminated during concrete work is considered process wastewater and must not be discharged to receiving waters.

Reason for pH Neutralization:

A pH level range of 6.5 to 8.5 is typical for most natural watercourses, and this neutral pH is required for the survival of aquatic organisms. Should the pH rise or drop out of this range, fish and other aquatic organisms may become stressed and may die.

Calcium hardness can contribute to high pH values and cause toxicity that is associated with high pH conditions. A high level of calcium hardness in waters of the state is not allowed.

The water quality standard for pH in Washington State is in the range of 6.5 to 8.5. The groundwater standard for calcium and other dissolved solids in Washington State is less than 500 mg/l.

5.1.12.3. Conditions Where Practice Applies

Causes of High pH:

High pH at construction sites is most commonly caused by the contact of stormwater with poured or recycled concrete, cement, mortars, and other construction materials containing Portland cement or lime. (Refer to BMP C1.56: Concrete Handling for more information on concrete handling procedures.) The principal caustic agent in cement is calcium hydroxide (free lime).

Advantages of CO_2 Sparging:

- Rapidly neutralizes high pH water
- Cost effective and safer to handle than acid compounds
- CO_2 is self-buffering. It is difficult to overdose and create harmfully low pH levels
- Material is readily available

The Chemical Process:

When carbon dioxide (CO_2) is added to water (H_2O), carbonic acid (H_2CO_3) is formed which can further dissociate into a proton (H+) and a bicarbonate anion (HCO_{3-}) as shown below:

$$CO_2 + H_2O \leftrightarrow H2CO_3 \leftrightarrow H+ + HCO_{3-}$$

The free proton is a weak acid that can lower the pH. Water temperature has an effect on the reaction as well. The colder the water temperature is the slower the reaction occurs and the warmer the water temperature is the quicker the reaction occurs. Most construction applications in Washington State have water temperatures in the 50°F or higher range so the reaction is almost simultaneous.

5.1.12.4. Design Criteria

Treatment Process:

High pH water may be treated using continuous treatment, continuous discharge systems. These manufactured systems continuously monitor influent and effluent pH to ensure that pH values are within an acceptable range before being discharged. All systems must have fail safe automatic shut off switches in the event that pH is not within the acceptable discharge range. Only trained operators may operate manufactured systems. System manufacturers often provide trained operators or training on their devices.

The following procedure may be used when not using a continuous discharge system:

1. Make every effort to isolate the potential high pH water in order to treat it separately from other stormwater on-site.
2. Store water in an acceptable storage facility, detention pond, or containment cell prior to treatment.
3. Transfer water to be treated to the treatment structure. Ensure that treatment structure size is sufficient to hold the amount of water that is to be treated. Do not fill tank completely, allow at least 2 feet of freeboard.
4. Sample the water for pH and note the clarity of the water. Generally, less CO_2 is necessary for clearer water. Record this information in the stormwater treatment logbook.
5. In the pH adjustment structure, add CO_2 until the pH falls in the range of 6.9 to 7.1. Remember that pH water quality standards apply so adjusting pH to within 0.2 pH units of receiving water (background pH) is recommended. It is unlikely that pH can be adjusted to within 0.2 pH units using dry ice. Compressed carbon dioxide gas should be introduced to the water using a carbon dioxide diffuser located near the bottom of the tank, this will allow carbon dioxide to bubble up through the water and diffuse more evenly.
6. Slowly discharge the water making sure water does not get stirred up in the process. Release about 80 percent of the water from the structure leaving any sludge behind.

7. Discharge treated water through a pond or drainage system.
8. Excess sludge needs to be disposed of properly as concrete waste. If several batches of water are undergoing pH treatment, sludge can be left in the treatment structure for the next batch treatment. Dispose of sludge when it fills 50 percent of tank volume.

Sites that must implement flow control for the developed site must also control stormwater release rates during construction. All treated stormwater must go through a flow control facility before being released to receiving waters which require flow control.

Maintenance Standards

Safety and Materials Handling:

- Handle all equipment in accordance with Occupational Safety and Health Administration (OSHA) rules and regulations
- Follow manufacturer guidelines for materials handling

Operator Records:

Each operator should provide:

- A diagram of the monitoring and treatment equipment
- A description of the pumping rates and capacity the treatment equipment is capable of treating

Each operator should keep a written record of the following:

- Client name and phone number
- Date of treatment
- Weather conditions
- Project name and location
- Volume of water treated
- pH of untreated water
- Amount of CO_2 needed to adjust water to a pH range of 6.9 to 7.1
- pH of treated water
- Discharge point location and description

A copy of this record should be given to the project proponent/owner/contractor who should retain the record for 3 years.

CHAPTER 6 – REFERENCES

Council of Tree and Landscape Appraisers. 2000. Guide for Plant Appraisal. 9th Edition. 143 pp.