Protecting Seattle's Waterways

# Volume 3: Project Stormwater Control

CITY OF SEATTLE
STORMWATER MANUAL

FINAL DRAFT
SEPTEMBER 2015

**Note:**
Some pages in this document have been purposely skipped or blank pages inserted so that this document will copy correctly when duplexed.

| | |
|---|---|
| DPD | **Director's Rule 21-2015** |
| SPU | **Director's Rule DWW-200** |

| | | |
|---|---|---|
| **Applicant:**<br><br>Department of Planning & Development<br>Seattle Public Utilities | **Page:**<br><br>1 of ### | **Supersedes:**<br><br>**DPD**: 15-2009, 16-2009, 17-2009, 18-2009, 13-2010, 15-2012, 16-2012<br>**SPU**: 2009-003, 2009-004, 2009-005, 2009-006, 2010-005, DWW-201.1, DWW-201.2 |
| | **Publication:**<br>MM/DD/YYYY | **Effective:**<br>MM/DD/YYYY |
| **Subject:**<br><br>Stormwater Manual<br>Volumes 1 to 5<br>Appendixes A to I | **Code and Section Reference:**<br>SMC 22.800-22.808 | |
| | **Type of Rule:**<br>Code interpretation | |
| | **Ordinance Authority:**<br>#.##.### | |
| **Index:**<br><br>Title 22.800 Stormwater Code | **Approved:** **Date:**<br><br>Diane M. Sugimura, Director, DPD | |
| | **Approved:** **Date:**<br><br>Ray Hoffman, Director, SPU | |

# Contents

CHAPTER 1 – Introduction ..... 1-1

1.1. Purpose of this Volume ..... 1-1
1.2. How to Use this Volume ..... 1-1

CHAPTER 2 – BMP Categories ..... 2-1

2.1. Introduction ..... 2-1
2.2. Soil Amendment ..... 2-2
2.3. Tree Planting and Retention ..... 2-2
2.4. Dispersion BMPs ..... 2-2
2.5. Infiltration BMPs ..... 2-3
2.6. Rainwater Harvesting BMPs ..... 2-3
2.7. Alternative Surface BMPs ..... 2-4
2.8. Detention BMPs ..... 2-4
2.9. Non-infiltrating BMPs ..... 2-4

CHAPTER 3 – BMP Selection and Sizing Approach ..... 3-1

3.1. Determine Dispersion Feasibility ..... 3-2
3.2. Determine Infiltration Feasibility ..... 3-4
3.3. BMP Selection for On-site Stormwater Management ..... 3-14
3.3.1. On-site List Approach ..... 3-14
3.3.2. On-site Performance Standard ..... 3-16
3.4. BMP Selection for Flow Control ..... 3-17
3.5. BMP Selection for Water Quality Treatment ..... 3-19
3.5.1. Selection Steps ..... 3-19
3.5.2. Treatment Performance Goals and BMP Options ..... 3-23
3.5.2.1. Oil Control Treatment ..... 3-23
3.5.2.2. Phosphorus Treatment ..... 3-24
3.5.2.3. Enhanced Treatment ..... 3-24
3.5.2.4. Basic Treatment ..... 3-26

CHAPTER 4 – General Design Requirements ..... 4-1

4.1. Sizing Approach ..... 4-2
4.1.1. On-site List Approach ..... 4-2
4.1.2. Pre-sized Approach ..... 4-3
4.1.2.1. Pre-sized Facilities ..... 4-3
4.1.2.2. Pre-sized Credits ..... 4-3
4.1.2.3. Pre-sized Calculator ..... 4-4
4.1.3. Modeling Approach ..... 4-5
4.1.3.1. On-site Performance Standard ..... 4-5
4.1.3.2. Flow Control ..... 4-5
4.1.3.3. Water Quality Treatment ..... 4-6

4.2. Bypass General Design Requirements ..... 4-7
4.2.1. On-line vs. Offline Treatment BMPs ..... 4-7
4.2.2. Bypassing Flows Entering or Leaving a Site ..... 4-7
4.2.2.1. Scenario 1 – Managing Flows Entering a Site ..... 4-7
4.2.2.2. Scenario 2 – Managing Flows Entering a Site ..... 4-8
4.2.2.3. Scenario 3 – Uncontrolled Flows Leaving the Site ..... 4-8
4.3. Conveyance General Design Requirements ..... 4-9
4.3.1. Conveyance Design and Capacity Analysis ..... 4-9
4.3.2. Approved Point of Discharge ..... 4-10
4.3.2.1. Requirements for Projects with No Offsite Point of Discharge ..... 4-10
4.3.3. Conveyance Systems to Point of Discharge ..... 4-11
4.3.4. Overflow Requirements ..... 4-12
4.4. Presettling and Pretreatment Requirements ..... 4-13
4.4.1. Description ..... 4-13
4.4.2. Performance Mechanisms ..... 4-13
4.4.3. Applicability ..... 4-14
4.4.3.1. Presettling and Pretreatment ..... 4-14
4.4.3.2. Pretreatment ..... 4-15
4.4.4. Site Considerations ..... 4-17
4.4.5. Design Criteria ..... 4-17
4.4.6. Operations and Maintenance Requirements ..... 4-17
4.5. Infiltration BMPs ..... 4-18
4.5.1. Infiltration BMP Sizing ..... 4-18
4.5.2. Soil Requirements for Water Quality Treatment ..... 4-18
4.5.2.1. Underlying Soil Requirements for Infiltration BMPs ..... 4-19
4.5.2.2. Imported Soil Requirements for Bioretention Systems ..... 4-19

CHAPTER 5 – BMP Design ..... 5-1

5.1. Soil Amendment BMP ..... 5-2
5.1.1. Description ..... 5-2
5.1.2. Performance Mechanisms ..... 5-2
5.1.3. Applicability ..... 5-2
5.1.4. Site Considerations ..... 5-3
5.1.5. Design Criteria ..... 5-3
5.1.5.1. Implementation Options ..... 5-3
5.1.5.2. Soil Retention ..... 5-4
5.1.5.3. Soil Quality ..... 5-5
5.1.5.4. Soil Management Plan ..... 5-6
5.1.6. BMP Sizing ..... 5-6
5.1.7. Minimum Construction Requirements ..... 5-6
5.1.8. Operations and Maintenance Requirements ..... 5-7
5.2. Tree Planting and Retention ..... 5-8
5.2.1. Description ..... 5-8
5.2.2. Performance Mechanisms ..... 5-8
5.2.3. Applicability ..... 5-8

5.2.4. Site Considerations ..... 5-8
5.2.4.1. Retained Trees ..... 5-8
5.2.4.2. Newly Planted Trees ..... 5-9
5.2.5. Design Criteria ..... 5-9
5.2.5.1. Retained Trees ..... 5-9
5.2.5.2. Newly Planted Trees ..... 5-10
5.2.6. BMP Credits ..... 5-11
5.2.6.1. Credit for On-site List Approach ..... 5-11
5.2.6.2. Pre-Sized Approach for Flow Control ..... 5-12
5.2.6.3. Modeling Approach for On-site Performance Standard and Flow Control ..... 5-12
5.2.7. Minimum Construction Requirements ..... 5-12
5.2.8. Operations and Maintenance Requirements ..... 5-12
5.3. Dispersion BMPs ..... 5-14
5.3.1. Design Requirements for Dispersion BMPs ..... 5-14
5.3.1.1. General Site Considerations ..... 5-14
5.3.1.2. General Design Criteria for Dispersion Flowpaths ..... 5-14
5.3.2. Full Dispersion ..... 5-16
5.3.3. Splashblock Downspout Dispersion ..... 5-17
5.3.3.1. Description ..... 5-17
5.3.3.2. Performance Mechanisms ..... 5-17
5.3.3.3. Applicability ..... 5-17
5.3.3.4. Site Considerations ..... 5-17
5.3.3.5. Design Criteria ..... 5-17
5.3.3.6. BMP Credits ..... 5-20
5.3.3.7. Minimum Construction Requirements ..... 5-21
5.3.3.8. Operations and Maintenance Requirements ..... 5-21
5.3.4. Trench Downspout Dispersion ..... 5-22
5.3.4.1. Description ..... 5-22
5.3.4.2. Performance Mechanisms ..... 5-22
5.3.4.3. Applicability ..... 5-22
5.3.4.4. Site Considerations ..... 5-22
5.3.4.5. Design Criteria ..... 5-22
5.3.4.6. BMP Credits ..... 5-25
5.3.4.7. Minimum Construction Requirements ..... 5-25
5.3.4.8. Operations and Maintenance Requirements ..... 5-26
5.3.5. Sheet Flow Dispersion ..... 5-27
5.3.5.1. Description ..... 5-27
5.3.5.2. Performance Mechanisms ..... 5-27
5.3.5.3. Applicability ..... 5-27
5.3.5.4. Site Considerations ..... 5-27
5.3.5.5. Design Criteria ..... 5-27
5.3.5.6. BMP Credits ..... 5-29
5.3.5.7. Minimum Construction Requirements ..... 5-30
5.3.5.8. Operations and Maintenance Requirements ..... 5-30

5.3.6. Concentrated Flow Dispersion ..... 5-31
5.3.6.1. Description ..... 5-31
5.3.6.2. Performance Mechanisms ..... 5-31
5.3.6.3. Applicability ..... 5-31
5.3.6.4. Site Considerations ..... 5-31
5.3.6.5. Design Criteria ..... 5-31
5.3.6.6. BMP Credits ..... 5-34
5.3.6.7. Minimum Construction Requirements ..... 5-35
5.3.6.8. Operations and Maintenance Requirements ..... 5-35
5.4. Infiltration BMPs ..... 5-36
5.4.1. General Considerations for Infiltration BMPs ..... 5-37
5.4.2. Infiltration Trenches ..... 5-38
5.4.2.1. Description ..... 5-38
5.4.2.2. Performance Mechanisms ..... 5-38
5.4.2.3. Applicability ..... 5-38
5.4.2.4. Site Considerations ..... 5-38
5.4.2.5. Design Criteria ..... 5-38
5.4.2.6. BMP Credits ..... 5-42
5.4.2.7. Minimum Construction Requirements ..... 5-44
5.4.2.8. Operations and Maintenance Requirements ..... 5-45
5.4.3. Drywells ..... 5-46
5.4.3.1. Description ..... 5-46
5.4.3.2. Performance Mechanisms ..... 5-46
5.4.3.3. Applicability ..... 5-46
5.4.3.4. Site Considerations ..... 5-46
5.4.3.5. Design Criteria ..... 5-46
5.4.3.6. BMP Sizing ..... 5-49
5.4.3.7. Minimum Construction Requirements ..... 5-50
5.4.3.8. Operations and Maintenance Requirements ..... 5-51
5.4.4. Infiltrating Bioretention ..... 5-52
5.4.4.1. Description ..... 5-52
5.4.4.2. Performance Mechanisms ..... 5-52
5.4.4.3. Applicability ..... 5-52
5.4.4.4. Site Considerations ..... 5-53
5.4.4.5. Design Criteria ..... 5-53
5.4.4.6. BMP Sizing ..... 5-67
5.4.4.7. Minimum Construction Requirements ..... 5-72
5.4.4.8. Operations and Maintenance Requirements ..... 5-73
5.4.5. Rain Gardens ..... 5-74
5.4.5.1. Description ..... 5-74
5.4.5.2. Performance Mechanisms ..... 5-74
5.4.5.3. Applicability ..... 5-74
5.4.5.4. Site Considerations ..... 5-75
5.4.5.5. Design Criteria ..... 5-75
5.4.5.6. BMP Sizing ..... 5-81

5.4.5.7. Minimum Construction Requirements .....5-82
5.4.5.8. Operations and Maintenance Requirements.....5-82
5.4.6. Permeable Pavement Facilities .....5-83
5.4.6.1. Description .....5-83
5.4.6.2. Performance Mechanisms .....5-83
5.4.6.3. Applicability.....5-83
5.4.6.4. Site Considerations.....5-84
5.4.6.5. Design Criteria .....5-85
5.4.6.6. BMP Sizing .....5-94
5.4.6.7. Minimum Construction Requirements .....5-98
5.4.6.8. Operations and Maintenance Requirements.....5-98
5.4.7. Perforated Stub-out Connections .....5-99
5.4.7.1. Description .....5-99
5.4.7.2. Performance Mechanisms .....5-99
5.4.7.3. Applicability.....5-99
5.4.7.4. Site Considerations.....5-99
5.4.7.5. Design Criteria .....5-99
5.4.7.6. BMP Credits..... 5-101
5.4.7.7. Minimum Construction Requirements ..... 5-102
5.4.7.8. Operations and Maintenance Requirements..... 5-102
5.4.8. Infiltration Basins..... 5-103
5.4.8.1. Description ..... 5-103
5.4.8.2. Performance Mechanisms ..... 5-103
5.4.8.3. Applicability..... 5-103
5.4.8.4. Site Considerations..... 5-103
5.4.8.5. Design Criteria ..... 5-103
5.4.8.6. BMP Sizing ..... 5-103
5.4.8.7. Minimum Construction Requirements ..... 5-103
5.4.8.8. Operations and Maintenance Requirements..... 5-104
5.4.9. Infiltration Chambers ..... 5-105
5.4.9.1. Description ..... 5-105
5.4.9.2. Performance Mechanisms ..... 5-105
5.4.9.3. Applicability..... 5-105
5.4.9.4. Site Considerations..... 5-105
5.4.9.5. Design Criteria ..... 5-105
5.4.9.6. BMP Sizing ..... 5-106
5.4.9.7. Minimum Construction Requirements ..... 5-107
5.4.9.8. Operations and Maintenance Requirements..... 5-107
5.5. Rainwater Harvesting BMPs..... 5-108
5.5.1. Rainwater Harvesting..... 5-109
5.5.1.1. Description ..... 5-109
5.5.1.2. Performance Mechanisms ..... 5-109
5.5.1.3. Applicability..... 5-109
5.5.1.4. Site Considerations..... 5-109
5.5.1.5. Design Criteria ..... 5-110
5.5.1.6. BMP Sizing ..... 5-112

5.5.1.7. Minimum Construction Requirements ..... 5-115
5.5.1.8. Operations and Maintenance Requirements ..... 5-115
5.5.2. Single Family Residential (SFR) Cisterns ..... 5-116
5.5.2.1. Description ..... 5-116
5.5.2.2. Performance Mechanisms ..... 5-116
5.5.2.3. Applicability ..... 5-116
5.5.2.4. Site Considerations ..... 5-116
5.5.2.5. Design Criteria ..... 5-116
5.5.2.6. BMP Sizing ..... 5-118
5.5.2.7. Minimum Construction Requirements ..... 5-119
5.5.2.8. Operations and Maintenance Requirements ..... 5-119
5.6. Alternative Surface BMPs ..... 5-120
5.6.1. Vegetated Roof Systems ..... 5-121
5.6.1.1. Description ..... 5-121
5.6.1.2. Performance Mechanisms ..... 5-122
5.6.1.3. Applicability ..... 5-122
5.6.1.4. Site Considerations ..... 5-122
5.6.1.5. Approach ..... 5-122
5.6.1.6. BMP Credits ..... 5-125
5.6.1.7. Minimum Construction Requirements ..... 5-126
5.6.1.8. Operations and Maintenance Requirements ..... 5-126
5.6.2. Permeable Pavement Surfaces ..... 5-127
5.6.2.1. Description ..... 5-127
5.6.2.2. Performance Mechanisms ..... 5-127
5.6.2.3. Applicability ..... 5-127
5.6.2.4. Site Considerations ..... 5-127
5.6.2.5. Design Criteria ..... 5-128
5.6.2.6. BMP Sizing ..... 5-131
5.6.2.7. Minimum Construction Requirements ..... 5-133
5.6.2.8. Operations and Maintenance Requirements ..... 5-133
5.7. Detention BMPs ..... 5-136
5.7.1. Detention Ponds ..... 5-137
5.7.1.1. Description ..... 5-137
5.7.1.2. Performance Mechanisms ..... 5-137
5.7.1.3. Applicability ..... 5-137
5.7.1.4. Site Considerations ..... 5-137
5.7.1.5. Design Criteria ..... 5-138
5.7.1.6. BMP Sizing ..... 5-139
5.7.1.7. Minimum Construction Requirements ..... 5-139
5.7.1.8. Operations and Maintenance Requirements ..... 5-140
5.7.2. Detention Pipes ..... 5-141
5.7.2.1. Description ..... 5-141
5.7.2.2. Performance Mechanisms ..... 5-141
5.7.2.3. Applicability ..... 5-141
5.7.2.4. Site Considerations ..... 5-141
5.7.2.5. Design Criteria ..... 5-141

5.7.2.6. BMP Sizing ..... 5-144
5.7.2.7. Minimum Construction Requirements ..... 5-146
5.7.2.8. Operations and Maintenance Requirements ..... 5-146
5.7.3. Detention Vaults ..... 5-147
5.7.3.1. Description ..... 5-147
5.7.3.2. Performance Mechanisms ..... 5-147
5.7.3.3. Applicability ..... 5-147
5.7.3.4. Site Considerations ..... 5-147
5.7.3.5. Design Criteria ..... 5-147
5.7.3.6. BMP Sizing ..... 5-150
5.7.3.7. Minimum Construction Requirements ..... 5-151
5.7.3.8. Operations and Maintenance Requirements ..... 5-151
5.7.4. Detention Cisterns ..... 5-152
5.7.4.1. Description ..... 5-152
5.7.4.2. Performance Mechanisms ..... 5-152
5.7.4.3. Applicability ..... 5-152
5.7.4.4. Site Considerations ..... 5-152
5.7.4.5. Design Criteria ..... 5-152
5.7.4.6. BMP Sizing ..... 5-154
5.7.4.7. Minimum Construction Requirements ..... 5-156
5.7.4.8. Operations and Maintenance Requirements ..... 5-156
5.7.5. Other Detention Options ..... 5-157
5.7.5.1. Use of Parking Lots for Additional Detention ..... 5-157
5.7.5.2. Use of Roofs for Detention ..... 5-157
5.8. Non-infiltrating BMPs ..... 5-158
5.8.1. Design Requirements for Non-infiltrating BMPs ..... 5-158
5.8.1.1. Site and Design Considerations ..... 5-158
5.8.2. Non-infiltrating Bioretention ..... 5-160
5.8.2.1. Description ..... 5-160
5.8.2.2. Performance Mechanisms ..... 5-160
5.8.2.3. Applicability ..... 5-160
5.8.2.4. Site Considerations ..... 5-161
5.8.2.5. Design Criteria ..... 5-161
5.8.2.6. BMP Sizing ..... 5-162
5.8.2.7. Minimum Construction Requirements ..... 5-165
5.8.2.8. Operations and Maintenance Requirements ..... 5-165
5.8.3. Biofiltration Swales ..... 5-166
5.8.3.1. Description ..... 5-166
5.8.3.2. Performance Mechanisms ..... 5-166
5.8.3.3. Applicability ..... 5-166
5.8.3.4. Site Considerations ..... 5-167
5.8.3.5. Design Criteria ..... 5-168
5.8.3.6. BMP Sizing ..... 5-172
5.8.3.7. Minimum Construction Requirements ..... 5-172
5.8.3.8. Operations and Maintenance Requirements ..... 5-173

5.8.4. Filter Strips/Drains ..... 5-174
5.8.4.1. Description ..... 5-174
5.8.4.2. Performance Mechanisms ..... 5-174
5.8.4.3. Applicability ..... 5-174
5.8.4.4. Site Considerations ..... 5-175
5.8.4.5. Design Criteria ..... 5-175
5.8.4.6. BMP Sizing ..... 5-176
5.8.4.7. Minimum Construction Requirements ..... 5-176
5.8.4.8. Operations and Maintenance Requirements ..... 5-177
5.8.5. Sand Filters ..... 5-178
5.8.5.1. Description ..... 5-178
5.8.5.2. Performance Mechanisms ..... 5-178
5.8.5.3. Applicability ..... 5-178
5.8.5.4. Site Considerations ..... 5-179
5.8.5.5. Design Criteria ..... 5-180
5.8.5.6. BMP Sizing ..... 5-183
5.8.5.7. Minimum Construction Requirements ..... 5-187
5.8.5.8. Operations and Maintenance Requirements ..... 5-187
5.8.6. Wet Ponds ..... 5-188
5.8.6.1. Description ..... 5-188
5.8.6.2. Performance Mechanisms ..... 5-188
5.8.6.3. Applicability ..... 5-188
5.8.6.4. Site Considerations ..... 5-188
5.8.6.5. Design Criteria ..... 5-189
5.8.6.6. BMP Sizing ..... 5-192
5.8.6.7. Minimum Construction Requirements ..... 5-192
5.8.6.8. Operations and Maintenance Requirements ..... 5-192
5.8.7. Wet Vaults ..... 5-193
5.8.7.1. Description ..... 5-193
5.8.7.2. Performance Mechanisms ..... 5-193
5.8.7.3. Applicability ..... 5-193
5.8.7.4. Site Considerations ..... 5-193
5.8.7.5. Design Criteria ..... 5-194
5.8.7.6. BMP Sizing ..... 5-198
5.8.7.7. Minimum Construction Requirements ..... 5-198
5.8.7.8. Operations and Maintenance Requirements ..... 5-198
5.8.8. Stormwater Treatment Wetlands ..... 5-199
5.8.8.1. Description ..... 5-199
5.8.8.2. Performance Mechanisms ..... 5-199
5.8.8.3. Applicability ..... 5-199
5.8.8.4. Site Considerations ..... 5-199
5.8.8.5. Design Criteria ..... 5-199
5.8.8.6. BMP Sizing ..... 5-200
5.8.8.7. Minimum Construction Requirements ..... 5-200
5.8.8.8. Operations and Maintenance Requirements ..... 5-200

5.8.9. Combined Detention and Wet Pool Facilities ..... 5-201
5.8.9.1. Description ..... 5-201
5.8.9.2. Performance Mechanisms ..... 5-201
5.8.9.3. Applicability ..... 5-201
5.8.9.4. Site Considerations ..... 5-202
5.8.9.5. Design Criteria ..... 5-202
5.8.9.6. BMP Sizing ..... 5-202
5.8.9.7. Minimum Construction Requirements ..... 5-202
5.8.9.8. Operations and Maintenance Requirements ..... 5-203
5.8.10. Oil/Water Separators ..... 5-204
5.8.10.1. Description ..... 5-204
5.8.10.2. Performance Mechanisms ..... 5-204
5.8.10.3. Applicability ..... 5-204
5.8.10.4. Site Considerations ..... 5-205
5.8.10.5. Design Criteria ..... 5-206
5.8.10.6. BMP Sizing ..... 5-211
5.8.10.7. Minimum Construction Requirements ..... 5-213
5.8.10.8. Operations and Maintenance Requirements ..... 5-213
5.8.11. Proprietary and Emerging Water Quality Treatment Technologies ..... 5-214
5.8.11.1. Description ..... 5-214
5.8.11.2. Performance Mechanisms ..... 5-215
5.8.11.3. Applicability and Restrictions ..... 5-215
5.8.11.4. Site Considerations ..... 5-216
5.8.11.5. Design Criteria ..... 5-216
5.8.11.6. BMP Sizing ..... 5-217
5.8.11.7. Minimum Construction Requirements ..... 5-218
5.8.11.8. Operations and Maintenance Requirements ..... 5-219

CHAPTER 6 – References ..... 6-1

# Tables

Table 3.1. Minimum Investigation and Testing Requirements for Shallow Infiltration BMPs. ....3-10
Table 3.2. Minimum Investigation and Testing Requirements for Deep Infiltration BMPs. ....3-11
Table 3.3. Minimum Measured Infiltration Rates. ....3-12
Table 3.4. Flow Control BMPs and Applicable Standards. ....3-18
Table 3.5. Zoning categorization and TSS characteristics. ....3-19
Table 3.6. Treatment Trains for Phosphorus Treatment. ....3-24
Table 3.7. Treatment Trains for Enhanced Treatment. ....3-25
Table 4.1. Presettling and Pretreatment Requirements. ....4-14
Table 5.1. Minimum Soil Volume for Trees in Planters. ....5-10
Table 5.2. Flow Control Credits for Retained Trees. ....5-12
Table 5.3. Flow Control Credits for Newly Planted Trees. ....5-12
Table 5.4. Flow Control Credits for Splashblock Downspout Dispersion. ....5-21
Table 5.5. Continuous Modeling Assumptions for Downspout Dispersion. ....5-21
Table 5.6. Flow Control Credits for Trench Downspout Dispersion. ....5-25
Table 5.7. Flow Control Credits for Sheet Flow Dispersion. ....5-29
Table 5.8. Continuous Modeling Assumptions for Sheet Flow Dispersion. ....5-30
Table 5.9. Flow Control Credits for Concentrated Flow Dispersion. ....5-34
Table 5.10. Continuous Modeling Assumptions for Concentrated Flow Dispersion. ....5-35
Table 5.11. On-site List Sizing for Infiltration Trenches. ....5-42
Table 5.12. Sizing Factors for Infiltration Trenches. ....5-43
Table 5.13. Continuous Modeling Assumptions for Infiltration Trench Facilities. ....5-44
Table 5.14. On-site List Sizing for Drywells. ....5-49
Table 5.15. Sizing Factors for Drywells. ....5-50
Table 5.16. Presettling Requirements for Bioretention Facilities in Roadway Projects. ....5-58
Table 5.17. Presettling Requirements for Bioretention Facilities in Non-Roadway Projects. ....5-59
Table 5.18. On-site List Sizing for Infiltrating Bioretention with and without Underdrains. ....5-68
Table 5.19. Sizing Factors for Infiltrating Bioretention without Underdrains. ....5-70
Table 5.20. Sizing Factors for Infiltrating Bioretention with Underdrains. ....5-71
Table 5.21. Continuous Modeling Assumptions for Infiltrating Bioretention. ....5-72
Table 5.22. On-site List Sizing for Rain Gardens. ....5-82

Table 5.23. Comparison of Permeable Pavement Facilities and Surfaces. .....5-83
Table 5.24. On-site List Sizing for Permeable Pavement Facilities without Underdrains. .....5-95
Table 5.25. Sizing Factors for Permeable Pavement Facilities without Underdrains. .....5-96
Table 5.26. Continuous Modeling Assumptions for Permeable Pavement Facility. .....5-97
Table 5.27. Continuous Modeling Assumptions for Infiltration Chambers. ..... 5-107
Table 5.28. Typical Assumptions for Non-Potable Rainwater Demand Calculations. ..... 5-113
Table 5.29. Typical Assumptions for Potable Rainwater Demand Calculations. ..... 5-114
Table 5.30. Continuous Modeling Assumptions for Rainwater Harvesting. ..... 5-115
Table 5.31. On-site List Sizing for SFR Cisterns. ..... 5-119
Table 5.32. Flow Control Credits for Vegetated Roofs. ..... 5-125
Table 5.33. Continuous Modeling Assumptions for Vegetated Roof Systems. ..... 5-126
Table 5.34. Credits for Permeable Pavement Surfaces without Check Dams. ..... 5-132
Table 5.35. Modeling Methods for Permeable Pavement Surfaces. ..... 5-133
Table 5.36. Continuous Modeling Assumptions for Permeable Pavement Surface (Explicit Representation). ..... 5-134
Table 5.37. Continuous Modeling Assumptions for Permeable Pavement Surface (Land Cover Approximation). ..... 5-135
Table 5.38. Detention Pipe Material and Bedding Specifications ..... 5-143
Table 5.39. Sizing Equations for Detention Pipe. ..... 5-145
Table 5.40. Continuous Modeling Assumptions for Detention Pipe. ..... 5-145
Table 5.41. Sizing Equations for Detention Vaults. ..... 5-150
Table 5.42. Continuous Modeling Assumptions for Detention Vaults. ..... 5-151
Table 5.43. Sizing Equations for Aboveground Detention Cisterns. ..... 5-155
Table 5.44. Non-infiltrating BMP Placement in Relation to Detention BMP. ..... 5-159
Table 5.45. On-site List Sizing for Non-infiltrating Bioretention. ..... 5-163
Table 5.46. Sizing Factors for Non-infiltrating Bioretention. ..... 5-164
Table 5.47. Basic and Compost Amended Vegetated Filter Strip Design and Sizing Criteria. ..... 5-176
Table 5.48. Sand Filter Design Parameters. ..... 5-184
Table 5.49. Sand Filter Area Increments for Various Soil and Cover Types. ..... 5-185
Table 5.50. Sand Filter Design and Sizing Criteria. ..... 5-187

# Figures

Figure 3.1. Infiltration Feasibility. ..... 3-5
Figure 3.2. Water Quality Treatment BMP Selection Flow Chart. ..... 3-22
Figure 5.1. Cross-section of Soil Amendment. ..... 5-4
Figure 5.2. Typical Downspout Splashblock Dispersion. ..... 5-18
Figure 5.3. Typical Downspout Splashblock and Dispersion Trench Plan. ..... 5-19
Figure 5.4. Typical Downspout Dispersion Trench. ..... 5-23
Figure 5.5. Typical Sheet Flow Dispersion for Flat and Moderately Sloping Driveways. ..... 5-28
Figure 5.6. Typical Concentrated Flow Dispersion for Steep Driveways. ..... 5-32
Figure 5.7. Typical Infiltration Trench Receiving Concentrated Flow. ..... 5-40
Figure 5.8. Typical Infiltration Trench Receiving Sheet Flow. ..... 5-41
Figure 5.9. Typical Infiltration Drywell. ..... 5-47
Figure 5.10. Infiltrating Bioretention Facility with Sloped Sides (without Underdrain). ..... 5-54
Figure 5.11. Infiltrating Bioretention Facility with Vertical Sides (without Underdrain). ..... 5-54
Figure 5.12. Infiltrating Bioretention Facility with Sloped Sides (with Underdrain). ..... 5-55
Figure 5.13. Infiltrating Bioretention Facility with Vertical Sides (with Underdrain). ..... 5-55
Figure 5.14. Typical Rain Garden. ..... 5-76
Figure 5.15. Permeable Pavement Facility. ..... 5-86
Figure 5.16. Typical Permeable Pavement Facility with Checkdams. ..... 5-87
Figure 5.17. Perforated Stub-Out Connection. ..... 5-100
Figure 5.18. Detention Cistern with Harvesting Capacity for Single Family Residential Projects Only. ..... 5-117
Figure 5.19. Vegetated Roof System. ..... 5-121
Figure 5.20. Permeable Pavement Surface. ..... 5-129
Figure 5.21. Typical Detention Vault. ..... 5-148
Figure 5.22. Detention Cistern. ..... 5-153
Figure 5.23. Non-infiltrating Bioretention Facility with Sloped Sides. ..... 5-161
Figure 5.24. Non-infiltrating Bioretention Facility with Vertical Sides. ..... 5-162
Figure 5.25. Biofiltration Swale Plan and Profile. ..... 5-169
Figure 5.26. Typical Wet Vault. ..... 5-195
Figure 5.27. Typical API (Baffle Type) Separator. ..... 5-207
Figure 5.28. Typical Coalescing Plate Separator. ..... 5-208

# CHAPTER 1 – INTRODUCTION

## 1.1. Purpose of this Volume

Volume 3 (*Project Stormwater Control*) of the City of Seattle Stormwater Manual presents approved methods, requirements, criteria, details, and general guidance for analysis and design of on-site stormwater management, flow control, and water quality treatment pursuant to the Seattle Municipal Code (SMC), Chapter 22.800 – 22.808, the Stormwater Code.

This volume describes and provides technical requirements for selecting, designing, constructing, and maintaining best management practices (BMPs) required by the Stormwater Code. These BMPs are designed to reduce the flow rates or volumes of stormwater runoff, reduce the level of pollutants contained in that runoff, and convey stormwater runoff. In accordance with provisions of the Stormwater Code, additional BMPs beyond those specified in this volume may be required.

## 1.2. How to Use this Volume

- *Chapter 1* (this chapter) outlines the purpose and content of this volume.
- *Chapter 2* describes the BMP categories.
- *Chapter 3* describes the steps required to select appropriate BMPs after the minimum requirements for on-site stormwater management, flow control, and/or water quality treatment have been determined using *Volume 1.*
- *Chapter 4* provides general design requirements on the following:
  - On-site List Approach, Pre-sized Approach, and Modeling Approach
  - Information pertinent to bypass and conveyance design
  - Presettling and pretreatment requirements
  - Infiltration BMP sizing requirements
  - *Chapter 5* provides detailed descriptions and design criteria for BMPs outlined in *Chapter 2*
  - Several appendices also support the information contained in this volume. These appendices include:
    - *Appendix A* – Definitions
    - *Appendix C* – On-site Stormwater Management BMP Infeasibility Criteria
    - *Appendix D* – Subsurface Investigation and Infiltration Testing for Infiltration BMPs
    - *Appendix E* – Additional Design Requirements
    - *Appendix F* – Hydrologic Analysis and Design

- *Appendix G* – Stormwater Control Operations and Maintenance Requirements
- *Appendix H* – Financial Feasibility Documentation for Vegetated Roofs and Rainwater Harvesting

# CHAPTER 2 – BMP CATEGORIES

## 2.1. Introduction

BMPs are designed to reduce the flow rates or volumes of stormwater runoff, reduce the level of pollutants contained in that runoff, and convey stormwater runoff. BMPs include structural stormwater facilities that provide long-term management of stormwater at developed sites. This volume covers four primary functional categories of stormwater BMPs:

- On-site stormwater management includes BMPs designed to reduce runoff volume and pollutants from development using infiltration, dispersion, and retention of stormwater runoff on-site.
- Flow control BMPs typically detain, retain, or infiltrate stormwater runoff to control the flow rate, frequency, duration, and sometimes the volume of stormwater runoff leaving the site.
- Water quality treatment BMPs remove pollutants through one or more of the following processes: gravity settling of particulate pollutants, filtration, biological processes, and/or adsorption. Target pollutants include:
    - Sand, silt, and other suspended solids
    - Metals such as copper, lead, and zinc
    - Nutrients (e.g., nitrogen and phosphorus)
    - Certain bacteria and viruses
    - Organic contaminants such as petroleum hydrocarbons and pesticides
    - Water quality treatment in this volume is divided into the following four categories based on the type of pollutant removal provided: basic treatment, enhanced treatment, oil treatment, or phosphorus treatment. Additional details on these treatment categories are provided in *Section 3.5*.
- Conveyance BMPs are designed to transport stormwater and can incorporate additional functions such as flow control or water quality treatment.

Note that some BMPs fall under more than one functional category. Determining which BMPs to use for a given application will depend on the applicable Stormwater Code requirements (refer to *Volume 1*), as well as site-specific factors such as available land surface and infiltration capacity of the soils. Distributed BMPs using infiltration, filtration, storage, evapotranspiration or stormwater reuse are preferred, when feasible. Additional requirements for conveyance are described in the Side Sewer Code and associated rules.

To help further differentiate among the many functions, applications, and design requirements presented in this volume, the following sections describe eight subcategories of BMPs. BMPs are placed in one of the following subcategories based on their primary function:

1. Soil amendment BMP
2. Tree planting and retention
3. Dispersion BMPs
4. Infiltration BMPs
5. Rainwater harvesting BMPs
6. Alternative surface BMPs
7. Detention BMPs
8. Non-infiltrating BMPs
9. Each section contains a chart identifying the functional categories to which the BMP can be applied (to meet a requirement) and a reference to the section within this volume containing additional information.

## 2.2. Soil Amendment

Site soils shall meet the minimum quality and depth requirement at project completion (*Section 5.1*). Requirements may be achieved by either retaining and protecting undisturbed soil or restoring the soil (e.g., amending with compost) in disturbed areas.

## 2.3. Tree Planting and Retention

Tree planting and retention provides interception and evapotranspiration of stormwater.

| BMP | On-site | Flow Control | Water Quality | Conveyance | Reference |
|---|---|---|---|---|---|
| Tree planting and retention | ✓ | ✓ | | | *Section 5.2* |

## 2.4. Dispersion BMPs

Dispersion is a simple method of stormwater management that uses surface grading to avoid concentrating flows or to disperse flows over vegetation.

The dispersion BMPs described in this volume include:

| BMP | On-site | Flow Control | Water Quality | Conveyance | Reference |
|---|---|---|---|---|---|
| Full dispersion | ✓ | ✓ | | | *Section 5.3.2* |
| Splashblock downspout dispersion | ✓ | ✓ | | | *Section 5.3.3* |
| Trench downspout dispersion | ✓ | ✓ | | | *Section 5.3.4* |
| Sheet flow dispersion | ✓ | ✓ | | | *Section 5.3.5* |
| Concentrated dispersion | ✓ | ✓ | | | *Section 5.3.6* |

## 2.5. Infiltration BMPs

Infiltration BMPs are designed to facilitate percolation of stormwater into the ground. Infiltration is feasible only where sufficiently porous soils are available, and where other site constraints are not limiting (e.g., steep slopes, high groundwater) as detailed under *Section 3.2*.

The infiltration BMPs described in this volume include:

| BMP | On-site | Flow Control | Water Quality | Conveyance | Reference |
|---|---|---|---|---|---|
| Infiltration trenches | ✓ | ✓ | ✓[a] | | *Section 5.4.2* |
| Drywells | ✓ | ✓ | | | *Section 5.4.3* |
| Infiltrating bioretention | ✓ | ✓[b] | ✓ | ✓[c] | *Section 5.4.4* |
| Rain gardens | ✓ | | | ✓[c] | *Section 5.4.5* |
| Permeable pavement facilities | ✓ | ✓ | ✓[a] | | *Section 5.4.6* |
| Perforated stub-out connections | ✓ | | | | *Section 5.4.7* |
| Infiltration basins | | ✓ | ✓[a] | | *Section 5.4.8* |
| Infiltration chambers | ✓[d] | ✓ | ✓[a] | | *Section 5.4.9* |

[a] If soil suitability criteria are met (refer to *Section 4.5.2*).

[b] Bioretention cells with underdrains may be designed to meet the Peak Control Standard, but cannot achieve the Pre-developed Pasture Standard.

[c] Infiltrating bioretention and rain gardens may be connected in series, with the overflows of upstream cells directed to downstream cells to provide conveyance.

[d] Infiltration chambers are not included on the On-site List, but can be used to meet the On-site Performance Standard.

## 2.6. Rainwater Harvesting BMPs

Rainwater harvesting BMPs capture and store rainwater for beneficial use. Roof runoff may be routed to cisterns for storage and non-potable uses such as irrigation, toilet flushing, mechanical equipment, and cold water supply to laundry with basic filtration. Additional filtration and disinfection is required for use of collected roof runoff for potable use. Using collected roof run-off for potable use is only allowed for SFR projects. Design plans for use of harvested rainwater shall be prepared per *Rainwater Harvesting and Connection to Plumbing Fixtures* (Public Health – Seattle & King County 2011).

The rainwater harvesting BMPs described in this volume include:

| BMP | On-site | Flow Control | Water Quality | Conveyance | Reference |
|---|---|---|---|---|---|
| Rainwater harvesting | ✓ | ✓ | | ✓ | *Section 5.5.1* |
| Single Family Residential (SFR) cisterns | ✓ | | | ✓ | *Section 5.5.2* |

## 2.7. Alternative Surface BMPs

Alternative surface BMPs convert a conventional impervious surface to a surface that reduces the amount of stormwater runoff and also provides flow control.

The alternative surface BMPs described in this volume include:

| BMP | On-site | Flow Control | Water Quality | Conveyance | Reference |
|---|---|---|---|---|---|
| Vegetated roof systems | ✓ | ✓ | | | *Section 5.6.1* |
| Permeable pavement surfaces[a] | ✓ | ✓[b] | ✓[b, c] | | *Section 5.6.2* |

[a] While similar to permeable pavement "facilities" (refer to *Section 2.5*), permeable pavement "surfaces" are designed to function as a permeable land surface and not intended to receive runoff from other surfaces. Therefore, they are not considered infiltration facilities and have less onerous siting and design requirements.

[b] Infiltration testing is required to meet flow control and water quality treatment standards (refer to *Appendix D*).

[c] If soil suitability criteria are met (refer to *Section 4.5.2*).

## 2.8. Detention BMPs

Detention BMPs are designed to collect and temporarily store runoff, and then release it over a period of time at a reduced rate. Detention BMPs have an outlet control structure designed to release flows at an attenuated rate to meet flow control standards. Detention BMPs can also be combined with non-infiltrating BMPs to provide runoff treatment as well as flow control benefits. For a summary of combined detention and wet pool BMPs, refer to *Section 2.9*.

The detention BMPs described in this volume include:

| BMP | On-site | Flow Control | Water Quality | Conveyance | Reference |
|---|---|---|---|---|---|
| Detention ponds | | ✓ | | ✓ | *Section 5.7.1* |
| Detention pipes | | ✓ | | ✓ | *Section 5.7.2* |
| Detention vaults | | ✓ | | ✓ | *Section 5.7.3* |
| Detention cisterns | | ✓ | | ✓ | *Section 5.7.4* |
| Other detention options | | ✓ | | ✓ | *Section 5.7.5* |

## 2.9. Non-infiltrating BMPs

Non-infiltrating BMPs are designed to remove pollutants contained in stormwater runoff. Some non-infiltrating BMPs may provide low levels of flow control as a secondary benefit, or be combined with detention BMPs to meet flow control requirements.

Subcategories of non-infiltrating BMPs are presented below:

- Non-infiltrating Bioretention is similar to infiltrating bioretention (*Section 5.4.4*) except that facilities are designed with an impervious bottom and sidewalls preventing infiltration to underlying soil. After percolating through the bioretention soil, the

water is discharged via an underdrain. Non-infiltrating bioretention provides the following functions:

| BMP | On-site | Flow Control | Water Quality | Conveyance | Reference |
|---|---|---|---|---|---|
| Non-infiltrating Bioretention | ✓ | ✓[a] | ✓ | ✓[b] | *Section 5.8.2* |

[a] Bioretention cells with underdrains may be designed to meet the Peak Control Standard, but cannot achieve the Pre-developed Pasture or Pre-developed Forested Standard.

[b] Non-infiltrating bioretention may be connected in series, with the overflows of upstream cells directed to downstream cells to provide conveyance.

- Biofiltration Swales use vegetation in conjunction with slow and shallow-depth flow for runoff treatment. Biofiltration swales may also result in some incidental infiltration to underlying soils. Biofiltration swales described in this volume include:

| BMP | On-site | Flow Control | Water Quality | Conveyance | Reference |
|---|---|---|---|---|---|
| Basic biofiltration swale | | | ✓ | ✓ | *Section 5.8.3* |
| Wet biofiltration swale | | | ✓ | ✓ | *Section 5.8.3* |
| Continuous inflow biofiltration swale | | | ✓ | ✓ | *Section 5.8.3* |
| Compost-amended biofiltration swale | | | ✓ | ✓ | *Section 5.8.3* |

- Filter Strips/Drains are grassy slopes that receive unconcentrated runoff from adjacent hard surfaces such as a parking lots, driveways, or roadways. Filter strips are graded to maintain sheet flow over their entire width. Compost and other amendments can be incorporated into filter strip designs to provide enhanced treatment. Filter strip/drain BMPs described in this volume include:

| BMP | On-site | Flow Control | Water Quality | Conveyance | Reference |
|---|---|---|---|---|---|
| Basic filter strips | | | ✓ | ✓ | *Section 5.8.4* |
| Compost-amended vegetated filter strips (CAVFS) | | | ✓ | ✓ | *Section 5.8.4* |
| Media filter drains (MFD) | | | ✓ | ✓ | *Section 5.8.4* |

- Sand Filters pass stormwater through a constructed sand bed. Sand filters can be sized as either basic or large BMPs to meet different water quality objectives. The sand filter BMPs described in this volume include:

| BMP | On-site | Flow Control | Water Quality | Conveyance | Reference |
|---|---|---|---|---|---|
| Basic and large sand filter basins | | | ✓ | | *Section 5.8.5* |
| Sand filter vaults | | | ✓ | | *Section 5.8.5* |
| Linear sand filters | | | ✓ | | *Section 5.8.5* |

- Wet Ponds are constructed stormwater ponds that retain a permanent pool of water (i.e., a wet pool or dead storage) at least during the wet season. The wet pond BMPs described in this volume include:

| BMP | On-site | Flow Control | Water Quality | Conveyance | Reference |
|---|---|---|---|---|---|
| Wet ponds – basic and large | | | ✓ | ✓ | *Section 5.8.6* |

- Wet Vaults are drainage facilities that contain permanent pools of water that are filled during the initial runoff from a storm event. They are similar to wet ponds, except the facility is constructed below grade in a concrete (or similar) vault. The wet vault BMPs described in this volume include:

| BMP | On-site | Flow Control | Water Quality | Conveyance | Reference |
|---|---|---|---|---|---|
| Wet vaults | | | ✓ | ✓ | *Section 5.8.7* |

- Stormwater Treatment Wetlands are similar to wet ponds, but also provide a shallow marsh area to allow the establishment of emergent wetland aquatic plants, which improves pollutant removal. In land development situations, wetlands are usually constructed for two main reasons: to replace or mitigate impacts when natural wetlands are filled or impacted by development (mitigation wetlands) or to treat stormwater runoff (stormwater treatment wetlands). Mitigation wetlands may not be used as stormwater treatment facilities, because stormwater treatment functions are not compatible with normal wetland function. The stormwater treatment wetland BMPs described in this volume include:

| BMP | On-site | Flow Control | Water Quality | Conveyance | Reference |
|---|---|---|---|---|---|
| Stormwater treatment wetlands | | | ✓ | ✓ | *Section 5.8.8* |

- Combined Detention and Wet Pool Facilities provide a combination of runoff treatment and flow control. If combined, the wet pool portion of the facility can often be incorporated below the detention facility with little further loss of development area. Combined detention and wet pool facilities described in this volume include:

| BMP | On-site | Flow Control | Water Quality | Conveyance | Reference |
|---|---|---|---|---|---|
| Combined detention and wet pond | | ✓ | ✓ | ✓ | *Section 5.8.9* |
| Combined detention and wet vault | | ✓ | ✓ | ✓ | *Section 5.8.9* |
| Combined detention and stormwater wetland | | ✓ | ✓ | ✓ | *Section 5.8.9* |

- Oil/Water Separators remove floating and dispersed oil using gravity. Oil/water separators described in this volume include:

| BMP | On-site | Flow Control | Water Quality | Conveyance | Reference |
|---|---|---|---|---|---|
| American Petroleum Institute (API baffle type) oil/water separator | | | ✓ | | *Section 5.8.10* |
| Coalescing plate (CP) oil/water separator | | | ✓ | | *Section 5.8.10* |

Proprietary and Emerging Water Quality Treatment Technologies consist of technologies that are monitored in the state of Washington through the Technology Assessment Protocol – Ecology (TAPE) process. Upon completion of a monitoring program, the monitoring data is evaluated by Ecology and the technology may be approved for use for pretreatment, basic treatment, enhanced treatment, oil treatment, and/or phosphorus treatment. The following technologies have received General Use Level Designations (GULD) approval from Ecology at the time of publication and is provided as a reference. This list is subject to change. Refer to Ecology's website for a list of approved stormwater technologies, including uses and limitations and technologies currently under review (www.ecy.wa.gov/programs/WQ/stormwater/newtech/technologies.html). Refer to *Section 3.5* and *Section 5.8.11* for additional Seattle requirements for sizing proprietary technologies for annual maintenance.

| BMP | On-site | Flow Control | Water Quality | Conveyance | Reference |
|---|---|---|---|---|---|
| Bay Filter® | | | ✓ | | *Section 5.8.11* |
| ecoStorm plus® | | | ✓ | | *Section 5.8.11* |
| Filterra® | | | ✓ | | *Section 5.8.11* |
| FloGard Perk Filter® | | | ✓ | | *Section 5.8.11* |
| Media Filtration System® | | | ✓ | | *Section 5.8.11* |
| StormFilter® (ZPG Media) | | | ✓ | | *Section 5.8.11* |

# CHAPTER 3 – BMP SELECTION AND SIZING APPROACH

This chapter describes the steps for selecting appropriate stormwater BMPs and is organized into the following five sections:

- *Section 3.1* – Determine dispersion feasibility
- *Section 3.2* – Determine infiltration feasibility
- *Section 3.3* – BMP selection for on-site stormwater management
- *Section 3.4* – BMP selection for flow control
- *Section 3.5* – BMP selection for water quality treatment

Since dispersion and infiltration BMPs can serve multiple functions (on-site stormwater management, flow control, or water quality treatment), the process for evaluating feasibility for those types of BMPs is described first. Following the dispersion and infiltration feasibility determination are specific steps related to the minimum requirements (on-site stormwater management, flow control, and/or water quality treatment) that apply to a specific project. To determine which of these three minimum requirements apply to a project, refer to the 7-step approach in *Volume 1, Chapter 2*. Note that more than one, two, or all three of these minimum requirements may apply.

## 3.1. Determine Dispersion Feasibility

This section provides a two-step procedure for evaluating the feasibility of dispersion for a site (refer to *Section 2.4* for a list of dispersion BMPs).

Each of the following steps is outlined in more detail in the subsequent sections.

- **Step 1** – Evaluate horizontal setbacks and site constraints
- **Step 2** – Evaluate use of dispersion to meet minimum requirements

**Step 1: Evaluate horizontal setbacks and site constraints**

Assess the following to determine dispersion feasibility for the site:

Horizontal Setbacks

Horizontal setbacks vary depending on the type of dispersion BMP selected. Refer to the following sections for horizontal setback requirements:

- *Section 5.3.3* – Splashblock downspout dispersion
- *Section 5.3.4* – Trench downspout dispersion
- *Section 5.3.5* – Sheet flow dispersion
- *Section 5.3.6* – Concentrated flow dispersion

Site Constraints

- **Steep Slope or Landslide-prone Areas** – The dispersion flowpath is not typically permitted within landslide-prone area or within a setback of 10 times the height of the steep slope to a maximum of 500 feet above a steep slope area
- **Septic Systems and Drain Fields** – The dispersion flowpath is not permitted within 10 feet of proposed or existing septic system or drainfield
- **Contaminated Sites and Landfills –** The dispersion flowpath is not permitted within 100 feet of a contaminated site or landfill (active or closed)

Flow Path Requirements

Dispersion BMPs have minimum requirements for a vegetated flow path that can be difficult to achieve in an urban environment. Assess the following:

- **Full dispersion** – the hard surface flow path shall be directed over a minimum of 100 feet of vegetation
- **Sheet flow dispersion** – shall be directed over a minimum of 10 feet of vegetation
- Concentrated flow dispersion, trench downspout dispersion and splashblock downspout dispersion – shall be directed over a minimum of 25 feet of vegetation

### Step 2: Evaluate use of dispersion to meet minimum requirements

If dispersion is considered feasible for the site, evaluate the feasibility of individual dispersion BMPs (*Section 5.3*) when selecting BMPs in *Section 3.3* (on-site stormwater management), *Section 3.4* (flow control), and *Section 3.5* (water quality treatment).

## 3.2. Determine Infiltration Feasibility

This section provides step-by-step procedures for evaluating the feasibility of infiltration for a site and determining design infiltration rates for facility design. Refer to *Section 2.5* for a list of infiltration BMPs.

Each of the following steps is outlined in more detail in the subsequent sections.

- **Step 1**: Evaluate Infiltration Investigation Map
- **Step 2**: Evaluate horizontal setbacks and site constraints
- **Step 3**: Conduct subsurface investigation and evaluate vertical separation requirements
- **Step 4**: Conduct infiltration testing
- **Step 5**: Determine design infiltration rate
- **Step 6**: Conduct groundwater monitoring, receptor characterization, and mounding analysis, if applicable
- **Step 7**: Evaluate use of infiltration to meet minimum requirements

**Step 1: Evaluate Infiltration Investigation Map**

- Determine if Seattle has mapped the site as "infiltration investigation not required to meet the on-site stormwater management, flow control, or water quality treatment requirements". Based on some of the required setbacks and known infiltration restrictions, the City has mapped areas where infiltration is limited.
- If the site is within an area that is mapped, further infiltration investigation to meet the on-site stormwater management, flow control, or water quality treatment requirements is not required. Continue to select other non-infiltrating BMPs in *Section 3.3* (on-site stormwater management), *Section 3.4* (flow control), and *Section 3.5* (water quality treatment).

**Step 2: Evaluate Horizontal Setbacks and Site Constraints**

Evaluate the following criteria related to limitations, horizontal setbacks, and contaminated soil or groundwater. For any portion of the site that falls within an area that limits or restricts infiltration BMPs, further infiltration investigation to meet the on-site stormwater management, flow control, or water quality treatment requirements is not required. An infiltration feasibility flow chart is presented as Figure 3.1.

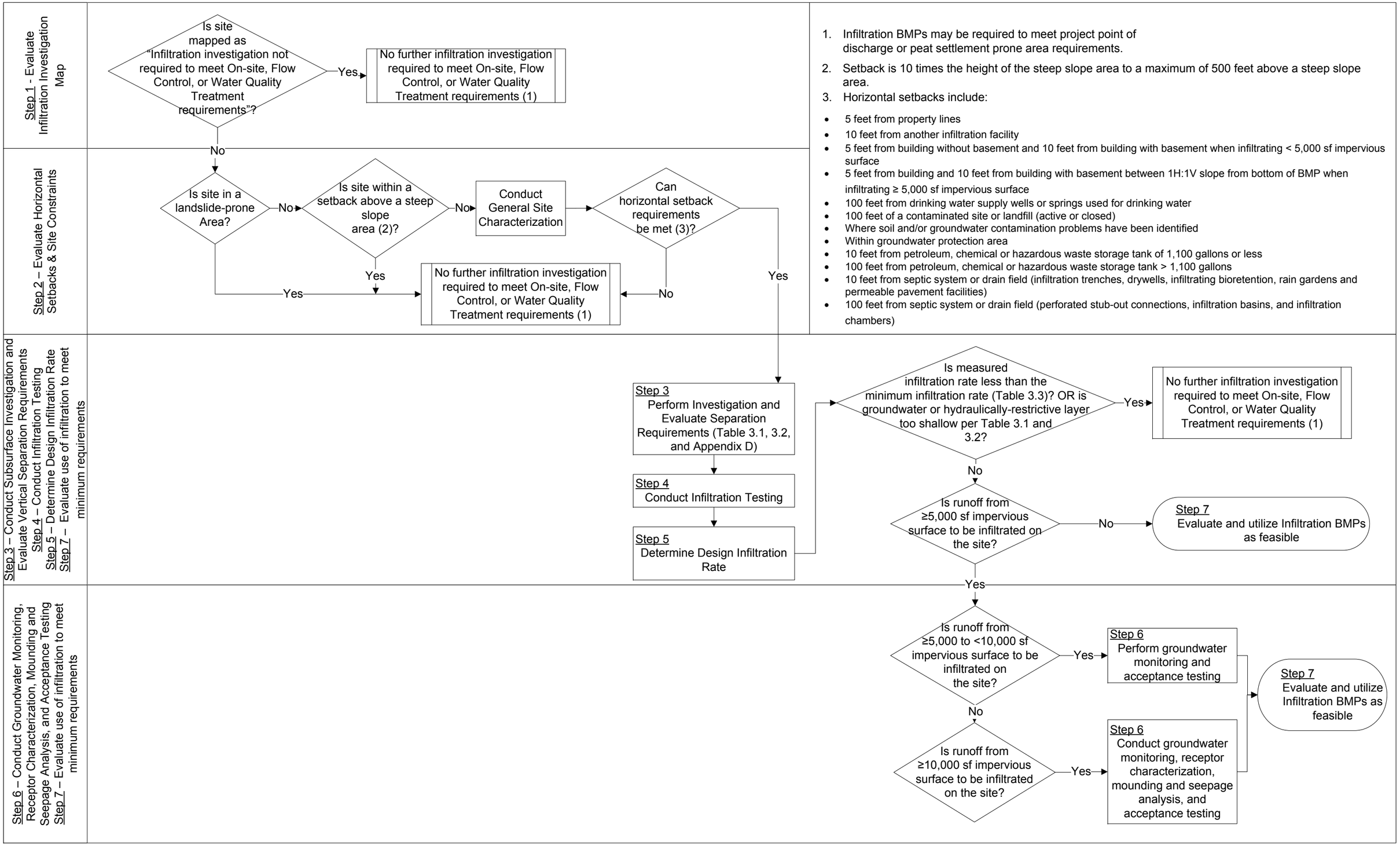


Figure 3.1. Infiltration Feasibility

Assess the following to determine infiltration feasibility for the site:

Horizontal Setbacks

For most infiltration BMPs, horizontal setbacks are measured from the vertical extent of maximum ponding before overflow. For bioretention and rain gardens, setback distances are as measured from the maximum vertical extent of the top of the bioretention soil or compost amended soil.

- Infiltration is not permitted in the following areas:
- Within 5 feet from property lines. As an exception, no setback is required from the property line abutting the public right-of-way.
- Within 10 feet of another infiltration facility.
- Within the following setbacks from onsite and offsite structures:
  - When runoff from less than 5,000 square feet of impervious surface area is infiltrated on the site, the infiltration BMP shall not be within 5 feet from a building without a basement and 10 feet from a building with a basement.
  - When runoff from 5,000 square feet or more of impervious surface area is infiltrated on the site, a building shall not intersect with a 1H:1V slope from the bottom edge of an infiltration BMP. The resulting setback shall be no less than 5 feet from a building without a basement and 10 feet from a building with a basement. For setbacks from buildings or structures on adjacent lots, potential buildings or structures should be considered for future build-out conditions.

Note:

- If development site is located within a peat settlement prone area, infiltration is required in order to achieve no net reduction in surface runoff volume that is infiltrated in the existing condition. Refer to SMC, Section 25.09.110.G.
- If development is located in an area with no offsite point of discharge (*Section 4.3.2.1*), infiltration may be feasible, but shall be designed by a licensed professional.
- Deviations from these site constraints and setbacks shall be approved by the Director and require a report stamped and signed by a licensed professional stating that the siting of an infiltration BMP within a setback will not cause an adverse impact to the public or the environment.
- The thresholds above are based on impervious surface area rather than hard surface area to exclude permeable pavement surfaces (non-infiltrating BMP) from the threshold.

Site Constraints

- **Steep Slope or Landslide-prone Areas** – Infiltration is limited within landslide-prone areas or within a setback of 10 times the height of the steep slope to a maximum of 500 feet above a steep slope area (as defined by the regulations for ECAs [SMC, Section 25.09.020]). Infiltration within this area may be feasible provided a detailed

slope stability analysis is completed by a licensed engineer or engineering geologist. The analysis shall determine the effects that infiltration would have on the landslide-prone or steep slope area and adjacent properties.

- **Septic Systems and Drain Fields** – Within 10 feet of proposed or existing septic systems or drain fields. (Applicable to infiltration trenches, drywells, infiltrating bioretention, rain gardens, and permeable pavement facilities.) Other infiltration BMPs (perforated stub-out connections, infiltration basins, and infiltration chambers) are not permitted within 100 feet of proposed or existing septic systems or drain fields.
- **Drinking Water Supply Wells or Springs –** Within 100 feet of drinking water supply wells or springs used for drinking water.
- **Groundwater Protection Area –** Within a groundwater protection area unless approved by the King County Department of Health and the Director. If approved, water quality treatment per *Section 4.5.2.2* (*Imported Soil Requirements for Bioretention Systems*) may be required.
- Contaminated Sites and Landfills
  - Within 100 feet of a contaminated site or landfill (active or closed). For projects where runoff from 5,000 square feet or more of impervious surface area will be infiltrated on the site, infiltration within 500 feet up-gradient or 100 feet down-gradient of a contaminated site or landfill (active or closed) requires analysis and approval by a licensed hydrogeologist.
  - Where soil and/or groundwater contamination problems have been identified, including, but not limited to, the following:
    - EPA Superfund Program site list (www.epa.gov/superfund/sites/index.htm)
    - EPA Resource Conservation and Recovery Act (RCRA) Program site list (www.epa.gov/epawaste/hazard/correctiveaction/facility/index.htm)
    - EPA mapping tool that plots the locations of Superfund and RCRA-regulated sites (www2.epa.gov/cleanups/cleanups-my-community)
    - Ecology regulated contaminated sites (www.ecy.wa.gov/fs)
    - Ecology Toxics Cleanup Program website (www.ecy.wa.gov/cleanup.html)
- Underground or Above Ground Storage Tanks
  - Within 10 feet of an underground or above ground storage tank or connecting underground pipes when the capacity of the tank and pipe system is 1,100 gallons or less. (Applicable to tanks used to store petroleum products, chemicals, or liquid hazardous wastes.)
  - Within 100 feet of an underground or above ground storage tank or connecting underground pipes when the capacity of the tank and pipe system is greater than 1,100 gallons. (Applicable to tanks used to store petroleum products, chemicals, or liquid hazardous wastes.)

### Step 3: Conduct Subsurface Investigation and Evaluate Vertical Separation Requirements

This manual includes four types of subsurface investigations:

- Simple subsurface investigation
- Standard subsurface investigation
- Comprehensive subsurface investigation
- Deep infiltration subsurface investigation

Subsurface investigation is required for the entire site or portion(s) of the site that have not been excluded based on information reviewed for Steps 1 and 2.

The type of subsurface investigation required for a project is provided in Table 3.1 and Table 3.2 and varies by the impervious surface area infiltrated on site. Subsurface investigation procedures are provided in *Appendix D*. If the infiltration testing is required to be performed by a licensed professional, then the subsurface investigation shall also be prepared by a licensed professional.

Projects shall document the results of the required subsurface investigation and evaluation of vertical separation requirements. The information to be contained in this report is provided in *Appendix D*.

Table 3.2 provides information for deep infiltration BMPs. Deep infiltration BMPs are typically used to direct stormwater past surface soil layers that have lower infiltration rates and into well-draining soil. The depth of the soil layers with lower infiltration rates can vary significantly, so the technique required to reach the well-draining soils will also vary.

<u>Subsurface Investigations</u>

Subsurface investigations are required to identify subsurface and groundwater conditions that may affect performance of the infiltration facility. Investigations shall be performed at the location of the proposed facility or as close as possible, but no more than 50 feet away. The number and type of subsurface investigations required are provided in Table 3.1 and Table 3.2. Seasonal timing, depth of subsurface investigations, vertical separation requirements, and investigation procedures are provided in *Appendix D*.

**Table 3.1. Minimum Investigation and Testing Requirements for Shallow Infiltration BMPs.**

| Impervious Area Infiltrated on the Site[a] | Step 3 | | Step 4 | | Step 6 | | | | |
|---|---|---|---|---|---|---|---|---|---|
| | Subsurface Investigation | | Infiltration Testing | | Groundwater Monitoring | | Characterization of Infiltration Receptor | Groundwater Mounding and Seepage Analysis | Acceptance Testing |
| | Minimum Number | Type | Minimum Number | Type | Minimum Number of Wells | Duration and Frequency | | | |
| < 2,000 ft$^2$ | 1 per facility AND at least 1 per 150 linear feet of a facility[c, d] | Simple subsurface investigation | 1 per facility AND 1 per 150 linear feet of a facility[c, d] | Simple Infiltration Test | 0 | NA | No | No | No |
| ≥ 2,000 to < 5,000 ft$^2$ | | Standard subsurface investigation | | Simple Infiltration Test or Small PIT; if ≥ 2,000 ft$^2$ of the site infiltration will occur within a single facility,[e, f] the Small PIT method is required | 0 | NA | No | No | No |
| ≥ 5,000 to < 10,000 ft$^2$ | | Comprehensive subsurface investigation | 1 per facility AND 1 per 150 linear feet of a facility[c, d] | Small PIT[f] | 1 | Monthly for at least 1 wet season; monthly for at least 1 year if within 200 feet of a designated receiving water[b] | | | Yes |
| ≥ 10,000 ft$^2$ to < 1 acre | | | | Small PIT[f] | 3 | Monthly for at least 1 year[b] | Yes, for infiltration basins | Yes[g] | Yes |
| ≥ 1 acre | | | | Small or Large PIT[f] | | | | | |

Note: Deviations from the minimum requirements in this table, when recommended and documented by the licensed professional, may be approved by the Director. If the licensed professional determines continuity of subsurface materials based on site investigations or if verification testing will be done during construction then fewer tests may be approved. Designer shall be prepared to make allowances to the design during construction if site conditions differ than assumed for the design or if the verification infiltration test during construction determines that the infiltration rate is lower than assumed for the design.

[a] Site is defined for SFR and Parcel projects as the project area; for Trail, Sidewalk or Roadway projects, it is defined by one intersection to the other and blocks may vary in length.

[b] If the project site is within 200 feet of tidal waters, groundwater data capturing low/high tide fluctuation for one calendar year shall be collected to determine if groundwater at the project is influenced by tidal fluctuations. Groundwater monitoring is not required if available groundwater elevation data within 50 feet of the proposed facility shows the highest measured groundwater level to be at least 10 feet below the bottom of the proposed infiltration facility.

[c] For bioretention or rain gardens, a facility refers to either a single cell, or a series of cells connected in series, with the overflows of upstream cells directed to downstream cells to provide additional flow control and/or treatment and conveyance.

[d] Preferably, the investigation is conducted at the location of the proposed infiltration facility, but it must be within 50 feet of the facility location.

[e] A single facility is defined as a facility that has at least a 10 foot separation distance from another infiltration facility, measured from the closest vertical extent of maximum ponding before overflow, or for bioretention and rain gardens, the maximum vertical extent of the top of the bioretention soil or compost amended soil.

[f] Investigation and infiltration testing must be conducted by a licensed professional or someone under the direct supervisions of the licensed professional.

[g] Groundwater mounding and seepage analysis is required where the depth to the seasonal high groundwater elevation or hydraulically-restrictive material is less than 15 feet below the bottom of the proposed infiltration facility.

**Table 3.2. Minimum Investigation and Testing Requirements for Deep Infiltration BMPs.**

| Impervious Area Infiltrated on the Site[a] | Step 3 | | Step 4 | | Step 6 | | | | |
|---|---|---|---|---|---|---|---|---|---|
| | Subsurface Investigations | | Infiltration Tests | | Groundwater Monitoring | | Characterization of Infiltration Receptor | Groundwater Mounding and Seepage Analysis | Acceptance Testing |
| | Minimum Number and Location | Type | Minimum Number and Location | Type | Minimum Number of Wells | Duration and Frequency | | | |
| < 10,000 ft$^2$ | One at every deep infiltration location | Deep infiltration subsurface investigation | One at every deep infiltration location | Deep Infiltration Test | 3 | Monthly for at least 1 wet season; monthly for at least 1 year if within 200 feet of a designated receiving water[b] | No | No | Yes |
| ≥ 10,000 ft$^2$ | | | | | | Monthly for at least 1 year[b] | Yes | Yes[c] | Yes |

Note: Deviations from the minimum requirements in this table, when recommended and documented by the licensed professional, may be approved by the Director. If the licensed professional determines continuity of subsurface materials based on site investigations or if verification testing will be done during construction then fewer tests may be approved. Designer shall be prepared to make allowances to the design during construction if site conditions differ than assumed for the design or if the verification infiltration test during construction determines that the infiltration rate is lower than assumed for the design.

[a] Site is defined for SFR and Parcel projects as the project area; for Trail, Sidewalk or Roadway projects, it is defined by one intersection to the other and blocks may vary in length.

[b] If the project site is within 200 feet of tidal waters, groundwater data capturing low/high tide fluctuation for one calendar year shall be collected to determine if groundwater at the project is influenced by tidal fluctuations. Groundwater monitoring is not required if available groundwater elevation data within 50 feet of the proposed facility shows the highest measured groundwater level to be at least 10 feet below the bottom of the proposed facility.

[c] Groundwater mounding and seepage analysis is required where the depth to the seasonal high groundwater elevation or hydraulically-restrictive material is less than 15 feet below the bottom of the proposed infiltration facility.

Vertical Separation Requirements

Vertical separation requirements shall be evaluated when performing a subsurface investigation. Infiltration BMPs require a minimum vertical separation from the lowest elevation of the facility to the underlying groundwater table or hydraulically-restrictive material. The vertical separation requirements depend upon the type of subsurface investigation required and the seasonal timing of the geotechnical exploration conducted to evaluate clearance and are always at least one foot less than the minimum investigation depths summarized in *Appendix D, Sections D-2.3* through *D-2.5.*

### Step 4: Conduct Infiltration Testing

This manual includes four methods of field infiltration testing to determine the measured infiltration rate:

- Simple Test (Small-scale infiltration test)
- Small Pilot Infiltration Test (PIT)
- Large PIT
- Deep infiltration test

The type of infiltration test required for a project is provided in Table 3.1 and Table 3.2 and varies by the impervious surface area routed to infiltration BMPs on a site. Infiltration testing procedures are provided in *Appendix D*. The small PIT, large PIT, and deep infiltration test reports shall be prepared by a licensed professional experienced in infiltration testing.

The minimum allowed infiltration rates are provided in Table 3.3.

**Table 3.3. Minimum Measured Infiltration Rates.**

| Infiltration BMP | Minimum Infiltration Rate for On-site List Approach, in/hr | Minimum Allowed Infiltration Rate for Meeting Flow Control, Water Quality Treatment and On-site Performance Standards, in/hr |
|---|---|---|
| Infiltration Trenches | 5 | 5 |
| Drywells | 5 | 5 |
| Infiltrating Bioretention without underdrain | 0.6 | 0.6 |
| Infiltrating Bioretention with underdrain | 0.3 | No minimum |
| Rain Gardens | 0.3 | Not applicable (only for On-site List Approach) |
| Permeable Pavement Facility | 0.3 | 0.3[b] |
| Permeable Pavement Surface | 0.3[a] | No minimum |
| Perforated Stub-out Connections | 0.3 | Not applicable (only for On-site List Approach) |
| Infiltration Basins | Not applicable | 0.6 |
| Infiltration Chambers | Not applicable | 0.6 |

[a] Infiltration testing not required, only necessary to prove infeasibility.

[b] No minimum infiltration rate if underdrain is installed.

**Step 5: Determine Design Infiltration Rate**

- The measured infiltration rate determined in the step above shall be reduced using correction factors to account for site variability and number of tests conducted, uncertainty of the test method, and potential for long-term clogging due to siltation and bio-buildup. The corrected infiltration rate is considered the long-term or design infiltration rate and is used for all BMP sizing calculations. Correction factors and methodology is provided in *Appendix D, Section D-4*.

**Step 6: Conduct Groundwater Monitoring, Receptor Characterization, Mounding and Seepage Analysis, and Acceptance Testing (as applicable)**

Groundwater Monitoring

Groundwater monitoring is required when runoff from more than 5,000 square feet of impervious surface area is infiltrated on the site (refer to Table 3.1). If the results of this groundwater monitoring indicate that adverse conditions could occur, as determined by a licensed professional, the infiltration facility shall not be built. Groundwater elevation data shall be used to evaluate the bottom of the facility against the vertical separation requirements in *Appendix D, Section D-2.2.4* to determine infiltration feasibility. Refer to *Appendix D, Section D-5*.

Characterization of the Infiltration Receptor

For projects proposing an infiltration basin or deep infiltration BMPs to infiltrate runoff from more than 10,000 square feet of impervious surface area, the infiltration receptor (unsaturated and saturated soil receiving the stormwater) shall be characterized (refer to Table 3.1 and *Appendix D*). If the results of this characterization indicate that adverse conditions could occur, as determined by a licensed professional, the infiltration facility shall not be built. Refer to *Appendix D, Section D-6*.

Groundwater Mounding and Seepage Analysis

A mounding analysis shall be required for projects that will be infiltrating 10,000 square feet or more of impervious surface area on the site and where the depth to the seasonal high groundwater elevation or hydraulically-restrictive material is less than 15 feet below the bottom of the proposed BMP. If the results of the mounding analysis indicate that adverse conditions could occur, as determined by a licensed professional, the infiltration facility shall not be built. Refer to *Appendix D, Section D-7*.

Acceptance Testing

Acceptance testing shall be performed for infiltration BMPs receiving runoff from greater than 5,000 square feet of impervious surface area. Acceptance testing may also be required for infiltration BMPs receiving runoff from a smaller contributing area. Refer to *Appendix D, Section D-8*.

**Step 7: Evaluate use of infiltration to meet minimum requirements**

- If infiltration is considered feasible, evaluate the feasibility of infiltration BMPs when selecting BMPs in *Section 3.3* (on-site stormwater management), *Section 3.4* (flow control), and *Section 3.5* (water quality treatment).

## 3.3. BMP Selection for On-site Stormwater Management

If the on-site stormwater management requirement is triggered, it can be met by using the On-Site List Approach or the On-site Performance Standard. The procedures for selecting BMPs under these options are provided below. Selection of BMPs shall build upon site assessment and planning information described in *Volume 1, Chapter 7.2* and *Volume 3, Sections 3.1 and 3.2*. Flow control and water quality treatment requirements may also apply (refer to *Sections 3.4 and 3.5*).

### *3.3.1. On-site List Approach*

If the on-site stormwater management requirement is triggered (per *Volume 1, Section 4.3.2)* and the On-site List Approach is selected as the method for compliance, follow the steps presented below to select the appropriate BMP(s) for a given project.

**Step 1: Determine if Dispersion and Infiltration are Feasible**

Refer to Section 3.1 and Section 3.2.

**Step 2: Calculate Areas by Surface Type**

For each project type, divide the project area into hard surface areas with distinct drainage pathways and conduct a BMP evaluation for each surface sub area.

**Step 3: Refer to Applicable On-site List(s)**

Identify the On-site List(s) in *Volume 1, Section 5.2* for the project type(s) that apply to the project. The On-site Lists provide On-site BMPs prioritized by category, with Category 1 comprising the first priority BMPs.

**Step 4: Evaluate BMPs by Category**

For each hard surface area type (i.e., roof or non-roof [ground-related surface]), evaluate the On-site BMP(s) as described in Steps 5 through 7 below. Evaluate the feasibility of all On-site BMPs in the first category before moving on to the next category. Note that the On-site List Approach assumes each hard surface area may be evaluated separately. Proposals to use BMPs in series (i.e., multiple bioretention cells) may require modeling using the On-site Performance Standard.

**Step 5: Evaluate Feasibility of Category 1 BMPs**

Determine feasibility of the BMP(s) in Category 1. The BMP is considered infeasible if one of the following applies:

- The BMP is considered infeasible per the "Infeasibility Criteria" provided for the BMP in *Appendix C*, which includes applicable Design Criteria and Site Considerations provided for the BMP in *Chapter 5*.
- Competing needs (e.g., historic preservation laws, health and safety standards) as provided in *SMC, Section 22.805.070* conflict with the BMP.

- The BMP size as detailed in the sizing for the On-site List Approach in *Chapter 5* cannot be met.
- Note: Some BMPs that are not sized can meet the requirements for a sub-area. Refer to *Credit for On-site List Approach* in *Chapter 5*.

**Step 6: Select Category 1 BMP(s)**

If any of the Category 1 BMPs are feasible for a surface (or surface "sub area"), then a Category 1 BMP shall be used to manage runoff for a given hard surface area (or surface sub area). Size the BMPs for the contributing area per the On-site List Approach sizing requirements in *Chapter 5.*

**Step 7: Document Infeasibility of Category 1 BMPs (if applicable)**

If all the Category 1 BMPs are deemed infeasible, infeasibility shall be documented. The applicant shall provide a completed On-site List Requirement Infeasibility Criteria Checklist (refer to the tables provided in *Appendix C*) or a narrative description and rationale with substantial evidence sufficient to explain and justify the applicant's conclusion that the On-site BMPs are infeasible.

If there are remaining unmanaged hard surfaces, proceed to Step 8. If all hard surfaces are managed, the BMP selection process for the On-site List Approach is complete.

**Step 8: Evaluate/Select Category 2 BMPs**

If there are remaining unmanaged hard surfaces, evaluate the On-site BMPs in Category 2 using the same approach described in Steps 5 through 7.

If all hard surfaces are managed, the BMP selection process for the On-site List Approach is complete.

**Step 9: Evaluate/Select Category 3 BMPs**

If there are remaining unmanaged hard surfaces, evaluate the On-site BMPs in Category 3 using the same approach described in Steps 5 through 7.

If all hard surfaces are managed, the BMP selection process for the on-site list approach is complete.

**Step 10: Evaluate/Select Category 4 BMPs (SFR and Parcel-based projects only)**

If there are remaining unmanaged hard surfaces, evaluate the On-site BMPs in Category 4 using the same approach described in Steps 5 through 7.

If all hard surfaces are managed, the BMP selection process for the On-site List Approach is complete.

### 3.3.2. On-site Performance Standard

If the on-site stormwater management requirement is triggered and the On-site Performance Standard is selected as the method for compliance, follow the steps presented below to select the appropriate BMP(s) for a given project.

**Step 1: Determine if Dispersion and Infiltration are Feasible**

Refer to Section 3.1 and Section 3.2.

**Step 2: Select BMP(s)**

Select a BMP, or multiple BMPs, to meet the On-Site Performance Standard. Refer to the *General Design Requirements* in *Chapter 4* for additional requirements that may affect the design and placement of BMPs on the site. Refer to *Chapter 5* of this volume for BMP applicability, site suitability, and design criteria.

**Step 3: Use Modeling Approach for BMP design**

The Modeling Approach for each BMP design shall be applied. Refer to *Section 4.1.3* and *Appendix F* for modeling requirements/guidelines.

## 3.4. BMP Selection for Flow Control

If the flow control minimum requirement is triggered, follow the steps presented below to select the appropriate flow control BMPs for a given project. All projects shall use On-site BMPs to the maximum extent feasible to meet Flow Control Minimum Requirements per SMC 22.805.080.B. In addition, On-site Stormwater Management and Water Quality Treatment Requirements may apply (refer to *Sections 3.3 and 3.5*).

**Step 1: Determine if Dispersion and Infiltration are Feasible**

Refer to Section 3.1 and Section 3.2.

**Step 2: Determine if Water Quality Treatment requirements also apply**

If the minimum requirements for water quality treatment also apply to a project, look for opportunities to use flow control BMPs that can also meet water quality treatment requirements (refer to *Chapter 2* and *Chapter 5* in this volume).

**Step 3: Select Flow Control BMP(s)**

Select a flow control BMP, or multiple BMPs (*refer to Chapter 2*). Refer to the *General Design Requirements* in *Chapter 4* for additional requirements that may affect the design and placement of BMPs on the site. Refer to *Chapter 5* of this volume for applicability, site suitability, and design criteria. Select flow control BMPs that best integrate with on-site stormwater management to the maximum extent feasible.

**Step 4: Use Pre-sized or Modeling Approach for BMP Design**

For projects with 10,000 square feet or more new and replaced hard surface area, use the Modeling Approach for BMP design (Step 4b). For sites with less than 10,000 square feet new and replaced hard surface area, either the Pre-Sized Approach or Modeling Approach for BMP design may be used (Steps 4a or 4b).

**Step 4a: Use Pre-sized Approach for BMP design**

Apply the Pre-sized Approach for BMP design (refer to *Section 0*). The designer may also choose to use the Modeling Approach (refer to Step 4b).

**Step 4b: Use Modeling Approach for BMP design**

Apply the Modeling Approach for BMP design. Refer to *Section 4.1.3* and *Appendix F* for modeling guidelines.

Table 3.4 summarizes flow control BMPs that can be used to meet Pre-developed Forested, Pre-developed Pasture, and/or Peak Control Standards. Refer to each BMP section in *Chapter 5* for more specific information on modeling to meet flow control standards.

**Table 3.4. Flow Control BMPs and Applicable Standards.**

| Flow Control BMP | Applicable Flow Control Standards | | | Section Reference |
|---|---|---|---|---|
| | Forested | Pasture | Peak | |
| Tree Planting and Retention | A | A | A | Section 5.2 |
| Full Dispersion | B | B | ✓ | Section 5.3.2 |
| Splashblock Downspout Dispersion | B | B | ✓ | Section 5.3.3 |
| Trench Downspout Dispersion | B | B | ✓ | Section 5.3.4 |
| Sheet Flow Dispersion | B | B | ✓ | Section 5.3.5 |
| Concentrated Flow Dispersion | B | B | ✓ | Section 5.3.6 |
| Infiltration Trenches | ✓ | ✓ | ✓ | Section 5.4.2 |
| Drywells | ✓ | ✓ | ✓ | Section 5.4.3 |
| Infiltrating Bioretention without underdrain | ✓ | ✓ | ✓ | Section 5.4.4 |
| Infiltrating Bioretention with underdrain | A | A | ✓ | Section 5.4.4 |
| Permeable Pavement Facilities | ✓ | ✓ | ✓ | Section 5.4.6 |
| Infiltration Basins | ✓ | ✓ | ✓ | Section 5.4.8 |
| Infiltration Chambers | ✓ | ✓ | ✓ | Section 5.4.9 |
| Rainwater Harvesting | ✓ | ✓ | ✓ | Section 5.5.1 |
| Vegetated Roof Systems | A | A | A | Section 5.6.1 |
| Permeable Pavement Surfaces | C | C | C | Section 5.6.2 |
| Detention Ponds | ✓ | ✓ | ✓ | Section 5.7.1 |
| Detention Pipes | D | D | D | Section 5.7.2 |
| Detention Vaults | D | D | D | Section 5.7.3 |
| Detention Cisterns | D | D | D | Section 5.7.4 |
| Non- infiltrating Bioretention | A | A | ✓ | Section 5.8.2 |
| Combined detention and wet pond | ✓ | ✓ | ✓ | Section 5.8.9 |
| Combined detention and wet vault | D | D | D | Section 5.8.9 |
| Combined detention and stormwater wetland | ✓ | ✓ | ✓ | Section 5.8.9 |

✓ – Standard achieved.

A – Standard may be partially achieved.

B – Standard may be partially or completely achieved depending upon underlying soil type.

C – Standard may be partially or completely achieved depending upon subgrade slope, infiltration rate of subgrade soil, and whether aggregate subbase is laid above or below surrounding grade.

D – Standard may be partially or completely achieved depending upon contributing area and minimum orifice size.

# 3.5. BMP Selection for Water Quality Treatment

If the Water Quality Treatment Minimum Requirement is triggered (refer to *Volume 1, Section 5.4.2*), this section describes the step-by-step process for selecting the type of treatment BMPs that apply to individual projects, as well as the physical site features that can impact water quality treatment BMP selection. All projects shall use On-site BMPs to the maximum extent feasible to meet Water Quality Treatment Minimum Requirements per SMC 22.805.090.B. Refer to *Section 3.5.2* for additional detail on BMP selection for the following water quality treatment performance goals – oil control, phosphorus, enhanced, and basic.

## *3.5.1. Selection Steps*

If one or more Water Quality Treatment Minimum Requirements are triggered, designers should follow the steps presented below and in Figure 3.2 to select the appropriate water quality treatment BMPs for a given project. In addition, On-site Stormwater Management and Flow Control Requirements may apply (refer to *Sections 3.3 and 3.4*).

**Step 1: Determine the Associated Pollutants of Concern**

- Determine the pollutants of concern and potential loads through an analysis of the proposed use(s) of the project site. Identify areas of the project site associated with the production of metals, organic compounds, and other toxic wastes that can be entrained in precipitation and runoff (through air pollution or deposition on the ground surface).
- Determine the potential for high sediment input. Particularly, sites with a large amount of fine-grained particles, such as silt and sand, can clog infiltration and filtration BMPs. Pretreatment may be required to remove total suspended solids (TSS) for infiltration and filtration BMPs (refer to *Section 4.4*). High TSS loads can also hinder the function of oil/water separators, especially coalescing plate (CP) separator systems, if sediment clogs the coalescing plates.
- Mean, or upper confidence limit, TSS loadings from Table 3.5 may be assumed when there is an absence of more site specific information.

**Table 3.5. Zoning categorization and TSS characteristics.**

| Zoning Categorization | Total Suspended Solids Concentration (mg/L)[a] | | |
|---|---|---|---|
| | LCL | UCL | Mean |
| • Parcels zoned as SFR or MFR<br>• Non-arterial streets adjacent to properties zoned as SFR or MFR | 44 | 93 | 69 |
| • Parcels zoned as neighborhood/commercial, downtown, major institutions, master planned community, or residential/commercial<br>• Arterial streets with adjacent property zoned as neighborhood/commercial, downtown, major institutions, master planned community, or residential/commercial | 58 | 106 | 82 |

**Table 3.5 (continued). Zoning categorization and TSS characteristics.**

| Zoning Categorization | Total Suspended Solids Concentration (mg/L)[a] | | |
|---|---|---|---|
| | LCL | UCL | Mean |
| • Parcels zoned as manufacturing/industrial<br>• Non-arterial or arterial streets with adjacent property zoned as manufacturing/industrial | 58 | 177 | 118 |

[a] Reference: SPU 2015.

LCL = lower confidence limit

UCL = upper confidence limit

SFR = Single Family Residential

MFR = Multi- Family Residential

### Step 2: Select an Oil Control BMP if Oil Control is Required

If oil control is required (refer to *Volume 1, Section 5.4.2.2*), select an Oil Control BMP using the list in Figure 3.2 and the information in *Section 3.5.2.1.* Refer to the *General Design Requirements* in *Chapter 4* for additional requirements that may affect the design and placement of BMPs on the site (e.g., bypass). Refer to *Section 5.8.9* of this volume for design information.

### Step 3: Select a Phosphorus Treatment BMP if Phosphorus Treatment is Required

At the time this manual was developed, there were no established phosphorus-specific treatment requirements for project-scale treatment BMPs in Seattle. However, if phosphorus treatment is required (refer to *Volume 1, Section 5.4.2.3*), select a Phosphorus Treatment BMP using the list in Figure 3.2 and the information in *Section 3.5.2.2* of this volume. If a project site is also subject to the enhanced treatment requirement, select a BMP or treatment train that is listed as providing both Enhanced Treatment and Phosphorus Treatment. Refer to the *General Design Requirements* in *Chapter 4* for additional requirements that may affect the design and placement of BMPs on the site (e.g., bypass). Refer to *Chapter 5* of this volume for BMP applicability, site considerations, and design criteria. Select water quality treatment BMPs that best integrate with the on-site stormwater management to the maximum extent feasible.

### Step 4: Select an Enhanced Treatment BMP if Enhanced Treatment is Required

If enhanced treatment is required (refer to *Volume 1, Section 5.4.2.4*), select an Enhanced Treatment BMP using the list in Figure 3.2 and the information in *Section 3.5.2.3* of this volume. Determine whether infiltration is feasible (refer to *Section 3.2*). If infiltration is feasible, select an infiltration BMP *(*refer to Figure 3.2*).* Determine whether presettling or pretreatment is required (refer to *Section 4.4*). Select water quality treatment BMPs that best integrate with the on-site stormwater management to the maximum extent feasible.

If a project site is also subject to the phosphorus treatment requirement, select a BMP or treatment train that is listed as providing both Enhanced Treatment and Phosphorus Treatment. Refer to the General Design Requirements in *Chapter 4* for additional

requirements that may affect the design and placement of BMPs on the site. Refer to *Chapter 5* of this volume for BMP applicability, site considerations, and design criteria.

**Step 5: Select a Basic Treatment BMP**

If the Water Quality Treatment Minimum Requirement is triggered (refer to *Volume 1, Chapters 2* and *5*) and the criteria for Phosphorus Treatment and Enhanced Treatment do not apply (refer to *Volume 1, Section 5.4.2.3* and *5.4.2.4)*, then only basic treatment is required. Determine whether infiltration is feasible (refer to *Section 3.2*). If infiltration is feasible, select an infiltration BMP *(*refer to Figure 3.2*).* Determine whether presettling or pretreatment is required (refer to *Section 4.4*). Select treatment BMPs that best integrate with the on-site stormwater management to the maximum extent feasible.

Select a Basic Treatment BMP using the list in Figure 3.2 and the information in *Section 3.3.2.4*. Refer to the General Design Requirements in *Chapter 4* for additional requirements that may affect the design and placement of BMPs on the site. Refer to *Chapter 5* of this volume for BMP applicability, site considerations, and design criteria.

**Step 6: Use Pre-sized or Modeling Sizing Approach for BMP Design**

For projects with 10,000 square feet or more new and replaced hard surface area, use the Modeling Approach for BMP design (Step 6b). For sites with less than 10,000 square feet new and replaced hard surface area, use either the Pre-sized Approach or Modeling Approach for BMP design (Steps 6a or 6b).

**Step 6a: Use Pre-sized Approach for BMP design**

Apply the Pre-sized Approach for BMP design (refer to *Section 0*). The designer may also choose to use the Modeling Approach (refer to Step 6b).

**Step 6b: Use Modeling Approach for BMP design**

Apply the Modeling Approach for BMP design. Refer to *Section 4.1.3* and *Appendix F* for modeling guidelines.

BMPs should be sized using either the water quality design storm volume or flow rate on an annual average basis. The performance goal applies on an average annual basis to the entire annual discharge volume (treated plus bypassed). The incremental portion of runoff in excess of the water quality design flow rate or volume can be routed around the BMP (offline treatment facilities), or can be passed through the BMP (on-line treatment BMPs) provided a net pollutant reduction is maintained (refer to *Section 4.2*). Other contributing areas shall bypass the facility, or the facility shall be sized to accommodate the additional contributing area. Where feasible, offline facilities are required to prevent resuspension and washout of accumulated phosphorus during large storm events.

Oil/water separators shall be located off-line and bypass the incremental portion of flows that exceed the off-line water quality design flow rate (refer to *Section 4.2.1*). If it is not possible to locate the separator off-line (e.g., roadway intersections), use the on-line water quality design flow rate (refer to *Section 4.2.1*).

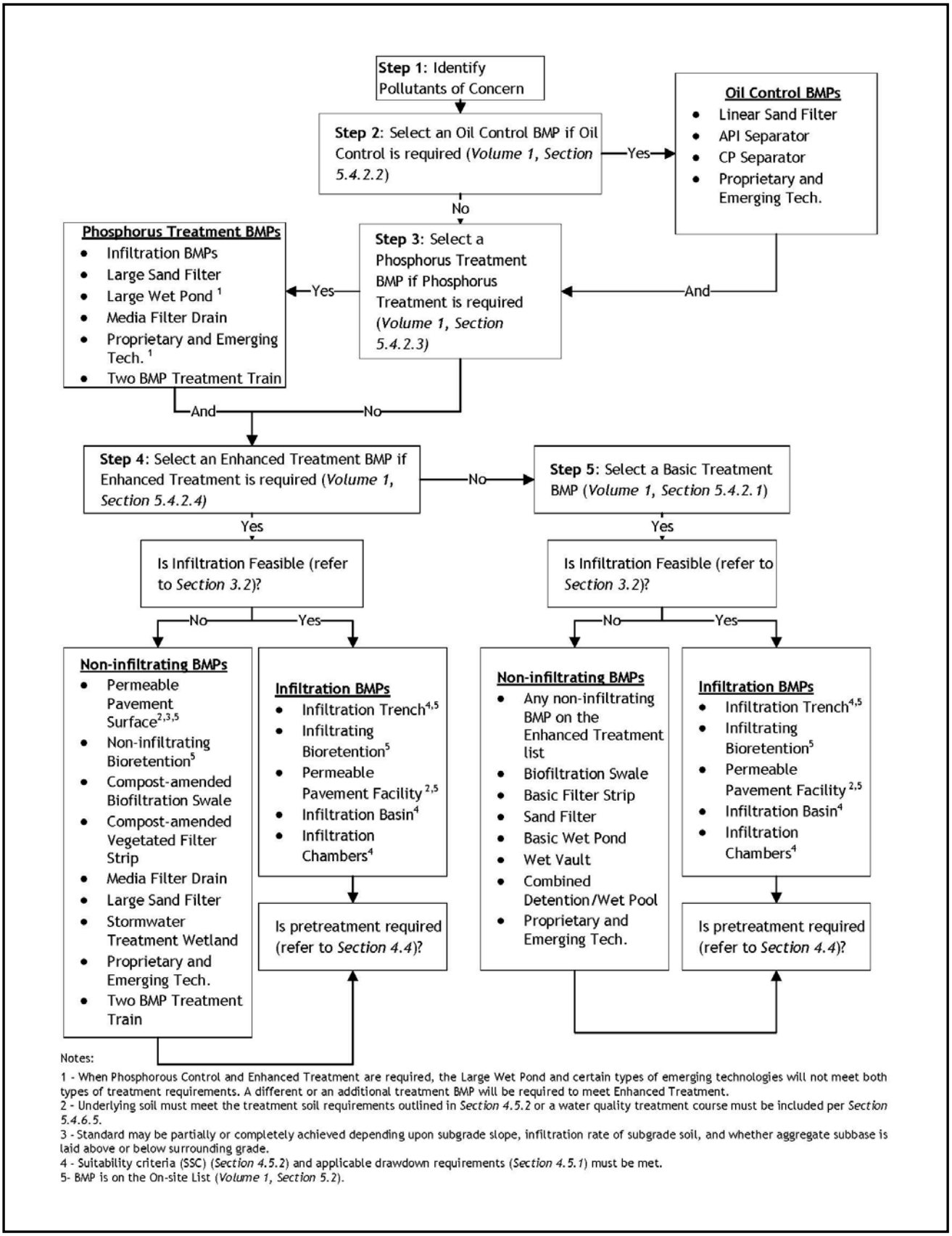


**Figure 3.2. Water Quality Treatment BMP Selection Flow Chart.**

Mass-based Sizing for Proprietary BMPs

The City requires proprietary technologies to be sized to account for solids loading targeting annual maintenance. To achieve this target, the City requirements adjustment of the water quality design flow rate based upon mass loading ratios. Refer to *Section 5.8.11.6* to determine how to size proprietary BMPs using the mass-based sizing approach. When *Section 5.8.11.6* does not provide sizing guidance for a BMP of interest, refer to Table 3.5 and provide documentation from the manufacturer that the annual maintenance target has been met.

## 3.5.2. Treatment Performance Goals and BMP Options

This section identifies choices that meet the treatment BMP categories referred to in *Section 3.5.1*. The treatment BMP categories in this section are discussed in the order of the decision process outlined in Figure 3.2 and include the following:

- Oil Control Treatment, Section 0
- Phosphorus Treatment, Section 3.5.2.2
- Enhanced Treatment, Section 3.5.2.3
- Basic Treatment, Section 3.5.2.4

### 3.5.2.1. Oil Control Treatment

Performance Goal: Oil Control Treatment BMPs are designed to achieve the following:

- No ongoing or recurring visible sheen
- A 24-hour average Total Petroleum Hydrocarbon (TPH) concentration no greater than 10 mg/l
- A maximum of 15 mg/l for a discrete sample (grab sample)

*Note*: For the analysis of most petroleum products, use the NWTPH-Dx method in Ecology Publication No. ECY 97-602, Analytical Methods for Petroleum Hydrocarbons. If the concentration of gasoline is of interest, use the NWTPH-Gx method to analyze grab samples.

BMP Options: Any one of the following options may be selected to satisfy the oil control requirement:

- Linear Sand Filter (refer to Section 5.8.5)
- API-Type Oil/Water Separator (refer to Section 5.8.9)
- Coalescing Plate Oil/Water Separator (refer to Section 5.8.9)
- Proprietary and Emerging Water Quality Treatment Technologies (refer to *Section 5.8.11*)

*Note*: The linear sand filter is also used for basic, enhanced, and phosphorus treatment. If used to satisfy one of those treatment requirements, do not use the same BMP to satisfy the

oil control requirement. This increase in maintenance is to prevent clogging of the filter by oil so that it will function for suspended solids, metals, and phosphorus removal as well.

#### 3.5.2.2. Phosphorus Treatment

Performance Goal: Phosphorus Treatment BMPs are designed to achieve 50 percent total phosphorus (TP) removal for a range of influent concentrations of 0.1 to 0.5 mg/l. In addition, the Phosphorus Treatment BMPs are designed to achieve Basic Treatment.

BMP Options: Any one of the following options may be selected to satisfy the Phosphorus Treatment requirement:

- Media Filter Drain – refer to *Section 5.8.4*
- Large Sand Filter – refer to Section 5.8.5
- Large Wet Pond – refer to Section 5.8.6
- Proprietary and Emerging Water Quality Treatment Technologies targeted for phosphorus removal – refer to *Section 5.8.11*
- Two-BMP Treatment Trains – refer to Table 3.6
- Infiltration Trench – refer to *Section 5.4.2*
- Infiltrating Bioretention – refer to *Section 5.4.4*
- Permeable Pavement Facility – refer to *Section 5.4.6*
- Infiltration Basin – refer to *Section 5.4.8*
- Infiltration Chamber – refer to *Section 5.4.9*

**Table 3.6. Treatment Trains for Phosphorus Treatment.**

| First BMP | Second BMP |
|---|---|
| Biofiltration Swale (*Section 5.8.3*) | Basic Sand Filter or Sand Filter Vault (*Section 5.8.5*) |
| Filter Strip (*Section 5.8.4*) | Linear Sand Filter (*Section 5.8.5*), no presettling needed |
| Linear Sand Filter (*Section 5.8.5*) | Filter Strip (*Section 5.8.4*) |
| Basic Wet Pond (*Section 5.8.6*) | Basic Sand Filter or Sand Filter Vault (*Section 5.8.5*) |
| Wet Vault (*Section 5.8.7*) | Basic Sand Filter or Sand Filter Vault (*Section 5.8.5*) |
| Stormwater Treatment Wetland (*Section 5.8.8*) | Basic Sand Filter or Sand Filter Vault (*Section 5.8.5*) |
| Basic Combined Detention and Wet Pool (*Section 5.8.9*) | Basic Sand Filter or Sand Filter Vault (*Section 5.8.5*) |

#### 3.5.2.3. Enhanced Treatment

Performance Goal: Enhanced Treatment BMPs without compost are designed to remove greater than 30 percent dissolved copper removal and greater than 60 percent dissolved zinc removal. The performance goal assumes that the Enhanced Treatment BMP is treating stormwater with dissolved copper typically ranging from 5 to 20 µg/l, and dissolved zinc ranging from 20 to 300 µg/l. In addition, the Enhanced Treatment BMPs are designed to achieve Basic Treatment.

BMP Options: Any one of the following options may be selected to satisfy the Enhanced Treatment requirement:

- *Infiltration Trench – refer to Section 5.4.2*
- Infiltrating Bioretention – refer to *Section 5.4.4*
- Permeable Pavement Facilities – refer to *Section 5.4.6*
- Infiltration Basin – refer to *Section 5.4.8*
- Infiltration Chamber – refer to *Section 5.4.9*
- Permeable Pavement Surfaces – refer to *Section 5.6.2*
- Non-infiltrating Bioretention – refer to *Section 5.8.2*
- Compost-amended Biofiltration Swale – refer to *Section 5.8.2*
- Compost-amended Vegetated Filter Strip (CAVFS) – refer to *Section 5.8.4*
- Media Filter Drain – refer to *Section 5.8.4*
- Large Sand Filter – refer to Section 5.8.5
- Stormwater Treatment Wetland – refer to Section 5.8.8
- Proprietary and Emerging Water Quality Treatment Technologies – refer to *Section 5.8.11*
- Two BMP Treatment Trains – refer to Table 3.7

**Table 3.7. Treatment Trains for Enhanced Treatment.**

| First BMP | Second BMP |
|---|---|
| Biofiltration Swale (*Section 5.8.3*) | Basic Sand Filter, Sand Filter Vault, or an approved Proprietary and Emerging Water Quality Treatment Technology[a] (*Section 5.8.5* or *Section 5.8.11*) |
| Filter Strip (*Section 5.8.4*) | Linear Sand Filter with no presettling cell needed (*Section 5.8.5*) |
| Linear Sand Filter (*Section 5.8.5*) | Filter Strip (*Section 5.8.4*) |
| Basic Wet Pond (*Section 5.8.6*) | Basic Sand Filter, Sand Filter Vault, or an approved Proprietary and Emerging Water Quality Treatment Technology[a] (*Section 5.8.5* or *Section 5.8.11*) |
| Wet Vault (*Section 5.8.7*) | Basic Sand Filter, Sand Filter Vault, or an approved Proprietary and Emerging Water Quality Treatment Technology[a] (*Section 5.8.5* or *Section 5.8.11*) |
| Basic Combined Detention/Wet Pool (*Section 5.8.9*) | Basic Sand Filter, Sand Filter Vault, or an approved Proprietary and Emerging Water Quality Treatment Technology[a] (*Section 5.8.5* or *Section 5.8.11*) |
| Basic Sand Filter or Sand Filter Vault with a presettling cell if the filter is not preceded by a detention BMP (*Section 5.8.5*) | An approved Proprietary and Emerging Water Quality Treatment Technology[a] (*Section 5.8.5* or *Section 5.8.11*) |

[a] The media shall be of a type approved for basic or enhanced treatment use by Ecology and accepted by the Director.

#### 3.5.2.4. Basic Treatment

Performance Goal: Basic Treatment BMPs are designed to achieve 80 percent removal of TSS for influent concentrations greater than 100 mg/l, but less than 200 mg/l. For influent concentrations greater than 200 mg/l, a higher treatment goal may be appropriate. For influent concentrations less than 100 mg/l, the BMPs are designed to achieve an effluent goal of 20 mg/l TSS.

BMP Options: Any one of the following options may be selected to satisfy the basic treatment requirement:

- Infiltration Trench – refer to *Section 5.4.2*
- Infiltrating Bioretention – refer to *Section 5.4.4*
- Permeable Pavement Facility – refer to *Section 5.4.6*
- Infiltration Basin – refer to *Section 5.4.8*
- Infiltration Chamber – refer to *Section 5.4.9*
- Permeable Pavement Surfaces – refer to *Section 5.6.2*
- Non-infiltrating Bioretention – refer to *Section 5.8.2*
- Biofiltration Swales – refer to *Section 5.8.3*
- Basic Filter Strip – refer to *Section 5.8.4*
- Compost-amended Vegetated Filter Strip (CAVFS) – refer to *Section 5.8.4*
- Media Filter Drain – refer to *Section 5.8.4*
- Sand Filters – refer to *Section 5.8.5*
- Basic Wet Pond – refer to *Section 5.8.6*
- Wet Vault – refer to *Section 5.8.7*
- Stormwater Treatment Wetland – refer to *Section 5.8.8*
- Combined Detention and Wet Pool – refer to *Section 5.8.9*
- Proprietary and Emerging Water Quality Treatment Technologies – refer to *Section 5.8.11*

# CHAPTER 4 – GENERAL DESIGN REQUIREMENTS

This chapter describes general design requirements for the following:

- Sizing approach
- Bypass
- Conveyance
- Pretreatment requirements
- Infiltration BMP requirements

## 4.1. Sizing Approach

This section describes the sizing approach for the following:

- **On-site List Approach**: to meet the On-site Stormwater Management requirement
- **Pre-sized Approach**: flow control credits, BMP sizing factors, and BMP sizing equations to meet flow control or water quality treatment performance standards
- **Modeling Approach**: continuous modeling approach to meet the On-Site Performance Standard, a specific flow control standard, or a water quality treatment requirement

The minimum requirements based on project type are provided in *Volume 1*, *Chapter 4*.

### *4.1.1. On-site List Approach*

Under the On-site List Approach, the On-site Stormwater Management Requirement may be met by selecting from a prioritized list of on-site BMPs as explained in *Section 3.3.1*. On-site List BMPs shall be sized as prescribed under the Sizing for On-site List Approach in each On-site BMP section in *Chapter 5*.

## 4.1.2. Pre-sized Approach

The Pre-sized Approach may be used to select and size to meet flow control and water quality treatment performance standards without performing continuous modeling when the following conditions have been met:

- The new and replaced hard surface area associated with a project does not exceed 10,000 square feet, and
- The project is subject to the Pre-developed Pasture Standard, the Peak Control Standard and/or Water Quality Treatment Standard (Basic, Oil, Phosphorus, and Enhanced Treatment)

### 4.1.2.1. Pre-sized Facilities

The BMPs included in the Pre-sized Approach include the following:

| BMP Category and Name | Type of Credit/Factor | Applicable Standards |
|---|---|---|
| **Tree Planting and Retention** | Flow Control Credit | Flow Control |
| **Dispersion BMPs** | | |
| Downspout Dispersion | Flow Control Credit | Flow Control |
| Sheet Flow Dispersion | Flow Control Credit | Flow Control |
| **Infiltration BMPs** | | |
| Infiltration Trenches | BMP Sizing Factor | Flow Control, Water Quality |
| Dry Wells | BMP Sizing Factor | Flow Control |
| Infiltrating Bioretention | BMP Sizing Factor | Flow Control, Water Quality |
| Permeable Pavement Facilities | BMP Sizing Factor | Flow Control, Water Quality |
| **Alternative Surface BMPs** | | |
| Vegetated Roof Systems | Flow Control Credit | Flow Control |
| Permeable Pavement Surfaces | Flow Control Credit | Flow Control |
| **Detention BMPs** | | |
| Detention Pipe | BMP Sizing Equation | Flow Control |
| Detention Vault | BMP Sizing Equation | Flow Control |
| Detention Cistern (aboveground) | BMP Sizing Equation | Flow Control |
| **Non-infiltrating BMPs** | | |
| Non-infiltrating Bioretention | BMP Sizing Factor | Flow Control, Water Quality |

Specific design requirements for the pre-sized BMPs (e.g., side slopes, freeboard, aggregate thickness, soil depth) are provided in the *BMP Credit* or *BMP Sizing* sections in *Chapter 5*.

### 4.1.2.2. Pre-sized Credits

The pre-sized BMPs are provided as either a flow control credit, BMP sizing factor, or BMP sizing equation. These are described below.

- **Flow Control Credits:** Flow control credits are awarded for BMPs that reduce hard surface areas. These credits can be applied to reduce the hard surface area requiring flow control. Note: This applies to flow control calculations only. If a site is also subject to water quality treatment requirements, calculations for water quality shall also be performed.

- **BMP Sizing Factors:** BMPs may be sized using the sizing factors provided in *Chapter 5*. The sizing factors can be used to calculate the BMP size as a function of the contributing area. These sizing factors were developed using a continuous runoff hydrologic model to achieve applicable flow control and water quality treatment standards. For BMPs with variable allowable depths, sizing factors are provided for at least two typical depths. Designers may linearly interpolate BMP size for intermediate design depths, but may not extrapolate.
- **BMP Sizing Equations:** Detention BMPs may be sized using the sizing equations provided in *Chapter 5*. Sizing equations were developed using a continuous runoff hydrologic model to achieve applicable flow control and water quality treatment standards.

For each BMP, flow control credits, sizing factors, or sizing equations were developed for typical design variations (e.g., ponding depths, aggregate thickness, slopes, etc.). To use these BMPs with a different design configuration or BMPs not listed above, the designer shall use the Modeling Approach (refer to *Section 4.1.3*).

When using the sizing factors or sizing equations for water quality treatment, stormwater flows from other areas (beyond the area for which the facility is sized) shall be bypassed around the facility, otherwise the Pre-sized Approach cannot be used.

When using the sizing factors or sizing equations for flow control, the maximum area that may be routed to a pre-sized BMP shall not exceed twice the area for which it is sized. No flow control credit is given for runoff from any area in excess of the area for which the facility was sized. If additional runoff is routed to a BMP, it shall be clearly noted on submitted plans and the overflow infrastructure requires engineering design for the full area (refer *Section 4.3.4*).

BMP sizing factors and equations were developed for Pre-developed Pasture and Peak Control Standards. If both standards apply to a project (such as a site in a non-listed creek basin with a capacity constrained drainage system), the larger BMP size or conservative flow control credit shall be used. A Pre-sized Approach was not developed for the Pre-developed Forested Standard because it is not triggered as often as the other flow control standards.

Generalized assumptions were used to design the pre-sized BMPs that may result in conservative sizing or may underestimate flow control or treatment credits for some sites. Refer to the *BMP Credit* or *BMP Sizing* sections each BMP section in *Chapter 5* for modeling assumptions used in the Pre-sized Approach. Designers have the option to use the pre-sized BMPs provided in this section, or to follow the Modeling Approach (refer to *Section 4.1.3*) and submit an alternative BMP size with supporting engineering calculations for review and consideration.

#### *4.1.2.3. Pre-sized Calculator*

An Excel-based Pre-sized Calculator is provided on the DPD website (www.seattle.gov/dpd/codesrules/codes/stormwater). This calculator automates sizing calculations (i.e., the flow control credits, BMP sizing factors and BMP sizing equations described above) and guides the applicant through the process of selecting BMPs. This calculator may be provided as part of a plan submittal to document compliance with flow control and/or water quality treatment standards.

## 4.1.3. Modeling Approach

Unless otherwise specified, all continuous modeling shall be performed using the City of Seattle Design Time Series consisting of a 158-year precipitation and evaporation time series that are representative of the climatic conditions in the City of Seattle. Continuous simulation methods and a list of approved continuous simulation models are provided in *Appendix F*.

### 4.1.3.1. On-site Performance Standard

As an alternative to the On-site List Approach (*Section 4.1.1*), the On-site Requirement can be met by demonstrating that the On-site Performance Standard (*Volume 1, Section 5.2)* is achieved. Under the Modeling Approach, BMPs are designed to achieve the On-site Performance Standard using a continuous rainfall-runoff model. Specific modeling requirements are presented in the *BMP Credit* or *BMP Sizing* section for each BMP in *Chapter 5*. For compliance with the On-site Performance Standard, it shall be demonstrated that the suite of BMPs used on the site results in the standard being met at the discharge point (also known as the point of discharge).

### 4.1.3.2. Flow Control

The Modeling Approach may be used for any project to design flow control BMPs, and is required for the following scenarios:

- Projects with new and replaced hard surface area equal to or exceeding 10,000 square feet that trigger a Flow Control Standard
- Projects with new and replaced hard surface area less than 10,000 square feet that are proposing to use different BMPs and/or assumptions that those used in the Pre-sized Approach

Under the Modeling Approach, flow control BMPs are designed to achieve flow control standards using a continuous rainfall-runoff model refer to (refer to *Volume 1*, *Section 5.2)*. Specific modeling requirements are presented in the *BMP Sizing* or *Flow Control Credit* section for each BMP in *Chapter 5*. As a rule of thumb, flow control standards can be achieved using a 0.5-inch diameter bottom orifice with a 3-foot live storage depth in the following scenarios:

- Pre-developed Forested Standard can be achieved when the contributing impervious area is greater than approximately TBD.
- Pre-developed Pasture Standard can be achieved when the contributing impervious area is greater than approximately TBD.
- Peak Control Standard can be achieved when the contributing impervious area is greater than approximately TBD.

When there is less contributing impervious area (as noted above), the following design/modeling approach is recommended:

- **Step 1**: Size the detention facility with 3 feet or less of head to meet the flow control standard with an optimized orifice size (orifice diameter may be lower than minimum allowed for construction).
- **Step 2**: Use the facility size (e.g., length and diameter) obtained in Step 1 and increase the orifice diameter to the minimum size (0.5 inches).

The BMPs used to meet the On-site List or the On-site Performance Standard may be included in the model and may contribute towards meeting the flow control standard(s), if applicable. When using the Modeling Approach, it shall be demonstrated that the suite of BMPs used on the site results in the standard(s) being met at the point of discharge.

#### *4.1.3.3. Water Quality Treatment*

The Modeling Approach may be used for any project to design water quality treatment BMPs, and is required for the following scenarios:

- Projects with new and replaced hard surface area equal to or exceeding 10,000 square feet that trigger Basic or Enhanced Treatment
- Projects that trigger Phosphorus or Oil Treatment
- Projects with new and replaced hard surface area less than 10,000 square feet that are proposing to use different BMPs and/or assumptions than those used in the Pre-sized Approach

Under the Modeling Approach, water quality treatment BMPs are designed to treat a specific water quality design storm volume or flow rate (refer to *Volume 1, Section 5.4.1* and *Appendix F)* using a continuous rainfall-runoff model. Specific modeling requirements are presented in the *BMP Sizing* section for each applicable BMP in *Chapter 5*. Some non-infiltrating BMPs (sand filters and oil/water separators) use a simplified sizing approach (refer to *Section 5.8.5 and 5.8.10*). The BMPs used to meet the On-site List or the On-site Performance Standard may be included in the model and may contribute towards meeting the Water Quality Treatment Standard, if applicable.

# 4.2. Bypass General Design Requirements

## 4.2.1. On-line vs. Offline Treatment BMPs

Treatment BMPs located upstream of a detention system can be designed as online or offline BMPs.

- On-line BMPs: Runoff flow rates in excess of the water quality design flow rate can be routed through the BMP provided a net pollutant reduction is maintained, and the applicable annual average performance goal is designed to be met and velocities are not high enough to resuspend sediments.
- Offline BMPs: For non-infiltrating BMPs not preceded by an equalization or storage basin, flows exceeding the water quality design flow rate may be bypassed around the treatment BMP. Where feasible, offline facilities are required to prevent resuspension and washout of accumulated phosphorus during large storm events (*Section 3.5*). However, during bypass events, the facility will continue to receive and treat the water quality design flow rate. Only the higher incremental portion of flow rates are bypassed around a treatment BMP. Design guidelines for flow splitters for use in offline BMPs are provided in *Appendix E*.
- Non-infiltrating BMPs preceded by an equalization or storage basin may identify a lower water quality design flow rate provided that at least 91 percent of the total runoff volume predicted by an approved continuous runoff model is treated to the applicable performance goals (e.g., 80 percent TSS removal at the water quality design flow rate and 80 percent TSS removal on an annual average basis).

## 4.2.2. Bypassing Flows Entering or Leaving a Site

The following three flow bypass-related scenarios require that additional considerations be taken into account when designing BMPs (refer to also *Appendix E* for design guidelines for flow splitters):

1. Flow currently enters the project site, but can be bypassed as part of the proposed project improvements.
2. Flow currently enters the project site, but cannot be bypassed as part of the proposed project improvements.
3. Flow that is within the project limits cannot feasibly be routed to the project BMP.

The requirements and guidelines applicable to each scenario are outlined below.

### 4.2.2.1. Scenario 1 – Managing Flows Entering a Site

Flows may bypass flow control and treatment BMPs if all of the following conditions are met:

- Natural drainage courses are maintained.
- Existing flows to wetlands are maintained (refer to *Volume 1, Section 5.3.1*).
- Peak flows are not increased by bypassing.
- The point of discharge does not adversely impact down gradient properties.

#### 4.2.2.2. Scenario 2 – Managing Flows Entering a Site

When flows cannot feasibly bypass proposed flow control BMPs, the flow control and water quality treatment BMPs shall be modeled and sized to handle the combined total flow (i.e., total volume, overflow design). However, the allowable discharge rates shall be determined by the minimum requirements applicable to runoff from the project site only.

When flows cannot feasibly bypass proposed treatment BMPs or meet the requirements listed in Scenario 1 above, the following applies:

- Flow control BMPs shall be sized for the combined total flow
- Treatment BMPs shall be sized for the combined total flow

#### 4.2.2.3. Scenario 3 – Uncontrolled Flows Leaving the Site

Runoff from a project that cannot feasibly be routed to the proposed flow control or treatment BMPs may be bypassed under one of the following conditions:

- When the proposed flow control and treatment BMPs are designed to manage uncontrolled flow and meet the applicable minimum requirements for the project
- When the bypass area is due to incidental grading to match surrounding roadways or properties, and is less than 1,000 square feet and will not create significant adverse impacts to down gradient properties

# 4.3. Conveyance General Design Requirements

## *4.3.1. Conveyance Design and Capacity Analysis*

For design or capacity analysis of the public drainage system, early consultation with Seattle Public Utilities is recommended. Client Assistance Memo (CAM) 1180 describes Design Guidelines for Public Storm Drain Facilities. Requirements and recommendations for Hydrologic Analysis and Design are in *Appendix F*.

## 4.3.2. Approved Point of Discharge

All projects must convey stormwater flow to an approved point of discharge and include overflows for all stormwater BMPs. The approved point of discharge must, at a minimum, maintain natural drainage patterns to the maximum extent feasible.

The approved point of discharge, in order of priority, includes:

- Surface waters
- Public storm drain pipes
- Ditch and culvert system
- Public combined sewer pipes
- Infiltration on the site

### 4.3.2.1. Requirements for Projects with No Offsite Point of Discharge

For projects with less than 5,000 square feet of new plus replaced hard surface where it has been determined by the Director that there is no offsite point of discharge for the project, the following minimum design criteria shall be met:

- Infiltration BMP (e.g., drywell) shall be designed by a licensed professional;
- Infiltration shall be feasible per *Section 3.2*, or as recommended in a stamped and signed report from a licensed professional;
- In addition to meeting other minimum requirements for the project, the infiltration BMP shall be designed to infiltrate the runoff volume from the area of development for the storm event with a 4 percent annual probability (25-year recurrence interval flow); and
- Infiltration BMPs shall be sized to not exceed 0.0001 cfs during the peak flow with a 4 percent annual probability (25-year recurrence flow).

One option for a small project overflow scenario consists of an infiltration BMP (i.e., infiltration trench or drywell) situated downstream of a bioretention cell or a permeable pavement facility sized to infiltrate storms up to the conveyance standard (25-year recurrence interval flow). Refer to *Appendix E, Section E.10* for sizing information.

### 4.3.3. Conveyance Systems to Point of Discharge

The types of conveyance systems to the approved point of discharge, in order of priority, includes:

- Direct pipe connections
- Ditch and culvert system
- Gutter or street flow line
- Surface dispersal

### 4.3.4. Overflow Requirements

Overflows are critical to minimize flooding and protect the downstream conveyance system, receiving water, and downstream properties. Overflow options include the following:

- Direct conveyance to an approved point of discharge (refer to *Section 4.3.2*) or a downstream BMP
- Through interflow to the surface
- To surface discharge
- Combination of these measures

Overflow conveyance options include the following:

- Piped
- Daylighted through a storage reservoir
- Distributed through a flow spreader (refer to *Appendix E*)
- Discharged through overtopping of the BMP

Plans shall indicate all flow paths. At a minimum, overflows shall be designed to convey peak flows with a 4 percent annual probability (25-year recurrence interval flows). Designers shall consider flooding and nuisance ponding risks associated with larger peak flows. During large storm events, capacity will be limited at the approved point of discharge and backwater calculations may be required.

For dispersion BMPs and for infiltration BMPs designed to fully infiltrate all flows for the 158-year simulation period, a constructed overflow is not required. Plans shall indicate surface flow paths in case of failure of the BMP.

## 4.4. Presettling and Pretreatment Requirements

Presettling should be evaluated for most BMPs to protect BMPs from excessive siltation and debris. Pretreatment is required for some water quality treatment BMPs. Refer to the individual BMP sections in *Chapter 5* for presettling and pretreatment requirements specific to those BMPs.

### *4.4.1. Description*

Presettling and pretreatment are essential to effective long-term facility performance.

1. **Presettling**: Presettling consists of structures or cells. Presettling structures are catch basins or vaults that are located upstream of a BMP and are intended to collect sediment that could otherwise clog or impair the function of the primary BMP. Other types of presettling facilities (i.e., presettling cells, presettling zones) specific to BMPs are described BMP Design Criteria in *Chapter 5*.
2. **Pretreatment**: Pretreatment consists of structures that are used to remove sediments, floating oils and floating debris (such as trash) upstream of a water quality treatment BMP to reduce clogging of the BMP.
   - Hydrodynamic separators: Flow-through structures with a settling or separation unit to remove sediments and particle-bound pollutants. The facility name refers to the application of the energy of flowing water to facilitate sediment separation and removal. Depending on the type of unit, particle settling may occur by means of swirl action or indirect filtration.
   - Floatables capture: Facilities designed to trap floating oils and debris before it enters a primary treatment BMP.

### *4.4.2. Performance Mechanisms*

Where the primary performance mechanism of a treatment BMP is biofiltration, infiltration, or settling; excessive sediment can reduce the effectiveness over time by reducing stormwater contact with vegetation or clogging sands and other filtration media.

1. **Presettling:** Protects facilities from excessive siltation and debris through settling to remove TSS prior to discharging to the primary BMP.
2. **Pretreatment:** Protects facilities from excessive siltation and debris through settling to remove TSS prior to discharging to the primary BMP and includes the following:
   - Hydrodynamic separators: Use the energy of flowing water to separate solids from stormwater.
   - Floatables capture: Facilities take advantage of the floating properties of certain pollutants, such as oils and trash, and capture them where they can be easily removed, sending the rest of the stormwater to a separate area for further treatment.

## 4.4.3. Applicability

### 4.4.3.1. Presettling and Pretreatment

General requirements for presettling and pretreatment are summarized in Table 4.1.

**Table 4.1. Presettling and Pretreatment Requirements.**

| BMP | Presettling Cell or Structure | Alternative Pretreatment | Reference |
|---|---|---|---|
| Infiltration trenches | S | Basic Treatment BMP or Proprietary and Emerging Water Quality Treatment Technologies[a] | *Section 5.4.2* |
| Drywells | A | Basic Treatment BMP or Proprietary and Emerging Water Quality Treatment Technologies[a] | *Section 5.4.3* |
| Infiltrating bioretention | S | Basic Treatment BMP or Emerging Technology[a] | *Section 5.4.4* |
| Rain gardens | N | Not applicable | *Section 5.4.5* |
| Permeable pavement facilities | S | Basic Treatment BMP or Proprietary and Emerging Water Quality Treatment Technologies[a] | *Section 5.4.6* |
| Perforated stub-out connections | S | Not applicable | *Section 5.4.7* |
| Infiltration basins | S | Basic Treatment BMP or Proprietary and Emerging Water Quality Treatment Technologies[a] | *Section 5.4.8* |
| Infiltration chambers | S | Basic Treatment BMP or Proprietary and Emerging Water Quality Treatment Technologies[a] | *Section 5.4.9* |
| Permeable pavement surfaces | N | Basic Treatment BMP or Proprietary and Emerging Water Quality Treatment Technologies[a] | *Section 5.6.2* |
| Non-infiltrating Bioretention | S | Basic Treatment BMP or Proprietary and Emerging Water Quality Treatment Technologies[a] | *Section 5.8.2* |
| Detention ponds | A | Basic Treatment BMP or Proprietary and Emerging Water Quality Treatment Technologies[a] | *Section 5.7.1* |
| Detention pipes | S | Not applicable | *Section 5.7.2* |
| Detention vaults | S | Not applicable | *Section 5.7.3* |
| Detention cisterns | N | Not applicable | *Section 5.7.4* |
| Basic biofiltration swale | S | Basic Treatment BMP or Proprietary and Emerging Water Quality Treatment Technologies[a] | *Section 5.8.3* |
| Wet biofiltration swale | S | Basic Treatment BMP or Proprietary and Emerging Water Quality Treatment Technologies[a] | *Section 5.8.3* |

**Table 4.1 (continued). Presettling and Pretreatment Requirements.**

| BMP | Presettling Cell or Structure | Alternative Pretreatment | Reference |
|---|---|---|---|
| Continuous inflow biofiltration swale | N | Not applicable | *Section 5.8.3* |
| Compost-amended biofiltration swale | S | Basic Treatment BMP or Proprietary and Emerging Water Quality Treatment Technologies[a] | *Section 5.8.3* |
| Basic sand filter basin | A | Treatment Train | *Section 5.8.5* |
| Large sand filter basin | A | Treatment Train | *Section 5.8.5* |
| Sand filter vaults | A | Treatment Train | *Section 5.8.5* |
| Linear sand filters | S | Treatment Train | *Section 5.8.5* |
| Basic wetpond | A | Treatment Train | *Section 5.8.6* |
| Large wetpond | A | Treatment Train | *Section 5.8.6* |
| Wet vaults | A | Treatment Train | *Section 5.8.7* |
| Stormwater treatment wetlands | A | Treatment Train | *Section 5.8.8* |
| Combined detention and wet pond | A | Treatment Train | *Section 5.8.9* |
| Combined detention and wet vault | A | Treatment Train | *Section 5.8.9* |
| Combined detention and stormwater wetland | A | Treatment Train | *Section 5.8.9* |
| American Petroleum Institute (API baffle type) oil/water separator | S | Basic Treatment BMP or Proprietary and Emerging Water Quality Treatment Technologies[a] | *Section 5.8.10* |
| Coalescing plate (CP) oil/water separator | S | Basic Treatment BMP or Proprietary and Emerging Water Quality Treatment Technologies[a] | *Section 5.8.10* |
| Proprietary and Emerging Water Quality Treatment Technology | S | Basic Treatment BMP or Proprietary and Emerging Water Quality Treatment Technologies[a] | *Section 5.8.11* |

S – Sometimes

A – Always

N – Not Required

[a] Refer to *Section 5.8.11* for more information on approved stormwater technologies and technologies currently under review for pretreatment.

Pretreatment should also be considered where the basic treatment BMP or the receiving water may be adversely affected by non-targeted pollutants (e.g., oil), or may by overwhelmed by a heavy load of targeted pollutants (e.g., suspended solids).

### *4.4.3.2. Pretreatment*

Specific pretreatment requirements for enhanced and phosphorus treatment are summarized in the following subsections.

## Enhanced Treatment

The following treatment trains can provide enhanced treatment:

- Infiltration BMP preceded by a presettling cell or Basic Treatment BMP:

  If infiltration is through soils meeting the minimum criteria for water quality treatment (refer to *Section 4.5.2*), a presettling cell or a basic treatment BMP can serve for pretreatment.

- Infiltration preceded by a Basic Treatment BMP

  If infiltration is through soils that do not meet the soil suitability criteria for water quality treatment (refer to *Section 4.5.2*), treatment shall be provided by a basic treatment BMP unless the soil and site fit the description in the next option below.

- Infiltration preceded by an Enhanced Treatment BMP

  If the soils do not meet the soil suitability criteria for water quality treatment (refer to *Section 4.5.2*) and the infiltration site is within 1/4 mile of a fresh water designated for aquatic life use or that has an existing aquatic life use, treatment shall be provided by another treatment BMP option.

- *Note*: Bioretention systems that are constructed using the soil mix specified in *Section 5.4.4.5* will qualify as Enhanced Treatment.

## Phosphorus Treatment

- The following treatment trains can provide phosphorus treatment:
- Infiltration BMP preceded by a presettling cell or Basic Treatment BMP:

  If infiltration is through soils that meet the soil suitability criteria for water quality treatment (refer to *Section 4.5.2*), a presettling cell or a basic treatment BMP can serve for pretreatment.

- Infiltration preceded by a Basic Treatment BMP:

  If infiltration is through soils that do not meet the soil suitability criteria for water quality treatment (refer to *Section 4.5.2*), treatment shall be provided by a basic treatment BMP unless the soil and site fit the description in the next option below.

- Infiltration preceded by a Phosphorus Treatment BMP:

  If the infiltration soils do not meet the soil suitability criteria for water quality treatment (refer to *Section 4.5.2*) and the infiltration site is within 1/4 mile of a nutrient-critical receiving water, or a tributary to that water, treatment shall be provided by another treatment BMP. At the time of publishing, the City has not have any designated nutrient-critical receiving waters. In the event that any City nutrient-critical receiving waters are designated, the City will publish a Directors' Rule.

### 4.4.4. Site Considerations

Refer to *Chapter 5* for specific presettling requirements for some BMPs. Additional site considerations may apply depending on site conditions and other factors.

1. Presettling:
   - For site considerations related to catch basins used as presettling structures, refer to City of Seattle Standard Plan No. 240, 241, or equivalent.
   - Refer to Site Considerations in Chapter 5 for more information on presettling site consideration requirements specific to BMPs.
2. Pretreatment:
   - Refer to manufacturer guidance for site considerations for hydrodynamic separators and floatables capture.

### 4.4.5. Design Criteria

Refer to *Chapter 5* for specific presettling requirements for some BMPs.

1. Presettling:
   - Inflows shall be routed through a catch basin or yard drain with downturned elbow (trap) upstream of the facility to capture sediment and reduce the potential for clogging.
   - Catch basins used for presettling shall be per City of Seattle Standard Plan No. 240, 241, or equivalent.
2. Pretreatment:
   - Refer to manufacturer guidance for design criteria for hydrodynamic separators and floatables capture.

### 4.4.6. Operations and Maintenance Requirements

Presettling and pretreatment facility operations and maintenance requirements are provided in *Appendix G* for Infiltration Facilities, Biofiltration Swales, Filter Strips, Wet Ponds, Stormwater Treatment Wetlands, Sand Filter Basins, and Sand Filter Vaults.

Refer to Ecology's website and the manufacturer for facility-specific maintenance requirements for hydrodynamic separators (www.ecy.wa.gov/programs/WQ/stormwater/newtech/technologies.html).

# 4.5. Infiltration BMPs

Infiltration BMPs have specific sizing guidelines and soil requirements that are summarized in the following subsections.

## *4.5.1. Infiltration BMP Sizing*

Sizing for selected infiltration BMPs are provided in the BMP Sizing sections of *Chapter 5*. Below are the general procedures for sizing an infiltration BMP to (A) infiltrate 100 percent of runoff; (B) meet the water quality treatment requirements, and (C) meet flow control standards. Infiltration BMPs shall be designed using an approved model.

- (A) For 100 percent infiltration (e.g., for project sites without a point of discharge):
  - Input dimensions of the infiltration BMP into an approved model
  - Input design infiltration rate (measured infiltration rate with correction factor applied)
  - Input a riser height and diameter to represent the BMP overflow conditions (any flow through the riser indicates that you have less than 100 percent infiltration and shall increase the infiltration BMP dimensions)
  - Run the model and review the model-reported percentage of runoff infiltrated. If less than 100 percent infiltrated, increase BMP dimensions until 100 percent infiltration is achieved. There is no need to check duration when infiltrating 100 percent of the full continuous record runoff file.
- (B) For 91 percent infiltration (water quality treatment requirement):
  - The procedure is the same as option A, except that the target is to infiltrate 91 percent of the influent runoff volume. In addition, to prevent the onset of anaerobic conditions, an infiltration BMP designed for water quality treatment purposes shall be designed to drain the water quality design treatment volume within 48 hours. The water quality design treatment volume is reported by the approved models.
  - The drawdown time can be calculated by using a horizontal projection of the infiltration basin mid-depth dimension and the estimated design infiltration rate. Refer to *Section 4.5.2* for soil requirements for water quality treatment.
- (C) To meet flow control standards with infiltration:
  - This design allows less than 100 percent infiltration as long as any BMP overflows meet the numerical peak and/or duration standards outlined in *Volume 1, Section 3.2*. Set up the model as explained for 100 percent infiltration (option A). Run the model and review the flow duration and flow frequency results to determine if the standard is achieved.

## *4.5.2. Soil Requirements for Water Quality Treatment*

The soil requirements for water quality treatment vary depending on the type of infiltration BMP. Many infiltration BMPs (e.g., infiltration basins, infiltration trenches, and permeable pavement facilities) rely on the properties of the underlying soils (i.e., existing underneath

the facility) to meet water quality treatment requirements. Bioretention systems utilize imported soils meeting specific criteria to meet water quality treatment requirements. The following sections summarize the applicable soil requirements for both categories of BMPs.

#### *4.5.2.1. Underlying Soil Requirements for Infiltration BMPs*

Infiltration basins, infiltration trenches, and permeable pavement facilities meet the requirements for basic, phosphorus, and enhanced treatment provided that the following soil suitability criteria are met:

- **Soil Suitability Criteria #1**: For infiltration BMPs used for treatment purposes, the measured (initial) soil infiltration rate shall be 9 inches/hour, or less. Design (long-term) infiltration rates up to 3.0 inches/hour can also be considered, if the infiltration receptor is not a sole-source aquifer as designated by EPA Region 10, and in the judgment of the experienced licensed professional, the treatment soil has characteristics comparable to those specified in Soil Suitability Criteria #2 to adequately control target pollutants.
- **Soil Suitability Criteria #2**: The underlying soil for a depth of at least 18 inches shall meet the following conditions:
  - Cation exchange capacity (CEC), as determined by U.S. EPA Method 9081, of the soil shall be greater than or equal to 5 milliequivalents per 100 grams of dry soil. Lower CEC content may be considered if it is based on a soil loading capacity determination for the target pollutants that is approved by the Director.
  - Organic content of the treatment soil (ASTM D 2974): Organic matter can increase the sorptive capacity of the soil for some pollutants. Soil organic content should be at least 1 percent; however, the licensed professional designing the facility should evaluate whether the organic matter content is sufficient for control of the target pollutant(s).
- **Soil Suitability Criteria #3**: Waste materials of any kind, including recycled materials, shall not be used as infiltration media.

#### *4.5.2.2. Imported Soil Requirements for Bioretention Systems*

Infiltrating bioretention facilities (*Section 5.4.4*) meet the requirements for basic and enhanced treatment, but are not subject to the same underlying soil infiltration treatment requirements for infiltration basins, infiltration trenches, and permeable pavement facilities (i.e., soil suitability criteria #1 through #3) because they use the City-specific standards for the imported bioretention soil mix. Soil requirements for bioretention facilities are provided in *Section 5.4.4.5*.

# CHAPTER 5 – BMP DESIGN

For each BMP in this chapter, detailed technical information is organized as follows:

- **Description**: provides a description of the BMP and each of the BMP configurations.
- **Performance Mechanisms**: defines how pollutants are removed (treatment mechanisms) and/or how stormwater discharge is managed (flow control mechanisms).
- **Applicability**: lists the BMP configurations that can be designed to meet the requirements for on-site stormwater management, flow control, water quality treatment (basic, enhanced, oil control, phosphorus), and/or conveyance.
- **Site Considerations**: identifies the limitations associated with siting each BMP. The application of a BMP may be constrained by factors such as approximate footprint, groundwater elevation, soil characteristics, and other site-specific conditions.
- **Design Criteria**: provides descriptions and specifications for BMP components and materials.
- **BMP Sizing**: presents sizing requirements and modeling procedures for each BMP. General modeling guidance is provided in *Appendix F*.
- **Minimum Construction Requirements**: describes critical considerations during construction of the BMP, such as erosion control, landscape stabilization, and timing of BMP installation.
- **Operations and Maintenance Requirements**: provides a reference to the operations and maintenance (O&M) requirements included in *Appendix G*.

# 5.1. Soil Amendment BMP

## 5.1.1. Description

Site soils shall meet minimum quality and depth requirement at project completion. Requirements may be achieved by either retaining and protecting undisturbed soil or restoring the soil (e.g., amending with compost) in disturbed areas. On slopes exceeding 33 percent, soil amendment is not required, but may be used if recommended by a licensed professional.

Additional guidance for this BMP can be found in Seattle Tip 531: Post Construction Soil Management and Building Soil: Guidelines and Resources for Implementing Soil Quality and Depth BMP T5.13 (Stenn et al. 2012), which is available at www.buildingsoil.org.

## 5.1.2. Performance Mechanisms

Naturally occurring (undisturbed) soil, soil organisms, and vegetation provide the following important stormwater management functions:

- Water infiltration
- Nutrient, sediment, and pollutant adsorption
- Sediment and pollutant biofiltration
- Water interflow storage and transmission
- Pollutant decomposition

These functions are largely lost when development strips away underlying soil and vegetation and replaces it with minimal soil and sod. Soil amendment helps to regain greater stormwater functions in the post development landscape, provide increased treatment of pollutants and sediments that result from development and habitation, and minimize the need for some landscaping chemicals; thus, reducing pollution through prevention.

## 5.1.3. Applicability

All areas subject to clearing, grading, or compaction (including construction laydown areas)that have not been covered by impervious surface, incorporated into a drainage facility, or engineered as structural fill or slope shall, at project completion, meet the soil amendment BMP requirements. Only the areas of the sites where existing vegetation and/or soil are disturbed or compacted are required to be restored.

Soil amendment can also be used to help achieve on-site stormwater management and flow control standards when integrated into a dispersion BMP (refer to *Section 5.3*).

## 5.1.4. Site Considerations

At project completion, meet soil amendment requirements for all areas subject to clearing, grading, or compaction that have not been covered by a hard surface, incorporated into a drainage facility, or engineered as structural fill or slope. Only the areas where existing vegetation and/or soil are disturbed or compacted are required to be restored.

## 5.1.5. Design Criteria

This section describes the implementation options and design requirements for the soil amendment BMP. Typical cross-sections of compost-amended soil in planting bed and turf applications are shown in Figure 5.1. Design criteria are provided in this section for the following elements:

- Implementation options
- Soil retention
- Soil quality
- Soil Management Plan

### 5.1.5.1. Implementation Options

The soil quality design requirements can be met by using one of the four options listed below:

1. Retain and Protect Undisturbed Soil:
    - Leave undisturbed vegetation and soil, and protect from compaction by fencing and keeping materials storage and equipment off these areas during construction.
    - For all areas where soil or vegetation are disturbed, use option 2, 3, or 4.
2. Amend Soil:
    - Amend existing site topsoil or subsoil either at default “pre-approved” rates, or at custom calculated rates to meet the soil quality guidelines based on engineering tests of the soil and amendment. The default pre-approved rates are:
        - In planting beds: place 3 inches of compost and till in to an 8 inch depth.
        - In turf areas: place 1.75 inches of compost and till in to an 8 inch depth.
        - Scarify (loosen) subsoil 4 inches below amended layer to produce a 12-inch depth of un-compacted soil.
        - After planting: apply 2 to 4 inches of arborist wood chip or compost mulch to planting beds. Coarse bark mulch may be used but has lower benefits to plants and soil. Do not use fine bark because it can seal the soil surface.

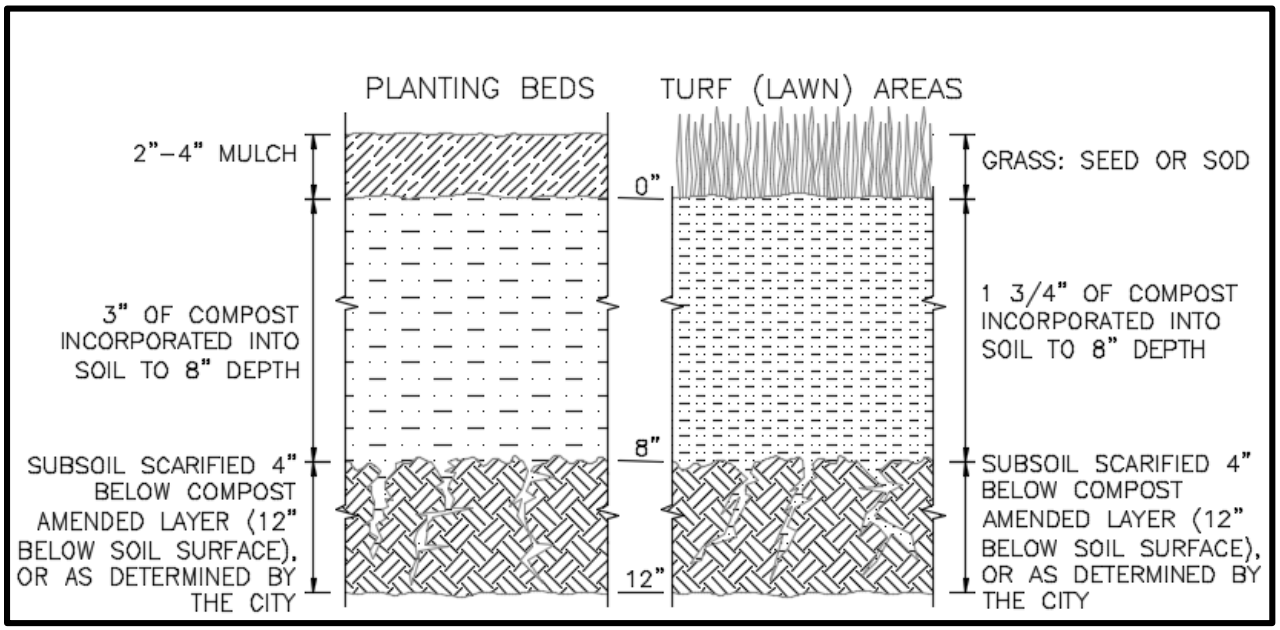


**Figure 5.1. Cross-section of Soil Amendment.**

1. Stockpile Soil:
   - Stockpile existing topsoil during grading and replace it prior to planting. Amend stockpiled topsoil if needed to meet the organic matter or depth requirements either at the default "pre-approved" rate or at a custom calculated rate (refer to the Building Soil manual [Stenn et al. 2012] or website (www.buildingsoil.org), for custom calculation method). Scarify subsoil and mulch planting beds, as described in option (2) above.
2. Import Soil:
   - Import topsoil mix of sufficient organic content and depth to meet the requirements. Imported soils should not contain excessive clay or silt fines (more than 5 percent passing the No. 200 sieve) because that could restrict stormwater infiltration. The default pre-approved rates for imported topsoils are:
     - For planting beds: use a mix by volume of 35 percent compost with 65 percent mineral soil to achieve the requirement of a minimum 8 percent (target 10 percent) organic matter by loss-on-ignition test.
     - For turf areas: use a mix by volume of 20 percent compost with 80 percent mineral soil to achieve the requirement of a minimum 4 percent (target 5 percent) organic matter by loss-on-ignition test.
     - Scarify subsoil and mulch planting beds, as described in option (2) above.

Note: more than one method may be used on different portions of the same site.

### *5.1.5.2. Soil Retention*

Retain the duff layer and native topsoil in an undisturbed state to the maximum extent feasible, and protect from compaction (SMC, Section 22.805.020.D.2). In any areas requiring grading, remove and stockpile the duff layer and topsoil on site in a designated, controlled

area, which is not adjacent to public resources and critical areas. Reapply to other portions of the site where feasible.

### 5.1.5.3. Soil Quality

Soil organic matter is often missing from disturbed soils. Replenish organic matter by amending with compost. Standardized "pre-approved" soil amendment rates have been established for planting beds and turf areas. Alternatively, custom amendment rates may be calculated. Both options are described in further detail in the subsequent section.

All areas subject to clearing and grading that have not been covered by hard surface, incorporated into a drainage facility, or engineered as structural fill or slope must, at project completion, demonstrate the following:

- A topsoil layer meeting these requirements:
  - An organic matter content, as measured by the loss-on-ignition test, of a minimum 8 percent (target 10 percent) dry weight in planting beds, or a minimum 4 percent (target 5 percent) organic matter content in turf areas. Acceptable test methods for determining loss-on-ignition soil organic matter include the most current version of ASTM D2974 (Test Methods for Moisture, Ash, and Organic Matter of Peat and Other Organic Soils) and TMECC 05.07A (Loss-On-Ignition Organic Matter Method).
  - A pH from 6.0 to 8.0 or matching the pH of the original undisturbed soil.
  - A minimum depth of 8 inches.
  - These requirements may be met with the City of Seattle Standard Specifications: 9-14.1(1) Topsoil Type A – Imported; 9-14.1(2) Reused Amended Site Soil; 9-14.1(4) Planting Soil; or 9-14.1(5) General Turf Area Soil.
- Root zones where tree roots limit the depth of incorporation of amendments are exempted from this requirement. Fence and protect these root zones from stripping of soil, grading, or compaction to the maximum extent practical.
- Scarify subsoils below the topsoil layer at least 4 inches for a finished minimum depth of 12 inches of uncompacted soil. Incorporate some of the upper material to avoid stratified layers, where feasible.
- After planting: mulch planting beds with 2 to 4 inches of organic material such as arborist wood chips, bark, shredded leaves, compost, etc.
- Use compost and other materials that meet the following organic content requirements:
  - The organic content for "pre-approved" amendment rates can only be met using compost that meets the definition of "composted materials" in WAC 173-350 Section 220. Compost meeting the City of Seattle Standard Specification 9.14.4(8) Compost is recommended but not required. The compost shall have an organic matter content of 40 percent to 65 percent, and a carbon to nitrogen ratio below 25:1. As an exception, the carbon to nitrogen ratio may be as high as 35:1 for plantings composed entirely of plants native to the Puget Sound Lowlands region.

- Calculated amendment rates may be met through use of composted materials as defined above, or other organic materials amended to meet the carbon to nitrogen ratio requirements, and meeting the contaminant standards compost specified in WAC 173-350 Section 220. Refer to the *Building Soil* manual (Stenn et al. 2012) or website (www.buildingsoil.org) for the method of calculating custom amendment rates.

Ensure that the resulting soil is conducive to the type of vegetation to be established.

#### 5.1.5.4. Soil Management Plan

A Soil Management Plan is required and shall include the following:

- A site map showing areas to be fenced and left undisturbed during construction, and areas that will be amended at the turf or planting bed rates
- Calculations of the amounts of compost, compost amended topsoil, and mulch to be used on the site

The City has incorporated the soil management plan into the required *Construction Stormwater Control Plan and Post Construction Soil Management Plan*, which is available at the DPD website (www.seattle.gov/dpd/codesrules/codes/stormwater).

### 5.1.6. BMP Sizing

When the soil amendment BMP is applied as part of a dispersion BMP design, the On-Site List Requirement is met for the hard surface area that is dispersed. On-site stormwater management and flow control standards can also be met or partially met as described under the following sections:

- Full Dispersion (*Section 5.3.2*)
- Splashblock Downspout Dispersion (*Section 5.3.3*)
- Trench Downspout Dispersion (*Section 5.3.4*)
- Sheet Flow Dispersion (*Section 5.3.5*)
- Concentrated Dispersion (*Section 5.3.6*)

Lawn and landscaped areas that meet the soil amendment BMP requirements will generate less runoff and may be modeled as pasture rather than lawn surface over the underlying soil (till or outwash).

### 5.1.7. Minimum Construction Requirements

Minimum construction requirements for disturbed areas include the following:

- Incorporate soil to meet Soil Amendment BMP requirements toward the end of construction, and once established, protect from compaction and erosion.
- Plant soil with appropriate vegetation and mulch planting beds.

Additional information is provided in the *Building Soil* manual (Stenn et al. 2012).

### 5.1.8. Operations and Maintenance Requirements

The most important maintenance issue is to replenish the soil organic matter by leaving leaf litter and grass clippings on-site (or by adding compost and mulch regularly). This BMP is designed to reduce the need for irrigation, fertilizers, herbicides, and pesticides.

# 5.2. Tree Planting and Retention

## 5.2.1. Description

New trees can be planted and/or existing trees can be protected and retained on a project site to achieve on-site stormwater management and/or flow control credits.

## 5.2.2. Performance Mechanisms

Trees provide flow control via interception, transpiration, and increased infiltration. Additional environmental benefits include improved air quality, carbon sequestration, reduced heat island effect, pollutant removal, and habitat.

## 5.2.3. Applicability

Retained and newly planted trees receive credits toward meeting on-site stormwater management and flow control requirements. The degree of flow control that can be provided depends on the tree type (i.e., evergreen or deciduous), canopy area, and whether or not the tree canopy overhangs hard surfaces. This BMP can be applied to meet or partially meet the requirements listed below.

| | On-site | | Flow Control | | | Water Quality | | | | |
|---|---|---|---|---|---|---|---|---|---|---|
| **BMP** | **List** | **Standard** | **Forest** | **Pasture** | **Peak** | **Basic** | **Enhanced** | **Oil Control** | **Phosphorus** | **Conveyance** |
| Tree Planting and Retention | ✓ | ✓[a] | ✓[a] | ✓[a] | ✓[a] | | | | | |

[a] Standard may be partially achieved.

## 5.2.4. Site Considerations

Trees are a landscape amenity with flow control benefits that can be planted or retained in most settings. On-site stormwater management and/or flow control credit is given for retaining or planting trees within 20 feet of ground level hard surfaces such as driveways, patios, and parking lots. Refer to *Appendix C* for additional infeasibility criteria for the On-site List Approach.

Retained or newly planted trees may also count toward Green Factor, landscaping, and/or tree protection requirements.

Site considerations specific to retained and newly planted trees are provided below.

### 5.2.4.1. Retained Trees

Setbacks of proposed infrastructure from existing trees are critical considerations. Tree protection requirements limit grading and other disturbances in proximity to the tree (refer

to SMC Chapter 25.11, City of Seattle Standard Specification 1-07.16(2), 8-01.3(2)A and City of Seattle Standard Plans No. 132 and 133).

#### *5.2.4.2. Newly Planted Trees*

Mature tree height, size, and rooting depth shall be considered to ensure that the tree location is appropriate given adjacent and above- and below-ground infrastructure. Although setbacks will vary by species, some general recommendations are presented below.

- Minimum 5 foot setback from structures
- Minimum 5 foot setback from underground utility lines
- Minimum 2 foot setback from edge of any paved surface

### *5.2.5. Design Criteria*

This section provides the design requirements for retained trees and newly planted trees.

#### *5.2.5.1. Retained Trees*

To achieve on-site stormwater management and/or flow control credits by retaining trees on a project site, the requirements described below must be met. Design criteria are provided in this section for the following elements:

- Tree species and condition
- Tree size
- Tree canopy area (based on dripline delineation)
- Tree location (with setbacks from ground level hard surfaces and underground utilities)

##### Tree Condition and Compatibility with Construction

Clearly show existing tree species and tree locations on submittal drawings. Trees shall be viable for long-term retention (i.e., in good health and compatible with proposed construction).

##### Tree Size

To receive on-site stormwater management and and/or flow control credit, retained trees shall have a minimum 4 inch diameter at breast height (DBH). DBH is defined as the outside bark diameter at 4.5 feet above the ground on the uphill side of a tree. For existing trees smaller than this, the newly planted tree credit may be applied if the requirements presented in *Section 5.2.5.2 Newly Planted Trees* are met.

##### Tree Canopy Area

The canopy area of the retained tree is measured as the area within the tree drip line. A drip line is the line encircling the base of a tree, which is delineated by a vertical line extending

from the outer limit of a tree's branch tips down to the ground (refer to City of Seattle Standard Plan 133). If trees are clustered, overlapping canopies are not double counted.

### Tree Location

The credit for retained trees depends upon proximity to ground level hard surfaces. To receive credit, the existing tree shall be located on the development site and within 20 feet of new or replaced ground level hard surfaces (e.g., driveway, patio, parking lot). For single family residential projects only, credit is also given for trees that are 20 feet or less from existing ground level hard surfaces in the right-of-way (e.g., sidewalk). Distance from the edge of hard surfaces is measured from the tree trunk center at ground level. Refer *Section 5.2.4.1* for other setbacks applicable to retained trees.

The City may require an arborist report if a hard surface is proposed within the critical root zone of the existing tree. The critical root zone is defined as the line encircling the base of the tree within half the diameter of the dripline (refer to City of Seattle Standard Plan 133). If the arborist report concludes that the hard surface should not be placed within 20 feet of the tree trunk center, but canopy overlap with hard surface is still anticipated given a longer setback, credit may be approved.

Retained trees planted in planter boxes are eligible for credit if the planters provide a minimum soil depth of 30 inches and meet the minimum soil volume standards presented in Table 5.1.

**Table 5.1. Minimum Soil Volume for Trees in Planters.**

| Tree Size Category[a] | Planting Area Soil Volume[b] | Planting Surface Area[c] | Example Dimensions[c] |
|---|---|---|---|
| Small trees | Small trees not eligible for credit | | |
| Small/Medium Trees | 225 cubic feet | 90 square feet | 5 feet x 18 feet |
| Medium/Large Trees | 375 cubic feet | 150 square feet | 6 feet x 25 feet |
| Large Trees | 525 cubic feet | 210 square feet | 7 feet x 30 feet |

[a] Tree size categories from the City of Seattle Master Tree List.

[b] Note that these are minimum soil volume requirements. Trees will be healthier, bigger and longer-lived if greater soil volume is provided.

[c] Surface area and example dimensions assume a 30 inch soil depth. Smaller surface areas can achieve the same volume if a deeper soil profile is provided, or if adjacent paved surfaces are installed over structural soil or similar technologies.

## *5.2.5.2. Newly Planted Trees*

To achieve on-site stormwater management and/or flow control credits by planting trees on a project site, the requirements described below must be met. Design criteria are provided in this section for the following elements:

- Tree species
- Tree size
- Tree location (with setbacks from ground level hard surfaces structures and belowground utilities)

- Plant material and planting specifications
- Irrigation

### Tree Species

Approved tree species are listed in the City of Seattle Master Tree List (Approved Tree List) available via link from the DPD website (www.seattle.gov/dpd/codesrules/codes/stormwater). Trees in the small category are not eligible for credit. Tree species not included on the City of Seattle Master Tree List may be given credit with prior approval by the Director.

### Tree Size

To receive on-site stormwater management and and/or flow control credit, new deciduous trees shall be at least 1.5 inches in diameter measured 6 inches above the ground. New evergreen trees shall be at least 4 feet tall.

### Tree Location

Site trees according to sun, soil, and moisture requirements. Select planting locations to ensure that sight distances and appropriate setbacks are maintained given mature height, size, and rooting depths.

Trees used to receive the newly planted tree credit shall meet the tree location requirements listed in *Section 5.2.5.1, Retained Trees*. Refer *Section 5.2.4.2* for other setbacks applicable to new trees.

To help ensure tree survival and canopy coverage, the minimum tree spacing for newly planted trees shall accommodate mature tree spread (refer to City of Seattle Master Tree List). On-site stormwater management and/or flow control credit will not be given for new trees with on-center spacing less than 10 feet.

New trees planted in planter boxes are eligible for credit if the planters provide a minimum soil depth of 30 inches and meet the minimum soil volume standards presented in Table 5.1.

### Plant Material and Planting Specifications

Recommended guidelines for planting materials and methods are provided in City of Seattle Standard Specifications 8-02 and 9-14, and Standard Plans No. 100a, 100b, and 101.

## *5.2.6. BMP Credits*

### *5.2.6.1. Credit for On-site List Approach*

Hard surface areas managed by newly planted trees meet the On-site List Requirement (refer to *Section 3.3.1*). Retained trees meeting the requirements presented in this section may be used in lieu of newly planted trees to meet the on-site list requirement.

#### 5.2.6.2. Pre-Sized Approach for Flow Control

The Pre-sized Approach may be used for projects with new and replaced hard surface areas up to 10,000 square feet. Flow control credits for retained and newly planted trees are provided in Tables 5.2 and 5.3. These credits can be applied to reduce the hard surface area requiring flow control.

**Table 5.2. Flow Control Credits for Retained Trees.**

| Tree Type | Credit |
|---|---|
| Evergreen | 20% of canopy area (minimum of 100 square feet/tree) |
| Deciduous | 10% of canopy area (minimum of 50 square feet/tree) |

Hard Surface Area Managed = Σ Canopy Area x Credit (%)/100.

**Table 5.3. Flow Control Credits for Newly Planted Trees.**

| Tree Type | Credit |
|---|---|
| Evergreen | 50 square feet/tree |
| Deciduous | 20 square feet/tree |

Hard Surface Area Managed = Σ Number of Trees x Credit (square feet/tree).

To use these credits, the requirements outlined in *Section 5.2.5 Design Criteria* must be met. The total tree credit for retained and newly planted trees shall not exceed 25 percent of the new plus replaced hard surface requiring mitigation. Tree credits are not applicable to trees located in native vegetation areas used for flow dispersion or other flow control or on-site stormwater management credit.

#### 5.2.6.3. Modeling Approach for On-site Performance Standard and Flow Control

When using the Modeling Approach to meet the On-Site Performance Standard or flow control standards, the credits for retained and newly planted trees (Tables 5.2 and 5.3) can be applied as explained for the *Pre-sized Approach for Flow Control*. The hard surface areas credited by the retained and newly planted trees need not be entered into the continuous hydrologic model when sizing other on-site stormwater management or flow control BMPs.

### 5.2.7. Minimum Construction Requirements

Fence and protect the existing tree roots, trunk, and canopy during construction activities per SMC Tree Protection Chapter 25.11, City of Seattle Standard Specification 1-07.16(2), 8-01.3(2)A, and City of Seattle Standard Plans No. 132 and 133.

Planting methods for new trees are provided in *Section 5.2.5.2 Newly Planted Trees* section.

### 5.2.8. Operations and Maintenance Requirements

The following O&M requirements apply to retained trees:

- Retain, maintain, and protect trees on the site for the life of the development or until any approved redevelopment occurs.

- Prune, when necessary for compatibility with other infrastructure and/or to preserve the health and longevity of trees. Meet industry standards for pruning (ANSI A300 standards).

The following O&M requirements apply to newly planted trees:

- Provide supplemental irrigation during the first three growing seasons after planting to help ensure tree survival.

Additional O&M requirements for dead or declining trees are provided in *Appendix G* (*BMP No. 26*).

# 5.3. Dispersion BMPs

Dispersion BMPs disperse runoff over vegetated pervious areas to provide flow control. The dispersion BMPs in this section include:

- Full dispersion
- Splashblock downspout dispersion
- Trench downspout dispersion
- Sheet flow dispersion
- Concentrated flow dispersion

Key design requirements that are common to all dispersion BMPs are provided in *Section 5.3.1*. Guidance and requirements that are specific to the different types of dispersion are provided in the subsequent sections.

## *5.3.1. Design Requirements for Dispersion BMPs*

### *5.3.1.1. General Site Considerations*

The following are key considerations in determining the feasibility of dispersion BMPs for a particular site:

- *Dispersion flowpath area:* Dispersion BMPs generally require large areas of vegetated ground cover to meet flowpath requirements and are not feasible in most urban settings.
- *Erosion or flooding potential:* Dispersion is not allowed in settings where the dispersed flows might cause erosion or flooding problems, either onsite or on adjacent properties.
- *Site topography*: Dispersion flowpaths are prohibited in and near certain sloped areas (refer to flowpath requirements below).

### *5.3.1.2. General Design Criteria for Dispersion Flowpaths*

Flowpath design requirements that are common to all dispersion BMPs are listed below. Additional requirements that are specific to each of the dispersion types are provided in each BMP section.

- The vegetated flowpath shall consist of either undisturbed, well-established native landscape or lawn, or landscape or groundcover over soil that meets the Soil Amendment BMP requirements outlined in *Section 5.1*.
- To ensure that the groundcover is dense to help disperse and infiltrate flows and prevent erosion, the design plans shall specify that vegetation coverage of plants will achieve 90 percent coverage within 1 year.

- The flowpath topography shall promote shallow sheet flow across a width of no less than 6 feet for dispersion points (i.e., splashblocks or rock pads) or the width of the dispersion device (i.e., trench or sheet flow transition zone).
- The dispersion flowpath is not typically permitted within landslide–prone areas as defined by the Regulations for Environmentally Critical Areas (SMC, Section 25.09.020).
- The dispersion flowpath is not typically permitted within a setback above a steep slope area (SMC, Section 25.09.020). The setback is calculated as 10 times the height of the steep slope area (to a 500 foot maximum setback). Dispersion within this setback may be feasible provided a detailed slope stability analysis is completed by a geotechnical engineer. The analysis shall determine the effects that dispersion would have on the steep slope area and adjacent properties.
- The dispersion flowpath is not permitted within 100 feet of a contaminated site or landfill (active or closed).
- For sites with septic systems, the point of discharge to the dispersion device (e.g., splash block, dispersion trench) shall be downgradient of the drainfield primary and reserve areas.

### 5.3.2. Full Dispersion

On-site stormwater management, flow control, and/or water quality treatment standards may be provided using full dispersion as presented in the SWMMWW. The requirements for full dispersion are difficult to achieve in an urban setting. As an example, residential developments must preserve 65 percent of a site in a forested or native condition and limit the impervious site coverage to 10 percent. Given the large extent of vegetative cover required for full dispersion, these credits will most likely only apply to Seattle Parks or large campus projects.

Refer to BMP T5.30 in Volume V of the SWMMWW for full dispersion applicability, site considerations, design criteria, modeling requirements, and minimum construction requirements.

## 5.3.3. Splashblock Downspout Dispersion

### 5.3.3.1. Description

Splashblock downspout dispersion consists of a splashblock or crushed rock pad used to disperse downspout flows to a downslope well-vegetated flowpath of at least 50 feet.

### 5.3.3.2. Performance Mechanisms

Splashblock downspout dispersion can provide flow control via attenuation, soil storage, and losses to infiltration, evaporation, and transpiration.

### 5.3.3.3. Applicability

Splashblock downspout dispersion can be designed to provide on-site stormwater management and flow control. This BMP can be applied to meet or partially meet the requirements listed below. If the designer implements a dispersion BMP to meet water quality treatment standards, the BMP shall be designed using the additional design requirements for basic filter strips per *Section 5.8.4*.

| BMP | On-site | | Flow Control | | | Water Quality | | | | Conveyance |
|---|---|---|---|---|---|---|---|---|---|---|
| | List | Standard | Forest | Pasture | Peak | Basic | Enhanced | Oil Control | Phosphorus | |
| Splashblock downspout dispersion | ✓ | ✓[a] | ✓[a] | ✓[a] | ✓ | ✓[b] | | | | |

[a] Standard may be partially or completely achieved depending upon underlying soil type.

[b] Must meet additional design requirements for basic filter strips (refer to *Section 5.8.4*).

### 5.3.3.4. Site Considerations

General site considerations for determining the feasibility of dispersion BMPs for a particular site are provided in *Section 5.3.1.1*. Refer to *Appendix C* for additional infeasibility criteria for the On-site List Approach.

### 5.3.3.5. Design Criteria

This section provides a description and requirements for the components of splashblock downspout dispersion. Typical components of splashblock downspout dispersion are shown in Figure 5.2. Design criteria are provided in this section for the following elements:

- Contributing area
- Splashblock or rock pad
- Dispersion flowpath
- Overflow

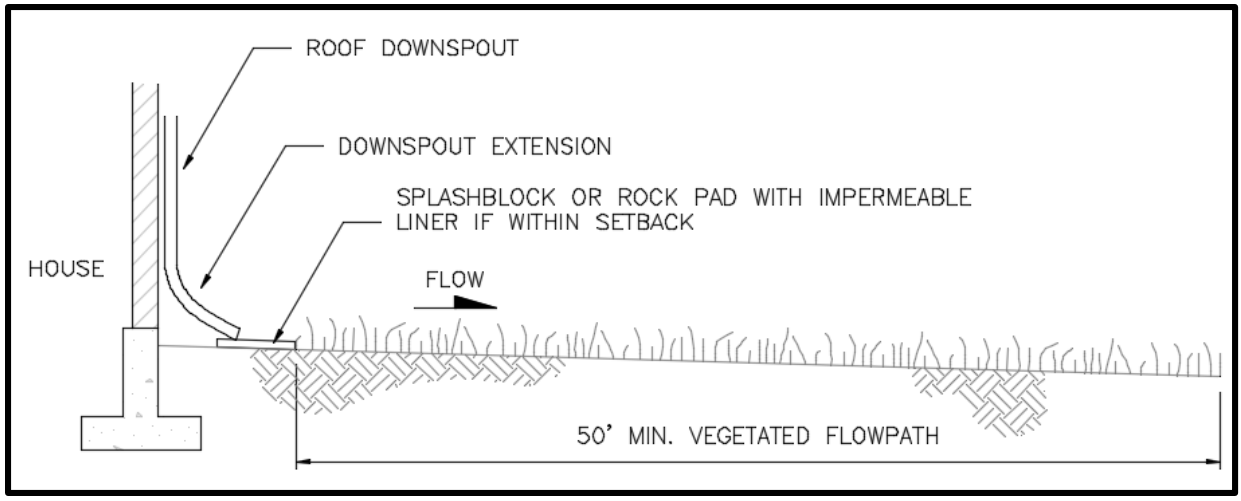


**Figure 5.2. Typical Downspout Splashblock Dispersion.**

Some of the critical requirements for splashblock downspout dispersion (e.g., flowpaths, setbacks) are shown in Figure 5.3.

## Contributing Area

A maximum of 700 square feet of roof area may drain to each splashblock. If the roof is a vegetated roof, contributing areas larger than 700 square feet may be approved.

## Splashblock or Rock Pad

A splashblock or a pad of crushed rock (2 feet wide by 3 feet long by 6 inches deep) shall be placed at each downspout point of discharge.

There are two approved methods for splashblock downspout dispersion:

- *Splashblock/Rock Pad*: If the ground is sloped away from the foundation, and there is adequate vegetation and area for effective dispersion, splashblocks/rock pads will typically be adequate to disperse stormwater runoff.
- *Splashblock/Rock Pad with downspout extension:* If the ground is fairly level, the building includes a basement, or if foundation drains are proposed, splashblocks with downspout extensions should be used to move the point of discharge away from the foundation. Downspout extensions can include piping to a splashblock/rock pad a considerable distance from the downspout.

The dispersion device (e.g., end of splash block, edge of rock pad, or edge of dispersion trench) shall be at least 5 feet from a structure. A 10-foot setback from a building with a basement is recommended. The rock pad shall have an impermeable liner within this setback.

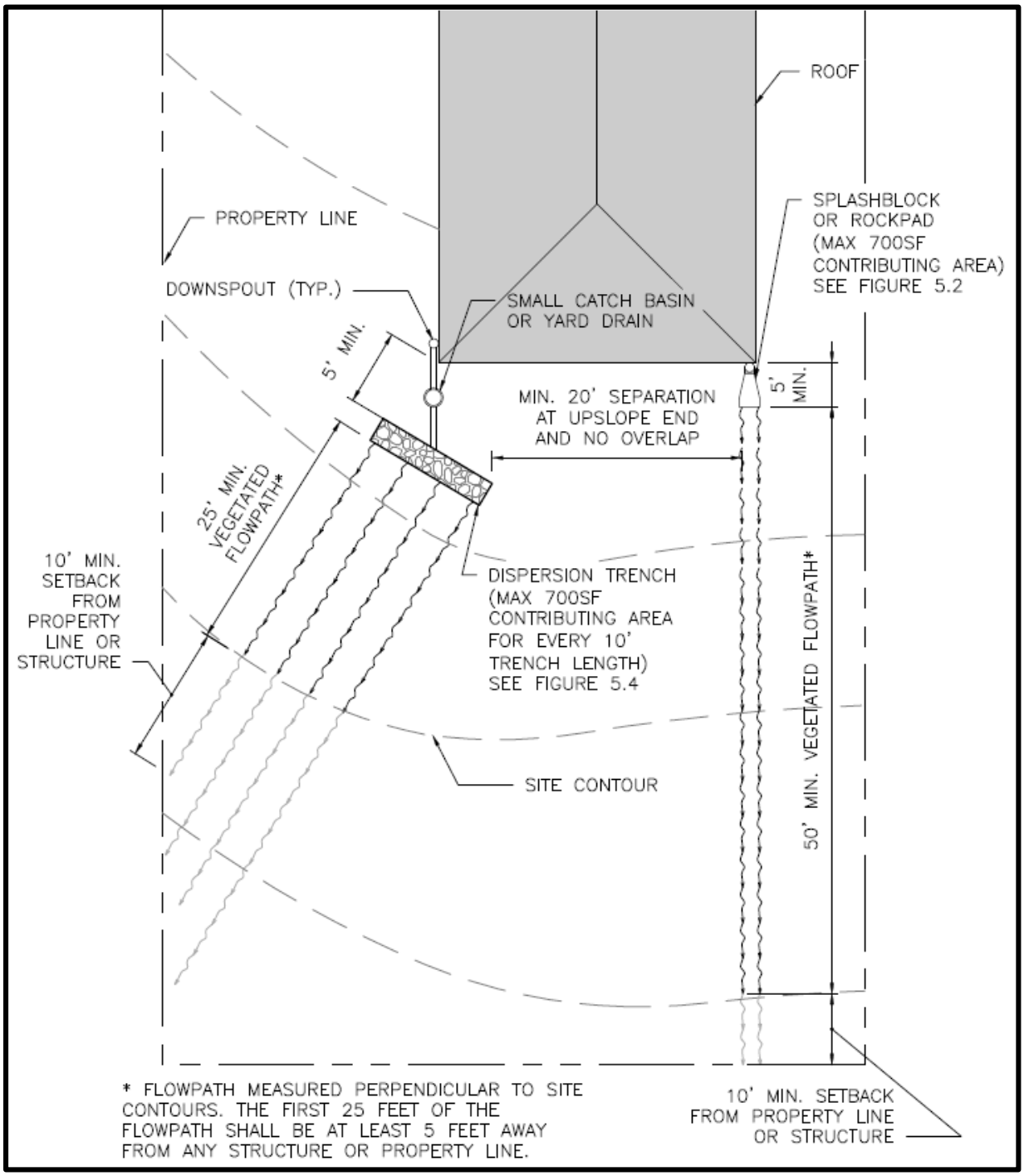


**Figure 5.3. Typical Downspout Splashblock and Dispersion Trench Plan.**

### Dispersion Flowpath

The general minimum requirements for the dispersion flowpath are provided in *Section 5.3.1.2*. Additional flowpath requirements specific to splashblock downspout dispersion are listed below and shown in Figure 5.3:

- Provide a vegetated flowpath of at least 50 feet between the dispersion device (e.g., splash block, rock pad) and any slope over 15 percent, stream, wetland, lake, or other hard surface. Critical area buffers may count toward flowpath lengths. Measure the flowpath length perpendicular to site contours.
- Down gradient of the required 50 foot flowpath, an additional 10 feet shall be provided before the flowpath intersects a property line (excluding the property line abutting the right-of-way) or encounters a structure.
- Install the first 25 feet of the dispersion flowpath at least 5 feet from any structure or property line.
- Provide a separate flowpath for each downspout dispersion device. For the purpose of maintaining adequate separation of flows discharged from adjacent dispersion devices, space vegetated flowpaths at least 20 feet apart at the upslope end and do not overlap with other flowpaths at any point along the flowpath lengths.
- For the purpose of measuring setbacks to structures, property lines or other flowpaths, assume the flowpath width to be 3 feet extending from the center line of the splashblock or rock pad. Measure setbacks from the edge of the assumed flowpath.

### Overflow

Identify the overland flowpath for each downspout dispersion point. Consider surface flows that may extend beyond the design flowpath length. Do not allow flow to cause erosion or flooding onsite or on adjacent properties.

## *5.3.3.6. BMP Credits*

### Credit for On-site List Approach

The hard surface area dispersed using splashblock downspout dispersion meets the On-site List Requirement (refer to *Section 3.3.1* and *Appendix C* for infeasibility criteria).

### Pre-sized Approach for Flow Control

The Pre-sized Approach may be used for projects with new and replaced hard surface areas up to 10,000 square feet. Under the Pre-sized Approach (refer to *Section 4.1.2*), flow control credits may be achieved by using downspout dispersion. Credits are provided in Table 5.4, organized by flow control standard. These credits can be applied to reduce the hard surface area requiring flow control. A 100 percent credit means that the flow control goal is achieved and no further control is required for the area from which runoff is dispersed. If partial credit is received, the standard is not achieved and additional flow control measures may be required. As an example, for a site subject to the Pre-developed Pasture Standard, a dispersed hard surface area would receive a 90 percent credit. Therefore, 90 percent of the

hard surface area dispersed can be excluded from flow control calculations. The hard surface area (area used to size a downstream flow control BMP) would be calculated as 10 percent of the hard surface area dispersed.

**Table 5.4. Flow Control Credits for Splashblock Downspout Dispersion.**

| Dispersion Type | Credit (%) | |
|---|---|---|
| | Pre-developed Pasture Standard | Peak Control Standard |
| Splashblock Downspout Dispersion | TBD | TBD |

Hard Surface Area Managed = Hard Surface Area Dispersed x Credit (%)/100.

Pre-sized Approach may be used to meet water quality treatment if soil suitability criteria are met (refer to *Section 4.5.2*).

The flow control credits outlined above are applicable only if downspout dispersion meets the minimum design requirements outlined in this section. Alternatively, dispersion can be evaluated using a continuous hydrologic simulation model as described below.

### Modeling Approach for On-site Performance Standard and Flow Control

Continuous hydrologic modeling may be used to quantify the performance of splashblock downspout dispersion relative to the on-site and flow control performance standards using the procedures and assumptions listed in Table 5.5.

**Table 5.5. Continuous Modeling Assumptions for Downspout Dispersion.**

| Variable | Assumption |
|---|---|
| Precipitation Series | Seattle 158-year, 5-minute series. |
| Computational Time Step | 5 minutes. |
| Roof area dispersed | Option 1: Roof area dispersed modeled as lawn over the underlying soil type (e.g., till). Existing slope condition of dispersion flowpath should be used.<br>Option 2: Represent roof runoff dispersion using the lateral flow routine. Modeled flowpath width shall be no more than 6 feet for dispersion points (i.e., splashblocks or rock pads) or the width of the dispersion device (i.e., trench). |

### *5.3.3.7. Minimum Construction Requirements*

Protect the dispersion flowpath from sedimentation and compaction during construction. If the flowpath area is disturbed during construction, restore the area to meet the Soil Amendment BMP requirements in *Section 5.1,* and establish a dense cover of lawn, landscape or groundcover.

### *5.3.3.8. Operations and Maintenance Requirements*

Splashblock downspout dispersion O&M requirements are provided in *Appendix G (BMP No. 24)*.

## 5.3.4. Trench Downspout Dispersion

### 5.3.4.1. Description

Trench downspout dispersion consists of a gravel-filled dispersion trench used to disperse downspout flows to a downslope well-vegetated flowpath of at least 25 feet.

### 5.3.4.2. Performance Mechanisms

Trench downspout dispersion can provide flow control via attenuation, soil storage, and losses to infiltration, evaporation, and transpiration.

### 5.3.4.3. Applicability

Trench downspout dispersion can be designed to provide on-site stormwater management and flow control. This BMP can be applied to meet or partially meet the requirements listed below. If the designer implements a dispersion BMP to meet water quality treatment standards, the BMP shall be designed using the additional design requirements for basic filter strips per *Section 5.8.4*.

| | On-site | | Flow Control | | | Water Quality | | | | |
|---|---|---|---|---|---|---|---|---|---|---|
| **BMP** | **List** | **Standard** | **Forest** | **Pasture** | **Peak** | **Basic** | **Enhanced** | **Oil Control** | **Phosphorus** | **Conveyance** |
| Trench downspout dispersion | ✓ | ✓[a] | ✓[a] | ✓[a] | ✓ | ✓[b] | | | | |

[a] Standard may be partially or completely achieved depending upon underlying soil type.

[b] Must meet additional design requirements for basic filter strips (refer to *Section 5.8.4*).

### 5.3.4.4. Site Considerations

General site considerations for determining the feasibility of dispersion BMPs for a particular site are provided in *Section 5.3.1.1*. Refer to *Appendix C* for additional infeasibility criteria for the On-site List Approach.

### 5.3.4.5. Design Criteria

This section provides a description and requirements for the components of trench downspout dispersion. Some of the critical requirements for trench downspout dispersion (e.g., flowpaths, setbacks) are shown in Figure 5.4. Design criteria are provided in this section for the following elements:

- Downspout dispersion trench
- Dispersion flowpath
- Overflow

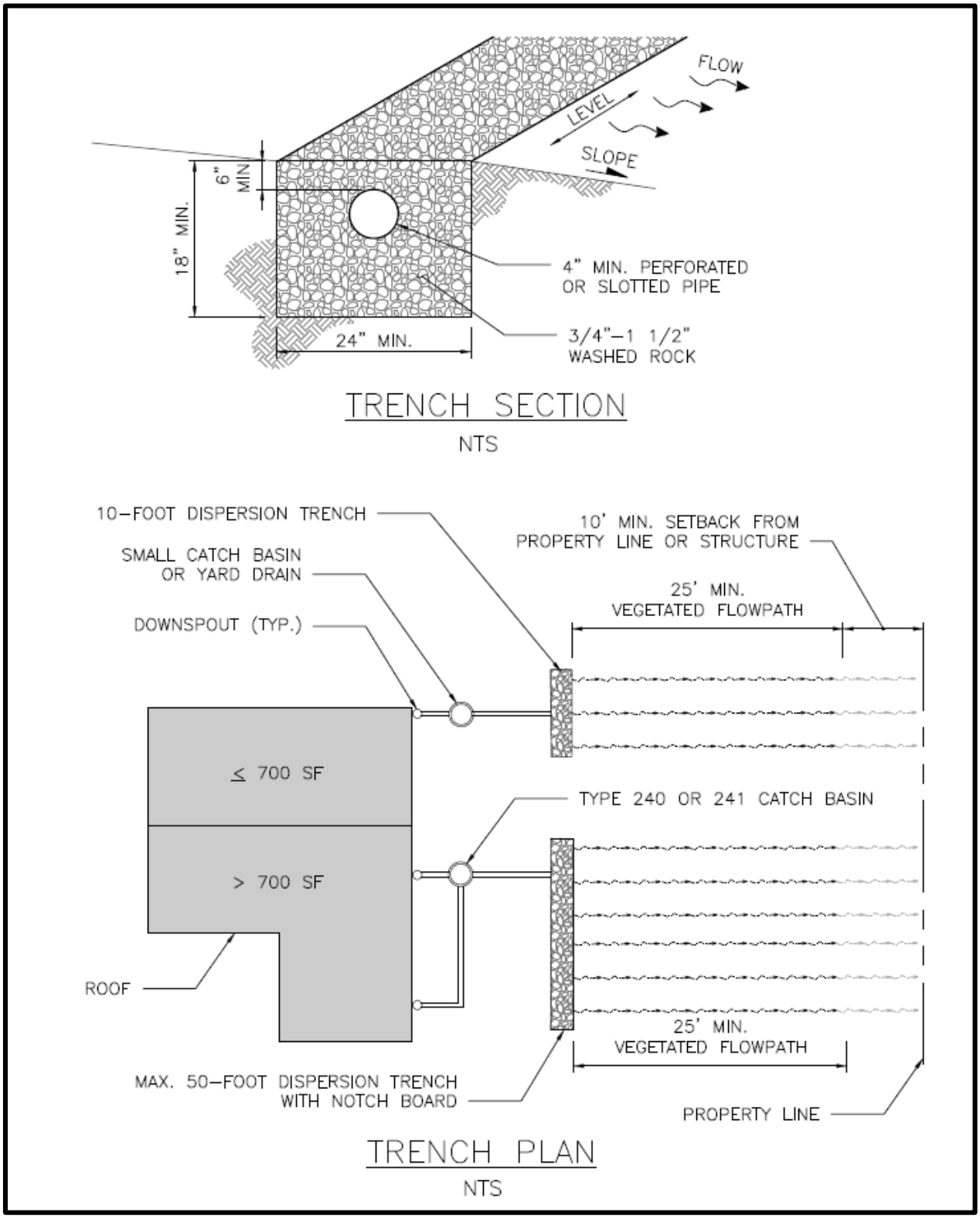


**Figure 5.4. Typical Downspout Dispersion Trench.**

## Downspout Dispersion Trench

The minimum requirements associated with dispersion trench design include the following:

- The trench shall be a minimum of 18 inches deep and 2 feet wide.
- Trenches shall be filled with uniformly-graded, washed gravel with a nominal size from 3/4- to 1-1/2-inch diameter. The minimum void volume shall be 30 percent. These requirements can be met with City of Seattle Mineral Aggregate Type 4.
- The trench shall be level and aligned parallel to site elevation contours to disperse the water to the downslope flowpath. The trench shall be constructed to prevent point discharge and erosion.
- Water shall be conveyed to the trench with a solid pipe and distributed within the trench via a perforated or slotted pipe with a minimum diameter of 4 inches. Pipe cover shall be a minimum of 6 inches.
- Trenches serving up to 700 square feet of roof area shall be 10-foot-long. For roof areas larger than 700 square feet, a dispersion trench with a dispersion device, such as a notched grade board, is recommended. Refer to BMP T5.10B in Volume III of the SWMMWW for typical plan and section views of a downspout dispersion trench with notched grade board. The total length of this design shall provide at least 10 feet of trench per 700 square feet of roof area and not exceed 50 feet. If the roof is a vegetated roof, contributing areas larger than 700 square feet may be approved for a 10-foot trench.
- A setback of at least 5 feet shall be maintained between any edge of the trench and any property line.
- The setback between any edge of the trench and any structure shall be 5 feet. A 10-foot setback from a building with a basement is recommended.

## Presettling

Stormwater inflows shall be routed through a catch basin or yard drain with downturned elbow (trap) upstream of the drywell to capture sediment and reduce the potential for clogging. Catch basins shall be per City of Seattle Standard Plan No. 240, 241, or equivalent.

## Dispersion Flowpath

The general minimum requirements for the dispersion flowpath are provided in *Section 5.3.1.2*. Additional flowpath requirements specific to trench downspout dispersion are listed below and shown in Figure 5.3:

- A vegetated flowpath shall be at least 25 feet between the outlet of the trench and any property line, slope over 15 percent, stream, wetland, lake, structure, or other hard surface. Critical area buffers may count toward flowpath lengths. The flowpath length is measured perpendicular to site contours.
- Down gradient of the required 25 foot flowpath, an additional 10 feet shall be provided before the flowpath intersects a property line (excluding the property line abutting the right-of-way) or encounters a structure.

- The first 25 feet of the dispersion flowpath shall be at least 5 feet from any structure or property line.
- Each downspout dispersion device (e.g., dispersion trench) shall have a separate flowpath. For the purpose of maintaining adequate separation of flows discharged from adjacent dispersion devices, vegetated flowpaths shall be at least 20 feet apart at the upslope end and shall not overlap with other flowpaths at any point along the flowpath lengths.
- For the purpose of measuring setbacks to structures, property lines, and other flowpaths, the flowpath width shall be assumed to be the length of the dispersion trench. Setbacks shall be measured from the edge of the assumed flowpath.

#### Overflow

Identify the overland flowpath for each downspout dispersion point. Consider surface flows that may extend beyond the design flowpath length. Prevent flow from causing erosion or flooding on site or on adjacent properties.

### *5.3.4.6. BMP Credits*

#### Credit for On-site List Approach

The hard surface area dispersed using trench downspout dispersion meets the On-site List Requirement (refer to *Section 3.3.1* and *Appendix C* for infeasibility criteria).

#### Pre-sized Approach for On-site Performance Standard and Flow Control

The Pre-sized Approach may be used for projects with new and replaced hard surface areas up to 10,000 square feet. Under the Pre-sized Approach (refer to *Section 4.1.2*), flow control credits may be achieved by using downspout dispersion. The credits provided in Table 5.6 can be applied to reduce the hard surface area requiring flow control as explained for splashblock downspout dispersion (refer to *Section 5.3.3.6)*.

**Table 5.6. Flow Control Credits for Trench Downspout Dispersion.**

| Dispersion Type | Credit (%) | |
|---|---|---|
| | Pre-developed Pasture Standard | Peak Control Standard |
| Trench Downspout Dispersion | TBD | TBD |

Hard Surface Area Managed = Hard Surface Area Dispersed x Credit (%)/100.

#### Modeling Approach for On-site Performance Standard and Flow Control

Continuous hydrologic modeling may be used to quantify the performance of trench downspout dispersion relative to the on-site and flow control standards using the procedures presented for splashblock downspout dispersion in Table 5.4 (refer to *Section 5.3.3.6)*.

### *5.3.4.7. Minimum Construction Requirements*

Protect the dispersion flowpath from sedimentation and compaction during construction. If the flowpath area is disturbed during construction, restore the area to meet the Soil

Amendment BMP requirements in *Section 5.1* and establish a dense cover of lawn, landscape or groundcover. During construction confirm the dispersion trench surface is level (e.g., laser testing or flow test).

#### *5.3.4.8. Operations and Maintenance Requirements*

Trench downspout dispersion O&M requirements are provided in *Appendix G (BMP No. 24)*.

## 5.3.5. Sheet Flow Dispersion

### 5.3.5.1. Description

Sheet flow dispersion is one of the simplest methods of runoff control. This BMP can be used for any hard surface or pervious surface that is graded to avoid concentrating flows. Because flows are already dispersed as they leave the surface (i.e., not concentrated), they need only traverse a narrow band of adjacent vegetation for effective flow attenuation and treatment.

### 5.3.5.2. Performance Mechanisms

Sheet flow dispersion can provide flow control via flow attenuation, soil storage, and losses to infiltration, evaporation, and transpiration.

### 5.3.5.3. Applicability

Sheet flow dispersion can be designed to provide on-site stormwater management and flow control. This BMP can be applied to meet or partially meet the requirements listed below. If the designer implements a dispersion BMP to meet water quality treatment standards, the BMP shall designed using the additional design requirements for filter strips per *Section 5.8.4*.

| BMP | On-site | | Flow Control | | | Water Quality | | | | Conveyance |
|---|---|---|---|---|---|---|---|---|---|---|
| | List | Standard | Forest | Pasture | Peak | Basic | Enhanced | Oil Control | Phosphorus | |
| Sheet flow dispersion | ✓ | ✓[a] | ✓[a] | ✓[a] | ✓ | ✓[b] | | | | |

[a] Standard may be partially or completely achieved depending upon underlying soil type.

[b] Must meet additional design requirements for basic filter strips (refer to *Section 5.8.4*).

### 5.3.5.4. Site Considerations

General site considerations for determining the feasibility of dispersion BMPs for a particular site are provided in *Section 5.3.1.1*. Sheet flow dispersion is applicable for hard surfaces with slopes less than 15 percent, such as sidewalks, driveways, sport courts, patios, roofs without gutters, or other situations where concentration of flows can be avoided. Refer to *Appendix C* for additional infeasibility criteria for the On-site List Approach.

### 5.3.5.5. Design Criteria

This section provides a description and requirements for the components of sheet flow dispersion. A typical plan for driveway sheet flow dispersion is shown in Figure 5.5. Design criteria are provided in this section for the following elements:

- Contributing area
- Transition zone

- Dispersion flowpath
- Overflow

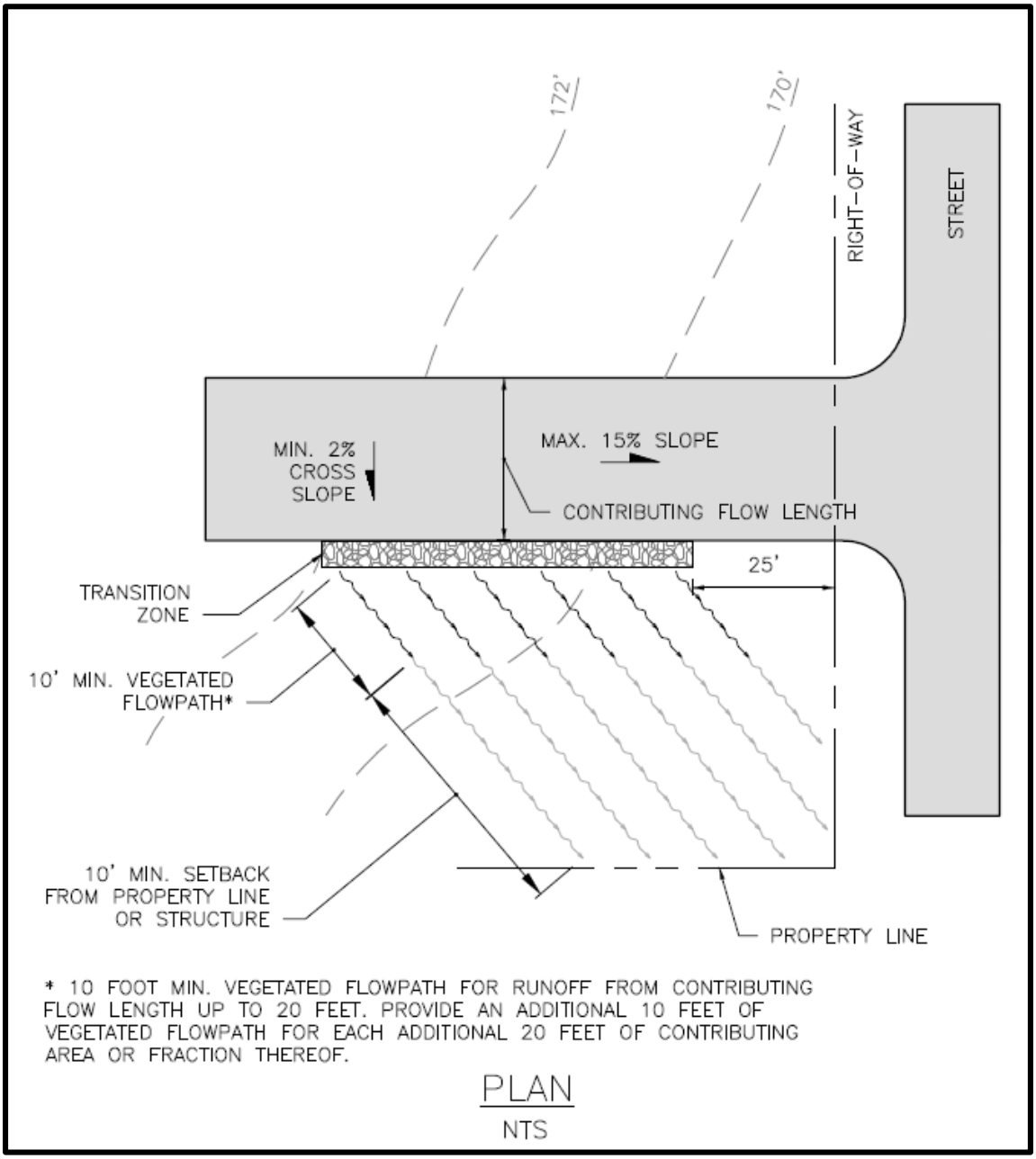


**Figure 5.5. Typical Sheet Flow Dispersion for Flat and Moderately Sloping Driveways.**

## Contributing Area

The hard surface area contributing sheet flow to the dispersion flowpath shall have a slope less than 15 percent. The cross slope towards the transition zone shall be a minimum of 2 percent.

### Transition Zone

A 2-foot-wide transition zone to discourage channeling shall be provided between the edge of the contributing hard surface area and the downslope vegetation. This may be an extension of subgrade material (crushed rock), modular pavement, drain rock, or other material approved by the Director.

### Dispersion Flowpath

The general minimum requirements associated with the dispersion flowpath are provided in *Section 5.3.1.2*. An additional flowpath requirement specific to sheet flow dispersion is as follows:

- Provide a vegetated flowpath of 10 feet to disperse sheet flow runoff from hard surface with a contributing flow length of 20 feet. Provide an additional 10 linear feet of vegetated flowpath for each additional 20 linear feet of contributing flow length or fraction thereof.
- Down gradient of the required flowpath (per the bullet above), an additional 10 feet shall be provided before the flowpath intersects a property line (excluding the property line abutting the right-of-way) or encounters a structure.

### Overflow

Identify the overland flowpath for each dispersion point. Consider surface flows that may extend beyond the design flowpath length. Prevent flow from causing erosion or flooding onsite or on adjacent properties.

## *5.3.5.6. BMP Credits*

### Credit for On-site List Approach

The hard surface area dispersed using sheet flow dispersion meets the On-site List Requirement (refer to *Section 3.3.1* and *Appendix C* for infeasibility criteria).

### Pre-sized Approach for Flow Control

The Pre-sized Approach may be used for projects with new and replaced hard surface areas up to 10,000 square feet. Under the Pre-sized Approach (refer to *Section 4.1.2*), flow control credits may be achieved by using sheet flow dispersion. The credits provided in Table 5.7 can be applied to reduce the hard surface area requiring flow control as explained for splashblock downspout dispersion.

**Table 5.7. Flow Control Credits for Sheet Flow Dispersion.**

| Dispersion Type | Credit (%) | |
|---|---|---|
| | Pre-developed Pasture Standard | Peak Control Standard |
| Sheet flow | TBD | TBD |

Hard Surface Area Managed = Hard Surface Area Dispersed x Credit (%)/100.

Pre-sized Approach may be used to meet water quality treatment if soil suitability criteria are met (refer to *Section 4.5.2*).

## Modeling Approach for On-site Performance Standard and Flow Control

Continuous hydrologic modeling may be used to quantify the performance of sheet flow dispersion relative to the on-site and flow control standards using the procedures and assumptions listed in Table 5.8.

**Table 5.8. Continuous Modeling Assumptions for Sheet Flow Dispersion.**

| Variable | Assumption |
|---|---|
| Precipitation Series | Seattle 158-year, 5-minute series. |
| Computational Time Step | 5 minutes. |
| Hard surface area dispersed | Option 1: Impervious area dispersed modeled as lawn over the underlying soil type (e.g., till). Existing slope condition of dispersion flowpath should be used.<br>Option 2: Represent impervious runoff dispersion using the lateral flow routine (this option shall be used if contributing area includes a vegetated roof or permeable pavement).Modeled flowpath width shall no more than the width of the dispersion device (i.e., sheet flow transition zone). |

### *5.3.5.7. Minimum Construction Requirements*

Protect the dispersion flowpath from sedimentation and compaction during construction. If the flowpath area is disturbed during construction, restore the area to meet the Soil Amendment BMP requirements in *Section 5.1* and establish a dense cover of lawn, landscape or groundcover.

### *5.3.5.8. Operations and Maintenance Requirements*

Sheet flow dispersion O&M requirements are provided in *Appendix G (BMP No. 24)*.

## 5.3.6. Concentrated Flow Dispersion

### 5.3.6.1. Description

Concentrated flow dispersion BMPs disperse concentrated flows from driveways or other pavement through a vegetated pervious area to provide flow control. In a typical application, sheet flow from a ground-level impervious surface is intercepted by a berm or slot drain and conveyed to a dispersion point (i.e., rock pad or dispersion trench).

### 5.3.6.2. Performance Mechanisms

Concentrated flow dispersion can provide flow control via attenuation, soil storage, and losses to infiltration, evaporation, and transpiration.

### 5.3.6.3. Applicability

Concentrated flow dispersion can be designed to provide on-site stormwater management and flow control. This BMP can be applied to meet or partially meet the requirements listed below. If the designer implements a dispersion BMP to meet water quality treatment standards, the BMP shall be designed using the additional design requirements for filter strips per *Section 5.8.4*.

| | On-site | | Flow Control | | | Water Quality | | | | |
|---|---|---|---|---|---|---|---|---|---|---|
| **BMP** | **List** | **Standard** | **Forest** | **Pasture** | **Peak** | **Basic** | **Enhanced** | **Oil Control** | **Phosphorus** | **Conveyance** |
| Concentrated Flow Dispersion | ✓ | ✓[a] | ✓[a] | ✓[a] | ✓ | ✓[b] | | | | |

[a] Standard may be partially or completely achieved depending upon underlying soil type.

[b] Must meet additional design requirements for basic filter strips (refer to *Section 5.8.4*).

### 5.3.6.4. Site Considerations

General site considerations for determining the feasibility of dispersion BMPs for a particular site are provided in *Section 5.3.1.1*. Refer to *Appendix C* for additional infeasibility criteria for the On-site List Approach.

### 5.3.6.5. Design Criteria

This section provides a description and requirements for the components of concentrated flow dispersion. A typical plan for concentrated flow dispersion for steep driveways is shown in Figure 5.6. Design criteria are provided in this section for the following elements:

- Contributing area
- Berm or slotted drain
- Rock pad (dispersion device option 1)
- Downspout dispersion trench (dispersion device option 2)
- Dispersion flowpath
- Overflow

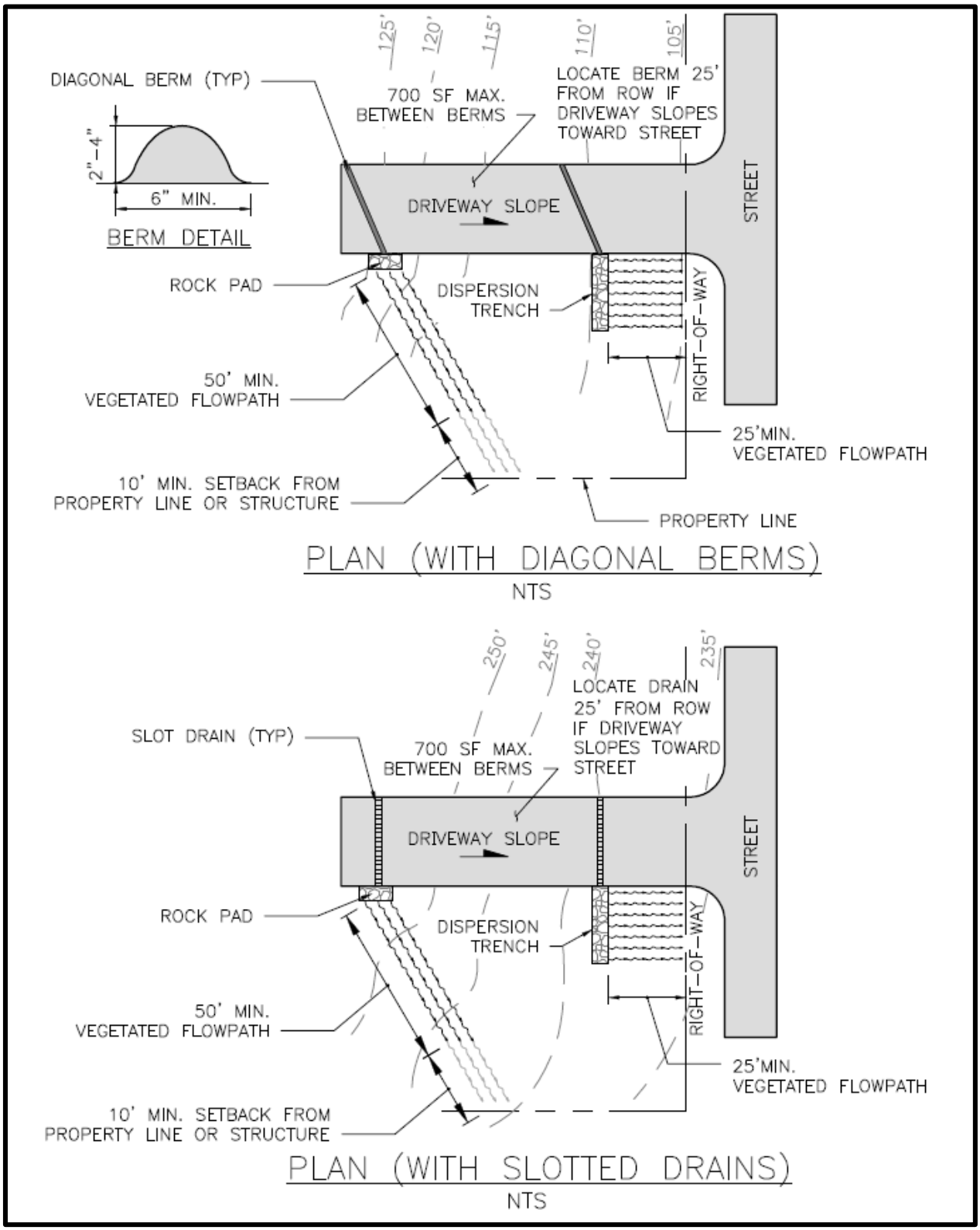


**Figure 5.6. Typical Concentrated Flow Dispersion for Steep Driveways.**

### Contributing Area

A maximum of 700 square feet of impervious area may drain to each concentrated flow dispersion device (i.e., rock pad or dispersion trench). Larger contributing areas may be approved for other types of hard surfaces (e.g., permeable pavement).

### Berm or Slotted Drain

A slotted drain, diagonal berm, or similar measure shall be provided to direct flow to the rock pad or dispersion trench.

### Rock Pad (if selected)

If selected as the dispersion device, a pad of crushed rock (2 feet wide by 3 feet long by 6 inches deep) shall be placed at the point of discharge. The downstream edge of rock pad shall be at least 5 feet from a structure. A 10-foot setback from a building with a basement is recommended. The rock pad shall have an impermeable liner within setback.

### Dispersion Trench (if selected)

If selected as the dispersion device, the dispersion trench design shall meet the following minimum requirements:

- The trench shall be a minimum of 18 inches deep and 2 feet wide.
- The trench shall be level and aligned parallel to site elevation contours to disperse the water to the downslope flowpath. The trench shall be constructed to prevent point discharge and erosion.
- Trenches serving up to 700 square feet of impervious area shall be 10-foot-long. If the contributing area is not an impervious surface (e.g., permeable pavement), contributing areas larger than 700 square feet may be approved for a 10 foot trench.
- A setback of at least 5 feet shall be maintained between any edge of the trench and any structure or property line. A 10-foot setback from a building with a basement is recommended.

### Dispersion Flowpath

The minimum requirements for the dispersion flowpath are listed below:

- For rock pads, a vegetated flowpath of at least 50 feet shall be provided between the dispersion device any slope over 15 percent, stream, wetland, lake, or other hard surface. Critical area buffers may count toward flowpath lengths. The flowpath length is measured perpendicular to site contours.
- For dispersion trenches, a vegetated flowpath of at least 25 feet shall be provided between the outlet of the trench and any property line, slope over 15 percent, stream, wetland, lake, structure, or other hard surface. Critical area buffers may count toward flowpath lengths. The flowpath length is measured perpendicular to site contours.

- Down gradient of the required flowpath (per the bullets above), an additional 10 feet shall be provided before the flowpath intersects a property line (excluding the property line abutting the right-of-way) or encounters a structure.
- The first 25 feet of the dispersion flowpath shall be at least 5 feet from any structure or property line.
- Each dispersion device shall have a separate flowpath. For the purpose of maintaining adequate separation of flows discharged from adjacent dispersion devices, vegetated flowpaths shall be at least 20 feet apart at the upslope end and shall not overlap with other flowpaths at any point along the flowpath lengths.
- For the purpose of measuring setbacks to structures, property lines, and other flowpaths, the following shall be assumed:
  - The rock pad flowpath width shall be assumed to be 3 feet extending from the center line of the rock pad
  - The dispersion trench flowpath width shall be assumed to be the length of the dispersion trench.
  - Setbacks shall be measured from the edge of the assumed flowpath.

#### Overflow

Identify the overland flowpath for each dispersion point. Consider surface flows that may extend beyond the design flowpath length. Prevent flow from causing erosion or flooding onsite or on adjacent properties.

### *5.3.6.6. BMP Credits*

#### Credit for On-site List Approach

The hard surface area dispersed using concentrated dispersion meets the On-site List Requirement (refer to *Section 3.3.1* and *Appendix C* for infeasibility criteria).

#### Pre-sized Approach for Flow Control

The Pre-sized Approach may be used for projects with new and replaced hard surface areas up to 10,000 square feet. Under the Pre-sized Approach (refer to *Section 4.1.2*), flow control credits may be achieved by using concentrated flow dispersion. The credits provided in Table 5.9 can be applied to reduce the hard surface area requiring flow control as explained for splashblock downspout dispersion.

**Table 5.9. Flow Control Credits for Concentrated Flow Dispersion.**

| Dispersion Type | Credit (%) | |
|---|---|---|
| | Pre-developed Pasture Standard | Peak Control Standard |
| Concentrated Flow Dispersion | TBD | TBD |

Hard Surface Area Managed = Hard Surface Area Dispersed x Credit (%)/100

Pre-sized Approach may be used to meet water quality treatment if soil suitability criteria are met (refer to *Section 4.5.2*).

## Modeling Approach for On-site Performance Standard and Flow Control

Continuous hydrologic modeling may be used to quantify the performance of concentrated flow dispersion relative to the on-site and flow control performance standards using the procedures and assumptions listed in Table 5.10.

**Table 5.10. Continuous Modeling Assumptions for Concentrated Flow Dispersion.**

| Variable | Assumption |
|---|---|
| Precipitation Series | Seattle 158-year, 5-minute series. |
| Computational Time Step | 5 minutes. |
| Hard surface area dispersed | Option 1: Impervious area dispersed modeled as lawn over the underlying soil type (e.g., till). Existing slope condition of dispersion flowpath should be used.<br>Option 2: Represent impervious runoff dispersion using the lateral flow routine. (this option shall be used if contributing area includes permeable pavement). Modeled flowpath width shall be no more than 6 feet for dispersion points (i.e., splashblocks or rock pads) or the width of the dispersion device (i.e., trench). |

### *5.3.6.7. Minimum Construction Requirements*

Protect the concentrated flow dispersion flowpath from sedimentation and compaction during construction. If the flowpath area is disturbed during construction, restore the area to meet the Soil Amendment BMP requirements in *Section 5.1* and establish a dense cover of lawn, landscape or groundcover. If a dispersion trench is used, confirm the trench surface is level (e.g., laser testing or flow test).

### *5.3.6.8. Operations and Maintenance Requirements*

Concentrated flow dispersion O&M requirements are provided in *Appendix G (BMP No. 24)*.

## 5.4. Infiltration BMPs

Infiltration BMPs are designed to facilitate percolation of stormwater into the ground. The infiltration BMPs in this section include:

- Infiltration trenches (*Section 5.4.2*)
- Drywells (Section 5.4.3)
- Infiltrating bioretention (*Section 5.4.4*)
- Rain gardens (*Section 5.4.5*)
- Permeable pavement facilities (*Section 5.4.6*)
- Perforated stub-out connections (*Section 5.4.7*)
- Infiltration basins (*Section 5.4.8*)
- Infiltration chambers (*Section 5.4.9*)

Infiltration, where appropriate, is the preferred method for stormwater management because it attempts to restore the predevelopment flow regime. Due to the geologic and topographic conditions in Seattle, not all sites are suitable for stormwater infiltration. The use of infiltration practices may be limited in some areas due to topography and potential landslide hazards. In addition, many locations in Seattle have soils that are underlain by hydraulically-restrictive materials (refer to *Appendix D, Section D-2.2.4*). These relatively impervious layers may limit or preclude infiltration causing perched groundwater conditions during the wet season.

### 5.4.1. General Considerations for Infiltration BMPs

This section provides general requirements that are common to all infiltration BMPs included in this manual. Additional requirements specific to the different types of infiltration BMPs are provided in *Section 5.4.2* through *5.4.9*.

Note that permeable pavement surfaces (*Section 5.6.2*) are not considered infiltration BMPs for the purpose of this manual because they do not receive significant (greater than 10 percent) runoff from other areas and manage only the rain falling on the pavement surface. Although stormwater will infiltrate into the underlying soil, the volume infiltrated is similar to that infiltrated on vegetated permeable surfaces and do not necessitate the restrictions set forth in this section. Similarly, dispersion BMPs (*Section 5.3*) are not considered infiltration BMPs for the purposes of this manual. Although stormwater will infiltrate into the underlying soil, the stormwater is dispersed across a large area (subject to setbacks) making many of the restrictions set forth in this section unnecessary. The specific restrictions and setbacks that are applicable to permeable pavement surfaces and dispersion BMPs are provided in their respective sections in *Chapter 5* of this volume. An exception is that infiltration testing is required for permeable pavement surfaces when hydrologic modeling will be conducted to evaluate performance relative to the flow control, water quality treatment, or the On-Site Performance Standard. Infiltration testing may also be used to demonstrate that permeable pavement surfaces are not feasible for the On-site List.

In addition to shallow infiltration BMPs, *Appendix D* also covers provisions for deep infiltration BMPs, which may include Underground Injection Control (UIC) wells. Deep infiltration BMPs are typically used to direct stormwater past surface soil layers that have lower infiltration rates and into well-draining soil. The depth of the soils layers with lower infiltration rates can vary significantly, so the technique required to reach the well-draining soils will also vary.

UIC wells are regulated by Ecology and the UIC Program (WAC 173-218). If UIC wells are considered, refer to Ecology for requirements, including *Guidance for UIC Wells that Manage Stormwater* (Ecology 2006). Refer to Ecology's website for updates and revisions (www.ecy.wa.gov/programs/wq/grndwtr/uic).

According to Washington Administrative Code (WAC 173-218-030), a UIC well is defined as "a well that is used to discharge fluids into the subsurface. A UIC well is one of the following: (1) A bored, drilled or driven shaft, or dug hole whose depth is greater than the largest surface dimension; (2) an improved sinkhole; or (3) a subsurface fluid distribution system." UIC well systems meeting the above criteria may include drywells, pipe or french drains, drain fields, and other similar devices that are used to discharge stormwater directly into the ground. Infiltration trenches with perforated or slotted pipe used to disperse and inject flows are also considered to be UIC wells.

The person responsible for the infiltration facility (i.e., the property owner for private systems) shall determine whether the facility is a regulated UIC well and what requirements apply. Refer to Ecology's UIC program for UIC well requirements.

## 5.4.2. Infiltration Trenches

### 5.4.2.1. Description

Infiltration trenches are trenches backfilled with a coarse aggregate. Stormwater runoff can enter the trench as overland surface flow through a grate or exposed aggregate surface, or as concentrated flow delivered to the aggregate-filled trench using a perforated or slotted distribution pipe.

### 5.4.2.2. Performance Mechanisms

Flow control occurs through temporary storage of stormwater runoff in the spatial voids of the aggregate material and subsequent infiltration of stormwater into the underlying soils. Pollutant removal mechanisms include infiltration, filtration, adsorption, and biodegradation.

### 5.4.2.3. Applicability

An infiltration trench can be designed to provide on-site stormwater management, flow control and/or water quality treatment. This BMP can be applied to meet the requirements listed below.

| | On-site | | Flow Control | | | Water Quality | | | | |
|---|---|---|---|---|---|---|---|---|---|---|
| **BMP** | **List** | **Standard** | **Forest** | **Pasture** | **Peak** | **Basic** | **Enhanced** | **Oil Control** | **Phosphorus** | **Conveyance** |
| Infiltration Trenches | ✓[a] | ✓ | ✓ | ✓ | ✓ | ✓[b] | ✓[b] | | ✓[c] | |

[a] Infiltration trenches can only be considered for compliance with the On-site List requirement when the site measured infiltration rate is at least 5 inches per hour.

[b] Soil suitability criteria for subgrade soils (*Section 4.5.2*) and applicable drawdown requirements (*Section 4.5.1*) also apply.

[c] Refer to treatment train options for infiltration BMPs included in *Section 4.4.3.2*.

### 5.4.2.4. Site Considerations

Site considerations for the applicability of infiltration trenches are provided in *Section 3.2* and *Section 4.5*. Refer to *Appendix C* for additional infeasibility criteria for the On-site List Approach.

### 5.4.2.5. Design Criteria

This section provides a description and requirements for the components of infiltration trenches. Refer to Figures 5.7 and 5.8 for schematics of typical infiltration trenches. Design criteria are provided in this section for the following elements:

- Trench dimensions and layout
- Aggregate material

- Geotextile
- Subgrade
- Flow entrance and presettling
- Perforated pipe
- Observation port
- Overflow

### Trench Dimensions and Layout

The minimum requirements associated with the trench dimensions and layout include the following:

- The minimum depth of an infiltration trench shall be 18 inches.
- The minimum width of an infiltration trench shall be 24 inches. Sides of adjacent trenches shall be a minimum of 5 feet apart.
- The bottom of the trench shall be level.

To maximize the storage depth in the trench, the trench should be oriented parallel to site contour lines. The trench can be placed under a pervious or impervious surface cover to conserve space.

### Aggregate Material

Trenches shall be filled with uniformly-graded, washed gravel with a nominal size from 3/4- to 1-1/2-inch diameter. The minimum void volume shall be 30 percent. These requirements can be met with City of Seattle Mineral Aggregate Type 4.

### Geotextile

Non-woven geotextile fabric, according to the specifications presented in *Appendix E*, shall completely surround the aggregate material. A 6-inch minimum layer of sand may be used as a filter media instead of geotextile at the bottom of the trench, but geotextile is still required on the sides and top of the aggregate material.

### Subgrade

The minimum measured subgrade infiltration rate for infiltration trenches is 5 inches per hour. If infiltration trenches are to be used to meet the water quality treatment requirement, underlying soil shall meet the soil requirements outlined in *Section 4.5.2*.

During construction the subgrade soil surface can become smeared and sealed by excavation equipment. The design shall require scarification or raking of the side walls and bottom of the facility excavation to a minimum depth of 4 inches after excavation to restore infiltration rate.

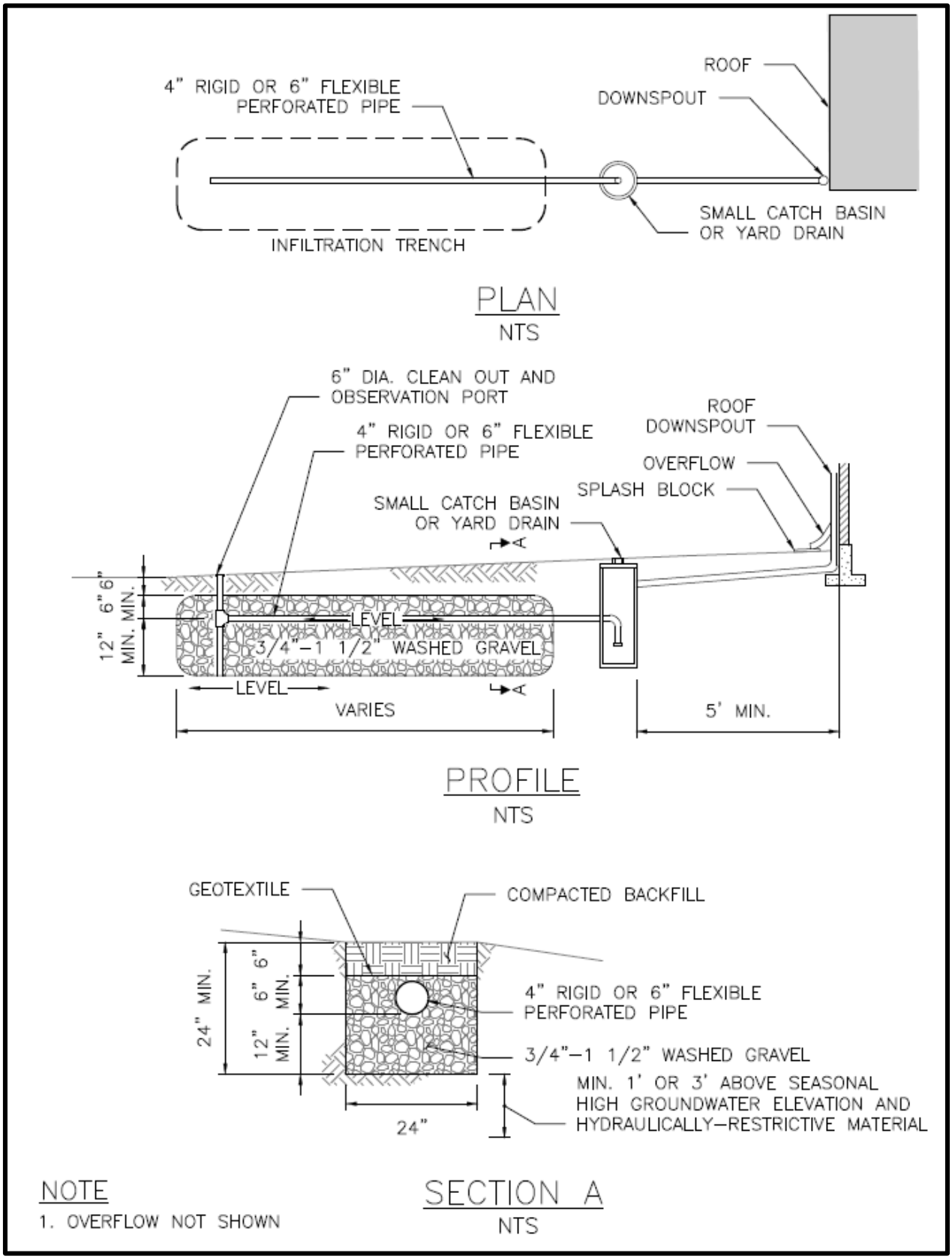


**Figure 5.7. Typical Infiltration Trench Receiving Concentrated Flow.**

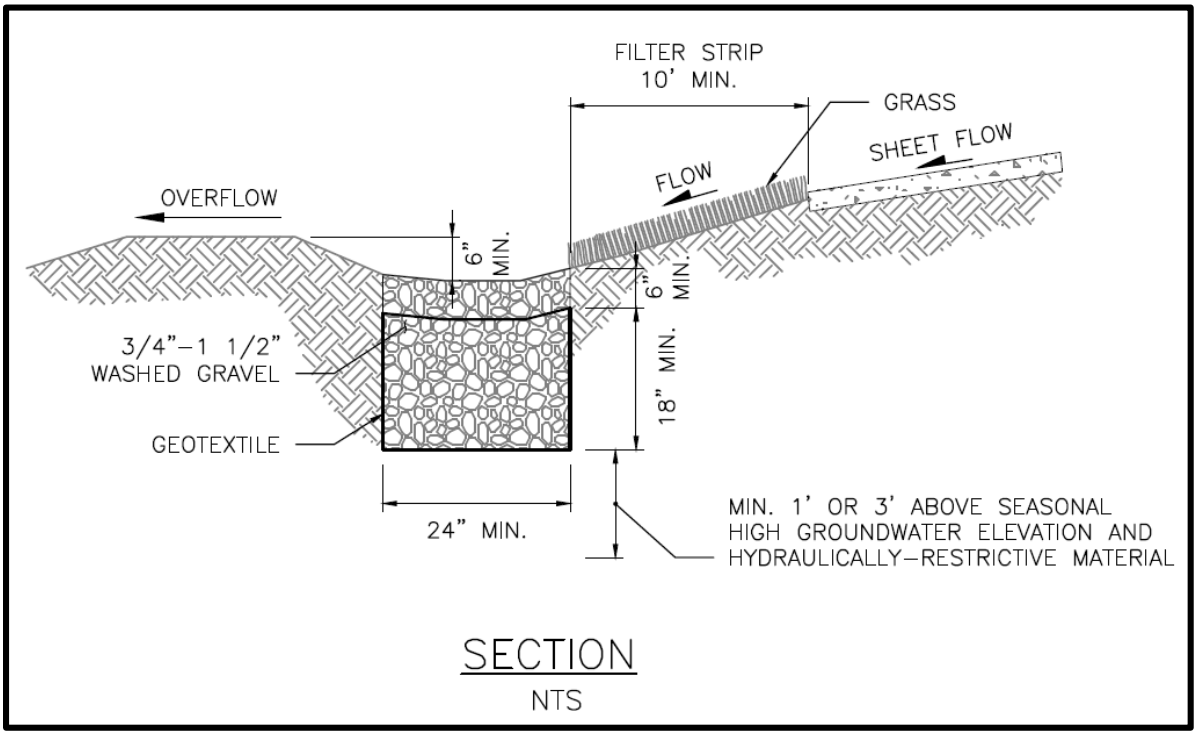


**Figure 5.8. Typical Infiltration Trench Receiving Sheet Flow.**

## Flow Entrance and Presettling

Trenches designed to receive concentrated stormwater flows (refer to Figure 5.7) shall include a small catch basin or yard drain with downturned elbow (trap). Presettling requirements are provided in *Section 4.4.5*.

For trenches designed to receive sheet flow (refer to Figure 5.8), the site shall be graded so that runoff is directed as sheet flow across a minimum 10-foot grass buffer strip to remove larger sediment particles prior to runoff entering the trench. Six inches of gravel shall be placed over the geotextile covering the trench aggregate to allow flows to enter the trench.

## Perforated Pipe

Concentrated flows shall be distributed into the aggregate material using a perforated or slotted subsurface pipe with a minimum diameter of 4 inches.

## Observation Port

Infiltration trenches that are designed to meet flow control and/or water quality treatment requirements and receive runoff from contributing areas of 2,000 square feet or more shall be equipped with an observation port to measure the drawdown time following a storm and to monitor sedimentation to determine maintenance needs. Observation ports shall consist of a 4-inch minimum diameter perforated or slotted pipe that extends to the bottom of the trench (i.e., to the subgrade) and is equipped with a secure well cap.

### Overflow

Trenches shall have an overflow designed to convey any flow exceeding the capacity of the facility per *Section 4.3.4*. If overflow is connected to the public drainage system, a catch basin shall be installed prior to the connection to the public drainage system to prevent root intrusion into public drainage main lines.

To prevent damage to overlying pavement, trenches located beneath pavement shall be constructed with a trench pipe overflow connected to a small yard drain or catch basin with a grate cover. Design shall be such that, if the trench infiltration capacity is exceeded, the trench pipe overflow would occur out of the catch basin to an approved point of discharge. The vertical elevation difference between the pavement surface and the trench pipe overflow invert shall be 1 foot minimum.

## *5.4.2.6. BMP Credits*

### Credit for On-site List Approach

Infiltration trenches can only be considered for compliance with the On-Site List Requirement (refer to *Section 3.3.1* and *Appendix C* for infeasibility criteria) when the site measured infiltration rate is at least 5 inches per hour. The hard surface area managed with an infiltration trench sized according to Table 5.11 meets the requirement. Aggregate-filled trench shall be a minimum of 18 inches deep (as shown in Figures 5.7 and 5.8) and between 24 and 48 inches wide.

**Table 5.11. On-site List Sizing for Infiltration Trenches.**

| Subgrade Soil Design Infiltration Rate | Sizing Factor for Infiltration Trench Area |
|---|---|
| 1 inch/hour | 15% |
| 2.5 inches/hour | 10.5% |
| 5 inches/hour | 5.7% |
| 7.5 inches/hour | 4.8% |
| 10 inches/ hour | 4% |

Infiltration Trench Area = Contributing Hard Surface Area x Factor (%)/100.
Hard Surface Area Managed = Trench Area ÷ Factor (%)/100.

Sizing factors are used to calculate the infiltration trench facility area as a function of the area contributing runoff to the trench as explained below for the Pre-sized Approach. Designers may linearly interpolate sizing factors for intermediate design infiltration rates.

### Pre-sized Approach for Flow Control and Water Quality Treatment

The Pre-sized Approach may be used for projects with new and replaced hard surface areas up to 10,000 square feet. Under the Pre-sized Approach (refer to *Section 4.1.2*), pre-sized infiltration trenches may be used to achieve Pre-developed Pasture, Peak Control and Water Quality Treatment Standards. Sizing factors for infiltration trenches receiving runoff from a hard surface are provided in Table 5.12. Factors are organized by flow control standard, trench depth, and subgrade soil design infiltration rate. A 1.5-foot or 3-foot aggregate storage reservoir depth may be selected. The aggregate storage reservoir is the subsurface aggregate

layer below the overflow invert elevation that stores water for infiltration into the underlying subgrade soils (refer to Figures 5.7 and 5.8). The design rate for the subgrade soils shall be rounded down to the nearest infiltration rate in the pre-sized table (i.e., 0.15, 0.3, 0.6, 1.0, or 2.5 inch per hour).

To use these sizing factors to meet flow control standards, the facility shall meet the general requirements for infiltration trenches outlined in this section, plus the following specific requirements:

- The trench area shall be sized using the applicable sizing factor.
- The average aggregate storage reservoir depth across the trench shall be set at the designated height (1.5 or 3 feet). For intermediate ponding depths (between 1.5 and 3.0 feet), the sizing factor may be linearly interpolated.
- To use these pre-sized infiltration trenches to meet water quality treatment, the underlying soil shall meet soil requirements specified in *Section 4.5.2*.
- The aggregate storage reservoir shall be composed of Mineral Aggregate Type 4 or approved equal.
- Invert of overflow shall be set at top of the storage reservoir to provide the required aggregate storage reservoir depth (e.g., pipe invert set at 1.5 or 3 feet if the bottom of the trench is flat).

**Table 5.12. Sizing Factors for Infiltration Trenches.**

| Trench Depth | Subgrade Soil Design Infiltration Rate | Sizing Factor for Infiltration Trench Area | | |
|---|---|---|---|---|
| | | Pre-developed Pasture Standard | Peak Control Standard | Water Quality Treatment Standard[a] |
| 1.5 feet | 0.15 inch/hour | TBD | TBD | TBD |
| | 0.3 inch/hour | TBD | TBD | TBD |
| | 0.6 inch/hour | TBD | TBD | TBD |
| | 1.0 inch/hour | TBD | TBD | TBD |
| | 2.5 inch/hour | TBD | TBD | TBD |
| 3.0 feet | 0.15 inch/hour | TBD | TBD | TBD |
| | 0.3 inch/hour | TBD | TBD | TBD |
| | 0.6 inch/hour | TBD | TBD | TBD |
| | 1.0 inch/hour | TBD | TBD | TBD |
| | 2.5 inch/hour | TBD | TBD | TBD |

Infiltration Trench Area = Contributing Hard Surface Area x Factor (%)/100.

Hard Surface Area Managed = Trench Area ÷ Factor (%)/100.

[a] Pre-sized Approach may be used to meet basic water quality treatment. Enhanced water quality treatment may be achieved if soil suitability criteria are met (refer to *Section 4.5.2*).

The infiltration trench facility area is calculated as a function of the area contributing runoff to the trench. As an example, to meet the Pre-developed Pasture Standard, the trench area would be equal to 27.3 percent of the contributing area when the subgrade infiltration rate is between 0.25 and 0.5 inches per hour and the trench depth is 1.5 feet.

Alternatively, infiltration trench facilities can be sized using a continuous hydrologic simulation model as described in the subsequent section.

### Modeling Approach for On-site Performance Standard, Flow Control, and Water Quality Treatment

When using continuous hydrologic modeling to size infiltration trenches, the assumptions listed in Table 5.13 shall be applied. It is recommended that infiltration trenches be modeled as a gravel-filled trench with infiltration to underlying soil and an overflow. The contributing area, trench area, and depth should be iteratively sized until the Minimum Requirements for On-site Stormwater Management and/or Flow Control are met (refer to *Volume 1 – Project Minimum Requirements*). General sizing procedures for infiltration facilities are presented in *Section 4.5.1*.

**Table 5.13. Continuous Modeling Assumptions for Infiltration Trench Facilities.**

| Variable | Assumption |
|---|---|
| Precipitation Series | Seattle 158-year, 5-minute series. |
| Computational Time Step | 5 minutes. |
| Inflows to Facility | Surface flow and interflow from total drainage area (including impervious and pervious contributing areas) routed to facility. |
| Precipitation and Evaporation Applied to Facility | Yes, if sited under pervious surface (e.g., lawn). If model does not apply precipitation and evaporation to facility, include the facility area as additional impervious area in the post-developed basin area that contributes runoff to the facility. |
| Aggregate Storage Reservoir Depth | Average depth of aggregate below overflow invert. |
| Aggregate Storage Reservoir Porosity | Assume maximum 30 percent unless test showing higher porosity is provided. |
| Subgrade Soil Design Infiltration Rate | Design infiltration rate (*Section 4.5.2*, *Appendix D)*. |
| Infiltration Across Wetted Surface Area | No (bottom area only). |
| Outlet Structure | Overflow elevation set at average maximum subsurface ponding depth. May be modeled as weir flow over riser edge. Note that freeboard shall be sufficient to allow water surface elevation to rise above the overflow elevation to provide head for discharge. |

### *5.4.2.7. Minimum Construction Requirements*

During construction, it is critical to prevent clogging and over-compaction of the subgrade. Minimum requirements associated with infiltration trench construction include the following:

- **Aggregate Placement and Compaction** – Place the stone aggregate in lifts and compact using plate compactors. A maximum loose lift thickness of 12 inches is allowed. The compaction process aids in adhering the geotextile to the excavation sides, thereby, reducing soil piping, geotextile clogging, and settlement problems.
- **Potential Contamination** – Prevent natural or fill soils from intermixing with the aggregate. Remove all contaminated aggregate and replace with uncontaminated aggregate.

- **Overlap** – Following the stone aggregate placement, fold the geotextile over the stone aggregate to form a 12-inch minimum longitudinal overlap. When geotextile overlaps are required between rolls, overlap the upstream roll a minimum of 2 feet over the downstream roll in order to provide a shingled effect.

#### *5.4.2.8. Operations and Maintenance Requirements*

General O&M requirements for infiltration facilities apply to infiltration trenches. Infiltration trench O&M requirements are provided in *Appendix G (BMP No. 2)*.

## 5.4.3. Drywells

### 5.4.3.1. Description

Drywells are similar to infiltration trenches but are typically deeper and require less surface area. Stormwater is delivered to the drywell by pipe.

### 5.4.3.2. Performance Mechanisms

Flow control occurs through temporary storage of stormwater runoff in the spatial voids of the aggregate material, and subsequent infiltration of stormwater into the underlying soils.

### 5.4.3.3. Applicability

A drywell can be designed to provide on-site stormwater management and/or flow control. This BMP can be applied to meet the requirements listed below.

| BMP | On-site | | Flow Control | | | Water Quality | | | | Conveyance |
|---|---|---|---|---|---|---|---|---|---|---|
| | List | Standard | Forest | Pasture | Peak | Basic | Enhanced | Oil Control | Phosphorus | |
| Drywell | ✓[a] | ✓ | ✓ | ✓ | ✓ | | | | | |

[a] Drywells can only be considered for compliance with the On-site List requirement when the site measured infiltration rate is at least 5 inches per hour.

### 5.4.3.4. Site Considerations

Site considerations for the applicability of drywells are provided in *Section 3.2* and *Section 4.5*. Refer to *Appendix C* for additional infeasibility criteria for the On-site List Approach.

### 5.4.3.5. Design Criteria

This section following provides a description and requirements for the components of drywells. Figure 5.9 shows a typical drywell system. Design criteria are provided in this section for the following elements:

- Drywell dimensions and layout
- Aggregate material
- Geotextile
- Subgrade
- Flow entrance and presettling
- Perforated pipe
- Observation port
- Overflow

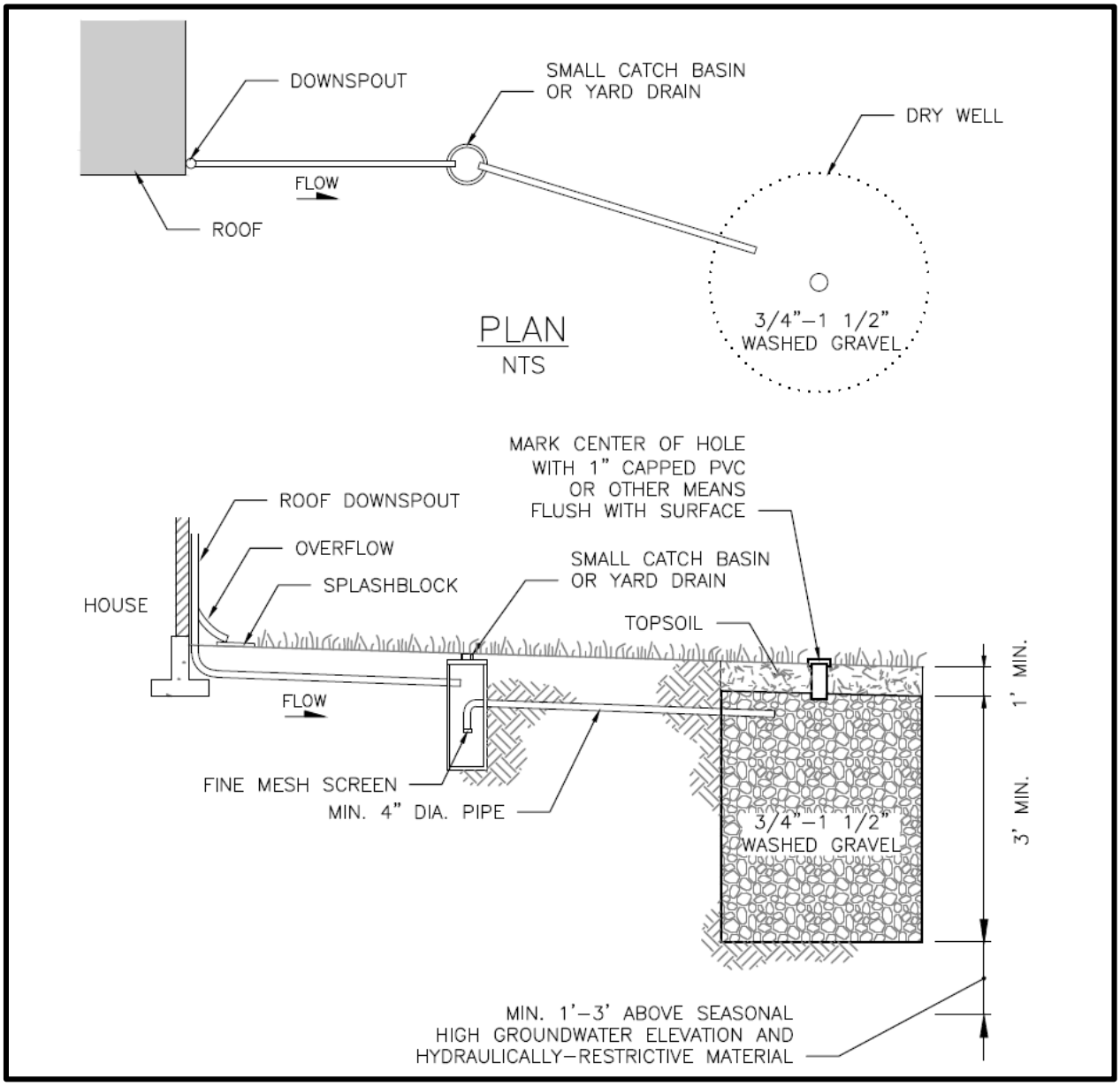


**Figure 5.9. Typical Infiltration Drywell.**

## Drywell Dimensions and Layout

Minimum requirements associated with the drywell dimensions and layout include the following:

- The minimum depth of a drywell (aggregate and cover) shall be 4 feet.
- Spacing between drywells shall be a minimum of 10 feet.
- The drywell can be placed under a pervious or impervious surface cover to conserve space.

### Aggregate Material

Drywells shall be filled with uniformly graded, washed gravel with a nominal size from 3/4- to 1-1/2-inch diameter. The minimum void volume shall be 30 percent. These requirements can be met with City of Seattle Mineral Aggregate Type 4.

### Geotextile

Non-woven geotextile fabric, according to the specifications presented in *Appendix E*, shall be placed around the walls, bottom and top of the drywell aggregate. A 6-inch minimum layer of sand may be used as a filter media instead of geotextile at the bottom of the well, but geotextile is still required on the sides and top of the aggregate material.

### Subgrade

The minimum measured subgrade infiltration rate for infiltration trenches is 5 inches per hour.

During construction the subgrade soil surface can become smeared and sealed by excavation equipment. The design shall require scarification or raking of the side walls and bottom of the facility excavation to a minimum depth of 4 inches after excavation to restore infiltration rate.

### Flow Entrance and Presettling

Flows shall be delivered to the drywell aggregate using a pipe with a 4-inch minimum diameter. Stormwater inflows shall be routed through a catch basin or yard drain with downturned elbow (trap). Presettling requirements are provided in *Section 4.4.5*.

### Observation Port

Drywells that are designed to meet flow control requirements and receive runoff from contributing areas of 5,000 square feet or more shall be equipped with an observation port to measure the drawdown time following a storm and to monitor sedimentation to determine maintenance needs. Observation wells shall consist of a 4-inch minimum diameter perforated or slotted pipe that extends to the bottom of the drywell (i.e., to the subgrade) and is equipped with a secure well cap.

### Overflow

Drywells shall have an overflow designed to convey any flow exceeding the capacity of the facility per *Section 4.3.4*. If overflow is connected to the public drainage system, a catch basin shall be installed prior to the connection to the public drainage system to prevent root intrusion into public drainage main lines.

To prevent damage to overlying pavement, drywells located beneath pavement shall be constructed with a trench pipe overflow connected to a small yard drain or catch basin with a grate cover. Design shall be such that, if the drywell infiltration capacity is exceeded, the trench pipe overflow would occur out of the catch basin to an approved point of discharge. The vertical elevation difference between the pavement surface and the trench pipe overflow invert shall be one foot minimum.

### *5.4.3.6. BMP Sizing*

#### Sizing for On-site List Approach

Drywells can only be selected to meet the On-site List Requirement (refer to *Section 3.3.1* and *Appendix C* for infeasibility criteria) when the site measured infiltration rate is at least 5 inches per hour. The hard surface area managed with a drywell sized according to Table 5.14 meets the requirement. For sizing a drywell downstream of a bioretention cell or permeable pavement facility, refer to *Appendix E, Section E-10*.

**Table 5.14. On-site List Sizing for Drywells.**

| Aggregate Depth | Subgrade Soil Design Infiltration Rate | Sizing Factor for Facility Bottom Area |
|---|---|---|
| | | On-site List |
| 4 feet | 2.5 inch/hour | 2.4% |
| | 5 inches/hour | 2.4% |
| | 7.5 inches/hour | 2.3% |
| | 10 inches/ hour | 2.1% |

Drywell Aggregate Volume (sf) = (Contributing Hard Surface Area (sf)/1,000) x V.

Drywell shall be a minimum of 48 inches in diameter.

#### Pre-sized Approach for Flow Control

The Pre-sized Approach may be used for projects with new and replaced hard surface areas up to 10,000 square feet. Under the Pre-sized Approach (refer to *Section 4.1.2*), pre-sized drywells may be used to achieve Pre-developed Pasture and Peak Control Standards. Sizing factors for drywells receiving runoff from a hard surface are provided in Table 5.15. Factors are organized by flow control standard, drywell depth, and subgrade soil design infiltration rate. A 4-foot or 6-foot aggregate storage reservoir depth may be selected. The aggregate storage reservoir is the subsurface aggregate layer below the overflow invert elevation that stores water for infiltration into the underlying subgrade soils. The design rate for the subgrade soils shall be rounded down to the nearest infiltration rate in the pre-sized table (i.e., 0.25, 0.5, or 1.0 inch per hour). To use these sizing factors to meet flow control standards, the facility shall meet the general requirements for drywells outlined in this section plus the following specific requirements:

- The drywell area shall be sized using the applicable sizing factor.
- The average aggregate storage reservoir depth in the drywell shall be set at the designated height (e.g., 4 feet). For intermediate ponding depths (between 4 and 6 feet), the sizing factor may be linearly interpolated.
- The aggregate storage reservoir shall be composed of Mineral Aggregate Type 4 or approved equal.
- The invert of the overflow shall be set at top of the storage reservoir to provide the required aggregate storage reservoir depth (e.g., pipe invert set at 4 feet if the bottom of the well is flat).

**Table 5.15. Sizing Factors for Drywells.**

| Drywell Depth | Subgrade Soil Design Infiltration Rate | Sizing Factor for Drywell Area | |
|---|---|---|---|
| | | Pre-developed Pasture Standard | Peak Control Standard |
| 4.0 feet | 0.15 inch/hour | TBD | TBD |
| | 0.3 inch/hour | TBD | TBD |
| | 0.6 inch/hour | TBD | TBD |
| | 1.0 inch/hour | TBD | TBD |
| | 2.5 inch/hour | TBD | TBD |
| 6.0 feet | 0.15 inch/hour | TBD | TBD |
| | 0.3 inch/hour | TBD | TBD |
| | 0.6 inch/hour | TBD | TBD |
| | 1.0 inch/hour | TBD | TBD |
| | 2.5 inch/hour | TBD | TBD |

Drywell Area = Contributing Hard Surface Area x Factor (%)/100.

Hard Surface Area Managed = Drywell Area ÷ Factor (%)/100.

The drywell facility area is calculated as a function of the area contributing runoff to the drywell. As an example, to meet the Pre-developed Pasture Standard, the well area would be equal to X.X percent of the contributing area when the subgrade infiltration rate is between 0.5 and 1.0 inches per hour and the well depth is 6.0 feet.

Alternatively, drywell facilities can be sized using a continuous hydrologic simulation model as described in the subsequent section.

### Modeling Approach for On-site Performance Standard and Flow Control

Continuous hydrologic modeling may be used to size drywells using the general infiltration BMP sizing procedures presented in *Section 4.5.1* and the procedures presented for infiltration trenches in *Section 5.4.2.6*.

## *5.4.3.7. Minimum Construction Requirements*

During construction, it is critical to prevent clogging and over-compaction of the subgrade. Minimum requirements associated with drywell construction include the following:

- **Aggregate Placement and Compaction** – Place the stone aggregate in lifts and compact using plate compactors. A maximum loose lift thickness of 12 inches is allowed. The compaction process aids in adhering the geotextile to the excavation sides, thereby, reducing soil piping, geotextile clogging, and settlement problems.
- **Potential Contamination** – Prevent natural or fill soils from intermixing with the aggregate. Remove all contaminated aggregate and replace with uncontaminated aggregate.
- **Overlap** – Following the stone aggregate placement, fold the geotextile over the stone aggregate to form a 12-inch minimum longitudinal overlap. When geotextile overlaps are required between rolls, overlap the upstream roll a minimum of 2 feet over the downstream roll in order to provide a shingled effect.

#### *5.4.3.8. Operations and Maintenance Requirements*

General O&M requirements for infiltration facilities apply to drywells. Drywell O&M requirements are provided in *Appendix G (BMP No. 2)*.

## 5.4.4. Infiltrating Bioretention

### 5.4.4.1. Description

Infiltrating bioretention facilities are shallow earthen depressions or vertical walled open-bottom boxes with a designed soil mix and plants adapted to the local climate and soil moisture conditions. Stormwater is stored as surface ponding before it filters through the underlying bioretention soil. Stormwater that exceeds the surface storage capacity overflows to an adjacent drainage system. Treated water is infiltrated into the underlying soil or, in soils with lower infiltration rates, collected by an underdrain and discharged to the drainage system. Bioretention facilities can be individual cells or multiple cells connected in series.

Two variations of infiltrating bioretention facilities are included in this section:

- **Infiltrating bioretention facility**: Bioretention facilities can have either sloped sides (e.g., an earthen depression) or vertical sides (e.g., vertical walled open-bottom box). Infiltrating bioretention cells are not lined, and may or may not have an underdrain or outlet control structure (e.g., orifice).
- **Infiltrating bioretention facility series**: Bioretention facilities with sloped or vertical sides may be connected in series, with the overflows of upstream cells directed to downstream cells to provide additional flow control and/or treatment and conveyance. Individual cells are defined as separate ponding areas delineated by distinct overflow to a downstream BMP or point of discharge.

Rain gardens are similar to infiltrating bioretention facilities, but are subject to fewer technical requirements (refer to *Section 5.4.5*). Bioretention facilities are considered non-infiltrating if they include a liner or other impermeable barrier to prevent infiltration to the underlying soil (refer to *Section 5.8.2*).

### 5.4.4.2. Performance Mechanisms

Infiltrating bioretention provides flow control via detention, attenuation, and losses due to infiltration, interception, evaporation, and transpiration. Water quality treatment is accomplished through sedimentation, filtration, adsorption, uptake, or biodegradation and transformation of pollutants by soil organisms, soil media, and plants.

### 5.4.4.3. Applicability

Infiltrating bioretention facilities can be designed to provide on-site stormwater management, flow control and/or water quality treatment. This BMP can be applied to meet or partially meet the requirements listed below.

| BMP | On-site | | Flow Control | | | Water Quality | | | | Conveyance |
|---|---|---|---|---|---|---|---|---|---|---|
| | List | Standard | Forest | Pasture | Peak | Basic | Enhanced | Oil Control | Phosphorus | |
| Infiltrating bioretention without underdrain | ✓ | ✓ | ✓ | ✓ | ✓ | ✓ | ✓ | | ✓[b] | ✓[c] |
| Infiltrating bioretention with underdrain | ✓ | ✓[a] | ✓[a] | ✓[a] | ✓ | ✓ | ✓ | | ✓[b] | ✓[c] |

[a] Standard may be partially achieved.

[b] Refer to treatment train options for infiltration BMPs included in Section 4.4.3.2.

[c] Infiltrating bioretention facilities may be connected in series, with the overflows from upstream cells directed to downstream cells to provide conveyance.

### 5.4.4.4. Site Considerations

Site considerations for the applicability of infiltrating bioretention are provided in *Section 3.2* and *Section 4.5*. Additional site considerations apply for nutrient-critical receiving waters:

- **Phosphorous considerations: Infiltrating bioretention is not permitted within 1/4 mile of nutrient-critical receiving waters if the underlying soil does not meet the soil requirements outlined in Section 4.5.2. Bioretention with an underdrain is not permitted if the underdrained water would be routed to a nutrient-critical receiving water.**
- Refer to *Appendix C* for additional infeasibility criteria for the On-site List Approach.

### 5.4.4.5. Design Criteria

This section provides a description, recommendations, and requirements for the components of bioretention facilities. Typical components of bioretention facilities without underdrains and configured sloped and vertical sides are shown in Figures 5.10 and 5.11, respectively. Typical components of bioretention facilities with underdrains and configured sloped and vertical sides are shown in Figures 5.12 and 5.13, respectively. Refer to *Appendix C* for additional infeasibility criteria for the On-site List Approach.

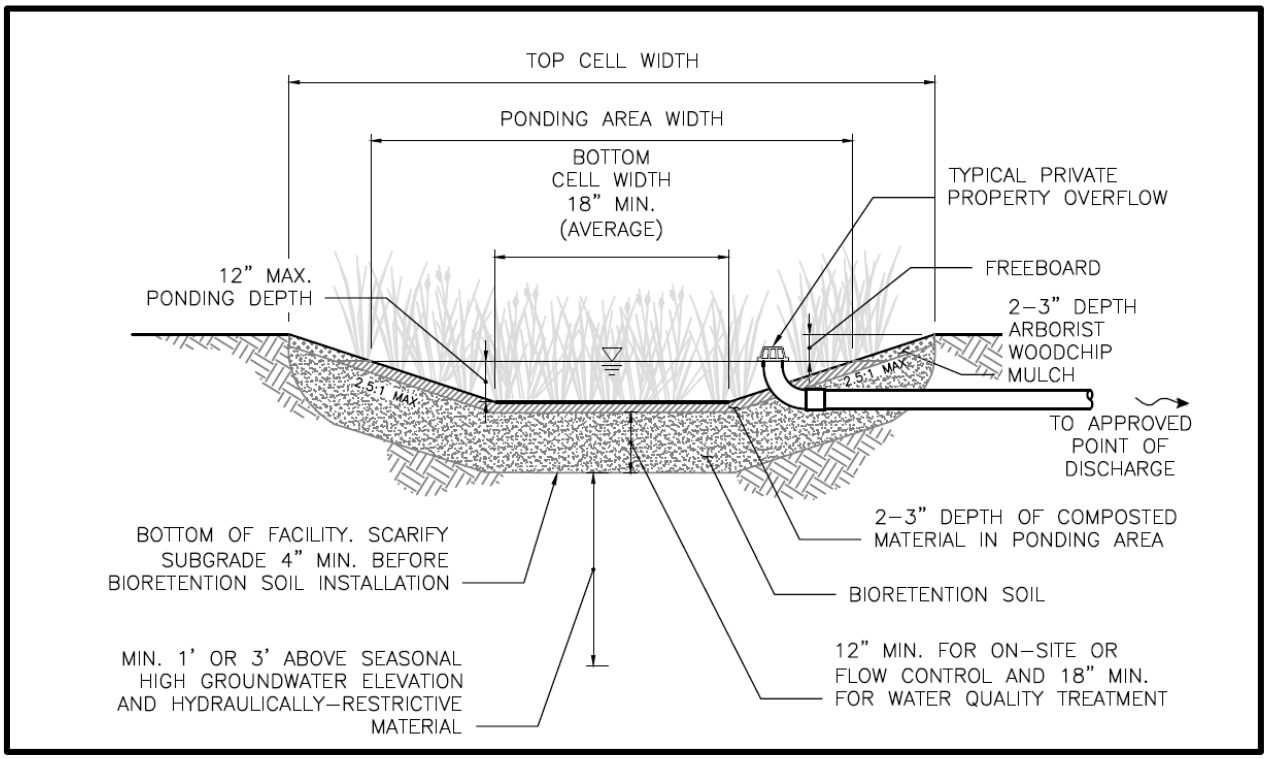


**Figure 5.10. Infiltrating Bioretention Facility with Sloped Sides (without Underdrain).**

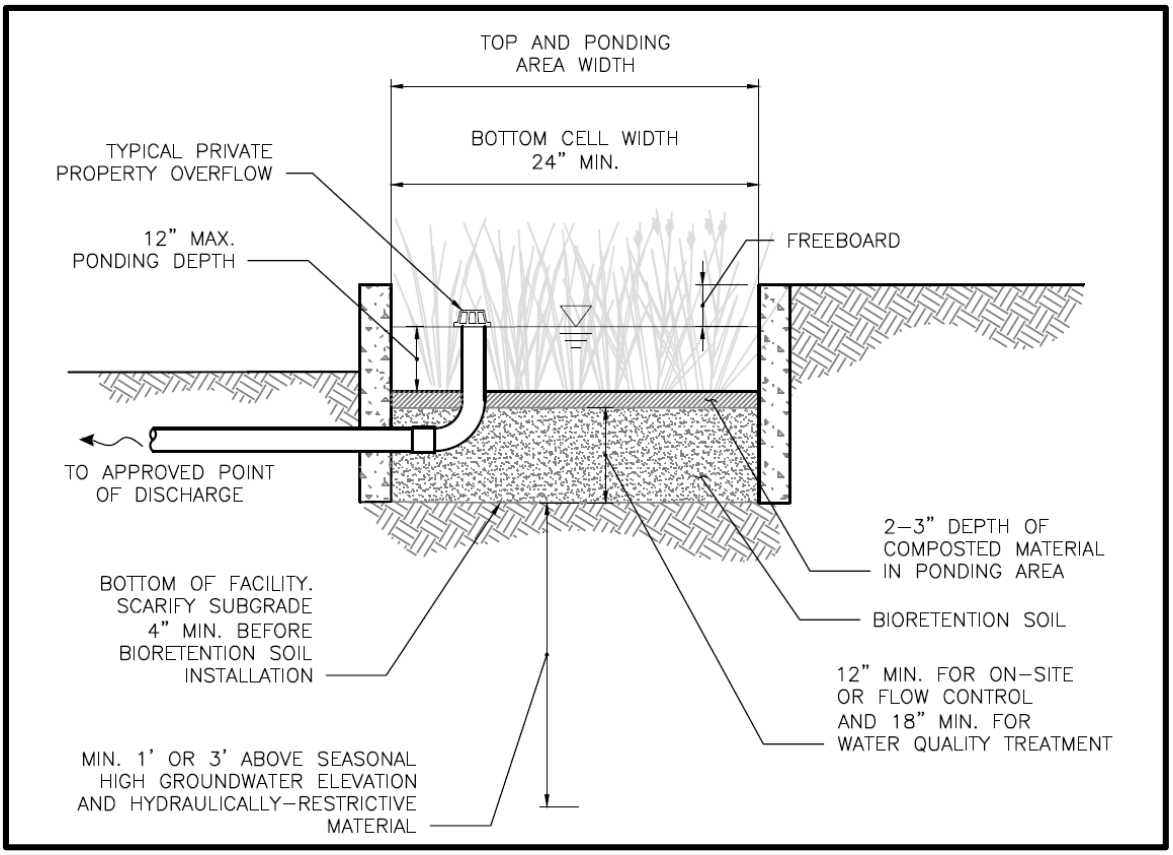


**Figure 5.11. Infiltrating Bioretention Facility with Vertical Sides (without Underdrain).**

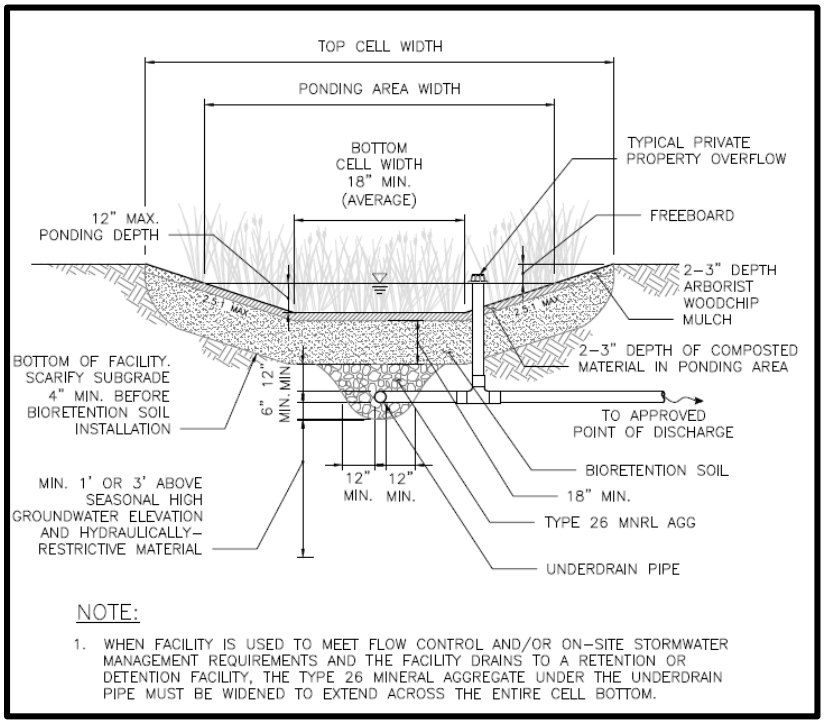


**Figure 5.12. Infiltrating Bioretention Facility with Sloped Sides (with Underdrain).**

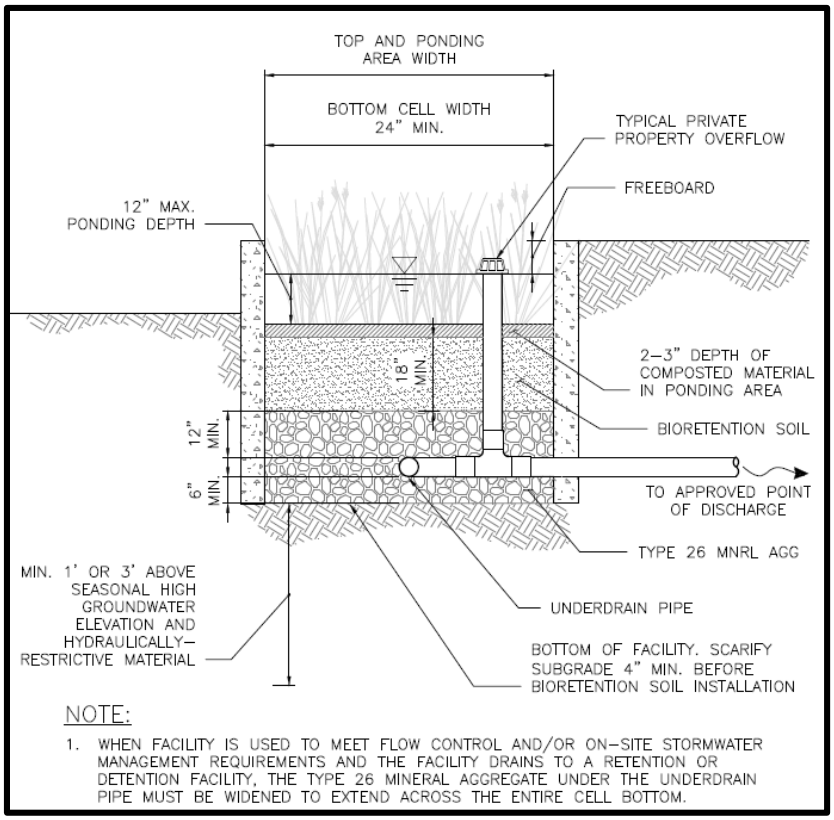


**Figure 5.13. Infiltrating Bioretention Facility with Vertical Sides (with Underdrain).**

Design criteria are provided in this section for the following elements:

- Contributing area
- Flow entrance
- Presettling
- Ponding area
- Bioretention soil
- Subgrade
- Underdrain (if required)
- Flow restrictor (optional)
- Overflow
- Liners (optional)
- Plant material
- Mulch layer
- Observation port

The Low Impact Development Technical Guidance Manual for Puget Sound (Puget Sound LID Manual) provides additional guidance on bioretention design.

## Contributing Area

Bioretention cells are intended to be small and distributed. The contributing area to a bioretention facility is limited as follows:

- No single cell may receive runoff from more than 5,000 square feet of impervious area, except as noted below for a series of bioretention cells.
- Runoff from more than 5,000 square feet of impervious area may be directed to an upstream cell in a bioretention series (interconnected series of cells).

The bioretention facility should be sized for the contributing area routed to the facility. It is recommended that facilities not be oversized because the vegetation in oversized facilities may not receive sufficient stormwater runoff for irrigation, increasing maintenance. If a bioretention facility is oversized beyond the area required to meet the performance standard(s), the maximum allowable sizing factor (cell bottom area as a percent of the contributing area) is 20 percent. The bottom area of the facility that is required to meet the performance standard(s) and the standard(s) being met shall be clearly noted on submitted plans and differentiated from the surrounding landscape.

Stormwater flows from other areas (beyond the area for which the facility is sized) should be bypassed around the facility in order to reduce sediment loading to the cell and the potential for bioretention soil clogging and increased maintenance needs. For water quality treatment facilities, if bypass is not feasible, facilities shall be sized to treat runoff from the entire area

draining to the facility. While it is also preferred that flow control facilities be sized to manage only the area draining to the facility, excess flows may be routed through a bioretention facility sized to meet flow control standard or on-site stormwater management requirement with the following limitations:

- The maximum impervious drainage area that may be routed to a bioretention facility cannot exceed twice the impervious area for which it is sized. Additional runoff contributions from pervious areas are acceptable. No flow control or on-site stormwater management credit is given for runoff from areas beyond the design area.
- Additional runoff routed to a facility shall be clearly noted on submitted plans.
- Presettling calculations shall demonstrate that the water velocities in the vegetated areas of the facility do not exceed 2 feet per second during peak flows with 4 percent annual probability (the 25-year recurrence interval flow) (calculated through the narrowest vegetated cross section of the facility).

### Flow Entrance

Flow entrances shall be sized to capture flow from the drainage area and designed to both reduce the potential for clogging at the inlet and prevent inflow from causing erosion in the facility. Four primary types of flow entrances can be used for bioretention facilities: dispersed flow (e.g., vegetated buffer strips), sheet flow, curb cuts, and concentrated flow (e.g., piped flow). Where feasible and appropriate within the site context, vegetated buffer strips are the preferred entrance type because they slow incoming flows and provide initial settling of particulates.

The minimum requirements associated with the flow entrance design include the following:

- For facilities in the right-of-way, the flow entrance elevation shall be above the overflow elevation.
- For sheet flow into a facility, a minimum 1-inch drop from the edge of a contributing hard surface to the vegetated flow entrance is required. This drop is intended to allow for less frequent maintenance by allowing some sediment/debris buildup at the edge where flow enters the facility. Refer to City of Seattle Standard Plan No. 292 and 293.
- The following requirements apply to roadway and parking lot curb cut flow entrances:
    - The curb cut width shall be sized based on the drainage area, longitudinal slope along the curb, and the cross slope at the inlet.
    - The minimum curb cut width shall be 8 inches for non-right-of-way applications (e.g., parking lots) and 10 inches in the right-of-way (refer to the Seattle Right-of-Way Improvements Manual).
    - The curb cut shall have either a minimum of 8 percent slope from the outer curb face extending to a minimum of 12 inches beyond the back of curb, or provide a minimum of a 2-inch vertical drop from the back of curb to the vegetated surface of the facility.
- If concentrated flows are entering the facility (e.g., pipe or curb cut), flow energy dissipation (e.g., rock/cobble pad or flow dispersion weir) shall be incorporated to reduce the potential for erosion at the inlet.

## Presettling

Presettling to capture debris and sediment load from contributing drainage areas is required at the flow entrance for some bioretention facilities. By having a designated presettling zone, maintenance can be targeted in this area to remove sediment build-up.

The minimum requirements associated with the presettling design include the following:

- The minimum presettling requirements for bioretention facilities sited in the public right-of-way collecting runoff from pollution generating impervious surfaces are provided in Table 5.16.
- The minimum presettling requirements for bioretention facilities sited in all other settings are provided in the Table 5.17.
- If the cell will receive flows from impervious areas beyond the area for which the facility is sized, the presettling measures shall be designed for the entire area draining to the facility.

Note that individual cells shall not receive runoff from more than 5,000 square feet of impervious surface; therefore, presettling will only be triggered for bioretention cell series that receive runoff from areas greater than 5,000 square feet.

The area designated as the presettling zone shall not be included in the bottom area required to meet on-site stormwater management, flow control and/or water quality treatment. However, the presettling zone shall be included in the total landscaped facility top area for evaluation against the 500 square foot threshold for right-of-way project infeasibility (*Appendix C*).

**Table 5.16. Presettling Requirements for Bioretention Facilities in Roadway Projects.**

| Longitudinal Length of Street (L) or Impervious Area[a] (A) Contributing Runoff to a Single Flow Entrance | Presettling Requirements |
|---|---|
| **Residential Streets** | |
| L ≤ 360 linear feet of gutter<br>OR<br>A ≤ 6,700 square feet of ROW impervious area AND Pollution Generating Impervious Surface < 5,000 square feet | No presettling is required. |
| 360 < L ≤ 660 linear feet of gutter<br>OR<br>6,700 < A ≤ 12,300 square feet of ROW impervious area<br>OR<br>Pollution Generating Impervious Surface ≥ 5,000 square feet | The bottom of the first 2 feet of the upstream bioretention cell (at the flow entrance) shall be designated the presettling zone. This bottom area shall be constructed of a concrete pad surrounded by cobbles per detail in the Seattle Right-of-Way Improvements Manual. |
| L > 660 linear feet of gutter<br>OR<br>A > 12,300 square feet of ROW impervious area | Presettling requirements are project specific, to be determined by designer and approved by the Director. |

**Table 5.16 (continued). Presettling Requirements for Bioretention Facilities in Roadway Projects.**

| Longitudinal Length of Street (L) or Impervious Area[a] (A) Contributing Runoff to a Single Flow Entrance | Presettling Requirements |
|---|---|
| **Arterial Streets** | |
| L ≤ 360 linear feet of gutter<br>OR<br>A ≤ 9,000 square feet of ROW impervious area | The bottom of the first 2 feet of the upstream bioretention cell (at the flow entrance) shall be designated the presettling zone. This bottom area shall be constructed of a pre-cast concrete pad surrounded by cobbles per detail in the Seattle Right-of-Way Improvements Manual. |
| 360 < L ≤ 660 linear feet of gutter<br>OR<br>9000 < A ≤ 16,500 square feet of ROW impervious area | The full length of the first cell (in a series), which should have a bottom length of 8–10 feet designated as the presettling zone. This bottom of the first 2 feet of this presettling zone shall have pre-cast concrete pad. This initial bottom area should be followed by a porous weir that allows water to be temporarily detained and slowed down, such as a row of boulders set low (a few inches above the bottom of bioretention cell). Refer to detail in the Right-of-Way Improvements Manual. |
| L > 600 linear feet of gutter<br>OR<br>A > 16,500 square feet of ROW impervious area | Presettling requirements are project specific, to be determined by designer and approved by the Director. |

[a] All ROW impervious area contributing runoff to the facility shall be included (e.g., roadway, sidewalk, driveways). Runoff from ROW pervious surfaces need not be included. Runoff from adjacent non-ROW impervious areas can be considered incidental and need not be included unless assessment of the site determines that the adjacent area that contributes runoff is greater than 10% of the total ROW impervious area.

**Table 5.17. Presettling Requirements for Bioretention Facilities in Non-Roadway Projects.**

| Impervious Area (square feet) Contributing Runoff to a Single Flow Entrance | Presettling Requirements |
|---|---|
| < 5,000 | No presettling is required. Designer to determine if site specific presettling is needed based on upstream area conditions. |
| ≥ 5,000 and < 10,000 | The bottom of the first 2 to 3 feet of the upstream bioretention cell (at the flow entrance) shall be designated the presettling zone. This bottom area of the cell shall be constructed of cobbles, concrete open celled paving grids, plastic lattices filled with gravel or groundcover vegetation, a pre-cast concrete pad, or similar material for collection of sediment for maintenance.<br>Alternatively, a catch basin (such as City of Seattle Standard Specification Type 241 or 240) with a minimum 2-foot sump may be used as the presettling zone. Where the pipe (from the catch basin) daylights into the bioretention cell, provide energy dissipation within the cell. |
| ≥ 10,000 | Presettling requirements are project specific, to be determined by designer and approved by the Director. |

## Ponding Area

The ponding area provides surface storage for storm flows and the first stages of pollutant treatment within the bioretention facility. The minimum requirements for ponding area design for facilities with both side slopes and vertical sides include:

- The bottom area of an individual cell shall be no larger than 800 square feet (limitation is to ensure that bioretention facilities are small-scale and distributed).
- The bottom area of an individual cell shall be no less than 4 square feet.
- The average ponding depth shall be no less than 2 inches.
- The ponding depth shall be no more than 12 inches. In right-of-way areas with high pedestrian traffic, the ponding depth may be restricted to 6 inches or less.
- The surface pool drawdown time shall be a maximum of 24 hours (drain time is calculated as the maximum ponding depth divided by the subgrade soil design infiltration rate). Note that facilities sized using the On-site List and Pre-sized Approach meet this requirement.
- The bottom slope shall be no more than 3 percent.

Additional minimum requirements for ponding area design specific to bioretention facilities with side slopes include the following:

- The maximum planted side slope is 2.5H:1V. In the ROW, if the facility is on a curbless street and less than 50 feet of an intersection, the maximum planted sides slope is 3H:1V. If total facility depth exceeds 3 feet, the maximum planted side slope is 3H:1V. If steeper sides are necessary, rockery, concrete walls, or steeper soil wraps may be used.
- If berming is used to achieve the minimum top facility elevation needed to meet ponding depth and freeboard needs, maximum berm slope is 2.5H:1V, and minimum berm top width is 6 inches. Soil used for berming where the permanent restoration is landscape shall meet the bioretention soil specification and be compacted to a minimum of 90 percent dry density.
- For trees planted within or alongside slopes of the bioretention cell, the maximum side slope around the tree is 1H:1V.
- The average bottom width for the facility shall be no less than 18 inches.

Additional minimum requirements for ponding area design specific to bioretention facilities with vertical sides include the following:

- The facility width (planted area between walls) shall be no less than 2 feet. For plant health, the recommended minimum facility width is 4 feet.

To address traffic and pedestrian safety concerns, the following additional minimum requirements apply to bioretention facilities in the right-of-way:

- The following minimum setbacks shall be provided for facilities with sloped sides:

  - 2 feet minimum from face of curb to top of slope on non-major arterial streets
  - 4 feet minimum from face of curb to top of slope for major arterial street
  - 1 foot minimum from edge of sidewalk to top of slope
- The following minimum setbacks shall be provided for facilities with vertical walls:
  - 3 feet minimum from face of curb to street side face of vertical wall
  - No setback is required from the edge of sidewalk, but the wall shall have a curb
- The maximum vertical drop from the sidewalk to the top of the mulch shall be 22 inches.
- A minimum of one access path across planting strip shall be provided between the street and public sidewalk for each parcel. Access paths shall be a minimum of 5 feet wide. It is preferred that the access path is within 15 feet of the structure access point (such as path to doorway or stairs).
- Bioretention cells shall not impact driveway/alley access. A 2-foot minimum setback shall be provided from the pavement edge of the driveway curb cut wing to the top (top of slope) of bioretention cell.
- A two-foot minimum setback shall be provided from the edge of paving for the public sidewalk/curb ramp at the intersection to the top of slope of the bioretention cell. Curb ramp improvements are required whenever the construction of bioretention cells and associated street improvements remove pavement within the crosswalk area of the street or sidewalk, impact curbs, sidewalks, curb ramps, curb returns or landings within the intersection area, or affect access to or use of a public facility.

## Bioretention Soil

The minimum requirements associated with bioretention soil design include:

- The bioretention soil shall meet City of Seattle Standard Specification 7-21. Soil shall be a well-blended mixture of 2 parts fine compost (approximately 35-40 percent) by volume and 3 parts mineral aggregate (approximately 60-65 percent) by volume. The mixture shall be well blended to produce a homogeneous mix, and have an organic matter content of 4 to 8 percent determined using the Loss on Ignition Method. Materials shall meet the criteria provided below.
- Fine compost for bioretention soil shall meet the criteria below:
  - Gradation. Fine compost shall meet the following size gradations by dry weight when tested in accordance with the U.S. Composting Council *Testing Methods for the Examination of Compost and Composting (TMECC) Test Method 02.02-B, Sample Sieving for Aggregate Size Classification*:

| Sieve Size | Percent Passing | |
|---|---|---|
| | **Minimum** | **Maximum** |
| 2” | 100% | |
| 1” | 99% | 100% |
| 5/8” | 90% | 100% |
| 1/4” | 75% | 100% |

- pH. The pH shall be between 6.0 and 8.5 when tested in accordance with TMECC 04.11-A; "1:5 Slurry pH".
- Physical Contaminants. Manufactured inert material (concrete, ceramics, metal, etc.) shall be less than 1.0 percent by weight as determined by TMECC 03.08-A "percent dry weight basis". Film plastics shall be 0.1% or less, by dry weight.
- Organic Content. Minimum organic matter content shall be 40 percent by dry weight basis as determined by TMECC 05.07A; Loss-On-Ignition Organic Matter Method.
- Salinity. Soluble salt contents shall be less than 5.0 mmhos/cm tested in accordance with TMECC 04.10-A; "1:5 Slurry Method, Mass Basis".
- Maturity. Maturity shall be greater than 80% in accordance with TMECC 05.05-A; "Germination and Vigor". The Engineer may also evaluate compost for maturity using the Solvita Compost Maturity Test at time of delivery. Fine Compost shall score a number 6 or above on the Solvita Compost Maturity Test. Coarse Compost shall score a 5 or above on the Solvita Compost Maturity Test.
- Stability, Stability shall be 7 or below in accordance with TMECC 05.08-B; "Carbon Dioxide Evolution Rate".
- Feedstocks. The compost product shall contain a minimum of 65 percent by volume from recycled plant waste as defined in WAC 173-350-100 as "yard waste", "crop residues", and "bulking agents". A maximum of 35 percent by volume of" post-consumer food waste" as defined in WAC 173-350-100 may be substituted for recycled plant waste. A minimum of 10% food waste in compost is required. The Engineer may approve compost products containing up to 35% biosolids or manure feedstocks for specific projects or soil blends, but these feedstocks are not allowed unless specified, and not allowed in compost used for bioretention soils.
- C:N. Fine Compost shall have a carbon to nitrogen ratio of less than 25:1 as determined using TMECC 04.01 "Total Carbon" and TMECC 04.02D; "Total Kjeldhal Nitrogen". The Engineer may specify a C:N ratio up to 35:1 for projects where the plants selected are entirely Puget Sound native species. Compost may be mixed with fir or hemlock bark meeting requirements of 9-14.4(3) to raise the C:N ratio above 25:1. Coarse Compost shall have a carbon to nitrogen ratio between 20:1 and 45:1.

- Mineral aggregate for bioretention soil shall be analyzed by an accredited lab using the sieve sizes noted below, and shall meet the following gradation:

| Sieve Size | Percent Passing |
|---|---|
| 3/8" Square | 100 |
| U.S. No. 4 | 60 – 100 |
| U.S. No. 10 | 40 – 100 |
| U.S. No. 40 | 15 – 50 |
| U.S. No. 200 | 2 – 5 |

- For facilities without underdrains, bioretention soil depth shall be a minimum depth of 12 inches to meet on-site stormwater management and flow control requirements, and 18 inches to meet water quality treatment requirements.
- For facilities with underdrains, the bioretention soil shall have a minimum depth of 18 inches.

Filter fabrics/geotextile are not required because the gradation between the bioretention soil and the subgrade soil is typically not large enough to result in significant migration of fines from the subgrade into the bioretention soil. Additionally, filter fabrics may clog with downward migration of fines from the bioretention soil material. Therefore, filter fabrics/geotextile shall not be used between the bioretention soil layer and the underlying subgrade. Exceptions may be allowed when specified by a licensed professional as defined in *Appendix D, Section D-1* and documented in geotechnical design recommendations.

### Subgrade

The minimum measured subgrade infiltration rate for infiltrating bioretention facilities without underdrains is 0.6 inches per hour. For infiltrating bioretention facilities with underdrains, the minimum measured subgrade infiltration rate is 0.3 inches per hour where used to meet the On-site List Approach (there is no minimum rate where used to meet other standards).

During construction the subgrade soil surface can become smeared and sealed by excavation equipment. The design shall require scarification or raking of the side walls and bottom of the facility excavation to a minimum depth of 4 inches after excavation to restore infiltration rate.

### Underdrain (If Required)

Underdrain systems (refer to Figures 5.12 and 5.13) must be installed if the subgrade soils have a measured infiltration rate of less than 0.6 inches per hour. Designs utilizing underdrains provide less infiltration and flow control benefits. To improve performance, the underdrain may be further elevated (beyond the 6 inches shown in Figures 5.12 and 5.13), the subsurface gravel reservoir under the pipe may be widened to extend across the entire facility bottom, and/or a flow restrictor may be used.

The underdrain pipe diameter will depend on hydraulic capacity required. The underdrain can be connected to a downstream BMP, such as another bioretention cell as part of a connected system, or to an approved point of discharge.

The minimum requirements associated with the underdrain design include:

- Slotted pipe per City of Seattle Standard Plan No. 291 shall be used.
- Underdrain pipe shall have a minimum diameter of 6 inches in the ROW and 4 inches outside of the ROW.
- Underdrain pipe slope shall be no less than 0.5 percent.
- Pipe shall be placed in filter material and have a minimum cover depth of 12 inches and bedding depth of 6 inches, unless otherwise noted below. Refer to Figures 5.12 and 5.13 for required pipe bedding dimensions. Cover depth may be reduced up to 6 inches in order to discharge stormwater from the facility under gravity flow conditions while meeting the applicable engineering standards, if approved by the Director.

- Filter material shall meet the specifications of City of Seattle Mineral Aggregate Type 26 (gravel backfill for drains, City of Seattle Standard Specifications).
- A non-perforated cleanout (sized to match underdrain diameter) shall be connected to the underdrain every 100 feet minimum. Projects in the right-of-way shall use City of Seattle Standard Plans. Projects on private properties shall use requirements in the Side Sewer Directors' Rule.
- When bioretention facilities with underdrains are used to meet the Minimum Requirements for Flow Control (22.805.080) or the Minimum Requirements for Treatment (22.805.090) and drain to a retention or detention facility, the subsurface gravel reservoir under the underdrain pipe shall be widened to extend across the entire facility bottom.

### Flow Restrictor (Optional)

A flow restrictor assembly may be installed at the outlet of an underdrain system to further detain outflow. When used, the orifice diameter shall be sized to achieve the desired performance goal. The minimum requirements associated with the flow restrictor design include:

- An inspection chamber (catch basin or maintenance hole with clearances per City of Seattle Standard Plans No. 270 and 272A) shall be installed at the flow control assembly to allow for access and maintenance.
- The minimum orifice diameter is 0.25 inches. Note that an orifice diameter smaller than 0.5 inches is allowed for this subsurface application because the bioretention soil serves as a filter, making clogging of the orifice less likely.

### Overflow

A bioretention facility overflow controls overtopping with a pipe, an earthen channel, a weir, or a curb cut installed at the designed maximum ponding elevation and connected to a downstream BMP or an approved point of discharge.

The minimum requirements associated with the overflow design include the following:

- Overflows shall convey any flow exceeding the capacity of the facility per *Section 4.3.4*.
- Freeboard shall be provided to ensure that any overflows are safely conveyed to an approved point of discharge without flooding adjacent properties or sidewalks. The minimum freeboard measured from the invert of the overflow point (e.g., standpipe, earthen channel, curb cut) to the lowest overtopping elevation of the facility is 2 inches for contributing drainage areas less than 1,000 square feet, 4 inches for contributing drainage areas from 1,000 square feet and 10,000 square feet, and 6 inches for contributing drainage areas exceeding 10,000 square feet. The drain pipe, if used, shall have a minimum diameter of 4 inches.
- If the cell will receive flows from impervious areas beyond the area for which the facility is sized, the overflow conveyance infrastructure requires engineering design to safely convey runoff from the entire area draining to the facility.

## Liners (Optional)

Infiltrating bioretention facilities infiltrate stormwater into the underlying soil. However, adjacent roads, foundations, slopes, utilities, or other infrastructure may require that certain infiltration pathways are restricted to prevent excessive hydrologic loading. Two types of hydraulic restricting layers can be incorporated into bioretention facility designs:

- Clay (bentonite) liners as low permeability liners
- Geomembrane liners which completely block flow

For infiltrating bioretention facilities the hydraulic restriction layer shall not be used across the entire facility bottom (refer to *Section 5.8.2*, *Non-infiltrating Bioretention Facilities*). The horizontal footprint of the hydraulic restriction layer must be excluded from the infiltration area (bottom area and/or side slopes) represented for hydrologic modeling.

## Plants

In general, the predominant plantings used in bioretention facilities are species adapted to stresses associated with wet and dry conditions. Soil moisture conditions will vary within the facility from saturated (bottom of cell) to relatively dry (rim of cell). Accordingly, wetland plants may be planted in the lower areas and drought-tolerant species planted on the perimeter of the facility or on mounded areas. Trees selected from the bioretention plant list (*Appendix E*) are allowed and encouraged as part of bioretention.

The minimum requirements associated with the vegetation design include the following:

- The design plans shall specify that vegetation coverage of plants will achieve 90 percent coverage within 2 years. For this purpose, cover is defined as canopy cover and should be measured when deciduous plants are in bloom.
- For facilities receiving runoff from 5,000 square feet or more hard surface, plant spacing and plant size shall be designed by a licensed landscape architect to achieve specified coverage.
- The plants shall be sited according to sun, soil, wind, and moisture requirements.
- At a minimum, provisions shall be made for supplemental irrigation/watering during the first two growing seasons following installation and in subsequent periods of drought.
- Plants for bioretention facilities sited in the right-of-way shall be selected from the bioretention plant list in *Appendix E*.

Refer to the Puget Sound LID Manual for guidance on plant selection and recommendations for increasing survival rates. Recommended planting lists can be found in the Puget Sound LID Manual, the Right-of-Way Improvements Manual, and the Seattle Green Factor plant list(refer to DPD Director's Rule 10-2011).

## Mulch Layer

Properly selected organic mulch material reduces weed establishment, regulates soil temperatures and moisture, and adds organic matter to the soil. Compost and arborist wood

chip mulch are required for different applications within the bioretention cell. Compost mulch is an excellent slow-release source of plant nutrients and does not float, but compost does not suppress weed growth as well as bulkier, higher carbon mulches like arborist wood chips. Arborist wood chips are superior to bark mulch in promoting plant growth, feeding beneficial soil organisms, reducing plant water stress, and maintaining surface soil porosity.

The minimum requirements associated with organic mulch include:

- Organic mulch in the bottom of the cell and up to the ponding elevation shall consist of coarse compost (per City of Seattle Standard Specification 9-14.4(8)6b). Coarse compost shall meet the requirements for fine compost provided in the *Bioretention Soil Section* and the following gradation by dry weight:

| Sieve Size | Percent Passing | |
|---|---|---|
| | **Minimum** | **Maximum** |
| 3” | 100% | |
| 1” | 90% | 100% |
| 3/4” | 70% | 100% |
| 1/4” | 40% | 6% |

- Organic mulch on cell slopes above the ponding elevation and the around the rim area shall consist of arborist wood chip mulch (per City of Seattle Standard Specification 9-14.4(4)) Arborist wood chip mulch shall meet the criteria below:
  - Arborist wood chip mulch shall be coarse ground wood chips (approximately 1/2″ to 6″ along the longest dimension) derived from the mechanical grinding or shredding of the above-ground portions of trees. It may contain wood, wood fiber, bark, branches, and leaves; but may not contain visible amounts of soil. It shall be free of weeds and weed seeds Including but not limited to plants on the King County Noxious Weed list available at: www.kingcounty.gov/weeds, and shall be free of invasive plant portions capable of resprouting, including but not limited to horsetail, ivy, clematis, knotweed, etc. It may not contain more than 1/2% by weight of manufactured inert material (plastic, concrete, ceramics, metal, etc.).
  - Arborist wood chip mulch, when tested, shall meet the following loose volume gradation:

| Sieve Size | Percent Passing | |
|---|---|---|
| | **Minimum** | **Maximum** |
| 2” | 95 | 100 |
| 1” | 70 | 100 |
| 5/8 | 0 | 50 |
| 1/4” | 0 | 40 |

No particles may be longer than eight inches.

- A minimum of 2 inches and a maximum of 3 inches for both types of organic mulch

In bioretention areas where higher flow velocities are anticipated, an aggregate mulch may be used to dissipate flow energy and protect underlying bioretention soil. Aggregate mulch varies in size and type, but 1- to 1-1/2-inch gravel (rounded) decorative rock is typical. The aggregate mulch shall be washed rock (free of fines) and the area covered with aggregate mulch shall not exceed one fourth of the facility bottom area.

As an alternative to mulch, a dense groundcover may be used. Mulch is required in conjunction with the groundcover until groundcover is established.

### Observation Port

Bioretention cells that are designed to meet flow control and/or water quality treatment requirements and receive runoff from contributing areas of 2,000 square feet or more shall be equipped with an observation port to allow monitoring of the drawdown time through the subsurface layers (e.g., bioretention soil) following a storm. The observation port shall consist of a 4-inch minimum diameter pipe that extends to the bottom of the cell (i.e., to the subgrade) and is hydraulically disconnected from the ponding section but hydraulically connected to the bioretention soil layer and any underlying aggregate storage reservoir. The pipe shall be equipped with a secure well cap. The observation port may be located either within the ponded area or offset outside of the cell to facilitate access. For cells with underdrains, the observation port may be combined with the underdrain cleanout system. The observation port pipe and cover shall be per City of Seattle Standard Plan No. 281. In the right-of-way, use the locking cast iron top.

## *5.4.4.6. BMP Sizing*

### Sizing for On-site List Approach

Infiltrating bioretention may be selected to meet the On-site List Requirement (refer to *Section 3.3.1* and *Appendix C* for infeasibility criteria). To meet the requirement, bioretention must be sized according to the sizing factors provided in Table 5.18. Sizing factors for facilities without underdrains are based on achieving a minimum wetted surface area of 5 percent of the contributing area or meeting the On-site Performance Standard for a pre-developed condition of forest on till (whichever is greater). Sizing factors for facilities with underdrains are increased by 11 percent (i.e., multiplied by a factor of 1.11) to account for reduced performance (due to the presence of an underdrain).

Factors are organized by cell ponding depth, cell side slope, and subgrade design infiltration rate. To select the appropriate sizing factor:

- The subgrade design infiltration rate shall be rounded down to the nearest rate in the sizing table, or sizing factors may be linearly interpolated for intermediate infiltration rates (e.g., between 0.15 and 0.3 inches per hour).
- The design ponding depth shall be rounded down to the nearest depth in the sizing table, or sizing factors may be linearly interpolated for intermediate ponding depths (e.g., between 3 and 4 inches ponding).

**Table 5.18. On-site List Sizing for Infiltrating Bioretention with and without Underdrains.**

| Bioretention Configuration | Ponding Depth | Subgrade Soil Design Infiltration Rate | Sizing Factor for Facility Bottom Area | |
|---|---|---|---|---|
| | | | Without Underdrain | With Underdrain |
| Sloped sides | 2 inches | 0.15 inch/hour | NA[b] | 8.9%[c] |
| | | 0.3 inch/hour | 4.7%[c] | 5.2%[c] |
| | | 0.6 inch/hour | 4.5% | 5.0% |
| | | 1.0 inch/hour | 4.5% | 5.0% |
| | | 2.5 inch/hour | 4.5% | 5.0% |
| | 6-inches | 0.15 inch/hour | NA[a, b] | NA[a] |
| | | 0.3 inch/hour | 3.5% | 3.9% |
| | | 0.6 inch/hour | 3.5% | 3.9% |
| | | 1.0 inch/hour | 3.5% | 3.9% |
| | | 2.5 inch/hour | 3.5% | 3.9% |
| | 12 inches | 0.15 inch/hour | NA[a, b] | NA[a] |
| | | 0.3 inch/hour | NA[a] | NA[a] |
| | | 0.6 inch/hour | 2.3% | 2.6% |
| | | 1.0 inch/hour | 2.3% | 2.6% |
| | | 2.5 inch/hour | 2.3% | 2.6% |
| Vertical sides | 6 inches | 0.15 inch/hour | NA[a, b] | NA[a] |
| | | 0.3 inch/hour | 5.3%[c] | 5.9%[c] |
| | | 0.6 inch/hour | NA[d] | NA[d] |
| | | 1.0 inch/hour | NA[d] | NA[d] |
| | | 2.5 inch/hour | NA[d] | NA[d] |
| | 12 inches | 0.15 inch/hour | NA[a, b] | NA[a] |
| | | 0.3 inch/hour | NA[a] | NA[a] |
| | | 0.6 inch/hour | 5.0% | 5.6% |
| | | 1.0 inch/hour | 5.0% | 5.6% |
| | | 2.5 inch/hour | 5.0% | 5.6% |

NA – not applicable.

[a] Ponding depth and infiltration rate combination do not achieve drawdown requirements.

[b] Underdrain systems shall be installed if the subgrade soils have a measured infiltration rate of less than 0.6 inches per hour.

[c] Sizing factor increased beyond the minimum wetted surface area of 5 percent to meet the On-site Performance Standard for a pre-developed condition of forest on till.

[d] For infiltration rates exceeding 0.3 inches per hour, infiltrating bioretention with vertical sides must have a ponding depth of 12 inches.

Bioretention Facility Bottom Area = Contributing Hard Surface Area x Factor (%)/100.

Hard Surface Area Managed = Bioretention Facility Bottom Area ÷ Factor (%)/100.

The facility shall meet the general requirements for infiltrating bioretention outlined in this section plus the following specific requirements:

- The bottom area shall be sized using the applicable sizing factor.
- It is preferred that the bottom area is flat, but up to 3 percent slope is permitted.

- For facilities with sloped sides, the side slopes within the ponded area shall be no steeper than 2.5H:1V.
- For facilities without underdrains, the bioretention soil depth shall be a minimum of 12 inches for flow control and 18 inches for water quality treatment. For facilities with underdrains, the amended soil shall have a minimum depth of 18 inches.
- The average ponding depth for the cell shall be no less than the selected ponding depth.
- No impermeable liner shall be used.

The *bottom area* for the cell is calculated as a function of the hard surface area routed to it. As an example, the bottom area of the bioretention cell with vertical sides would be equal to 5.3 percent of the hard surface area routed to it when the ponding depth is 6 inches and the design infiltration rate is equal to greater than 0.3 inches per hour.

For facilities with sloped sides, top area is calculated as a function of the cell bottom area and the side slopes up to the total facility depth (i.e., ponding and freeboard depth).

### Pre-sized Approach for Flow Control and Water Quality Treatment

The Pre-sized Approach may be used for projects with new and replaced hard surface areas up to 10,000 square feet. Under the Pre-sized Approach (refer to *Section 4.1.2*), simple equations are used to calculate the size of "pre-designed" bioretention facilities subject to specific design requirements (e.g., side slope, ponding depth). Sizing factors for infiltrating bioretention without underdrains and with underdrains are provided in Tables 5.19 and 5.20, respectively. Note that the modeling conducted to develop sizing factors for bioretention with underdrains did not include infiltration to underlying soil due to modeling constraints at the time of publication.

Pre-sized infiltrating bioretention facilities without underdrains may be used to achieve the Pre-developed Pasture, Peak Control, and Water Quality Treatment Standards. Pre-sized infiltrating bioretention facilities with underdrains may be used to achieve the Peak Control and Water Quality Treatment Standards. Sizing factors are organized by side slopes (i.e., sloped sides or vertical sides), performance standard, facility ponding depth, and subgrade soil design infiltration rate (for facilities without underdrains). To select the appropriate sizing factor:

- The design ponding depth shall be rounded down to the nearest depth in the sizing table, or sizing factors may be linearly interpolated for intermediate ponding depths (e.g., between 6 and 12 inches ponding).
- For facilities without underdrains, round the design infiltration rate for the subgrade soils down to the nearest infiltration rate in the pre-sized table (i.e., 0.15, 0.3, 0.6, 1.0, or 2.5 inches per hour).

**Table 5.19. Sizing Factors for Infiltrating Bioretention without Underdrains.**

| Bioretention Configuration | Ponding Depth | Subgrade Soil Design Infiltration Rate | Sizing Factor for Facility Bottom Area | | |
|---|---|---|---|---|---|
| | | | Pre-developed Pasture Standard | Peak Control Standard | Water Quality Treatment Standard[a] |
| Sloped sides | 2-inches | 0.15 inch/hour | 25.6% | NP | 10.3% |
| | | 0.3 inch/hour | 20.5% | NP | 8.4% |
| | | 0.6 inch/hour | 10.3% | NP | 4.4% |
| | | 1.0 inch/hour | 8.9% | NP | 3.8% |
| | | 2.5 inch/hour | 3.4% | NP | 1.5% |
| | 6-inches | 0.15 inch/hour | NA[b] | NA[b] | NA[b] |
| | | 0.3 inch/hour | 10.9% | 17.7% | 4.7% |
| | | 0.6 inch/hour | 7.0% | 12.2% | 3.0% |
| | | 1.0 inch/hour | 6.0% | 10.7% | 2.6% |
| | | 2.5 inch/hour | 2.3% | 5.3% | 1.0% |
| | 12-inches | 0.15 inch/hour | NA[b] | NA[b] | NA[b] |
| | | 0.3 inch/hour | NA[b] | NA[b] | NA[b] |
| | | 0.6 inch/hour | 4.4% | 8.2% | 1.7% |
| | | 1.0 inch/hour | 3.8% | 7.2% | 1.5% |
| | | 2.5 inch/hour | 1.4% | 3.3% | 0.6% |
| Vertical sides | 6-inches | 0.15 inch/hour | NA[b] | NA[b] | NA[b] |
| | | 0.3 inch/hour | 13.5% | 20.8% | 6.6% |
| | | 0.6 inch/hour | 9.2% | 15.4% | 4.5% |
| | | 1.0 inch/hour | 8.0% | 13.7% | 4.0% |
| | | 2.5 inch/hour | 3.6% | 7.3% | 1.9% |
| | 12-inches | 0.15 inch/hour | NA[b] | NA[b] | NA[b] |
| | | 0.3 inch/hour | NA[b] | NA[b] | NA[b] |
| | | 0.6 inch/hour | 7.0% | 11.2% | 3.6% |
| | | 1.0 inch/hour | 6.2% | 10.1% | 3.2% |
| | | 2.5 inch/hour | 3.0% | 5.7% | 1.6% |

NP – sizing factors not provided; NA – not applicable.

Bioretention Facility Bottom Area = Contributing Hard Surface Area x Factor (%)/100.

Hard Surface Area Managed = Bioretention Facility Bottom Area ÷ Factor (%)/100.

[a] Pre-sized Approach may be used to meet basic water quality treatment. Enhanced water quality treatment may be achieved if soil suitability criteria are met (refer to *Section 4.5.2*).

[b] Ponding depth and infiltration rate combination do not achieve drawdown requirements.

**Table 5.20. Sizing Factors for Infiltrating Bioretention with Underdrains.**

| Bioretention Configuration | Ponding Depth | Sizing Factor for Facility Bottom Area | |
|---|---|---|---|
| | | Peak Control Standard | Water Quality Treatment |
| Sloped sides | 6 inches | 10.7%[a] | 2.6% |
| | 12 inches | 7.2%[a] | 1.5% |
| Vertical sides | 6 inches | 13.7%[a] | 4.0% |
| | 12 inches | 10.1%[a] | 3.2% |

NP – sizing factors not provided; NA- not applicable

Bioretention Facility Bottom Area = Contributing Hard Surface Area x Factor (%)/100

Hard Surface Area Managed = Bioretention Facility Bottom Area ÷ Factor (%)/100

[a] Pre-sized Approach may be used to meet water quality treatment if soil suitability criteria are met (refer to *Section 4.5.2*).When used to meet the Peak Control Standard, the facility size shall not be larger than prescribed by the sizing factor because flow control performance may be diminished for larger facilities (larger facilities will not pond water sufficiently to slow flows).

To use these pre-sized facilities to meet performance standards, the bioretention facility shall meet the general requirements outlined in this section plus the following specific requirements:

- The bottom area shall be sized using the applicable sizing factor.
- It is preferred that the bottom area is flat, but up to 3 percent slope is permitted.
- For facilities with sloped sides, the side slopes within the ponded area shall be no steeper than 2.5H:1V.
- For facilities without underdrains, the bioretention soil depth shall be a minimum of 12 inches for flow control and 18 inches for water quality treatment. For facilities with underdrains, the amended soil shall have a minimum depth of 18 inches.
- The average ponding depth for the cell shall be no less than the selected ponding depth.

The *bottom area* for the cell is calculated as a function of the hard surface area routed to it. As an example, to meet the Pre-developed Pasture Standard, the bottom area of the bioretention cell with slopes sides and without an underdrain would be equal to 6.0 percent of the hard surface area routed to it when the ponding depth is 6 inches and the subgrade infiltration rate is equal to or greater than 1.0 inch per hour.

For facilities with sloped sides, the top area is calculated as a function of the cell bottom area and the side slopes up to the total facility depth (i.e., ponding and freeboard depth).

Alternatively, infiltrating bioretention facilities can be sized using a continuous simulation hydrologic model as described in the subsequent section.

## Modeling Approach for On-site Performance Standard, Flow Control, and Water Quality Treatment

When using continuous simulation hydrologic modeling to size bioretention cells, the assumptions listed in Table 5.21 shall be applied. Infiltrating bioretention can be modeled as

a layer of soil (with specified design infiltration rate and porosity) with ponding, infiltration to underlying soil and overflow. The contributing area, cell bottom area, and ponding depth should be iteratively sized until the Minimum Requirements for On-site Stormwater Management, Flow Control and/or Treatment are met (refer to *Volume 1 – Project Minimum Requirements* ). General sizing procedures for infiltration facilities are presented in *Section 4.5.1*.

**Table 5.21. Continuous Modeling Assumptions for Infiltrating Bioretention.**

| Variable | Assumption |
|---|---|
| Precipitation Series | Seattle 158-year, 5-minute series. |
| Computational Time Step | 5 minutes. |
| Inflows to Facility | Surface flow and interflow from total drainage area (including impervious and pervious contributing areas) routed to facility. |
| Precipitation and Evaporation Applied to Facility | Yes. If model does not apply precipitation and evaporation to facility automatically, then modelers shall add the facility area to the post developed impervious contributing area to account for this additional precipitation and evaporation (note that this will underestimate the evaporation of ponded water). |
| Bioretention Soil Infiltration Rate | The design infiltration rate shall be 6 inches per hour. |
| Bioretention Soil Porosity | A 30 percent porosity shall be assumed for facility sizing. |
| Bioretention Soil Depth | For facilities without underdrains, the soil shall have a minimum of 12 inches for flow control and minimum of 18 inches for water quality treatment. For facilities with underdrains, the soil shall have a minimum depth of 18 inches. |
| Subgrade Soil Design Infiltration Rate | Design infiltration rate (*Section 4.5.2*, *Appendix D*) |
| Liner | The horizontal footprint of a liner shall be excluded from the infiltration area (bottom area and/or side slopes). |
| Underdrain (if required) | If the underdrain is elevated above the bottom extent of the aggregate layer, water stored in the aggregate below the underdrain invert may be modeled to provide storage and infiltrate to subsurface soil.<br>For the purposes of this manual, underdrains meeting the bedding requirements shown in Figures 5.12 and 5.13 are considered “elevated” by 6 inches. In order to model the underdrain with underlying storage and infiltration, the aggregate gravel reservoir shall extend across the bottom of the facility. The underdrain pipe could be further elevated for improved flow control performance. |
| Overflow Structure | The overflow elevation shall be set at the maximum ponding elevation (excluding freeboard). It may be modeled as weir flow over a riser edge. Note that the total facility depth (including freeboard) shall be sufficient to allow water surface elevation to rise above the overflow elevation to provide head for discharge. |

### *5.4.4.7. Minimum Construction Requirements*

During construction, it is critical to prevent clogging and over-compaction of the subgrade and bioretention soils. Minimum requirements associated with bioretention facility construction include the following:

- Place bioretention soil per the requirements of City of Seattle Standard Specifications.
- Do not excavate or place soil during wet or saturated conditions.

Refer to the Puget Sound LID Manual for additional guidance on bioretention construction.

#### *5.4.4.8. Operations and Maintenance Requirements*

Bioretention O&M requirements are provided in *Appendix G (BMP No. 22)*.

## 5.4.5. Rain Gardens

### 5.4.5.1. Description

Rain gardens are shallow, landscaped depressions with compost amended soil or imported bioretention soil and plants adapted to the local climate and soil moisture conditions. Stormwater is stored as surface ponding before it filters through the underlying amended soil. Stormwater that exceeds the surface storage capacity overflows to an adjacent drainage system. Treated water is infiltrated into the underlying soil. Rain gardens call be individual cells or multiple cells connected in series.

Rain gardens are infiltration BMPs and shall be designed according to the requirements in *Section 3.2* and *Section 4.5.*

Rain gardens are similar to infiltrating bioretention facilities (refer to *Section 5.4.4*) with the following exceptions:

- Rain gardens may only be used to meet the On-site List Approach.
- Rain gardens cannot be used on projects choosing to meet the On-site Performance Standard or projects that trigger flow control or water quality treatment requirements.
- Rain gardens may not have a liner or underdrain.
- The maximum ponding depth is 6 inches.
- Rain gardens may have compost amended soil rather than imported bioretention soil.
- There are no presettling requirements.
- In no case shall the area contributing runoff to a rain garden consist of more than 10 percent PGHS within the right-of-way.
- Observation ports are not required.

### 5.4.5.2. Performance Mechanisms

Like infiltrating bioretention, rain gardens provide flow control via detention, attenuation, and losses due to infiltration, interception, evaporation, and transpiration. Some water quality treatment is provided through sedimentation, filtration, adsorption, uptake, or biodegradation and transformation of pollutants by soil organisms, soil media, and plants (note that rain gardens cannot be used to achieve water quality treatment).

### 5.4.5.3. Applicability

As shown in the table below, rain gardens can only be applied to meet the on-site stormwater management requirement using the On-site List Approach. To meet flow control, water quality treatment or the On-site Performance Standards, an infiltrating bioretention facility may be used (refer to *Section 5.4.4*).

| BMP | On-site | | Flow Control | | | Water Quality | | | | Conveyance |
|---|---|---|---|---|---|---|---|---|---|---|
| | List | Standard | Forest | Pasture | Peak | Basic | Enhanced | Oil Control | Phosphorus | |
| Rain garden | ✓ | | | | | | | | | ✓[a] |

[a] Rain gardens may be connected in series, with the overflows from upstream cells directed to downstream cells to provide conveyance.

### 5.4.5.4. Site Considerations

Site considerations for the applicability of rain gardens are provided in *Section 3.2* and *Section 4.5*. Refer to *Appendix C* for additional infeasibility criteria for the On-site List Approach.

### 5.4.5.5. Design Criteria

This section provides a description, recommendations, and requirements for the components of rain gardens. Typical components of a rain garden are shown in Figure 5.14. Design criteria are provided in this section for the following elements:

- Contributing area
- Flow entrance
- Ponding area
- Compost amended or imported bioretention soil
- Subgrade
- Overflow
- Plants
- Mulch layer

For additional guidance on rain garden design and construction, refer to the *Rain Garden Handbook for Western Washington Homeowners* (WSU 2013, or as revised). Sizing guidance provided in the handbook is not applicable (refer to *Section 5.4.5.6* for sizing requirements).

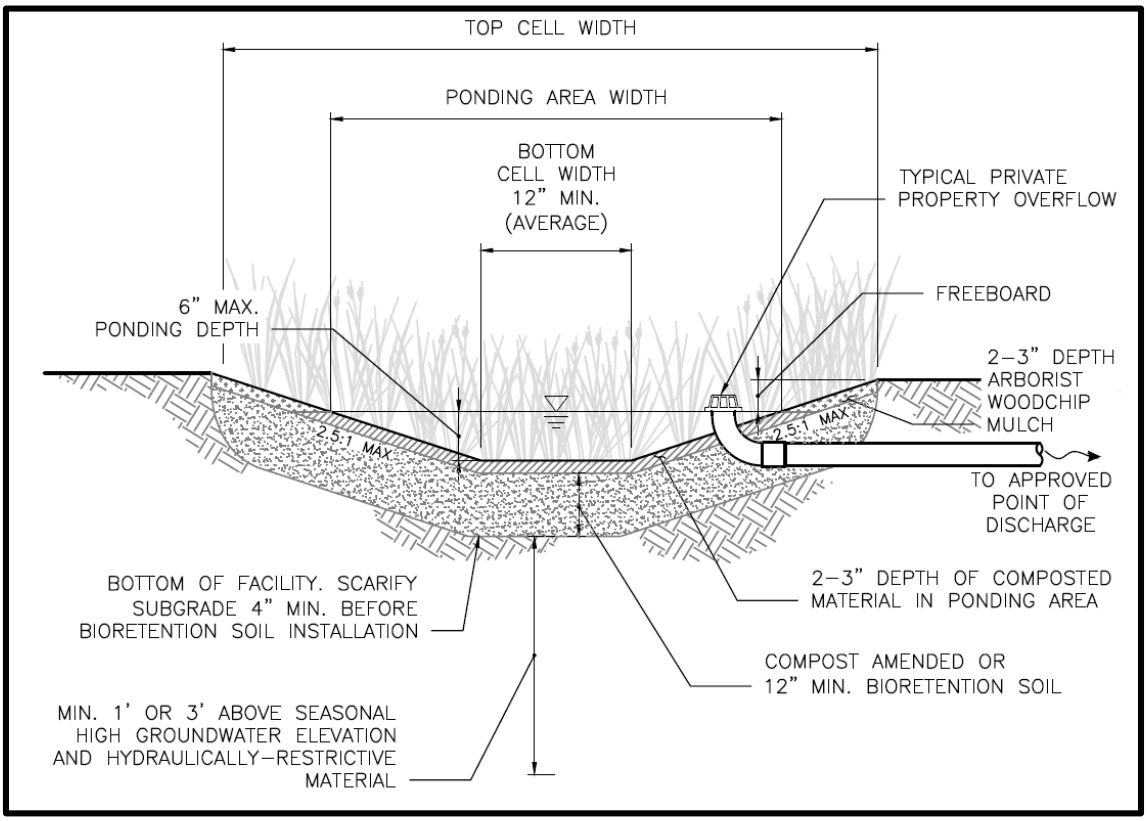


**Figure 5.14. Typical Rain Garden.**

## Contributing Area

A single rain garden cell or a series of cells shall not receive runoff from more than 5,000 square feet of impervious area. This area limitation is to ensure that rain gardens are small-scale and distributed. In no case shall the area contributing runoff to a rain garden consist of more than 10 percent PGHS within the right-of-way.

The rain garden cell area should be sized for the contributing area routed to the cell. It is recommended that cells not be oversized because the vegetation in oversized cells may not receive sufficient storm water runoff for irrigation, increasing maintenance requirements.

Stormwater flows from other areas (beyond the area for which the rain garden is sized) should be bypassed around the cell in order to reduce sediment loading to the cell and the potential for clogging. While it is preferred that rain gardens be sized to manage only the area draining to the cell, excess flows may be routed through a rain garden with the following limitations:

- The maximum impervious drainage area that may be routed to a rain garden shall not exceed twice the area for which it is sized, limited to a maximum of 5,000 square feet. Additional runoff contributions from pervious areas are acceptable. No on-site stormwater management credit is given for runoff from areas beyond the design area.
- Additional runoff routed to a rain garden shall be clearly noted on submitted plans.

## Flow Entrance

Flow entrances must be sized to capture flow from the drainage area and designed to both reduce the potential for clogging at the inlet and prevent inflow from causing erosion in the rain garden cell. Four primary types of flow entrances can be used for rain gardens:

- Dispersed flow (e.g., vegetated buffer strips)
- Sheet flow
- Curb cuts
- Concentrated flow (e.g., piped flow)

Vegetated buffer strips are the preferred entrance type because they slow incoming flows and provide initial settling of particulates. Refer to the Puget Sound LID Manual for guidance on flow entrances.

The minimum requirements associated with the flow entrance design include the following:

- For rain gardens in the right-of-way, the flow entrance elevation shall be above the overflow elevation.
- For sheet flow into a rain garden, a minimum 1-inch drop from the edge of a contributing hard surface to the vegetated flow entrance is required. This drop is intended to allow for less frequent maintenance by allowing some sediment/debris buildup at the edge where flow enters the rain garden.
- The following requirements apply to parking lot curb cut flow entrances:
    - The minimum curb cut width shall be 8 inches.
    - The curb cut must have either a minimum of 5 percent slope from the outer curb face extending to a minimum of 12 inches beyond the back of curb, or provide a minimum of 2-inch vertical drop from the back of curb to the vegetated surface of the cell.
- If concentrated flows are entering the cell (e.g., pipe or curb cut), flow energy dissipation (e.g., rock/cobble pad or flow dispersion weir) shall be incorporated to reduce the potential for erosion at the inlet.

## Ponding Area

The ponding area provides surface storage for storm flows and the first stages of pollutant treatment within the cell. The minimum requirements associated with the cell ponding area design include the following:

- The bottom area of a cell shall be no less than 4 square feet.
- The average ponding depth shall be no less than 2 inches and no more than 6 inches.
- The maximum planted side slope is 2.5H:1V. If total cell depth exceeds 3 feet, the maximum planted side slope is 3H:1V. If steeper sides are necessary, rockery, concrete walls, or steeper soil wraps may be used.

- If berming is used to achieve the minimum top cell elevation needed to meet ponding depth and freeboard needs, maximum berm slope is 2.5H:1V, and minimum berm top width of is 6 inches. Soil used for berming where the permanent restoration is landscape shall be imported bioretention soil or amended subgrade soil and compacted to a minimum of 90 percent dry density.
- For trees planted within or alongside slopes of a rain garden cell, the maximum side slope around the tree is 1H:1V.
- The average bottom width for the rain garden shall be no less than 12 inches.
- The bottom slope shall be no more than 3 percent.

To address traffic and pedestrian safety concerns, the following additional minimum requirements apply to rain gardens in the right-of-way:

- The following minimum setbacks shall be provided:
  - 2 feet minimum from face of curb to top of slope on non-major arterial streets
  - 4 feet minimum from face of curb to top of slope for major arterial street
  - 1 foot minimum from edge of sidewalk to top of slope
- A minimum of one access path across planting strip shall be provided between the street and public sidewalk for each parcel. Access paths shall be a minimum of 5 feet wide. It is preferred that the access path is within 15 feet of the structure access point (such as path to doorway or stairs).
- Rain gardens shall not impact driveway/alley access. A 2-foot minimum setback shall be provided from the pavement edge of the driveway curb cut wing to the top (top of slope) of rain garden.
- A two-foot minimum setback shall be provided from the edge of paving for the public sidewalk/curb ramp at the intersection to the top of slope of the rain garden. Curb ramp improvements are required whenever the construction of rain gardens and associated street improvements remove pavement within the crosswalk area of the street or sidewalk, impact curbs, sidewalks, curb ramps, curb returns or landings within the intersection area, or affect access to or use of a public facility.

### Compost Amended or Imported Bioretention Soil

Proper soil specification, preparation, installation, and maintenance are critical factors for rain garden performance. To meet rain garden soil requirements, the subgrade soil may be amended with compost or the subgrade soil may be over excavated and replaced with imported bioretention soil.

To determine if the subgrade soil is suitable for amending with compost, a simple soil texture test can be performed. When digging the test hole for the subgrade soil infiltration test do the following:

- Squeeze moist soil into a ball. If the soil falls apart or can be broken up easily and is gritty feeling, this suggests a sandier, well-draining soil. This type of soil is suitable for amending and use in the rain garden.

- If the soil is sticky, smooth, and forms a ball that can be worked like modeling clay, this suggests poor-draining soil with high clay content. If the soil is smooth, pliable but not sticky then it is likely a silty soil and moderate to poor draining. These soils are less suitable for amending and shall be replaced with 12 inches of imported bioretention soil per City of Seattle Standard Specification 7-21 (refer to *Section 5.4.4.5*).
- If the soil is dry, add water a few drops at a time, break down the chunks to work the water into soil, and then perform the soil texture test.

If the subgrade soil is suitable, amend existing site topsoil or subsoil per *Section 5.1.5.1.*

### Subgrade

The minimum measured subgrade infiltration rate for rain gardens is 0.3 inches per hour.

If subgrade soil is over excavated to place imported bioretention soil, the subgrade soil surface can become smeared and sealed by excavation equipment during construction. The design shall require scarification or raking of the side walls and bottom of the rain garden excavation to a minimum depth of 4 inches after excavation to restore infiltration rate.

### Overflow

A rain garden shall have an overflow. The rain garden overflow can be provided by a drain pipe, earthen channel or curb cut installed at the designed maximum ponding elevation and connected to a downstream BMP or an approved point of discharge.

The minimum requirements associated with the overflow design include the following:

- Overflows shall convey any flow exceeding the capacity of the cell per *Section 4.3.4*.
- Freeboard shall be provided to ensure that overflows are safely conveyed to an approved point of discharge without flooding adjacent properties or sidewalks. The minimum freeboard measured from the invert of the overflow point (e.g., standpipe, earthen channel, curb cut) to the lowest overtopping elevation of the cell is 2 inches for contributing drainage areas less than 1,000 square feet and 4 inches for contributing drainage areas 1,000 square feet or greater.
- The drain pipe, if used, shall have a minimum diameter of 4 inches.
- For cells in the right-of-way with ponding depths of 3 inches or less (e.g., Sidewalk Projects), it is acceptable to allow overflow over the curb to the roadway conveyance system.
- If the cell will receive flows from areas beyond the area for which the rain garden is sized (refer to the *Contributing Area* subsection), the overflow conveyance infrastructure shall safely convey runoff from the total drainage area.

### Plants

In general, the predominant plantings used in rain gardens are species adapted to stresses associated with wet and dry conditions. Soil moisture conditions will vary within the rain garden from saturated (bottom of cell) to relatively dry (rim of cell). Accordingly, wetland

plants may be planted in the lower areas and drought-tolerant species planted on the perimeter of the rain garden or on mounded areas.

The minimum requirements associated with the vegetation design include the following:

- The plans shall specify that vegetation coverage of plants will achieve 90 percent coverage within 2 years. For this purpose, cover is defined as canopy cover and should be measured when deciduous plants are in bloom.
- The plants must be sited according to sun, soil, wind and moisture requirements.
- At a minimum, provisions shall be made for supplemental irrigation/watering during the first two growing seasons following installation and in subsequent periods of drought.
- Plants for rain gardens sited in the right-of-way shall be selected from bioretention plant list (*Appendix E*).

Refer to the Rain Garden Handbook for Western Washington Homeowners and the Puget Sound LID Manual for guidance on plant selection and recommendations for increasing survival rates.

### Mulch Layer

Properly selected organic mulch material reduces weed establishment, regulates soil temperatures and moisture, and adds organic matter to the soil. Compost and arborist wood chip mulch are required for different applications within the rain garden cell. Compost mulch is an excellent slow-release source of plant nutrients and does not float, but compost does not suppress weed growth as well as bulkier, higher carbon mulches like arborist wood chips. Arborist wood chips are superior to bark mulch in promoting plant growth, feeding beneficial soil organisms, reducing plant water stress, and maintaining surface soil porosity.

Organic mulch shall consist of the following:

- Compost (per City of Seattle Standard Specification 9-14.4(8)6b) in the bottom of the rain garden cell and up to the ponding elevation
- Arborist wood chip mulch (per City of Seattle Standard Specification 9-14.4(4)) on cell slopes above the ponding elevation and the around the rim area
- A minimum of 2 inches and a maximum of 3 inches for both types of organic mulch

In rain garden areas where higher flow velocities are anticipated, an aggregate mulch may be used to dissipate flow energy and protect underlying soil. Aggregate mulch varies in size and type, but 1- to 1-1/2-inch gravel (rounded) decorative rock is typical. Aggregate mulch shall be washed (free of fines) and the area covered with aggregate mulch shall not exceed one fourth of the rain garden bottom area.

As an alternative to mulch, a dense groundcover may be used. Mulch is required in conjunction with the groundcover until groundcover is established. Mulch is not required for turf-vegetated cells.

### *5.4.5.6. BMP Sizing*

#### Sizing for On-site List Approach

Rain gardens may be selected to meet the On-site List Requirement (refer to *Section 3.3.1* and *Appendix C* for infeasibility criteria). To meet the requirement rain gardens shall be sized according to the sizing factors provided in Table 5.22. Sizing factors are based on achieving a minimum wetted surface area of 5 percent of the contributing area or meeting the On-site Performance Standard for a pre-developed condition of forest on till (whichever is greater).

Factors are organized by cell ponding depth, cell side slope, and subgrade design infiltration rate. To select the appropriate sizing factor:

- The subgrade design infiltration rate shall be rounded down to the nearest rate in the sizing table, or sizing factors may be linearly interpolated for intermediate infiltration rates (e.g., between 0.15 and 0.3 inches per hour).
- The ponding depth shall be rounded down to the nearest depth in the sizing table, or sizing factors may be linearly interpolated for intermediate ponding depths (e.g., between 3 and 4 inches ponding).

The rain garden shall meet the general requirements for rain gardens outlined in this section plus the following specific requirements:

- The bottom area shall be sized using the applicable sizing factor.
- It is preferred that the bottom area be flat, but up to 3 percent slope is permitted.
- For facilities with sloped sides, the side slopes within the ponded area shall be no steeper than 2.5H:1V.
- The rain garden soil depth shall be a minimum of 12 inches.
- The average ponding depth for the cell shall be no less than the selected ponding depth.

Hard Surface Area Managed = Rain Garden Bottom Area ÷ Factor (%)/100. The *bottom* area for the rain garden is calculated as a function of the hard surface area routed to it. As an example, the bottom area of the rain garden would be equal to 3.5 percent of the hard surface area routed to it when the design infiltrating rate is 0.6 inches per hour and the ponding depth is 6 inches. For facilities with sloped sides, top area is calculated as a function of the cell bottom area and the side slopes up to the total rain garden depth (i.e., ponding and freeboard depth).

**Table 5.22. On-site List Sizing for Rain Gardens.**

| Bioretention Configuration | Ponding Depth | Subgrade Soil Design Infiltration Rate | Sizing Factor for Rain Garden Bottom Area |
|---|---|---|---|
| | | | On-site List |
| Sloped sides | 2 inches | 0.3 inch/hour | 4.7%[a] |
| | | 0.6 inch/hour | 4.5% |
| | | 1.0 inch/hour | 4.5% |
| | | 2.5 inch/hour | 4.5% |
| | 6 inches | 0.3 inch/hour | 3.5% |
| | | 0.6 inch/hour | 3.5% |
| | | 1.0 inch/hour | 3.5% |
| | | 2.5 inch/hour | 3.5% |
| Vertical sides | 6 inches | 0.3 inch/hour | 5.3%[a] |
| | | 0.6 inch/hour | 5.0% |
| | | 1.0 inch/hour | 5.0% |
| | | 2.5 inch/hour | 5.0% |

NA – not applicable

[a] Sizing factor increased beyond the minimum wetted surface area of 5 percent to meet the On-site Performance Standard for a pre-developed condition of forest on till.

Rain Garden Bottom Area = Contributing Hard Surface Area x Factor (%)/100.

### 5.4.5.7. Minimum Construction Requirements

During construction, it is critical to prevent clogging and over-compaction of the subgrade, bioretention soils or amended soils. Minimum requirements associated with rain garden construction include the following:

- Amend subgrade soil per *Section 5.1* or place bioretention soil per the requirements of City of Seattle Standard Specifications.
- Do not excavate, place soil, or amend soil during wet or saturated conditions.

### 5.4.5.8. Operations and Maintenance Requirements

Rain garden O&M requirements are provided in *Appendix G (BMP No. 28)*.

## 5.4.6. Permeable Pavement Facilities

### 5.4.6.1. Description

Permeable pavement is a paving system which allows rainfall to percolate into an underlying aggregate storage reservoir, where stormwater is stored and infiltrated to the underlying subgrade or removed by an overflow drainage system. Two categories of permeable pavement BMPs are included in this manual: permeable pavement facilities (provided in this section) and permeable pavement surfaces (provided in *Section 5.6.2*). A comparison of these BMPs is provided in Table 5.23.

**Table 5.23. Comparison of Permeable Pavement Facilities and Surfaces.**

| Characteristic | | Permeable Pavement Facility | Permeable Pavement Surface |
|---|---|---|---|
| Infiltration Facility | Subject to restrictions for infiltration facilities (e.g., setbacks, separation from groundwater) | Yes | No |
| Performance | Can typically be designed to meet all performance standards for the permeable pavement area | Yes | Low-slope installations only (up to 2 percent) |
| Run-on | Can be designed to manage (meet stormwater requirements) for stormwater runoff from other contributing areas (run-on) | Yes | No |
| Subsurface Check Dams | Installation on sloped subgrade requires subsurface check dams to achieve the design storage depth across the facility | Yes | High slope installations only (exceeding 5 percent) |
| Aggregate Depth | Required minimum aggregate depth | 6 inches storage reservoir | 3 inches aggregate subbase |

A permeable pavement facility consists of a pervious wearing course (e.g., porous asphalt, pervious concrete) and an underlying storage reservoir. The storage reservoir is designed to support expected loads and store stormwater to allow time for the water to infiltrate into the underlying soil.

While not explicitly addressed in this section, infiltration galleries may be allowed under impermeable pavements in lieu of permeable pavement.

### 5.4.6.2. Performance Mechanisms

Flow control occurs through temporary storage of stormwater runoff in the voids of the aggregate material and subsequent infiltration of stormwater into the underlying soils. Pollutant removal mechanisms include sedimentation, infiltration, filtration, adsorption, and biodegradation.

### 5.4.6.3. Applicability

Permeable pavement facilities can be designed to provide on-site stormwater management, flow control and/or water quality treatment. This BMP can be applied to meet or partially meet the requirements listed below.

| BMP | On-site | | Flow Control | | | Water Quality | | | | Conveyance |
|---|---|---|---|---|---|---|---|---|---|---|
| | List | Standard | Forest | Pasture | Peak | Basic | Enhanced | Oil Control | Phosphorus | |
| Permeable Pavement Facility | ✓ | ✓ | ✓ | ✓ | ✓ | ✓[a] | ✓[a] | | ✓[b] | |

[a] Underlying soil shall meet the treatment soil requirements outlined in *Section 4.5.2* or a water quality treatment course shall be included per *Section 5.4.6.5*.

[b] Refer to treatment train options for infiltration BMPs included in *Section 4.4.3.2*.

### *5.4.6.4. Site Considerations*

Unlike many facilities that require dedicated space on a site, permeable pavement facilities are part of the usable lot area and can replace conventional pavements, including:

- Sidewalks and pedestrian plazas
- Pedestrian and bike trails
- Driveways
- Most parking lots
- Low volume roads, alleys, and access drives

Site considerations for the applicability of permeable pavement facilities include:

- **Setbacks and restrictions**: Permeable pavement facilities shall meet the siting and infiltration rate requirements for infiltration facilities presented in *Section 3.2 and Section 4.5*. For areas where infiltration facilities are not permitted, permeable pavement surfaces may be used because they are not categorized as infiltration facilities (refer to *Section 5.6.2*).
- **Site topography:** The recommended maximum surface (wearing course) slope for permeable pavement facilities is 6 percent to allow efficient storage of water within the subbase. For vehicular traction, the maximum surface slope varies by wearing course type (refer to industry guidelines).

  The recommended maximum subgrade slope for permeable pavement applications is 6 percent. Subgrades that are sloped require subsurface check dams to promote storage in the subgrade (refer to *Section 5.4.6.5 – Subsurface Check Dam* and Figure 5.16). At steeper subgrades slopes, design and construction become more complex and the construction cost increases.

- **Land use**: Because permeable pavement can clog with sediment, permeable paving facilities are not recommended where sediment and pollutant loading is unavoidable, including the following conditions:
  - Excessive sediment contamination is likely on the pavement surface (e.g., construction areas, landscaping material yards).

  - It is infeasible to prevent stormwater run-on to the permeable pavement from unstabilized erodible areas without presettling.
  - Regular, heavy application of sand is anticipated for maintaining traction during winter, or the facility is in close proximity to areas that will be sanded. A minimum 7-foot clearance is required between a permeable pavement facility and the travel lane of sanded arterial roads.
  - Sites where the risk of concentrated pollutant spills are more likely (e.g., gas stations, truck stops, car washes, vehicle maintenance areas, industrial chemical storage sites).
- **Accessibility**: As for standard pavement design, ADA accessibility issues shall be addressed when designing a permeable pavement facility, particularly when using pavers.
- Refer to *Appendix C* for additional infeasibility criteria for the On-site List Approach.

#### *5.4.6.5. Design Criteria*

This section provides descriptions, recommendations, and requirements for the common components of permeable pavement facilities. Typical components of a permeable pavement facility are shown in Figure 5.15 and a permeable pavement facility with check dams is shown in Figure 5.16. Some, or all, of the components may be used for a given application depending on the permeable pavement type (e.g., porous asphalt, pavers, etc.), site characteristics and restrictions, and design objectives.

Design criteria are provided in this section for the following elements:

- Contributing area
- Flow Entrance/presettling
- Wearing course
- Leveling course
- Storage reservoir
- Subgrade
- Subsurface check dams
- Overflow
- Geotextile
- Water quality treatment course (if required)
- Observation port
- Underdrain (optional)

The structural design of permeable pavement to support anticipated loads is outside the scope of this manual.

The Puget Sound LID Manual provides additional guidance on permeable pavement design.

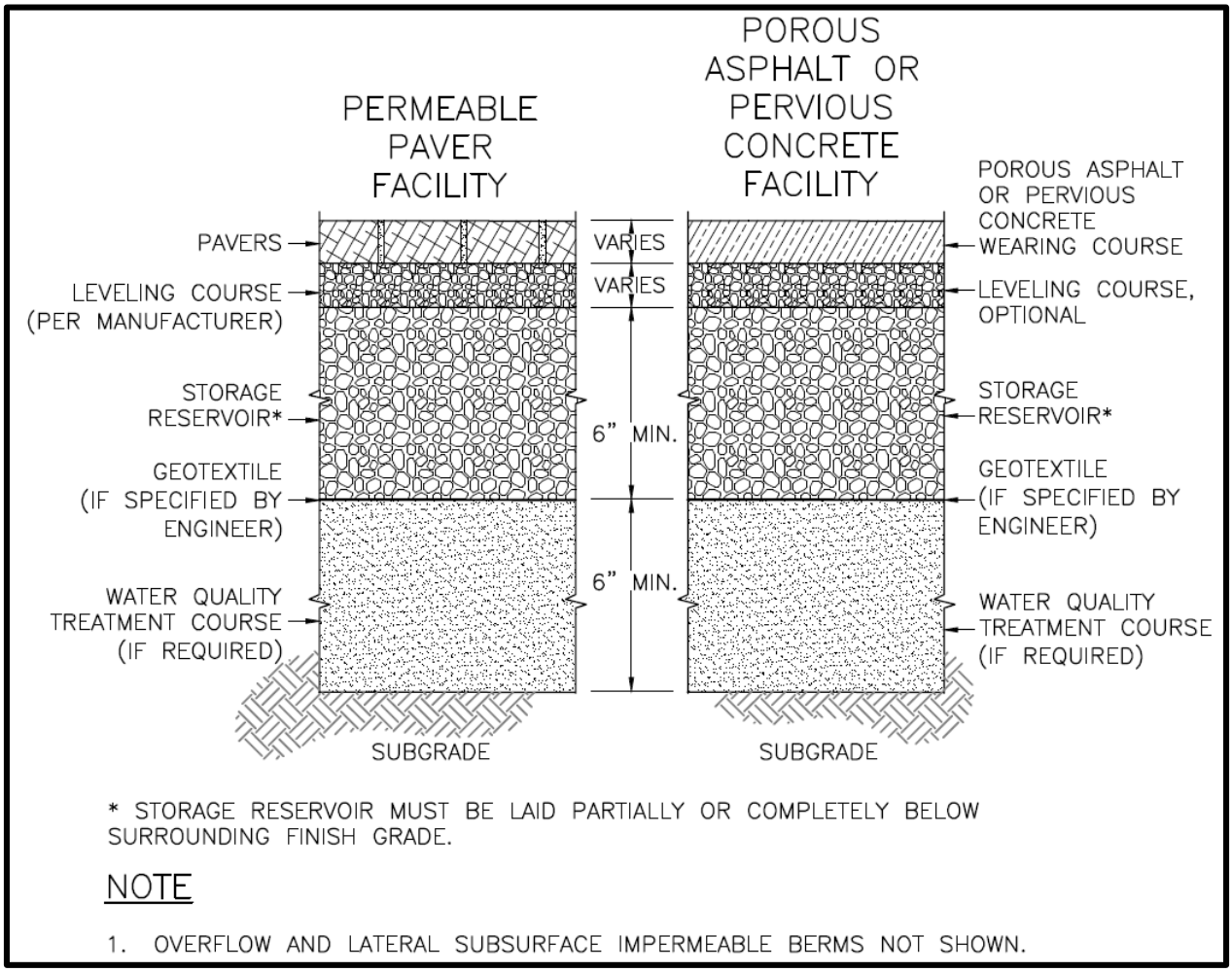


**Figure 5.15. Permeable Pavement Facility.**

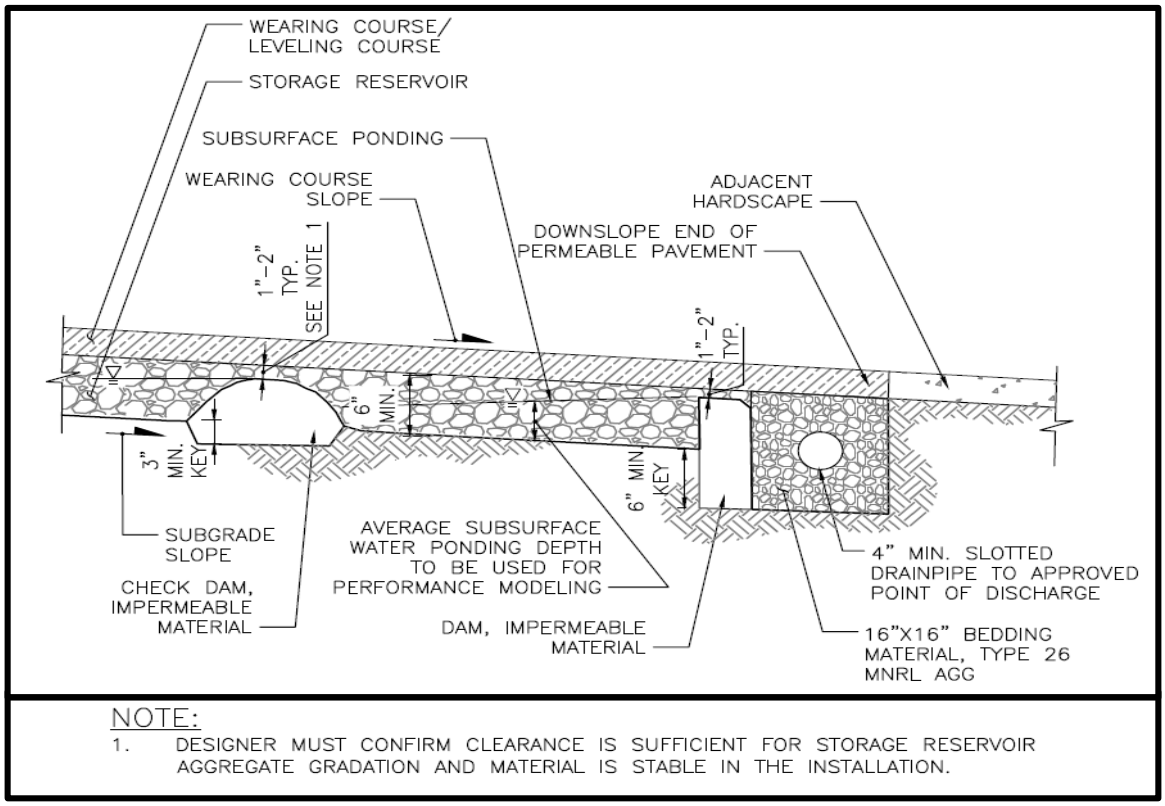


NOTE:
1. DESIGNER MUST CONFIRM CLEARANCE IS SUFFICIENT FOR STORAGE RESERVOIR AGGREGATE GRADATION AND MATERIAL IS STABLE IN THE INSTALLATION.

**Figure 5.16. Typical Permeable Pavement Facility with Checkdams.**

## Contributing Area

Permeable pavement facilities may be designed to manage (meet stormwater requirements for) runoff from other contributing areas (run-on). When designed to receive run-on, permeable pavement areas shall be protected from sedimentation which can cause clogging and diminished facility performance. The minimum requirements associated with the contributing area include the following:

- The contributing area shall be no larger than specified by surface type below:
  - Pollution-generating impervious surfaces (e.g., roadways, parking lots): maximum run-on ratio of 2:1
  - Non-pollution generating hard surfaces (e.g., roofs, sidewalks) and stabilized pervious surfaces: maximum run-on ratio of 5:1
  - For a mix of surface areas, the maximum run-on ratio shall be area-weighted (e.g., a contributing area comprised of half parking lot and half roof would be subject to a maximum run-on ratio of 3.5:1).
- To prevent sediment flowing onto the pavement, run-on shall not occur from erodible/unstabilized areas or from impervious areas that receive run-on from unstabilized areas.
- Run-on shall not occur from contributing areas from which sediment or pollutant loads are unavoidable. Refer to land use restrictions listed in the *Site Considerations* subsection.

## Flow Entrance/Presettling

Run-on should be directed to the permeable pavement facility in a distributed manner (e.g., sheet flow) rather than through concentrated flow, where possible. Specific requirements associated with the run-on flow entrance area provided below.

- If the run-on flow is concentrated and the contributing area exceeds 1,000 square feet, run-on shall be dispersed to permeable pavement. Acceptable methods include sheet flow (e.g., dispersion trench) or subsurface delivery to the storage reservoir. If subsurface delivery is used, stormwater inflows shall be routed through a catch basin or yard drain with downturned elbow (trap). Presettling requirements are provided in *Section 4.4.5*. After presettling, flows shall be distributed to the storage reservoir (e.g., via slotted drain pipe).
- If the run-on flow is concentrated and the contributing area is 1,000 square feet or less, concentrated run-on is permitted. However, the designer shall consider the concentrated flow velocity, permeable pavement slope and permeable pavement flow path to ensure that the run-on will be captured by the pavement.
- Where run-on flows onto permeable pavement and flow is concentrated, these areas shall be identified in the O&M plan as requiring more frequent cleaning and inspection to ensure overall facility performance.
- If run-on flow from an impervious surface is dispersed (e.g., via sheet flow), the flow path length on the contributing impervious surface shall not be more than 5 times the flow path length on the permeable pavement. The minimum flow path length on the permeable pavement shall be 4 feet.

## Wearing Course

The surface layer of a permeable pavement facility is the wearing course. Categories of wearing courses include:

- **Porous Asphalt**: Porous asphalt concrete is open-graded asphalt with reduced fines and air pockets encased within it that allow water to drain to the base below. Similar to conventional asphalt, porous asphalt is laid with traditional asphalt paving equipment. Simple applications include a single wearing course.
- **Pervious Concrete***:* Pervious cement concrete is similar to porous asphalt in that the mixture omits or substantially reduces the fines to create stable air pockets encased within it. Pervious concrete typically has a rougher surface than impermeable concrete or porous asphalt.
- **Permeable Interlocking Concrete Pavers***:* Permeable interlocking concrete paver blocks are not typically permeable, but they are installed with gaps between them to allow stormwater to infiltrate into the subsurface. The gaps, typically 10 percent of the surface area, are filled with a permeable material, which is usually small clean stone.
- **Grid Systems***:* Open-celled paving grids consist of a rigid grid composed of concrete or a durable plastic that is filled with gravel or vegetation. The support base and the ring walls prevent soil compaction and reduce rutting and erosion by supporting the weight

of traffic and concentrated loads. Vegetated grid systems are filled with a mix of sand, gravel, and topsoil and planted with a variety of non-turf forming grasses or low-growing groundcovers. Gravel-filled grid systems are filled with a clean aggregate mix specified by the manufacturer.

Minimum requirements associated with the wearing course design include the following:

- A minimum wearing course surface slope of 1 percent is required (2 percent recommended) to ensure positive surface drainage should the surface become clogged.
- For sidewalks in the right-of-way, the wearing course surface slope shall be no more than 6 percent.
- For permeable pavement applications in the right-of-way, the permeable pavement area shall be no less than 250 square feet.
- For projects with less than 5,000 square feet of new plus replaced hard surface, infiltration capacity may be demonstrated using a bucket test wherein a bucket of water is thrown on the surface. If anything other than a scant amount of water puddles or runs off the surface, quantitative testing is required as described below.
- For projects with 5,000 square feet or more new plus replaced hard surface a minimum initial uncorrected infiltration rate of 100 inches per hour is required. To improve the probability of long-term performance, significantly higher measured infiltration rates are desirable.
    - For measuring initial surface infiltration rates for porous asphalt or pervious concrete, the Standard Test Method for Infiltration Rate of In Place Pervious Concrete (ASTM C1701) or the infiltration rate field test from the City of Seattle standard specification for pervious concrete shall be used.
    - For measuring initial surface infiltration rates for permeable interlocking concrete pavers, the Standard Test Method for Surface Infiltration Rate of Permeable Unit Pavement Systems (ASTM C1781) shall be used.
    - For grid systems, refer to manufacturers testing recommendations.
- Wearing course material for permeable interlocking pavers shall be on the approved technology list on the DPD website (www.seattle.gov/dpd/codesrules/codes/stormwater) or approved by the Director.
- For pervious concrete, City of Seattle Standard Specifications shall be used for projects in the right-of-way. For projects outside of the right-of-way, the City of Seattle Standard Specifications or an approved equivalent shall be used.
- For porous asphalt, refer to the Puget Sound LID Manual for additional guidance on wearing course design.

## Leveling Course

Depending upon the type of wearing course, a leveling course (also called a bedding or choker course) may be required. A leveling course is often required for grid systems, permeable interlocking concrete pavers, and pervious concrete. This course is a layer of aggregate that provides a more uniform surface for laying pavement or pavers and typically consists of

crushed aggregate smaller in size than the underlying storage reservoir. Course thickness will vary with permeable pavement type.

Leveling course material and thickness shall be included as required per manufacturer or designer recommendations. Leveling course material shall be compatible with underlying storage reservoir material (with low potential to migrate into underlying storage reservoir) and shall not limit the infiltration rate through the system.

### Storage Reservoir

Stormwater passes through the wearing and leveling courses to an underlying aggregate storage reservoir, also referred to as base material, where it is filtered and stored prior to infiltration into the underlying soil. This aggregate also serves as the pavement's support base and shall be sufficiently thick to support the expected loads. Design of the subgrade for loading is outside of the scope of this manual. A licensed engineer is needed to determine subsoil load bearing, minimum aggregate base thickness, and aggregate compaction for loading.

Minimum requirements associated with the storage reservoir design include the following:

- A 6-inch minimum depth of storage reservoir aggregate is required. Note that more depth may be needed for structural design support. A shallower depth may be approved around trees where necessary to protect roots.
- The storage reservoir shall be laid partially or completely below the elevation of the surrounding grade.
- The storage reservoir shall have a minimum total void volume of 25 percent after compacted in place. Percent voids (porosity) shall be determined in accordance with ASTM C29/C29M. Use the jigging procedure to densify the sample (do not use the shoveling procedure). These requirements are met if the aggregate materials recommended below are used.
- Aggregate material shall have 0-2 percent passing #200 wet sieve.
- For walkways, the following aggregate materials are recommended and meet the requirements listed above:
- City of Seattle Mineral Aggregate Type 24
- Modified AASHTO #57 per Washington State Department of Transportation Standard Specifications for Road, Bridge, and Municipal Construction, 2014 (WSDOT 2014) Section 9-03.1(4)C, with 0-2% passing #200 wet sieve; % fracture shall be in accordance with requirements per WSDOT 2014 9-03.9(2)
- For vehicular applications, the following aggregate materials are recommended and meet the requirements listed above:
- City of Seattle Mineral Aggregate Type 13
- Modified AASHTO #57 per WSDOT 2014 Section 9-03.1(4)C with 0-2 percent passing #200 wet sieve; percent fracture shall be in accordance with requirements per WSDOT 2014 9-03.9(2)
- Permeable ballast per WSDOT 2014 Section 9-03.9(2)

## Subgrade

The minimum measured subgrade infiltration rate for permeable pavement facilities without underdrains is 0.3 inches per hour. If permeable pavement facilities are to be used to meet the water quality treatment requirement, underlying soil shall meet the treatment soil requirements outlined in *Section 4.5.2* or a water quality treatment course shall be included.

During construction the subgrade soil surface can become smeared and sealed by excavation equipment. The design shall require scarification or raking of the side walls and bottom of the facility excavation to a minimum depth of 4 inches after excavation to restore infiltration rate.

## Subsurface Check Dam

Sloped facilities have an increased potential for lateral flows through the storage reservoir aggregate along the top of relatively impermeable subgrade soil. This poses a risk of subsurface erosion and reduces the storage and infiltration capacity of the pavement facility. If required depending upon slope, the subgrade shall be designed to create subsurface ponding to detain subsurface flow, increase infiltration, and reduce structural problems associated with subgrade erosion (refer to Figure 5.16). In such cases, ponding shall be provided using periodic lateral subsurface barriers (e.g., check dams) oriented perpendicular to the subgrade slope. While the frequency of the check dams is calculated based on the required subsurface ponding depth and the subgrade slope, typical designs include barriers every 6 to 12 inches of grade loss.

Subsurface check dams are required unless:

- The subgrade slope is less than 1 percent and the storage reservoir aggregate is laid below surrounding subgrade or
- A licensed professional makes a determination based on soil type and permeability that check dams are not required to address subgrade erosion or ensure performance of system.

Minimum requirements associated with check dams include the following:

- Check dams shall be impermeable and restrict lateral flow along the top of the subgrade soil.
- Check dams shall be installed at regular intervals perpendicular to the subgrade slope to provide the required average subsurface ponding depth in the storage reservoir.
- The check dams shall not extend to the elevation of the surrounding ground.
- Each check dam shall have an overflow, as described below, or allow overtopping to the next downslope storage reservoir section without causing water to flow out of the pavement surface or out the sides of the base materials that are above grade.

Note that the subgrade on sloped sites may be terraced to reduce the frequency of check dams. Even with terracing, a minimum of one downstream check dam is required to provide subsurface ponding.

## Overflow

Unless designed to provide full infiltration (*Section 4.5.1*), permeable pavement facilities shall have an overflow (*Section 4.3.4*). Minimum requirements associated with the overflow design include the following:

- Overflow shall be designed to convey any flow exceeding the capacity of the facility per *Section 4.3.4*. Options include:
  - Subsurface slotted drain pipe(s) set at the design ponding elevation to route flow to a conveyance system
  - Lateral flow through the storage reservoir to a daylighted conveyance system
- In the right-of-way, slotted pipe per City of Seattle Standard Plan No. 291 shall be used. On private property, perforated pipe shall meet Side Sewer Directors' Rule requirements.
- For facilities installed on a sloped subgrade, at least one overflow shall be sited at the downslope extent of the facility.
- If a slotted overflow pipe is used to collect water in the pavement section, the pipe diameter and spacing shall be designed based on the hydraulic capacity required. A non-perforated cleanout (sized to match underdrain diameter) shall be connected to the underdrain every 100 feet at a minimum. Projects in the right-of-way shall use City of Seattle Standard Plan No. 281. Projects on private properties shall use requirements in the Side Sewer Directors' Rule.
- A minimum wearing course surface slope of 1 percent is required (2 percent recommended) to ensure positive surface drainage should the surface become clogged.
- The designer shall consider the flow path of water when the permeable pavement section is fully saturated to the maximum design depth or when the wearing course is clogged to confirm there are no unanticipated discharge locations (e.g., impact to intersecting utility trenches, sheet flow to adjacent properties). The flow path shall be described on the plan submittal.
- If a permeable pavement facility is used in the public roadway section, the roadway conveyance system shall be designed as if the road surface were impermeable unless otherwise approved by the Director.

Note that the slotted pipe discussed in this section is set at the design ponding depth in the storage reservoir and is considered an overflow, not an underdrain. Underdrains are addressed in a separate subsection below.

## Geotextile

Generally, geotextiles and geogrids are used for the following purposes:

- As a filter layer to prevent clogging of infiltration surfaces
- To prevent fines from migrating to more open-graded material and causing associated structural instability

- To prevent downward movement of the aggregate base into the subgrade for soil types with poor structural stability

Geotextiles between the permeable pavement subgrade and aggregate base are not required or necessary for many soil types and, if incorrectly applied, can clog and reduce infiltration capability at the subgrade or other material interface. Therefore, the use of geotextiles is discouraged unless it is deemed necessary. As part of the pavement section design, the designer shall review the existing subgrade soil characteristics and treatment layer if any, and determine if geotextile is needed. Additional guidance on geotextile design is provided in *Appendix E*.

Minimum requirements associated with the geotextile design, if used, include the following:

- Use geotextile recommended by the manufacturer's specifications and by a geotechnical engineer for the given subgrade soil type or treatment layer and base aggregate.
- Extend the fabric up the sides of the excavation. This is especially important if the base is adjacent to conventional paving surfaces to prevent migration of fines from dense-graded base material and soil subgrade to the open graded base. Geotextile is not required on the sides if concrete curbs extend the full depth of the base/sub-base.
- Overlap adjacent strips of fabric at least 24 inches.
- Use geotextile that passes water at a greater rate than the design infiltration rate for the existing subgrade soils.

### Water Quality Treatment Course (If Required)

If the permeable pavement is being designed to provide water quality treatment or if the permeable pavement will be PGHS exceeding 2,000 square feet, underlying soils shall meet the requirements for treatment soil provided in *Section 4.5.2*. If the existing subgrade does not meet these requirements, a 6-inch water quality treatment course shall be included between the subbase and the storage reservoir. The course shall be comprised of a media meeting the treatment soil criteria (*Section 4.5.2*) or the sand media material specification for sand filters in *Section 5.8.5*.

### Observation Port

If a permeable pavement facility is designed to meet flow control and/or water quality treatment requirements and the permeable pavement area plus the run-on area (if any) is 5,000 square feet or greater, it shall be equipped with an observation port to allow for monitoring of the drawdown time following a storm. The observation port shall consist of a 4-inch minimum diameter perforated or slotted pipe with a secure well cap that extends to the bottom of the pavement section and keyed into the subbase. The port shall be located at the downslope area of the pavement system. Additional ports are required for every additional 5,000 square feet of permeable pavement area plus run-on area.

### Underdrain (Optional)

Underdrain systems shall be installed if the subgrade soils have a measured infiltration rate of less than 0.3 inches per hour. Designs utilizing underdrains provide less infiltration and flow control benefits. To improve performance, the underdrain may be elevated to maximize infiltration and/or outlet controls (e.g., orifice control) may be used to attenuate underdrain flows prior to release.

The underdrain pipe diameter will depend on hydraulic capacity required. The minimum requirements associated with the underdrain design include:

- In the right-of-way, slotted pipe per City of Seattle Standard Plan No. 291 shall be used. On private property, perforated pipe shall meet Side Sewer Directors' Rule requirements.
- Underdrain pipe slope shall be no less than 0.5 percent.
- Aggregate around pipe shall be graded to filter sediment and prevent clogging.
- A non-perforated cleanout (sized to match underdrain diameter) shall be connected to the underdrain every 100 feet minimum. Projects in the right-of-way shall use City of Seattle Standard Plan No. 281. Projects on private properties shall use requirements in the Side Sewer Directors' Rule.

Note that the slotted pipe discussed in this section is set below the design ponding depth in the storage reservoir and is considered an underdrain, not an overflow. Overflows are addressed in a separate subsection above.

## *5.4.6.6. BMP Sizing*

### Sizing for On-site List Approach

Permeable pavement facilities without underdrains may be selected to meet the On-site List Requirement (refer to *Section 3.3.1* and *Appendix C* for infeasibility criteria). The area of the permeable pavement facility meets the requirement. In addition, hard surface area contributing run-on to a permeable pavement facility also meets the requirement if it does not exceed the areas allowed by the sizing factors in Table 5.24.

The minimum required permeable pavement facility area is calculated as a function of the hard surface area routed to it. As an example, the minimum permeable pavement area would be equal to X percent of the hard surface area routed to it when the average water depth in the storage reservoir is 6 inches and the subgrade infiltration rate is between 0.3 and 0.6 inches per hour.

**Table 5.24. On-site List Sizing for Permeable Pavement Facilities without Underdrains.**

| Average Ponding Depth in Storage Reservoir | Subgrade Soil Design Infiltration Rate | Sizing Factor for Permeable Pavement Facility Area |
|---|---|---|
| 6 inches | 0.15 inch/hour | TBD |
| | 0.3 inch/hour | TBD |
| | 0.6 inch/hour | TBD |
| | 1.0 inch/hour | TBD |
| | 2.5 inch/hour | TBD |
| 12 inches | 0.15 inch/hour | TBD |
| | 0.3 inch/hour | TBD |
| | 0.6 inch/hour | TBD |
| | 1.0 inch/hour | TBD |
| | 2.5 inch/hour | TBD |

## Pre-sized Approach for Flow Control and Water Quality Treatment

The Pre-sized Approach may be used for projects with new and replaced hard surface areas up to 10,000 square feet. Under the Pre-sized Approach (refer to *Section 4.1.2*), pre-sized permeable pavement facilities without underdrains may be used to achieve Pre-developed Pasture, Peak Control and Water Quality Treatment Standards. Sizing factors for permeable pavement facilities receiving runoff from a hard surface are provided in Table 5.25. Factors are organized by performance standard and subgrade soil design infiltration rate. The design rate for the subgrade soil shall be rounded down to the nearest infiltration rate in the pre-sized table (i.e., 0.15, 0.3, 0.6, 1.0 or 2.5 inches per hour).

To use these sizing factors to meet performance standards, the facility shall meet the general requirements for permeable pavement facilities outlined in this section plus the following specific requirements:

- The permeable pavement area shall be sized using the applicable sizing factor
- The selected subsurface ponding depth (i.e., 6 or 12 inches) shall be provided in the storage reservoir. For intermediate ponding depths (between 6 and 12 inches), the sizing factor may be linearly interpolated. For subgrade slopes of 0.5 percent or greater, check dams are required to provide this subsurface ponding depth, on average, across the facility.
- To meet water quality treatment, the underlying soil shall meet the soil requirements outlined in *Section 4.5.2* or a water quality treatment course shall be used.
- No underdrain or impermeable liner may be used.

**Table 5.25. Sizing Factors for Permeable Pavement Facilities without Underdrains.**

| Ponding Depth in Storage Reservoir | Subgrade Soil Design Infiltration Rate | Sizing Factor for Permeable Pavement Facility Area[a] | | |
|---|---|---|---|---|
| | | Pre-developed Pasture Standard | Peak Control Standard | Water Quality Treatment Standard[b] |
| 6 inches | 0.15 inch/hour | TBD | TBD | TBD |
| | 0.3 inch/hour | TBD | TBD | TBD |
| | 0.6 inch/hour | TBD | TBD | TBD |
| | 1.0 inch/hour | TBD | TBD | TBD |
| | 2.5 inch/hour | TBD | TBD | TBD |
| 12 inches | 0.15 inch/hour | TBD | TBD | TBD |
| | 0.3 inch/hour | TBD | TBD | TBD |
| | 0.6 inch/hour | TBD | TBD | TBD |
| | 1.0 inch/hour | TBD | TBD | TBD |
| | 2.5 inch/hour | TBD | TBD | TBD |

[a] The minimum sizing factor is 33.3 percent because the contributing area to a facility is limited to 3 times the permeable pavement facility area.

[b] Pre-sized Approach may be used to meet basic water quality treatment. Enhanced water quality treatment may be achieved if soil suitability criteria are met (refer to *Section 4.5.2*).

Permeable Pavement Facility Area = Contributing Hard Surface Area x Factor (%)/100.

Hard Surface Area Managed = Permeable Pavement Facility Area ÷ Factor (%)/100.

The required permeable pavement facility area is calculated as a function of the hard surface area routed to it. As an example, to meet the Pre-developed Pasture Standard, the permeable pavement area would be equal to X percent of the hard surface area routed to it when the average water depth in the storage reservoir is 6 inches and the subgrade infiltration rate is between 0.25 and 0.5 inches per hour (Table 5.25).

The sizing factors for permeable pavement facilities are conservative. For infiltration rates of 0.5 and 1.0 inches per hour, modeling would likely yield ponding depth requirements less than 6 inches. Note that the minimum sizing factor is 33.3 percent because the area contributing runoff to a facility is limited to 3 times the permeable pavement facility area.

Alternatively, permeable pavement facilities can be sized using a continuous simulation hydrologic model as described below.

## Modeling Approach for On-site Performance Standard, Flow Control, and Water Quality Treatment

When using continuous simulation hydrologic modeling to size permeable pavement, the assumptions listed in Table 5.26 shall be applied. It is recommended that permeable pavement be modeled as an impervious area with runoff routed to a gravel-filled infiltration trench (with the same area as the contributing impervious area). Runoff from other areas draining to the permeable pavement surface can also be routed to the trench. The contributing area, pavement area, and average subsurface ponding depth in the aggregate storage reservoir should be iteratively sized until the Minimum Requirements for On-site Stormwater Management, Flow Control and/or Treatment are met (refer to *Volume 1 –*

*Project Minimum Requirements*). General sizing procedures for infiltration facilities are presented in *Section 4.5.1*. Specific modeling guidelines are outlined below:

- Model only the average depth of the storage reservoir occupied by ponded water before check dam overtopping or overflow. The storage reservoir aggregate above this depth, and the overlying leveling and wearing course are not modeled.
- Because the infiltration rates of the wearing course and leveling course are typically high and will not restrict flow entering the facility section, the infiltration through these layers may be neglected (i.e., not modeled).
- The area of subgrade covered by check dams must be excluded from gravel trench bottom area.

**Table 5.26. Continuous Modeling Assumptions for Permeable Pavement Facility.**

| Variable | Assumption |
|---|---|
| Precipitation Series | Seattle 158-year, 5-minute series.[a] |
| Computational Time Step | 5 minutes. |
| Permeable Pavement Facility and Contributing Area | Option 1: The selected model may have a routine specifically developed for permeable pavement that simulates run-on from other contributing drainage areas, precipitation falling on the pavement, infiltration through the pavement section, storage in the aggregate beneath the pavement, and infiltration into the underlying soil.<br>Option 2: If a permeable pavement routine is not available, represent the permeable pavement area as an impervious basin with runoff routed to a gravel-filled trench (of the same size as the permeable pavement area) with infiltration to underlying soil. Other drainage areas contributing runoff to the pavement (surface flow and interflow), if any, are also routed to the gravel trench. |
| Precipitation Applied to Facility | If using Option 1, precipitation is applied to the pavement area.<br>If using Option 2, do not apply precipitation to the trench bed because precipitation is already applied to basin before routing to trench. |
| Evaporation Applied to Facility | If using Option 1, evaporation is applied to the pavement area.<br>If using Option 2, while evaporation is applied to the impervious basin before routing to the trench. |
| Storage Reservoir Depth | Average subsurface water ponding depth in the pavement aggregate courses (average across the facility) before check dam overtopping or overflow. |
| Storage Reservoir Porosity | Assume maximum 25 percent unless test is provided showing higher porosity (up to 35 percent) for aggregate compacted and in place. |
| Subgrade Soil Design Infiltration Rate | Design infiltration rate (*Section 4.5.2*, *Appendix D*). |
| Infiltration Across Wetted Surface Area | No, if subgrade sidewalls are steeper than 2H:1V (infiltration on bottom area only) |
| Outlet Structure | Unless the selected model represents surface sheet flow when pavement section is saturated, the overflow can be simulated as overtopping an overflow riser. Overflow riser elevation is set at average maximum subsurface ponding depth. Flow may be modeled as weir flow over riser edge. Freeboard modeled within the storage reservoir shall be sufficient to allow the water surface elevation to rise above the weir or overflow pipe elevation to provide head for discharge. |

If permeable pavement has an underdrain with orifice control, the facility may be modeled as a detention vault with storage depth equivalent to the void storage in the pavement section. The storage depth would be calculated as the average depth of subsurface ponding in the storage reservoir multiplied by the porosity of the storage reservoir aggregate.

### 5.4.6.7. Minimum Construction Requirements

Proper construction methods and pre-planning are essential for the successful application of any permeable paving facility. Over compaction of the underlying soil or fine sediment contamination onto the existing subgrade and pavement section during construction will significantly degrade or effectively eliminate the infiltration capability of the facility.

Minimum requirements associated with construction of a permeable pavement facility include the following:

- Conduct field infiltration and compaction testing of the water quality treatment course (if included) prior to placement of overlying courses.
- Prevent intermixing of the various base course materials with fines and sediment. Remove and replace all contaminated material.
- Complete final subgrade excavation during dry weather on the same day bottom aggregate course is placed, when practicable.
- Use traffic control measures to protect permeable pavement subgrade areas from heavy equipment operation or truck/vehicular traffic.
- Select excavation, grading, and compaction equipment to minimize the potential for over-compaction.
- Isolate the permeable pavement site from sedimentation during construction, either by use of effective erosion and sediment control measures upstream. Alternatively, delay the excavation of the lowest 1 foot of material above the final subgrade elevation for the entire pavement area until after all sediment-producing construction activities have been completed and upstream areas have been permanently stabilized. Once the site is stabilized, the lowest 1 foot of material may be removed. For more information on site stabilization, refer to *Volume 2 – Construction Stormwater Control*.
- Conduct field infiltration test of the permeable surface after the complete pavement section is installed to verify that it meets the minimum initial uncorrected infiltration rate of 100 inches per hour (refer to testing methods in the *Wearing Course* subsection in *Section 5.4.6.5*).

### 5.4.6.8. Operations and Maintenance Requirements

Permeable pavement O&M requirements are provided in *Appendix G (BMP No. 25)*.

## 5.4.7. Perforated Stub-out Connections

### 5.4.7.1. Description

A perforated stub-out connection is a length of perforated pipe within a gravel-filled trench that is placed between roof downspouts and a stub-out connection to the public drainage system.

### 5.4.7.2. Performance Mechanisms

Perforated stub-out connections are intended to provide some flow control via infiltration during drier months. During the wet winter months, they may provide little or no flow control.

### 5.4.7.3. Applicability

As shown in the table below, perforated stub-out connections can only be applied to meet the on-site stormwater management requirement using the On-site List Approach.

| | On-site | | Flow Control | | | Water Quality | | | | |
|---|---|---|---|---|---|---|---|---|---|---|
| **BMP** | **List** | **Standard** | **Forest** | **Pasture** | **Peak** | **Basic** | **Enhanced** | **Oil Control** | **Phosphorus** | **Conveyance** |
| Perforated Stub-out Connections | ✓ | | | | | | | | | |

### 5.4.7.4. Site Considerations

The stub-out connection should be sited to allow a maximum amount of runoff to infiltrate into the ground (ideally a dry, relatively well drained, location). Site considerations for the applicability of perforated stub-out connections include:

- **Setbacks and restrictions***:* The perforated portion of the system shall meet the siting and infiltration rate requirements for infiltration facilities presented in *Section 3.2 and Section 4.5*.
- **Site prohibitions***:* The perforated pipe portion of the system shall not be located under hard or heavily compacted (e.g., driveways and parking areas) surfaces.
- Refer to *Appendix C* for additional infeasibility criteria for the On-site List Approach.

### 5.4.7.5. Design Criteria

This section provides a description and requirements for the components of perforated stub-out connections. A typical stub-out connection is shown in Figure 5.17. Design criteria are provided in this section for the following elements:

- Presettling

- Perforated pipe and trench
- Overflow

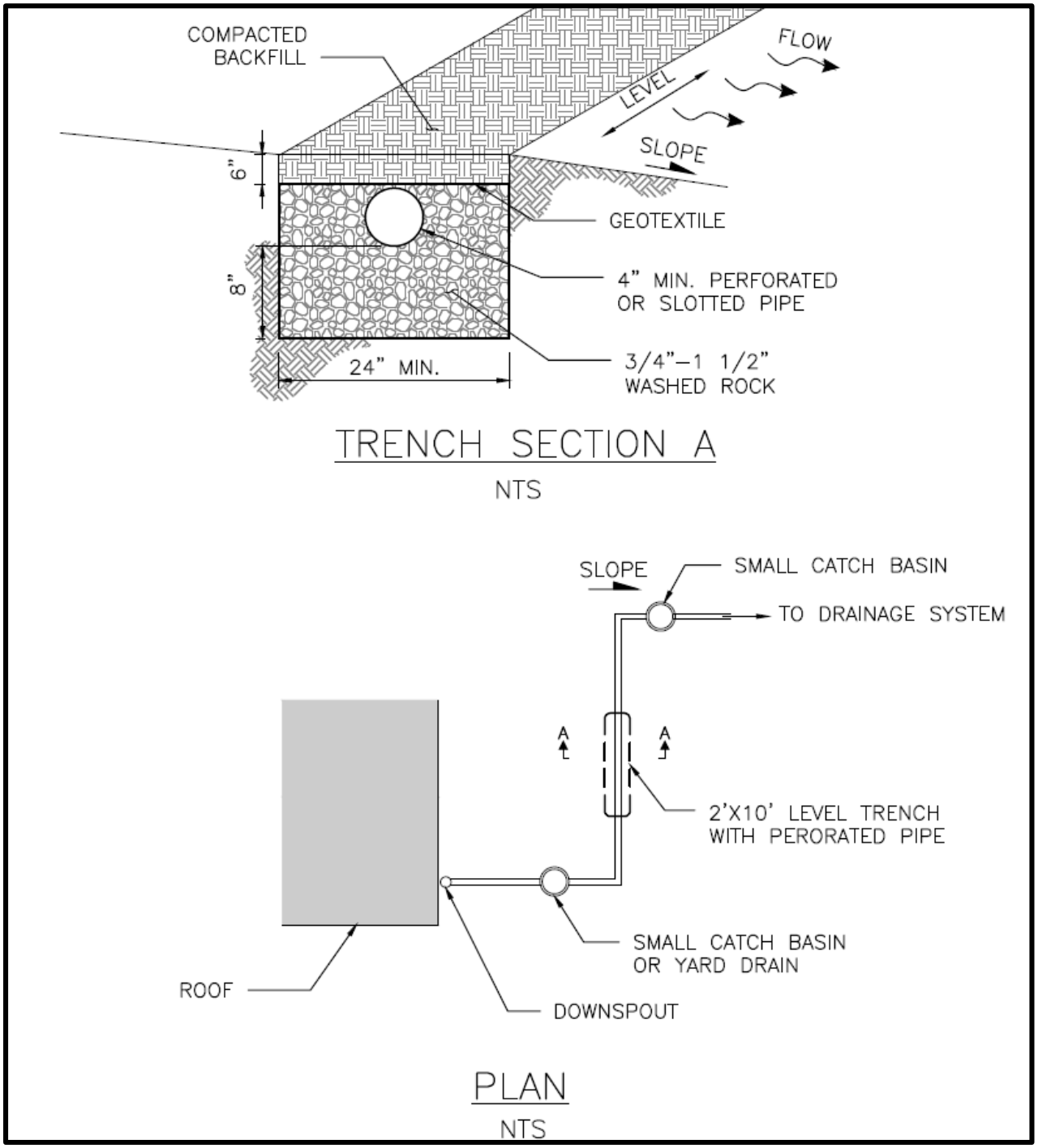


**Figure 5.17. Perforated Stub-Out Connection.**

### Presettling

- Stormwater inflows shall be routed through a catch basin or yard drain with a downturned elbow (trap). Presettling requirements are provided in *Section 4.4.5*.

### Perforated Pipe and Trench

The minimum requirements associated with the pipe and trench include the following:

- Perforated stub-out connections shall be at least 10 feet of perforated pipe per 5,000 square feet of roof area.
- The trench shall be a minimum of 2 feet wide and 18 inches deep. The bottom of the trench shall be level.
- The trench shall be filled with uniformly-graded, washed gravel with a nominal size from 3/4– to 1-1/2-inch diameter. The minimum void volume shall be 30 percent. These requirements can be met with City of Seattle Mineral Aggregate Type 4.
- The pipe length that extends through the trench shall be a perforated or slotted pipe with a minimum diameter of 4 inches. The pipe shall be placed level with the pipe invert a minimum of 8 inches above the bottom of the trench.
- The trench shall be wrapped with non-woven geotextile fabric and covered with 6 inches of compacted backfill.

### Subgrade

The minimum measured subgrade infiltration rate for perforated stub-out connections is 0.3 inches per hour.

During construction the subgrade soil surface can become smeared and sealed by excavation equipment. The design shall require scarification or raking of the side walls and bottom of the facility excavation to a minimum depth of 4 inches after excavation to restore infiltration rate.

### Overflow

Perforated stub-out connections shall have an overflow designed to convey any flow exceeding the capacity of the facility per *Section 4.3.4*. If overflow is connected to the public drainage system, a catch basin shall be installed prior to the connection to the public drainage system to prevent root intrusion into public drainage main lines.

## *5.4.7.6. BMP Credits*

### Credit for On-site List Approach

Perforated stub-outs may be selected to meet the On-site List Requirement (refer to *Section 3.3.1* and *Appendix C* for infeasibility criteria). The area of hard surface conveyed using a perforated stub-out meets the requirement.

### Pre-sized Approach

Perforated stub-out connections are not included in the Pre-sized Approach because this BMP is not eligible for flow control credits.

### Modeling Approach

Any flow reduction is variable and unpredictable. No computer modeling techniques are allowed that would predict any reduction in flow rates and volumes from the connected area.

#### *5.4.7.7. Minimum Construction Requirements*

During construction, it is critical to prevent clogging and over-compaction of the subgrade. The minimum construction requirements for infiltration trenches in *Section 5.4.2.7* apply.

#### *5.4.7.8. Operations and Maintenance Requirements*

General O&M requirements for infiltration facilities apply to perforated stub-out connections. Perforated stub-out connection O&M requirements are provided in *Appendix G (BMP No. 2)*.

## 5.4.8. Infiltration Basins

### 5.4.8.1. Description

Infiltration basins are large earthen impoundments used for the collection, temporary storage, and infiltration of stormwater runoff.

### 5.4.8.2. Performance Mechanisms

Pollutant removal and flow control occur through infiltration of stormwater into the underlying soils. Secondary pollutant removal mechanisms include filtration, adsorption, and biological uptake.

### 5.4.8.3. Applicability

An infiltration basin can be designed to provide treatment and/or flow control. This BMP can be applied to meet the requirements listed below.

| BMP | On-site | | Flow Control | | | Water Quality | | | | Conveyance |
|---|---|---|---|---|---|---|---|---|---|---|
| | List | Standard | Forest | Pasture | Peak | Basic | Enhanced | Oil Control | Phosphorus | |
| Infiltration Basin | | ✓ | ✓ | ✓ | ✓ | ✓[a] | ✓[a] | | ✓[b] | |

[a] Soil suitability criteria (*Section 4.5.2*) and applicable drawdown requirements (*Section 4.5.1*) also apply.

[b] Refer to treatment train options for infiltration BMPs included in *Section 4.4.3.2*.

### 5.4.8.4. Site Considerations

Refer to Infiltration Basins in Volume III of the SWMMWW for site considerations related to infiltration basins. Additional site considerations may apply depending on site conditions and other factors.

### 5.4.8.5. Design Criteria

Refer to Infiltration Basins in Volume III of the SWMMWW for infiltration basin design criteria.

### 5.4.8.6. BMP Sizing

Refer to Infiltration Basins in Volume III of the SWMMWW for infiltration basin sizing requirements.

### 5.4.8.7. Minimum Construction Requirements

Refer to Infiltration Basins in Volume III of the SWMMWW for infiltration basin minimum construction requirements. The following minimum construction requirements also apply to infiltration basins installed in Seattle:

- The development plan sheets shall list the proper construction sequence so that the infiltration basin is protected during construction.
- The floor of an infiltration basin shall be raked or deep tilled after final grading to restore infiltration rates.

#### *5.4.8.8. Operations and Maintenance Requirements*

Infiltration basin O&M requirements are provided in *Appendix G (BMP No. 2)*.

## 5.4.9. Infiltration Chambers

### 5.4.9.1. Description

Infiltration chambers are buried structures, typically arch-shaped, within which collected stormwater is temporarily stored and then infiltrated into the underlying soil. Infiltration chambers create an underground cavity that can provide a greater void volume than infiltration trenches and often require a smaller footprint.

### 5.4.9.2. Performance Mechanisms

Infiltration chambers can be used on their own or in combination with other BMPs to provide temporary storage of stormwater runoff and subsequent infiltration into the underlying soils. Pollutant removal mechanisms include infiltration, filtration, and soil adsorption.

### 5.4.9.3. Applicability

Infiltration chambers can be designed to provide on-site stormwater management, flow control and/or treatment. This BMP can be applied to meet the requirements listed below.

| BMP | On-site | | Flow Control | | | Water Quality | | | | Conveyance |
|---|---|---|---|---|---|---|---|---|---|---|
| | List | Standard | Forest | Pasture | Peak | Basic | Enhanced | Oil Control | Phosphorus | |
| Infiltration Chambers | | ✓ | ✓ | ✓ | ✓ | ✓[a] | ✓[a] | | ✓[b] | |

[a] Soil suitability criteria for subgrade soils (*Section 4.5.2*) and applicable drawdown requirements (*Section 5.4.1*)also apply.

[b] Refer to treatment train options for infiltration BMPs included in *Section 4.4.3.2*.

### 5.4.9.4. Site Considerations

Site considerations for the applicability of infiltration chambers are provided in *Section 3.2* and *Section 4.5*.

### 5.4.9.5. Design Criteria

The following provides a description and requirements for the components of infiltration chambers. Some or all of the components may be used for a given application depending on the site characteristics and restrictions and design objectives. Design criteria are provided in this section for the following elements:

- Flow Entrance and Presettling
- Chamber Materials and Layout
- Chamber Bedding
- Subgrade

### Flow Entrance and Presettling

Inflow pipe or a manifold system shall be connected to each infiltration chamber. Stormwater inflows shall be routed through a catch basin with or yard drain with downturned elbow (trap). Presettling requirements are provided in *Section 4.4.5*.

### Chamber Materials and Layout

Infiltration chambers can be constructed of a variety of different materials (i.e., plastic, concrete, aluminum, steel) and shapes (i.e., arch, box). Chamber spacing and depth of cover shall be per the manufacturer's requirements.

### Chamber Bedding

Infiltration chamber bedding is specified by the manufacturer. Minimum bedding shall be from 6-inches below the infiltration chamber to an elevation one half the height of the chamber on the outside of the chamber. Bedding material shall be per City of Seattle Mineral Aggregate Type 4.

### Subgrade

The minimum measured subgrade infiltration rate for infiltration chambers is 0.6 inches per hour.

During construction the subgrade soil surface can become smeared and sealed by excavation equipment. The design shall require scarification or raking of the side walls and bottom of the facility excavation to a minimum depth of 4 inches after excavation to restore infiltration rate.

### Overflow

Infiltration chambers shall have an overflow designed to convey any flow exceeding the capacity of the facility per *Section 4.3.4*. If overflow is connected to the public drainage system, a catch basin shall be installed prior to the connection to the public drainage system to prevent root intrusion into public drainage main lines.

## *5.4.9.6. BMP Sizing*

### Pre-sized Approach for Flow Control and Water Quality Treatment

The Pre-sized Approach may be used for projects with new and replaced hard surface areas up to 10,000 square feet. The Pre-sized Approach can be used for sizing arched chambers to meet storage or flow control requirements. Different materials and shapes shall use the Modeling Approach.

### Modeling Approach for On-site Performance Standard, Flow Control, and Water Quality Treatment

When using continuous hydrologic modeling to size infiltration chambers, the assumptions listed in Table 5.27 shall be applied. It is recommended that infiltration chambers be modeled as gravel trench beds with infiltration. The contributing area, chamber area, and

depth should be iteratively sized until the Minimum Requirements for Flow Control are met (refer to *Volume 1, Section 5.3*). General sizing procedures for infiltration facilities are presented in *Section 4.5.1*.

**Table 5.27. Continuous Modeling Assumptions for Infiltration Chambers.**

| Variable | Assumption |
|---|---|
| Precipitation Series | Seattle 158-year, 5-minute series. |
| Computational Time Step | 5 minutes. |
| Inflows to Facility | Surface flow and interflow from total drainage area (including impervious and pervious contributing areas) routed to facility. |
| Precipitation and Evaporation Applied to Facility | Yes, if sited under pervious surface. If model does not apply precipitation and evaporation to facility, include the facility area as additional impervious area in the post-developed basin area that contributes runoff to the facility. |
| Aggregate Storage Reservoir Depth | TBD |
| Aggregate Storage Reservoir Porosity | TBD |
| Subgrade Soil Design Infiltration Rate | Design infiltration rate (*Section 4.5.2*, *Appendix D*) |
| Infiltration Across Wetted Surface Area | No (bottom area only). |
| Outlet Structure | Overflow elevation set at average maximum subsurface ponding depth. May be modeled as weir flow over riser edge. Note that freeboard shall be sufficient to allow water surface elevation to rise above the overflow elevation to provide head for discharge. |

### *5.4.9.7. Minimum Construction Requirements*

During construction, it is critical to prevent clogging and over-compaction of the subgrade. Refer to the minimum construction requirements for infiltration trenches in *Section 5.4.2.7*.

### *5.4.9.8. Operations and Maintenance Requirements*

General O&M requirements for infiltration facilities provided in *Appendix G (BMP No. 2)* apply to infiltration chambers. Manufacturers of specific infiltration chambers may have additional O&M recommendations.

## 5.5. Rainwater Harvesting BMPs

Rainwater harvesting BMPs capture and store rainwater for beneficial use. The BMPs in this section include:

- Rainwater harvesting
- Single Family Residential (SFR) Cisterns

## 5.5.1. Rainwater Harvesting

### 5.5.1.1. Description

Rainwater harvesting is the capture and storage of rainwater for subsequent use. Runoff from roofs may be routed to cisterns for storage and beneficial non-potable uses, such as irrigation, mechanical equipment, industrial process uses, toilet flushing, and the cold water supply for laundry. The potable use of collected rainwater may be used for single family residences with proper design and approval from Public Health – Seattle & King County.

Rainwater harvesting functions can be combined with detention pipes, vaults, and cisterns (refer to *Sections 5.7.2, 5.7.3, and 5.7.4*).

### 5.5.1.2. Performance Mechanisms

Rainwater harvesting can be used to achieve reductions in peak flows, flow durations and runoff volumes. The flow control performance of rainwater harvesting is a function of contributing area, storage volume and rainwater use rate.

### 5.5.1.3. Applicability

Rainwater harvesting systems can be designed to provide on-site stormwater management and flow control, and can be an effective volume reduction practice for projects where infiltration is not permitted or desired. Rainwater harvesting has higher stormwater management benefits when designed for uses that occur regularly through the wet season (e.g., toilet flushing and cold water laundry). The use of harvested rainwater for irrigation during the dry months provides less benefit.

This BMP can be applied to meet the requirements listed below.

| | On-site | | Flow Control | | | Water Quality[a] | | | | |
|---|---|---|---|---|---|---|---|---|---|---|
| **BMP** | **List** | **Standard** | **Forest** | **Pasture** | **Peak** | **Basic** | **Enhanced** | **Oil Control** | **Phosphorus** | **Conveyance** |
| Rainwater Harvesting | ✓ | ✓ | ✓ | ✓ | ✓ | | | | | |

[a] Rainwater harvesting is not approved for pollution-generating surfaces, so the water quality standard is not applicable.

### 5.5.1.4. Site Considerations

Rainwater harvesting can be used for new or retrofit projects. Depending upon site constraints, cisterns may be installed at grade, underground, under a deck, or in a basement or crawl space. Cisterns may be used individually or connected to each other in a series for increased storage capacity. Refer to *Appendix C* for additional infeasibility criteria for the On-site List Approach.

### *5.5.1.5. Design Criteria*

This section provides descriptions, recommendations, and requirements for the common components of rainwater harvesting systems. Design criteria are provided in this section for the following elements:

- Contributing area
- Collection system
- Prefilter
- Cistern/storage system
- Distribution system
- Water treatment system
- Overflow
- Backflow prevention device

The City accepts rainwater harvesting systems with indoor and/or outdoor water use for compliance with flow control standards. The indoor use of harvested water is regulated by Public Health – Seattle & King County.

In addition to the requirements presented in this section, all components of a rainwater harvesting system shall be designed and constructed in accordance with the manufacturer's recommendations and the City of Seattle Building and Residential Code, City of Seattle Plumbing Code, and Public Health – Seattle & King County requirements, and all other applicable laws.

Refer to the Puget Sound LID Manual and ARCSA/ASPE/ANSI 63-2013: Rainwater Catchment Systems for general guidance for design of rainwater harvesting systems. Refer to *Rainwater Harvesting and Connection to Plumbing Fixtures* (Public Health – Seattle & King County 2011) and the Puget Sound LID Manual for design requirements specific to indoor use of harvested rainwater.

Links to resources on rainwater harvesting, including permit requirements, are available at the DPD website (www.seattle.gov/dpd/codesrules/codes/stormwater).

#### Contributing Area

The area contributing runoff to a rainwater harvesting system shall be a roof. Any rainwater collected from a vegetated roof underdrain may require additional treatment to remove tannins and suspended solids. Additionally vegetated roofs will naturally reduce the amount of water available for collection through the evapotranspiration of the plants and soil media.

#### Collection System

The collection system includes gutters and downspouts, as well as the piping and any other conveyance needed to route rainwater to the prefilter and on to the cistern.

### Prefilter

A prefilter shall be provided with a debris screen that protects the cistern from the intrusion of debris, insects, vermin, or other organisms. The debris screen shall be corrosion resistant and shall have openings no larger than a nominal 0.15 cm (1,500 microns) (1/16 inches) or have been certified by a government regulatory agency to remove particles greater than 500 µm. A self-cleaning prefilter is recommended.

### Cistern/Storage System

Cisterns can be constructed from a variety of materials (e.g., plastic, concrete, corrugated steel with liner, fiberglass) and placed in various locations. They can include tanks, pipes, and enclosed portions of buildings — above or underground. The minimum requirements for all cistern systems include the following:

- Cisterns shall be installed in accordance with manufacturer's installation instructions, the City of Seattle Building Code, and all applicable laws, including foundation and other structural requirements.
- Cistern/storage systems shall have access points and drains to allow inspection and cleaning.
- Cistern openings shall be designed to restrict entry from unauthorized personnel and appropriate signage shall be provided. Any cistern/storage system opening that could allow the entry of personnel shall be marked: "danger — confined space."
- Cleaning of any accumulated sediment on the bottom of the cistern shall be possible by flushing through a drain or vacuuming.
- Cisterns shall be designed to prevent mosquitoes and other nuisance insects and animals from entering the cistern system. This shall be done with 1/16-inch stainless steel mesh screening at all vents and other openings to the cistern.
- Opaque containers shall be used for aboveground cisterns to minimize algal growth.

Minimum requirements specific to underground cistern design include the following:

- Cistern/storage systems that are buried underground must have a maintenance hole riser that protrudes a minimum of 8 inches above the surrounding ground. Maintenance hole covers shall be secured and locked to prevent tampering.
- Cistern/storage systems shall meet buoyancy resistance requirements per manufacturer's specifications, the City of Seattle Building Code, and the City of Seattle Plumbing Code.

### Distribution System

Distribution of collected rainwater may be accomplished by gravity or by pumps and pipes to move water from the storage system to the end use area. For gravity fed irrigation use, an outlet spigot can be installed near the bottom of the tank. Water shall be drawn from at least 4 inches above the bottom of the tank or by use of a floating screened inlet in the tank. Any piping and/or fixtures containing collected rainwater shall be appropriately labeled per code.

### Water Treatment System

Water quality treatment is typically required to protect the delivery and distribution system and to improve the quality of the collected water for the intended use. The pre-filter may be sufficient for a gravity fed irrigation system, while a pumped system for toilet flushing may require sediment filtration to 20µ-50µ.

Additional discussion of treatment for indoor use is outside of the scope of this manual. Refer to the Puget Sound LID Manual and/or ARCSA/ASPE/ANSI 63-2013: Rainwater Catchment Systems for additional guidance on indoor use of harvested rainwater. Approval is required by Public Health – Seattle & King County for any project routing harvesting water to an indoor plumbing system.

### Overflow

Minimum requirements associated with overflow design include the following:

- Overflows shall be designed to convey excess flow to the approved point of discharge per *Section 4.3.4*.
- The overflow pipe shall have a conveyance capacity that is equal to or greater than all of the conveyance inlets delivering rainwater to the cistern. The minimum overflow pipe diameter shall be 4 inches.

### Backflow Prevention Device

Refer to Public Health – Seattle & King County and the City of Seattle Plumbing Code for backflow prevention and cross-connection control requirements for back-up water supply.

## *5.5.1.6. BMP Sizing*

### Sizing for On-site List Approach

Rainwater harvesting may be selected to meet the On-site List Requirement (refer to *Section 3.3.1* and *Appendix C* for infeasibility criteria). To meet the requirement, document (using the Modeling Approach described below) that the rainwater harvesting system meets the On-site Performance Standard for the contributing area.

### Modeling Approach for On-site Performance Standard and Flow Control

**Step 1: Determine rainwater demand**

When estimating rainwater demand for the purposes of modeling flow control benefits, only year-round indoor uses may be included (e.g., seasonal irrigation may not be considered). Typical assumptions for non-potable and potable uses are provided in Tables 5.28 and 5.29 below.

**Table 5.28. Typical Assumptions for Non-Potable Rainwater Demand Calculations.**

| Use | Assumptions | Source |
|---|---|---|
| **Commercial Building Uses for Employees** | | |
| Number of Employees | Actual[a] | |
| Employees that are male | 50% | |
| Water closet (toilet) uses per male employee | 1 use/day | LEED Reference Guide |
| Urinal uses per male employee | 2 uses/day | LEED Reference Guide |
| Water closet uses per female employee | 3 uses/day | LEED Reference Guide |
| Toilet and urinal fixture flow rates | Actual (gallons per use) | Manufacturer's data |
| **Commercial Building Uses for Visitors** | | |
| Number of Visitors | Actual[b] | |
| Water closet (toilet) uses per male visitor | 0.2 use/day | LEED Reference Guide |
| Urinal uses per male visitor | 0.1 use/day | LEED Reference Guide |
| Water closet (toilet) uses per female visitor | 0.1 uses/day | LEED Reference Guide |
| Toilet and urinal fixture flow rates | Actual (gallons per use) | Manufacturer's data |
| **Residential Building** | | |
| Water closet (toilet) uses per resident | 5.1 uses per day per person | ARCSA/ASPE/ANSI 63-2013 Table E.1 |
| Toilet and urinal fixture flow rates | Actual (gallons per use) | Manufacturer's data |
| Cold Water leg of laundry | 80% | Drinking Water Research, July–September 2012, WRF, Table 8 |
| Laundry usage | 0.37 loads/day/capita[c] | Residential End Uses of Water Study (1999) AWWA |
| Residents per bedroom | 2 for the first bedroom and 1 for each other bedroom per unit | Assumed |

[a] Typically not more than 1 employee per 2,000 sf of retail or 1 employee per 150 sf of office.

[b] Typically not more than 150 visitors per day for commercial uses.

[c] Derived from 41 gallons/load and 15 gallons per day per person from the Residential End Uses of Water Study (1999), AWWA.

**Table 5.29. Typical Assumptions for Potable Rainwater Demand Calculations.**

| Use | Usage | Duration | Source |
|---|---|---|---|
| **Commercial Building Uses for Employees** | | | |
| Lavatory Faucet | 3 uses/day | 30 seconds/use | LEED Reference Guide |
| Shower | 0.1 uses/day | 300 seconds/use | LEED Reference Guide |
| Kitchen Sink | 1 use/day | 15 seconds/use | LEED Reference Guide |
| Faucet, shower and sink fixture flow rates | Actual (gallons/minute) | – | Manufacturer's data |
| **Commercial Building Uses for Visitors** | | | |
| Lavatory Faucet | 0.5 use/day | 30 seconds/use | LEED Reference Guide |
| Faucet fixture flow rates | Actual (gallons/minute) | – | Manufacturer's data |
| **Residential Building Uses[a]** | | | |
| Faucets | 10.9 gallons/day/capita | – | Residential End Uses of Water Study (1999) AWWA |
| Shower | 11.6 gallons/day/capita | – | Residential End Uses of Water Study (1999) AWWA |
| Faucet and shower fixture flow rates | Actual (gallons/minute) | – | Manufacturer's data |

[a] Additional residential potable water use rates can be obtained from http://www.allianceforwaterefficiency.org/residential-end-uses-of-water-study-1999.aspx. This study is in the process of being updated and new data may be available in 2015 or 2016.

Daily demand is calculated for each use as shown in the examples below:

- Water closet demand for female employees in commercial building (gallons/day) = total number of employees x 50% x 3 uses/day x toilet flow rate (gallons/use)
- Lavatory faucet demand for visitors in commercial building (gallons/day) = [number of visitors per day x 0.5 uses/day x 30 seconds/use x faucet flow rate (gallons/minute)] ÷ 60 seconds/minute

The rainwater uses are summed to calculate a total daily demand in gallons per day. For commercial buildings that do not operate daily, a multiplier is applied to the total demand (i.e., a multiplier of 5/7 is applied if business is open 5 days per week).

The average demand (D) in cubic feet per hour is then calculated by dividing the demand in gallons per day by 179.5. The rainwater demand is then reduced by a factor of 15 percent (multiplied by a factor of 0.85) to account for lower than anticipated water use (e.g., periods of vacancy).

### Step 2: Calculate the "Infiltration Rate" Equivalent to the Rainwater Demand

In order to represent the daily rainwater demand in the continuous simulation model, the equivalent cistern "infiltration rate" is calculated as follows.

Equivalent Cistern "Infiltration Rate" (inch/hour) = D x (12 inches/foot)/A, where:

D = Average Daily Rainwater Demand (cubic feet per hour)
A = Cistern Footprint Area (square feet)

**Step 3: Determine Contributing Roof Area**

The actual roof area draining to the cistern is the contributing roof area.

**Step 4: Integrate Rainwater Harvesting into Development Site Model**

In an approved continuous hydrologic model, runoff from the contributing roof area is directed to a storage element (e.g., vault, cistern) with an infiltration routine to represent the cistern with rainwater use (refer to Table 5.30). The equivalent "infiltration rate", calculated as shown above, is applied to the bottom area of the storage element. The size of the storage element and/or the equivalent "infiltration rate" (rainwater use rate) are adjusted to achieve the desired level of performance. Note that when the storage element size is modified, the equivalent "infiltration area" shall be updated based on the new cistern footprint area (refer to the equation in Step 2).

If rainwater harvesting does not achieve the applicable stormwater performance standard(s), overflow from the storage element can be routed to a downstream stormwater management practice (e.g., detention, bioretention) that can be sized to meet the standard(s).

**Table 5.30. Continuous Modeling Assumptions for Rainwater Harvesting.**

| Variable | Assumption |
|---|---|
| Precipitation Series | Seattle 158-year, 5-minute series |
| Computational Time Step | 5-minutes |
| Inflows to Cistern | Surface flow from drainage area (roof area) routed to facility |
| Storage in Cistern | Storage element (e.g., vault, cistern) |
| Rainwater Demand | Represent rainwater demand as an equivalent "infiltration rate" applied to the bottom of the storage element |
| Outlet Structure | Overflow elevation set at live storage depth. May be modeled as weir flow over riser edge. Note that freeboard shall be sufficient to allow water surface elevation to rise above the overflow elevation to provide head for discharge. |

### *5.5.1.7. Minimum Construction Requirements*

Rainwater harvesting systems shall be constructed according to the manufacturer's recommendations, the City of Seattle Building Code, the City of Seattle Plumbing Code , and all applicable laws.

### *5.5.1.8. Operations and Maintenance Requirements*

Rainwater harvesting O&M requirements are provided in *Appendix G (BMP No. 23)*. Additional O&M guidance can be found in ARCSA/ASPE/ANSI 63-2013: Rainwater Catchment Systems.

## 5.5.2. Single Family Residential (SFR) Cisterns

### 5.5.2.1. Description

Detention cisterns (*Section 5.7.4*) can be designed to allow rainwater harvesting of roof runoff for outdoor irrigation use. For single-family residential (SFR) projects, these combined harvesting and detention cisterns (referred to as SFR cisterns).

The SFR cistern requires seasonal operation of a valve to detain water through the winter months.

### 5.5.2.2. Performance Mechanisms

SFR cisterns provide flow attenuation by slowly releasing low flows through an orifice.

### 5.5.2.3. Applicability

SFR cisterns can be applied to meet the requirements listed below.

| BMP | On-site | | Flow Control | | | Water Quality | | | | Conveyance |
|---|---|---|---|---|---|---|---|---|---|---|
| | List | Standard | Forest | Pasture | Peak | Basic | Enhanced | Oil Control | Phosphorus | |
| SFR Cisterns | ✓ | | | | | | | | | |

### 5.5.2.4. Site Considerations

SFR cisterns can be used on any new or retrofit single-family residential project. Refer to *Appendix C* for additional infeasibility criteria for the On-site List Approach.

### 5.5.2.5. Design Criteria

The following provides descriptions, recommendations, and requirements for the common components of cistern detention systems. A schematic for a typical SFR cistern are shown in Figure 5.18. Design criteria are provided in this section for the following elements:

- Contributing area
- Collection system
- Screen/debris excluder
- Cistern
- Flow control orifice
- Overflow

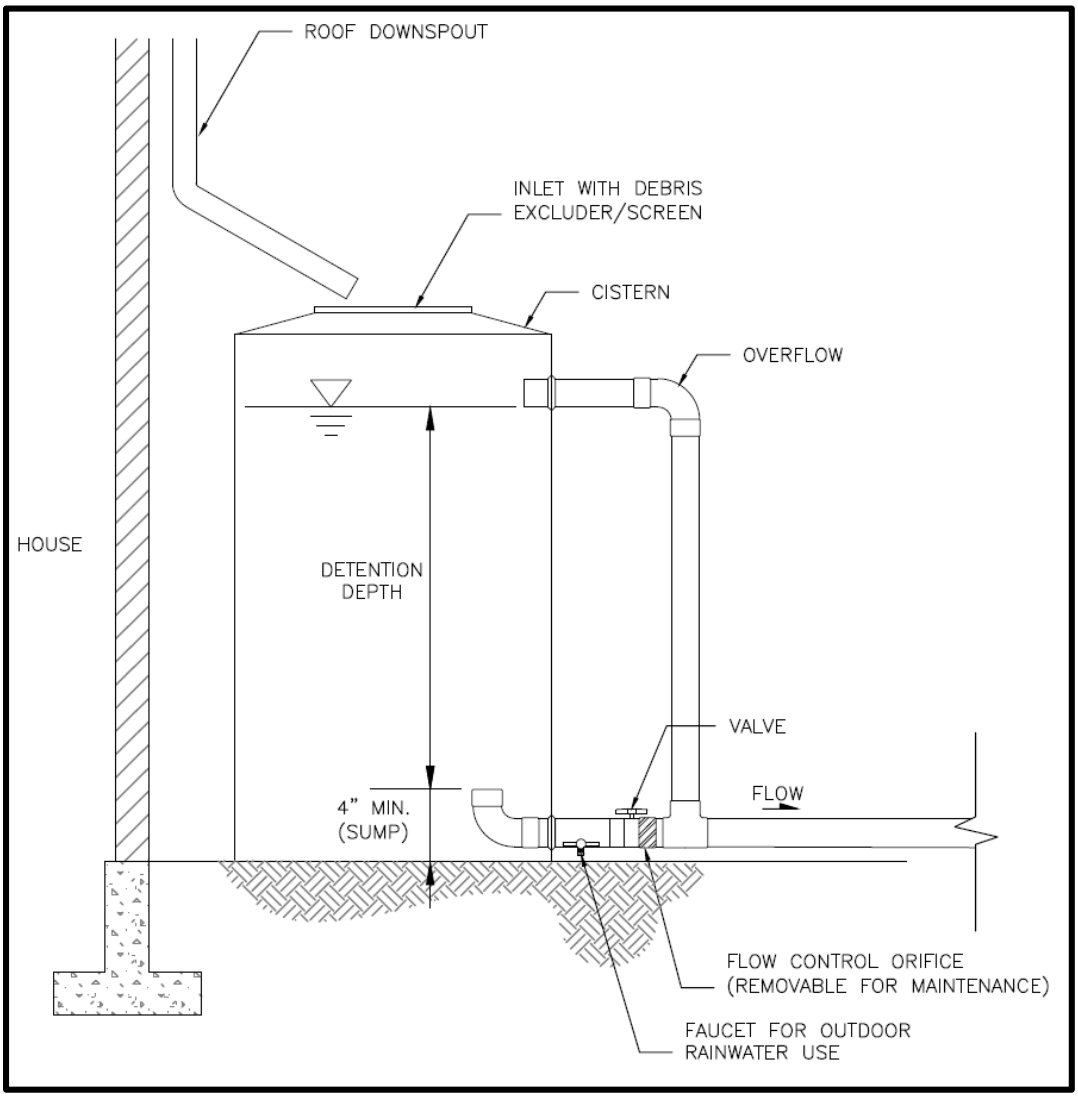


**Figure 5.18. Detention Cistern with Harvesting Capacity for Single Family Residential Projects Only.**

## Contributing Area

The area contributing runoff to a SFR cistern shall not be pollution generating (e.g., surfaces subject to vehicular traffic are not acceptable).

To protect the water quality of the rainwater harvested, avoid collecting runoff from roof surfaces comprised of materials such as copper or zinc that may release contaminants into your system. Also avoid collecting runoff from roof materials treated with fungicides or herbicides.

## Collection System

Collection systems include gutters and downspouts, as well as piping and any other conveyance needed to route runoff from the roof to the cistern.

Rainwater use shall be for outdoor irrigation uses only.

### Screens/Debris Excluder

A filter screen or other debris barrier is required to prevent insects, leaves, and other larger debris from entering the system. A self-cleaning inlet filter is recommended.

### Cistern

Cisterns are commonly constructed of fiberglass, polyethylene, concrete, metal, or wood. Tanks can be installed at or below grade, and individually or in series.

Minimum requirements associated with cistern design include the following:

- If cistern height exceeds 4.5 feet (excluding piping), width exceeds 4 feet, or storage volume exceeds 600 gallons, the cistern may be subject to stricter Land Use Code (SMC Title 23) setback requirements.
- All cisterns shall be installed in accordance with manufacturer's installation instructions.
- Cisterns shall be designed to prevent mosquitoes and other nuisance insects and animals from entering the cistern system. This can be done with tight-fitting covers and appropriate screening at all openings to the cistern.
- Opaque containers shall be used for aboveground cisterns to prevent penetration of sunlight to minimize algal growth.
- Minimum cistern size shall be that of a rain barrel (typically 55 gallons).

### Flow Control Orifice

Minimum requirements associated with flow control orifice design include the following:

- Cisterns shall be aboveground and have an orifice diameter of 0.25 inches.
- Minimum 4-inch sump shall be provided to protect the orifice from sediment.

### Overflow

Cisterns shall have an overflow to convey water exceeding the detention capacity of the system to an approved point of discharge or another BMP (e.g., bioretention area, vegetated cell, or infiltration trench) per *Section 4.3.4*. Conveyance may be provided by gravity flow or by pumps, but gravity flow is preferred.

## *5.5.2.6. BMP Sizing*

### Sizing for On-site List Approach

SFR cisterns may be selected to meet the On-site List Requirement (refer to *Section 3.3.1* and *Appendix C* for infeasibility criteria). The area draining to a properly sized cistern meets the requirement. The cistern shall have three feet of live storage between the low flow orifice and the overflow, and have a 0.25 inch diameter low flow orifice. The minimum cistern bottom area is provided in Table 5.31. For contributing areas up to 400 square feet, the

minimum cistern bottom is 6.7 square feet. For larger contributing areas, the minimum cistern bottom areas shall be calculated using the sizing factor or sizing equation provided.

**Table 5.31. On-site List Sizing for SFR Cisterns.**

| Contributing Area (square feet) | Minimum Cistern Bottom Area<br>On-site Performance Standard |
|---|---|
| 150–400 | TBD |
| 401–500 | TBD |
| 501–750 | TBD |
| 751–1,000 | TBD |
| 1001–1,500 | TBD |
| 1501–2,000 | TBD |
| > 2,000 | TBD |

### *5.5.2.7. Minimum Construction Requirements*

Refer to the construction-related issues outlined above as part of the design criteria. An additional construction requirement is as follows:

Submit field changes to the flow control device assembly, including elevation changes, to the Engineer of Record for confirmation that the device still meets the design requirements.

### *5.5.2.8. Operations and Maintenance Requirements*

SFR cistern O&M requirements are provided in *Appendix G (BMP No. 23)*.

The home owner shall open the valve to engage the flow control orifice during the non-growing season (approximately October thru April or May). If the valve is not opened during this time, the cistern will fill and overflow, eliminating the detention benefits of the system. A plan shall be submitted demonstrating how the O&M requirements will be met.

## 5.6. Alternative Surface BMPs

Alternative surface BMPs convert a conventional impervious surface to a surface that reduces the amount of stormwater runoff and also provides flow control. The BMPs in this section include:

- Vegetated roof systems
- Permeable pavement surfaces

## 5.6.1. Vegetated Roof Systems

### 5.6.1.1. Description

Vegetated roofs are areas of living vegetation installed on top of buildings, or other above-grade impervious surfaces. Vegetated roofs are also known as ecoroofs, green roofs, and roof gardens.

A vegetated roof consists of a system in which several materials are layered to achieve the desired vegetative cover and stormwater management function (refer to Figure 5.19). Design components vary depending on the vegetated roof type and site constraints, but may include a waterproofing material, a root barrier, a drainage layer, a separation fabric, a growth media (soil), and vegetation. Vegetated roof systems are categorized by the depth and the types of courses used in their construction.

- **Intensive roofs**: Intensive roofs are deeper installations, comprised of at least 6 inches of growth media and planted with ground covers, grasses, shrubs and sometimes trees.
- **Extensive roofs***:* Extensive roofs are shallower installations, comprised of less than 6 inches of growth media and planted with a palette of drought-tolerant, low maintenance ground covers. Extensive vegetated roofs have the lowest weight and are typically the most suitable for placement on existing structures. Extensive systems are further divided into two types:
    - Single-course systems consist of a single growth media designed to be freely draining and support plant growth.
    - Multi-course systems include both a growth media layer and a separate, underlying drainage layer.

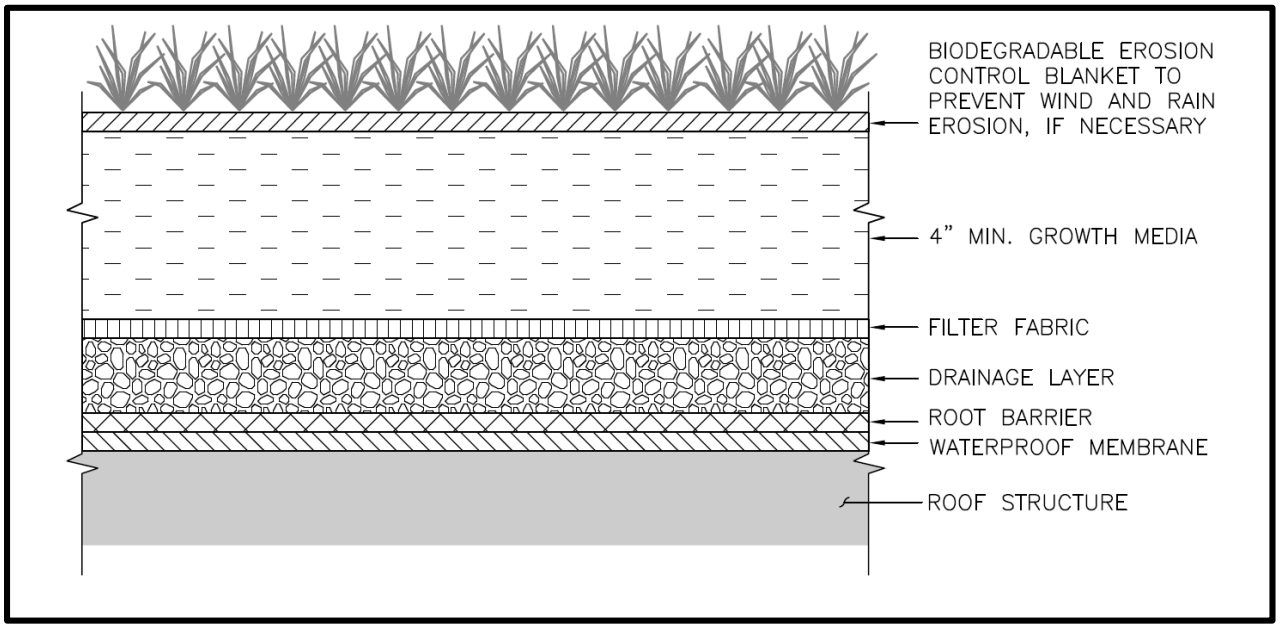


**Figure 5.19. Vegetated Roof System.**

The following types of vegetated roof systems are acceptable for flow control compliance:

- Intensive systems
- Extensive multi-course systems (and commercially available modular systems) with at least 4 inches of growth media
- Extensive single-course systems with at least 4 inches of growth media

### 5.6.1.2. Performance Mechanisms

Vegetated roof systems can provide flow control via attenuation, soil storage, and losses to interception, evaporation, and transpiration.

### 5.6.1.3. Applicability

Vegetated roof systems can be designed to provide on-site stormwater management and flow control. The degree of flow control provided by vegetated roofs varies depending on the growth media (soil) depth, growth media composition, drainage layer characteristics, vegetation type, roof slope, and other design considerations. This BMP can be applied to meet or partially meet the requirements listed below.

| | On-site | | Flow Control | | | Water Quality | | | | |
|---|---|---|---|---|---|---|---|---|---|---|
| **BMP** | **List** | **Standard** | **Forest** | **Pasture** | **Peak** | **Basic** | **Enhanced** | **Oil Control** | **Phosphorus** | **Conveyance** |
| Vegetated Roof System | ✓ | ✓[a] | ✓[a] | ✓[a] | ✓[a] | | | | | |

[a] Standard may be partially achieved.

### 5.6.1.4. Site Considerations

Vegetated roof systems for stormwater management are accepted for roof slopes between 1 and 22 degrees (0.2:12 and 5:12), but require additional analysis at slopes exceeding 10 degrees (2:12).

A primary consideration for the feasibility of vegetated roofs is the structural capability of the roof and building structure. Related factors, including design load, slipping and shear issues, and wind load, are outside the scope of this manual. Refer to the City of Seattle Building Code for structural requirements. Refer to *Appendix C* for additional infeasibility criteria for the On-site List

### 5.6.1.5. Approach.

#### Design Criteria

The following sections provide a description, recommendations, and requirements for the common components of vegetated roof systems. Typical components of a vegetated roof are shown in Figure 5.19. Design criteria are provided in this section for the following elements:

- Roof slope
- Vegetation
- Growth media
- Drainage layer
- Drain system and overflow

While vegetated roofs will include additional system components (e.g., waterproof membrane, root barrier, separation fabric for multi-course systems), the design and construction requirements for these components are outside of the scope of this manual.

Refer to the Puget Sound LID Manual for a more detailed description of the components of and design criteria for vegetated roofs, as well as additional references and design guidance.

## Roof Slope

Vegetated roofs can be applied to a range of rooftop slopes; however, steeper slopes may result in reduced flow control performance and may warrant a more complicated design (e.g., lateral support measures). Roofs with slopes between 1 and 5 degrees (0.2:12 and 1:12) are the easiest to install, are the least complex, and generally provide the greatest stormwater storage capacity per inch of growth media.

For on-site or flow control compliance, the roof slope shall be between 1 and 22 degrees (0.2:12 and 5:12). Roofs with slopes greater than 10 degrees (2:12) require an analysis of engineered slope stability.

## Vegetation

Vegetation used on extensive vegetated roofs shall be drought tolerant, self-sustaining, low maintenance, and perennial or self-sowing. Appropriate plants should also be able to withstand heat, cold, periodic inundation and high winds. Vegetation with these attributes typically includes succulents, grasses, herbs, and wildflowers that are adapted to harsh conditions. Refer to the Green Factor plant list (DPD Director's Rule 10-2011). Refer to the Puget Sound LID Manual for additional vegetation guidance for vegetated roofs.

Minimum requirements associated with vegetation design include the following:

- The design plans shall specify that vegetation coverage of selected plants will achieve 80 percent coverage within 2 years.
- For non-Single Family Residential projects, plant spacing and plant size shall be designed to achieve specified coverage by a licensed landscape architect.
- Vegetation shall be suitable for rooftop conditions (e.g., hot, cold, dry, and windy).
- Plants shall not require fertilizer, pesticides or herbicides after 2-year establishment period.

## Growth Media

Vegetated roof systems use a light-weight growth media with adequate fertility and drainage capacity to support plants and allow filtration and storage of water. Growth media composition (fines content and water holding capacity) is key to flow control performance. Refer to the Puget Sound LID Manual for additional guidance on growth media design.

Minimum requirements associated with the growth media design include the following:

- The growth media shall be a minimum of 4 inches deep. Refer to the DPD website (www.seattle.gov/dpd/codesrules/codes/stormwater) for a growth media specification. Approved media testing labs and approved media products are also provided on the website.
- For non-Single Family Residential projects, growth media depth and characteristics shall support growth for selected plant species and shall be approved by a licensed landscape architect.
- Vegetated roofs shall not be subject to any use that will significantly compact the growth media.
- Unless designed for foot traffic, vegetated roof areas that are accessible to the public shall be protected (e.g., signs, railing, fencing) from foot traffic and other loads.
- Biodegradable erosion control blanket or other measures to control erosion of growth media shall be maintained until 90 percent vegetation coverage is achieved.

## Drainage Layer

Intensive and extensive multi-course vegetated roof systems shall include a drainage layer below the growth media. The drainage layer is a multipurpose layer designed to provide void spaces to hold a portion of the water that passes through the growth media and to channel the water to the roof drain system. The drainage layer can consist of a layer of aggregate or a manufactured mat or board that provides an open free-draining area. Many manufactured products include egg carton shaped depressions that retain a portion of the water for eventual evapotranspiration.

## Drain System and Overflow

Vegetated roof systems shall be equipped with a roof drainage system capable of collecting subsurface and surface drainage and conveying it safely to a downstream BMP or an approved point of discharge. To facilitate subsurface drainage, interceptor drains (i.e., underdrains) are often installed at a regular spacing to prevent excessive moisture build up in the media and convey water to the roof drain. Roof outlets shall be protected from encroaching plant growth and loose gravel, and shall be constructed and located so that they are permanently accessible.

### *5.6.1.6. BMP Credits*

#### Credit for On-site List Approach

A vegetated roof system may be selected to meet the On-site List Requirement (refer to *Section 3.3.1* and *Appendix C* for infeasibility criteria). The hard surface area covered by a vegetated roof system meets the requirement. To account for roof areas that cannot feasibly be covered by a vegetated roof system (e.g., access ways, roof vents), the entire roof area meets the On-site List Requirement if 80 percent of the roof is covered by a vegetated roof. If a smaller portion of the roof is covered by a vegetated roof, only the covered portion of the roof meets the On-site List Requirement and an additional BMP is required for the remaining area.

#### Pre-sized Approach for Flow Control

The Pre-sized Approach may be used for projects with new and replaced hard surface areas up to 10,000 square feet. Under the Pre-sized Approach (refer to *Section 4.1.2*), flow control credits towards meeting the Pre-developed Pasture and Peak Control Standards may be partially achieved by vegetated roof systems. Credits for vegetated roofs are provided in Table 5.32, organized by performance standard and growth media depth. These credits can be applied to reduce the hard surface area requiring flow control. Since the credits for vegetated roofs are less than 100 percent, the standard cannot be completely achieved and additional flow control measures will be required. As an example, for a site subject to the Peak Control Standard, a multi-course vegetated roof with 4 inches of growth media would receive a 71 percent credit. Therefore, 71 percent of the impervious area covered by the vegetated roof can be excluded from drainage calculations. The impervious area used to size the downstream flow control facility would be calculated as 29 percent of the impervious area covered by the vegetated roof.

**Table 5.32. Flow Control Credits for Vegetated Roofs.**

| Course / Media Depth | Credit (%) | |
|---|---|---|
| | Pre-developed Pasture Standard | Peak Control Standard |
| Single-Course / 4 inches | TBD | TBD |
| Multi-Course / 4 inches | TBD | TBD |
| Multi-Course / 8 inches | TBD | TBD |

Impervious Area Managed = Vegetated roof Area x Credit (%)/100.

The flow control credits outlined above are applicable only if the vegetated roof meets the minimum design requirements outlined in this section and the minimum media depth specified in Table 5.32.

Alternatively, vegetated roofs can be sized using a continuous model as described below.

#### Modeling Approach for On-site Performance Standard and Flow Control

When using continuous simulation hydrologic modeling to quantify the on-site stormwater management and/or flow control performance of vegetated roof systems, the assumptions

listed in Table 5.33 shall be applied. It is recommended that vegetated roofs be modeled as layers of aggregate with surface flows, interflow, and exfiltrating flow routed to an outlet.

**Table 5.33. Continuous Modeling Assumptions for Vegetated Roof Systems.**

| Variable[a] | Assumption |
|---|---|
| Precipitation Series | Seattle 158-year, 5-minute series |
| Computational Time Step | 5-minutes |
| Inflows to Facility | None |
| Precipitation and Evaporation Applied to Facility | Yes |
| Depth of Material (inches) | Growth media/soil depth (minimum of 4 inches). Currently, MGSFlood and the Western Washington Hydrology Model (WWHM) are not capable of representing the flow control benefits of the drainage layer or other storage beneath the growth media. |
| Vegetative Cover | Ground cover or shrubs. Shrubs are appropriate only when growth media is 6 inches or greater. |
| Length of Rooftop (ft) | The length of the surface flow path to the roof drain |
| Slope of Rooftop (ft/ft) | The slope of the vegetated roof |
| Discharge from Facility | Surface flow, interflow and exfiltrated flow from vegetated roof module routed to downstream BMP or point of compliance. Note that the exfiltrated flow (flow infiltrated through the media and collected by the drainage layer) is tracked as groundwater in MGSFlood and WWHM. |

[a] Depending upon the hydrologic model used, some inputs may not be requested.

The media depth can be modified to achieve various degrees of flow control. Because the on-site stormwater management and flow control standards cannot typically be achieved using a vegetated roof, additional downstream flow control measures may be required.

### *5.6.1.7. Minimum Construction Requirements*

The growth media shall be protected from over compaction during construction.

### *5.6.1.8. Operations and Maintenance Requirements*

Vegetated roof system O&M requirements are provided in *Appendix G (BMP No. 27)*. A Landscape Management Plan shall be developed and implemented for vegetation O&M. If an irrigation system is included, an Irrigation Design and Operation Plan shall be included in the Landscape Management Plan.

## 5.6.2. Permeable Pavement Surfaces

### 5.6.2.1. Description

Permeable pavement is a paving system which allows rainfall to percolate into the underlying subgrade. Two categories of permeable pavement BMPs are included in this manual: permeable pavement surfaces and permeable pavement facilities. A comparison of these BMPs is provided in *Section 5.4.6*.

A permeable pavement surface consists of a pervious wearing course (e.g., porous asphalt, pervious concrete) and an aggregate subbase installed over subgrade soil. The aggregate subbase is designed to manage only the water which falls upon it. Because permeable pavement surfaces are designed to function as a permeable land surface and not intended to manage runoff from other surfaces, they are not considered infiltration facilities and have less onerous siting and design requirements.

### 5.6.2.2. Performance Mechanisms

Flow control occurs through temporary storage of stormwater runoff in the voids of the aggregate material and subsequent infiltration of stormwater into the underlying soils. Pollutant removal mechanisms include infiltration, filtration and sedimentation, biodegradation, and soil adsorption.

### 5.6.2.3. Applicability

Permeable pavement surfaces can be designed to provide on-site stormwater management, flow control and/or water quality treatment. This BMP can be applied to meet or partially meet the requirements listed below.

| | On-site | | Flow Control | | | Water Quality | | | | |
|---|---|---|---|---|---|---|---|---|---|---|
| **BMP** | **List** | **Standard** | **Forest** | **Pasture** | **Peak** | **Basic** | **Enhanced** | **Oil Control** | **Phosphorus** | **Conveyance** |
| Permeable Pavement Surface | ✓ | ✓ | ✓[a] | ✓[a] | ✓[a] | ✓[a, b] | ✓[a, b] | | | |

[a] Standard may be partially or completely achieved depending upon subgrade slope, infiltration rate of subgrade soil, and whether aggregate subbase is laid above or below surrounding grade.

[b] Underlying soil shall meet the treatment soil requirements outlined in *Section 4.5.2* or a water quality treatment course shall be included per *Section 4.5.6.5*.

### 5.6.2.4. Site Considerations

Since permeable pavement surfaces are not designed to receive runoff from other surfaces and are designed to function as a permeable land surface, they are not considered infiltration facilities. Therefore, the restrictions related to infiltration facilities (e.g., restrictions, setbacks, separation from groundwater) are not applicable. An exception is that infiltration testing is required for permeable pavement surfaces when hydrologic modeling will be

conducted to evaluate performance relative to the flow control, water quality treatment or On-site Performance Standard. Site considerations for the applicability of permeable pavement surfaces include:

- **Site topography**: The recommended maximum surface (wearing course) slope for permeable pavement surfaces is 6 percent to allow efficient storage of water within the subbase. For vehicular traction, the maximum surface slope varies by wearing course type (refer to industry guidelines).

  The recommended maximum subgrade slope for permeable pavement applications is 6 percent. Subgrades with slopes exceeding 5 percent require subsurface check dams to promote storage in the subgrade. At steeper subgrades slopes, design and construction become more complex and the construction cost increases.

- **Land use**: Because permeable pavement can clog with sediment, permeable pavement surfaces are not recommended where sediment and pollutant loading is unavoidable, including the following conditions:
  - Excessive sediment contamination is likely on the pavement surface (e.g., construction areas, landscaping material yards).
  - It is infeasible to prevent stormwater run-on to the permeable pavement from unstabilized erodible areas without presettling.
  - Regular, heavy application of sand is anticipated for maintaining traction during winter, or the facility is in close proximity to areas that will be sanded. A minimum seven foot clearance is required between a permeable pavement facility and the travel lane of sanded arterial roads.
  - Sites where the risk of concentrated pollutant spills are more likely (e.g., gas stations, truck stops, car washes, vehicle maintenance areas, industrial chemical storage sites).

- **Accessibility**: As for standard pavement design, ADA accessibility issues shall be addressed when designing a permeable pavement surface, particularly when using pavers.

- **Subsurface contamination**: Permeable pavement surfaces shall not be sited:
  - Within 10 feet of an underground storage tank (or connecting underground pipes) used to store petroleum products, chemicals, or liquid hazardous wastes.
  - Where the site is a contaminated site or abandoned landfill

- Refer to *Appendix C* for additional infeasibility criteria for the On-site List Approach.

### *5.6.2.5. Design Criteria*

This section provides descriptions, recommendations, and requirements for the common components of permeable pavement surfaces. Some, or all, of the components may be used for a given application depending on the permeable pavement type (e.g., porous asphalt, pavers, etc.), site characteristics and restrictions, and design objectives. Typical components of a permeable pavement surface are shown in Figure 5.20. The design criteria for the

following components are the same as those presented for permeable pavement facilities (refer to *Section 5.4.6*):

- Wearing course
- Leveling course
- Subgrade
- Geotextile
- Water quality treatment course

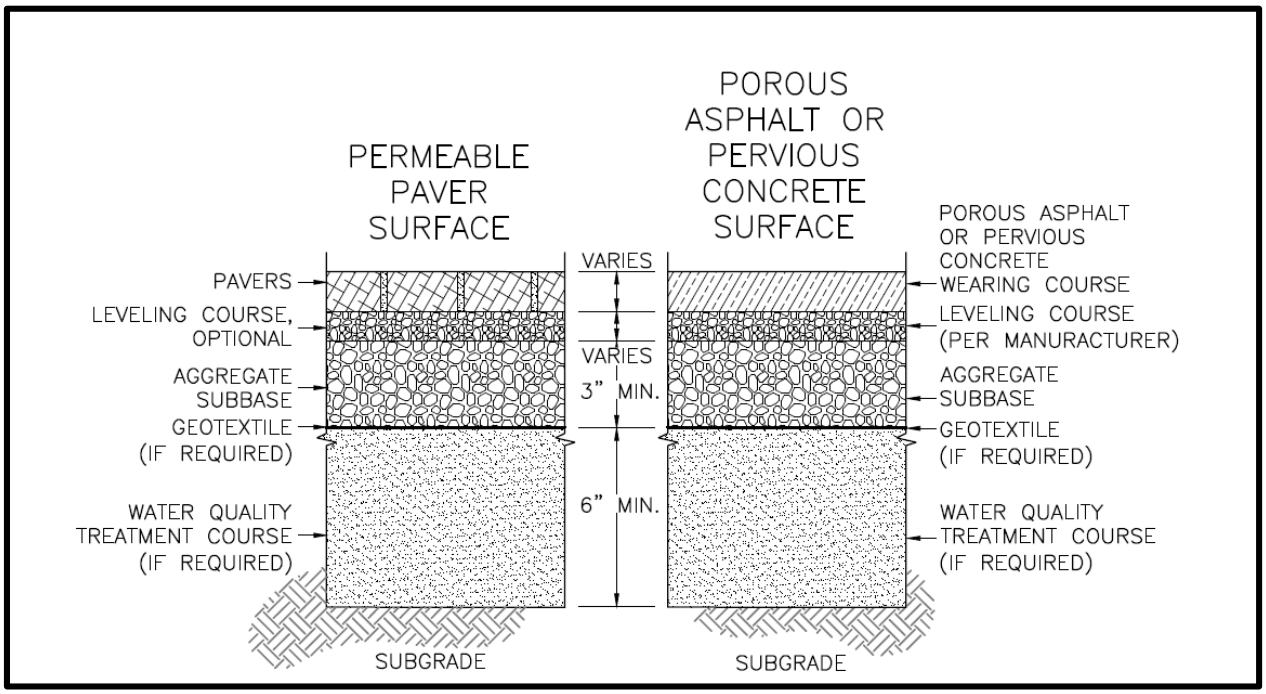


**Figure 5.20. Permeable Pavement Surface.**

The requirements for the following components differ from permeable pavement facilities and the design criteria for these components are provided below.

- Contributing area
- Aggregate subbase
- Subgrade
- Subsurface check dams
- Overflow

Note that, unlike permeable pavement facilities, observation ports are not required, flow entrances, presettling and underdrains are not applicable, and the aggregate is referred to aggregate subbase instead of storage reservoir.

The structural design of permeable pavement to support anticipated loads is outside the scope of this manual.

The Puget Sound LID Manual provides additional guidance on permeable pavement design.

## Contributing Area

Permeable pavement surfaces shall not be designed to receive significant runoff from other areas (run-on). In no case may the surface receive run-on from an impervious area greater than 10 percent of the permeable pavement area. Any run-on shall be dispersed. To prevent sediment flowing onto the pavement, run-on shall not occur from erodible/unstabilized areas or from impervious areas that receive run-on from unstabilized areas.

## Aggregate Subbase

Stormwater passes through the wearing and leveling courses to an underlying aggregate subbase where it is filtered and stored prior to infiltration into the underlying soil. This aggregate also serves as the pavement's support base and shall be sufficiently thick to support the expected loads. Design of the subgrade for loading is outside of the scope of this manual. A licensed engineer is needed to determine subsoil load bearing, minimum aggregate base thickness, and aggregate compaction for loading.

Minimum requirements associated with the aggregate subbase design include the following:

- A 3-inch minimum depth of aggregate subbase is required. Note that more depth may be needed for constructability and placement of the subbase material (due to size of rock in the subbase) and for structural design support.
- The aggregate base shall have a minimum total void volume of 25 percent after compacted in place. Percent voids (porosity) shall be determined in accordance with ASTM C29/C29M. Use the jigging procedure to densify the sample (do not use the shoveling procedure).
- Aggregate material shall have 0-2 percent passing #200 wet sieve.
- For walkways, the following aggregate materials are recommended and meet the requirements listed above:
    - City of Seattle Mineral Aggregate Type 24
    - Modified AASHTO #57 per WSDOT 2014 Section 9-03.1(4)C with 0-2 percent passing #200 wet sieve; percent fracture shall be in accordance with requirements per WSDOT 2014 9-03.9(2).
- For vehicular applications, the following aggregate materials are recommended and meet the requirements listed above:
    - City of Seattle Mineral Aggregate Type 13
    - Modified AASHTO #57 per WSDOT 2014 Section 9-03.1(4)C with 0–2 percent passing #200 wet sieve; percent fracture shall be in accordance with requirements per WSDOT 2014 9-03.9(2).
    - Permeable ballast per WSDOT 2014 Section 9-03.9(2)

### Subgrade

The minimum measured subgrade infiltration rate for permeable pavement surfaces is 0.3 inches per hour. Note that infiltration testing is not required to use permeable pavement surfaces to meet the On-site List Approach, but may be used to demonstrate infeasibility (i.e., infiltration rates less than 0.3 inches per hour). If permeable pavement surfaces are to be used to meet the water quality treatment requirement, underlying soil shall meet the treatment soil requirements outlined in *Section 4.5.2* or a water quality treatment course shall be included.

During construction the subgrade soil surface can become smeared and sealed by excavation equipment. The design shall require scarification or raking of the side walls and bottom of the facility excavation to a minimum depth of 4 inches after excavation to restore infiltration rate.

### Subsurface Check Dams

Sloped facilities have an increased potential for lateral flows through the aggregate subbase along the top of the relatively impermeable subgrade soil. This poses a risk of subsurface erosion and reduces the storage and infiltration capacity of the pavement surface. If required depending upon slope, the subgrade must be designed to create subsurface ponding to detain subsurface flow, increase infiltration, and reduce structural problems associated with subgrade erosion on slopes (refer to Figure 5.16 in *Section 5.4.6)*. In such cases, ponding shall be provided using periodic lateral subsurface barriers (e.g., check dams) oriented perpendicular to the subgrade slope. While the frequency of the check dams is calculated based on the required subsurface ponding depth and the subgrade slope, typical designs include barriers at least every 3 inches of grade loss.

Minimum requirements associated with lateral subsurface barriers include the following:

- Permeable pavement surfaces with subgrade slopes greater than 5 percent shall include subsurface check dams to reduce structural problems associated with subgrade erosion on slopes, unless a geotechnical evaluation of subgrade soils shows that check dams are unnecessary for erosion control.
- Subsurface check dams shall be impermeable and restrict lateral flow along the top of the subgrade soil.
- The check dams shall not extend to the elevation of the surrounding ground.

## *5.6.2.6. BMP Sizing*

### Sizing for On-site List Approach

Permeable pavement surfaces may be selected to meet the On-site List Requirement (refer to *Section 3.3.1* and *Appendix C* for infeasibility criteria). The area of permeable pavement surface meets the requirement.

## Pre-sized Approach for Flow Control

The Pre-sized Approach may be used for projects with new and replaced hard surface areas up to 10,000 square feet. Under the Pre-sized Approach (refer to *Section 4.1.2*), pre-sized permeable pavement surfaces receive credits toward meeting the Pre-developed Pasture and Peak Control Standards. Credits for permeable pavement surfaces are provided in Table 5.34, organized by performance standard and subgrade slope. These credits can be applied to reduce the hard surface area requiring flow control. If partial credit (less than 100 percent) is received, the standard is not completely achieved and additional measures will be required. As an example, for a site subject to the Pre-developed Pasture Standard, a permeable pavement surface on subgrade with a slope between 2 and 6 percent would receive a XX percent credit. Therefore, XX percent of the permeable pavement surface can be excluded from drainage calculations. The impervious area (the area used to size the downstream flow control facility) would be calculated as XX percent of the permeable pavement surface area.

**Table 5.34. Credits for Permeable Pavement Surfaces without Check Dams.**

| Subgrade Slope | Credit (%) | | |
|---|---|---|---|
| | Pre-developed Pasture Standard | Peak Control Standard | Water Quality Treatment Standard[a] |
| Up to 2% | TBD | TBD | TBD |
| 2 to 6% | TBD | TBD | TBD |

Impervious Area Managed = Permeable Pavement Surface Area x Credit (%)/100.

[a] Pre-sized Approach may be used to meet basic water quality treatment. Enhanced water quality treatment may be achieved if soil suitability criteria are met (refer to *Section 4.5.2*).

To use these flow control credits to meet flow control standards, the BMP shall meet the general requirements for permeable pavement surfaces outlined in this section plus the following specific requirements:

- The aggregate subbase shall be at least 3 inches in depth.
- Subgrade slope shall be as specified in the table.
- To meet water quality treatment, the underlying soil shall meet the treatment soil requirements outlined in *Section 4.5.2* or a water quality treatment course shall be used.
- No underdrain or impermeable liner may be used.

For subgrade slopes between 2 and 6 percent flow control performance is lower. For improved performance, the surface may be designed as a permeable pavement facility with subsurface ponding and/or increased aggregate subbase depth. In this case, the surface shall be evaluated as a permeable pavement facility (refer to *Section 5.4.6*).

Alternatively, the performance of permeable pavement surfaces can be evaluated using a continuous simulation hydrologic model as described below.

### Modeling Approach for On-site Performance Standard, Flow Control, and Water Quality Treatment

The approved continuous simulation hydrologic modeling methods for permeable pavement surfaces vary as shown in Table 5.35. Depending upon the slope of the underlying subgrade and whether or not the aggregate subbase is below the surrounding grade, surfaces may be modeled explicitly (refer to Table 5.36) or with a land cover approximation (refer to Table 5.37).

For flat and low slope permeable pavement surface installations (0 to 2 percent) with subgrade below the surrounding grade, the aggregate subbase depth may be iteratively sized until the performance standard(s) are met. For other scenarios, partial credit towards meeting standards can be achieved and runoff from the pavement area can be routed to a downstream BMP.

### *5.6.2.7. Minimum Construction Requirements*

The construction specifications and criteria for permeable pavement surfaces are the same as those presented for permeable pavement facilities (refer to *Section 5.4.6.7*).

### *5.6.2.8. Operations and Maintenance Requirements*

Permeable pavement O&M requirements are the same as those presented for permeable pavement facilities in *Appendix G (BMP No. 25)*.

**Table 5.35. Modeling Methods for Permeable Pavement Surfaces.**

| Subbase | Wearing Course | Subgrade Slope | Modeling Representation | Performance |
|---|---|---|---|---|
| Subbase below (or partially below) the surrounding grade | Any | 0–2% | Model subbase storage and infiltration into underlying soil explicitly. The aggregate subbase depth should be set at the depth of the aggregate below the surrounding grade. Refer to Table 5.36. | The aggregate subbase depth may be sized to meet performance standards |
| | | | Represent surface with land cover approximation. Refer to Table 5.37. | Partial credit towards performance standard may be achieved |
| | | > 2% | Model subbase storage and infiltration into underlying soil explicitly with nominal ponding depth of 1/2-inch. Refer to Table 5.36. | Partial credit towards performance standard may be achieved. To fully meet performance standards on sloped subgrade, use permeable pavement facility (refer to *Section 5.4.6*). |
| | | | Represent surface with land cover approximation. Refer to Table 5.37. | |
| Subbase above surrounding grade | Porous Asphalt or Pervious Concrete | Any | Represent surface with land cover approximation. Refer to Table 5.37. | Partial credit towards performance standard may be achieved |
| | Grid System | Any | Represent surface with land cover approximation. Refer to Table 5.37. | Partial credit towards performance standard may be achieved |
| | Interlocking Paver | Any | Represent surface with land cover approximation. Refer to Table 5.37. | Partial credit towards performance standard may be achieved |

**Table 5.36. Continuous Modeling Assumptions for Permeable Pavement Surface (Explicit Representation).**

| Variable | Assumption |
|---|---|
| Precipitation Series | Seattle 158-year, 5-minute series[a] |
| Computational Time Step | 5 minutes. |
| Permeable Pavement Surface | Option 1: The selected model may have a routine specifically developed for permeable pavement that simulates precipitation falling on the pavement, infiltration through the pavement section, storage in the aggregate beneath the pavement, and infiltration into the underlying soil.<br>Option 2: If a permeable pavement routine is not available, represent the permeable pavement area as an impervious basin with runoff routed to a gravel-filled trench (of the same size as the permeable pavement area) with infiltration to underlying soil.<br>See Table 5.26 "Permeable Pavement Facility and Contributing Area" row for guidance on modeling run-on from other contributing drainage areas. Additional areas draining to permeable pavement surfaces are limited to 10 percent of the permeable pavement area. |
| Precipitation Applied to Surface | If using Option 1, precipitation is applied to the pavement area.<br>If using Option 2, do not apply precipitation to the trench bed because precipitation is already applied to basin before routing to trench |
| Evaporation Applied to Surface | If using Option 1, evaporation is applied to the pavement area.<br>If using Option 2, evaporation is applied to the impervious basin before routing to the trench. |
| Aggregate Subbase Depth | When the subgrade slope is 0 to 2 percent, use the depth of the aggregate subbase below surrounding grade.<br>When the subgrade slope exceeds 2 percent, use a nominal depth of ½-inch. |
| Aggregate Subbase Porosity | Assume maximum 25 percent unless test is provided showing higher porosity (up to 35 percent) for aggregate compacted and in place. |
| Subgrade Soil Design Infiltration Rate | Design infiltration rate (*Section 4.5.2*, *Appendix D*). |
| Infiltration Across Wetted Surface Area | No (infiltration on bottom area only) |
| Outlet Structure | Unless the selected model represents surface sheet flow when pavement section is saturated, the overflow can be simulated as overtopping an overflow riser. Overflow riser elevation is set at average maximum subsurface ponding depth. Flow may be modeled as weir flow over riser edge. Freeboard modeled within the storage reservoir shall be sufficient to allow the water surface elevation to rise above the weir or overflow pipe elevation to provide head for discharge. |

**Table 5.37. Continuous Modeling Assumptions for Permeable Pavement Surface (Land Cover Approximation).**

| Variable | Assumption |
|---|---|
| Precipitation Series | Seattle 158-year, 5-minute series |
| Computational Time Step | 5 minutes.[a] |
| Basin | Model surface area as land cover approximation :<br>Porous Asphalt or Pervious Concrete: lawn on underlying soil type (till or outwash)<br>Grid System: lawn on underlying soil type (till or outwash)<br>Interlocking Paver: 50% lawn on underlying soil type (till or outwash) and 50% impervious |

## 5.7. Detention BMPs

Detention facilities provide for the temporary storage of stormwater runoff. Stormwater is then released through a control structure at an attenuated rate to meet flow control performance standards. The BMPs in this section include:

- Detention ponds
- Detention pipes
- Detention vaults
- Detention cisterns
- Other detention options

## 5.7.1. Detention Ponds

### 5.7.1.1. Description

Detention ponds are basins that temporarily store runoff and control release rates. Detention ponds may be designed to drain completely between storm events, or designed as a combination water quality treatment and flow control facility. The combination of water quality treatment and flow control functions is summarized in *Section 5.8.9*.

### 5.7.1.2. Performance Mechanisms

Detention ponds provide peak flow attenuation by slowly releasing low flows through an outlet control structure.

### 5.7.1.3. Applicability

Detention ponds can be applied to meet or partially meet the requirements listed below.

| BMP | On-site | | Flow Control | | | Water Quality | | | | Conveyance |
|---|---|---|---|---|---|---|---|---|---|---|
| | List | Standard | Forest | Pasture | Peak | Basic | Enhanced | Oil Control | Phosphorus | |
| Detention Pond | | ✓[a] | ✓ | ✓ | ✓ | | | | | ✓ |

[a] Standard may be partially achieved for smaller contributing areas.

### 5.7.1.4. Site Considerations

Detention ponds require a large amount of area. In addition to the area required for the pond, maintenance access shall be provided, which can affect the footprint of the pond and in part determine whether they are feasible for a particular site. In a highly developed area like the City of Seattle, large open ponds are somewhat uncommon.

Setback requirements for detention ponds are intended to protect neighboring properties from flooding and protect receiving waters and critical areas from water quality impacts. Refer to Volume V of the SWMMWW for detention pond setback requirements. The following additional setback requirements also apply to detention ponds installed within the City limits:

- A minimum 5-foot setback is required from the toe of the exterior slope to the property line.
- A minimum 5-foot setback is required from the emergency overflow water surface to the property line.
- Geotechnical analysis is required for facilities within 20 feet of any structure or property line or within 50 feet up-slope of a structure when the slope between the top of the pond and the structure is greater than 15 percent.

### *5.7.1.5. Design Criteria*

The design criteria in this section are for detention ponds. However, many of the criteria also apply to infiltration basins (*Section 5.4.8*), as well as wet ponds and combined detention/wet pools (*Section 5.8.9*).

The following provides a description and requirements for the components of detention ponds. Some or all of the components may be used for a given application depending on the site characteristics and restrictions, pollutant loading, and design objectives. Design criteria are provided in this section or in Volume III of the SWMMWW for the following elements:

| Design Element | SWMMWW Design Criteria | Seattle-specific Design Criteria |
|---|---|---|
| Detention pond geometry | ✓ | ✓ |
| Access to cells for maintenance | ✓ | ✓ |
| Fencing | ✓ | ✓ |
| Embankments and failure analysis | ✓ | ✓ |
| Dam safety | ✓ | ✓ |
| Vegetation and landscaping | ✓ | ✓ |
| Design and construction of access roads | ✓ | |
| Overflow | ✓ | |
| Emergency overflow spillway | ✓ | |

Refer to Detention Ponds in Volume III of the SWMMWW for specific detention pond design criteria. The City's design criteria for specific design elements are summarized below.

#### Detention Pond Geometry

Refer to Detention Ponds in Volume III of the SWMMWW for detention pond design considerations. The following additional requirements shall be followed for detention ponds installed in Seattle:

- Vertical retaining walls and fencing shall be used for areas of the pond designed for sediment removal by vactor.
- Any pond cell allowing or requiring entry for maintenance, including vegetation maintenance, shall have a section of interior side slopes of 4H:1V for safe egress.

#### Access to Cells for Maintenance

Refer to Detention Ponds in Volume III of the SWMMWW for access design considerations. The following additional requirement shall be followed for detention ponds installed in Seattle:

- An access plan is required for sediment removal from all cells. Early conversation with SPU is encouraged and Director's approval is required.

#### Fencing

Refer to Detention Ponds in Volume III of the SWMMWW for fencing considerations. Fencing requirements will depend on the specific site and possibly on land use requirements. Early

conversation with SPU and DPD about Safety and Public Access is encouraged and Director's approval is required. Fencing and gates will be evaluated as part of planning for access for maintenance in addition to public access or exclusion planning.

### Embankments and Failure Analysis

Refer to Detention Ponds in Volume III of the SWMMWW for embankment design requirements. The following additional requirements shall be followed for detention ponds installed in Seattle:

- If an embankment is proposed to impound water, early conversations with SPU and DPD are encouraged and Director's approval is required. Impoundment of a water volume exceeding 10-acre-feet is considered a dam and is regulated by Ecology.
- A failure analysis describing impacts of embankment failure shall be provided.

### Dam Safety

Refer to Detention Ponds in Volume III of the SWMMWW for dam safety requirements. The following additional requirement shall be followed for detention ponds installed in Seattle:

- Detention facilities that can impound 10-acre-feet or more with the water level at the embankment crest shall meet the state's dam safety requirements, even if water storage is intermittent and infrequent (WAC 173-175-020(1)).

Ecology contact information and electronic versions of the guidance documents in PDF format are available on the Ecology website at (www.ecy.wa.gov/programs/wr/dams/dss.html).

### Vegetation and Landscaping

Refer to Detention Ponds in Volume III of the SWMMWW for vegetation and landscaping requirements. The following additional requirements shall be followed for detention ponds installed in Seattle:

- A plan for landscape establishment is required. Consider installation of a hose bib and water service for watering.
- All planted slopes shall be accessible for vegetation maintenance.
- Use of ornamental plantings in the vicinity of a detention pond are discouraged and may not be allowed to due concerns regarding seed transport.

### *5.7.1.6. BMP Sizing*

Refer to Detention Ponds in Volume III of the SWMMWW for BMP Sizing considerations.

### *5.7.1.7. Minimum Construction Requirements*

The following construction requirements should be considered during construction of a detention pond:

- Detention ponds may be used for sediment control during site construction, but sediment shall be removed upon completion.
- Exposed earth on the pond bottom and interior side slopes shall be vegetated or seeded with an appropriate seed mixture.

#### *5.7.1.8. Operations and Maintenance Requirements*

Detention pond O&M requirements are provided in *Appendix G (BMP No. 1)*.

## 5.7.2. Detention Pipes

### 5.7.2.1. Description

Detention pipes are underground storage facilities for stormwater. Detention pipes can be combined with rainwater harvesting (refer to *Section 5.5.1*).

### 5.7.2.2. Performance Mechanisms

Detention pipes provide peak flow attenuation by slowly releasing low flows through an orifice.

### 5.7.2.3. Applicability

Detention pipes can be applied to meet or partially meet the requirements listed below.

| BMP | On-site | | Flow Control | | | Water Quality | | | | Conveyance |
|---|---|---|---|---|---|---|---|---|---|---|
| | List | Standard | Forest | Pasture | Peak | Basic | Enhanced | Oil Control | Phosphorus | |
| Detention Pipe | | ✓[a] | ✓[b] | ✓[b] | ✓[b] | | | | | ✓ |

[a] Standard may be partially achieved for smaller contributing areas.

[b] Standard may be partially or completely achieved depending upon contributing area and minimum orifice size.

### 5.7.2.4. Site Considerations

The primary site considerations for detention pipes include conflicts with existing underground utilities. While there are no specific setback requirements for detention pipes, detention pipe location and pipe material approval is required and may require geotechnical analysis.

Grading and drainage collection on the site are important site considerations that can impact flow control effectiveness. Special care may be necessary, particularly with roadway projects, to match BMP sizing to actual runoff collected and conveyed to the facility.

### 5.7.2.5. Design Criteria

The following provides a description and requirements for the components of detention pipes. Some or all of the components may be used for a given application depending on the site characteristics and restrictions and design objectives. Design criteria are provided in this section for the following elements:

- Materials
- Pipe bedding
- Structural stability
- Access

Typical design requirements for detention pipes are shown in City of Seattle Standard Plans No. 270 through 272 and provided in the City of Seattle Side Sewer Directors' Rule which can be found on DPD's website (www.seattle.gov/dpd). Flow control structure details are shown in *Appendix E*.

## Detention Pipe Materials and Specifications

The material, diameter, and specification of the detention pipe shall be indicated on the Side Sewer Permit application, required before installing the drainage facility. Table 5.38 below shows pipe materials and bedding that are approved for detention pipes installed in Seattle.

### *Pipe Bedding*

The City has developed the following requirements for pipe bedding:

- All detention pipe bedding installed on public property shall be per the City of Seattle Standard Specifications for Road, Bridge and Municipal Construction.
- All detention pipe bedding installed on private property shall comply with the bedding requirements provided in Table 5.38.

## Structural Stability

The following structural requirements apply to detention pipes:

- Detention pipes shall meet structural requirements for overburden support, buoyancy, and traffic loading as appropriate.
- When a detention pipe is located under a building, provide a load analysis. The pipe shall not be located under the foundation or have pressure exerted on it by the foundation. In moderately pervious soils where seasonal groundwater may induce flotation, buoyancy tendencies shall be balanced either by ballasting with backfill or concrete backfill, providing concrete anchors, or increasing the total weight.
- When corrugated metal pipe is selected, end plates shall be designed for structural stability at maximum hydrostatic loading. Flat end plates generally require thicker gage material than the pipe and/or require reinforcing ribs. Corrugated metal pipe is not allowed for use in the right-of-way, critical areas, geologic hazard areas, or underneath buildings.
- Detention pipes shall be placed on a stable, well consolidated foundation, have suitable bedding, and shall follow City of Seattle Standard Specifications for Road, Bridge, and Municipal Construction.
- Detention pipes shall not be placed in fill slopes, unless a geotechnical analysis is provided for stability and constructability.

**Table 5.38. Detention Pipe Material and Bedding Specifications**

| Pipe Material | Pipe Size and Testing Method Specification | City of Seattle Standard Specification | Pipe Bedding | ROW Applications[a] | Buildover or Landslide-prone Area Applications[a] | Private Site Applications[b] |
|---|---|---|---|---|---|---|
| Ductile Iron Pipe (DIP) | ANSI A21.51 Class 50 or AWWA C151 (minimum) | 9-05.2 | Mineral Aggregate Type 9, Class B | Yes | Yes | Yes |
| Reinforced Concrete Pipe (RCP) | 18-inch or larger diameter, ASTM C 76 Class III | 9-05.1 (1) | Mineral Aggregate Type 9, Class B | Yes | Yes | Yes |
| Polypropylene Pipe for Detention (PP) | 30-inch through 60-inch, ASTM F2764 | 9-05.17 | Mineral Aggregate Type 22, Class B | Yes | Yes | Yes |
| Steel Reinforced Polyethylene Pipe for Detention | NA | NA | Class B Bedding per 7-17.3(1)B3 | Yes | Yes | Yes |
| Corrugated Polyethylene (PE) Drain Pipe | Minimum 12-inch diameter, maximum 60-inch diameter, AASHTO M 294, Type S | 9-05.7 (5) | Mineral Aggregate Type 22, Class B | Yes | No | Yes |
| Steel Pipe for Detention | AASHTO M 36 Type I | 9-05.7(5) | Class D Bedding per 7-17.3(1)B2.4 | No | No | Yes |
| Aluminum Pipe for Detention | AASHTO M 196 Type I | 9-05.6(4) | Class D Bedding per 7-17.3(1)B2.4 | No | No | Yes |

[a] Refer to City of Seattle Standard Plan 270

[b] Refer to City of Seattle Directors' Rule 4-2011/2011-004

### Access

Within the right-of-way, access shall be provided as shown on City of Seattle Standard Plan No. 270. Truck access is required at each maintenance hole location.

Detention pipes on a parcel have an option to follow City of Seattle Standard Plan No. 270 or, when using corrugated metal pipe, City of Seattle Standard Plan No. 271. In addition, the following access requirements apply:

- All detention pipe openings and flow control structures shall be readily accessible for maintenance personnel, maintenance vehicles and City of Seattle inspection personnel.
- All detention pipes more than 50 feet long and all detention pipes in the right-of-way shall provide an upstream maintenance hole. Detention pipes less than 50 feet long on private property may substitute a cleanout for the maintenance hole at the upstream end.

## *5.7.2.6. BMP Sizing*

### Pre-sized Approach for Flow Control

The Pre-sized Approach may be used for projects with new and replaced hard surface areas up to 10,000 square feet. Under the Pre-sized Approach (refer to *Section 4.1.2*), pre-sized detention pipes may be used to achieve Pre-developed Pasture and Peak Control Standards. Sizing factors for detention pipe receiving runoff from a hard surface are provided in Table 5.39. Sizing factors are organized by pipe diameter, contributing area, and flow control standard. To use these sizing factors to meet flow control standards, the facility shall meet the general requirements for detention pipes outlined in this section plus the following specific requirements:

- Sizing equations are applicable for contributing impervious surface areas between 2,000 and 10,000 square feet.
- Pipe length shall be sized using the applicable sizing equation.
- The low flow orifice diameter shall be 0.5 inches.
- Detention pipe shall be the designated diameter (24 or 36 inches). For intermediate diameters (between 24 and 36 inches), the pipe length may be linearly interpolated.
- The entire volume of the pipe shall be available for storage (overflow riser shall be set equal to the crown of the pipe).

The pipe length is calculated as a function of the hard surface area routed to it. As an example, for the Pre-developed Pasture Standard, the pipe length for a 24-inch diameter pipe receiving runoff from between 5,000 to 10,000 square feet of hard surface would be calculated as: 0.120 x hard surface area (square feet) - 235 feet. All area values shall be in square feet and length values shall be in feet.

Alternatively, detention pipes for small sites can be sized using a continuous model as described in the subsequent section.

**Table 5.39. Sizing Equations for Detention Pipe.**

| Detention Pipe Diameter[a] | Contributing Area | Sizing Equation for Pipe Length | |
|---|---|---|---|
| | | Pre-developed Pasture Standard | Peak Control Standard |
| 24 inches | 2,000 – 5,000 sf | TBD | TBD |
| | 5,000 – 10,000 sf | TBD | TBD |
| 36 inches | 2,000 – 5,000 sf | TBD | TBD |
| | 5,000 – 10,000 sf | TBD | TBD |

A – contributing hard surface area; ft – feet; sf – square feet.

For A < 5,000 sf: Pipe Length (ft) = Factor x [A (sf)^Integer].
Hard Surface Area Managed (sf) = [Pipe Length (ft) ÷ Factor]^(1 ÷ Integer).

For A 5,000 to 10,000 sf: Pipe Length (ft) = [Factor x A (sf)] -Integer.
Hard Surface Area Managed (sf) = [Pipe Length (ft)+Integer]÷ Factor.

[a] Detention pipe diameter refers to live storage depth (i.e., does not include freeboard or sediment storage requirements).

## Modeling Approach for On-site Performance Standard and Flow Control

When using the continuous runoff model for pipe sizing, the assumptions listed in Table 5.40 shall be applied. It is recommended that pipes be modeled as horizontal cylinders with an outlet structure that includes a low flow orifice. The contributing area, pipe diameter, pipe length and orifice configuration should be iteratively sized until the Minimum Requirements for Flow Control are met (refer to *Volume 1, Section 5.3*).

In some instances, the minimum diameter for the low flow orifice (0.5-inch for underground detention and 0.25-inch for aboveground detention) will be too large to meet standard release rates, even with minimal head (refer to *Section 5.7.2.3 Applicability*). Designers should iteratively increase detention area and decrease live storage depth until the performance criteria are met. However, live storage depth should not be reduced to less than 3 feet in an attempt to meet the flow control standards.

**Table 5.40. Continuous Modeling Assumptions for Detention Pipe.**

| Variable | Assumption |
|---|---|
| Precipitation Series | Seattle 158-year, 5-minute series |
| Computational Time Step | 5-minutes |
| Inflows to Facility | Surface flow and interflow from total drainage area (including impervious and pervious contributing areas) be connected to facility. |
| Precipitation and Evaporation Applied to Facility | No |
| Infiltration | No |
| Total Depth | The total depth is the pipe diameter (i.e., live storage depth). |
| Outlet Structure | Low flow orifice, riser height and diameter |
| Low Flow Orifice | Minimum diameter of 0.5 inches, set 1 foot below the pipe invert. |

#### 5.7.2.7. Minimum Construction Requirements

Construction requirements are as follows:

- Place at least 4 inches of bedding under the pipe. The bedding shall fill the trench to a point half-way up the sides of the pipe (to the "spring line").
- Provide at least 2 feet of cover over a detention pipe. For single family and duplex residences, 18 inches of cover is allowable. Before a side sewer permit is signed-off as completed, a City inspector shall approve the installed system, including the detention pipe and the flow control structure, after it is bedded but before it is covered with soil.
- The standard slope for detention pipes is 0.5 percent. The inlet pipe to the detention pipe and the outlet pipe from the flow control structure shall have at least a 2 percent slope, the same as required for other service drain pipes.
- Field changes to the flow control device assembly, including elevation changes, require submittal to the Engineer of Record for confirmation that the device still meets the design requirements.

#### 5.7.2.8. Operations and Maintenance Requirements

Detention pipe O&M requirements are provided in *Appendix G (BMP No. 3)*.

## 5.7.3. Detention Vaults

### 5.7.3.1. Description

Detention vaults are underground storage facilities for stormwater. Detention vaults can be combined with rainwater harvesting (refer to *Section 5.5.1*).

### 5.7.3.2. Performance Mechanisms

Detention vaults provide peak flow attenuation by slowly releasing low flows through an orifice.

### 5.7.3.3. Applicability

Detention vaults can be applied to meet or partially meet the requirements listed below.

| BMP | On-site | | Flow Control | | | Water Quality | | | | Conveyance |
|---|---|---|---|---|---|---|---|---|---|---|
| | List | Standard | Forest | Pasture | Peak | Basic | Enhanced | Oil Control | Phosphorus | |
| Detention Vault | | ✓[a] | ✓[b] | ✓[b] | ✓[b] | | | | | ✓ |

[a] Standard may be partially achieved for smaller contributing areas.

[b] Standard may be partially or completely achieved depending upon contributing area and minimum orifice size.

### 5.7.3.4. Site Considerations

Detention vaults are typically shallower than detention pipes, since they can utilize a greater area. Primary site considerations for a detention vaults include providing sufficient access points for maintenance, incorporating the access requirements into a site, conflicts with existing underground utilities, and site setback requirements. While there are no specific setback requirements for detention vaults, detention vault location and vault material approval is required, and may require geotechnical analysis.

Grading and drainage collection on the site are important site considerations that can impact flow control effectiveness. Special care is necessary, particularly with roadway projects, to match BMP sizing to actual runoff collected and conveyed to the facility.

### 5.7.3.5. Design Criteria

The following provides a description and requirements for the components of detention vaults (Figure 5.21). Flow control structure details are outlined in *Appendix E*. Some or all of the components may be used for a given application depending on the site characteristics and restrictions, pollutant loading, and design objectives. Design criteria are provided in this section for the following elements:

- Materials
- Structural stability
- Access

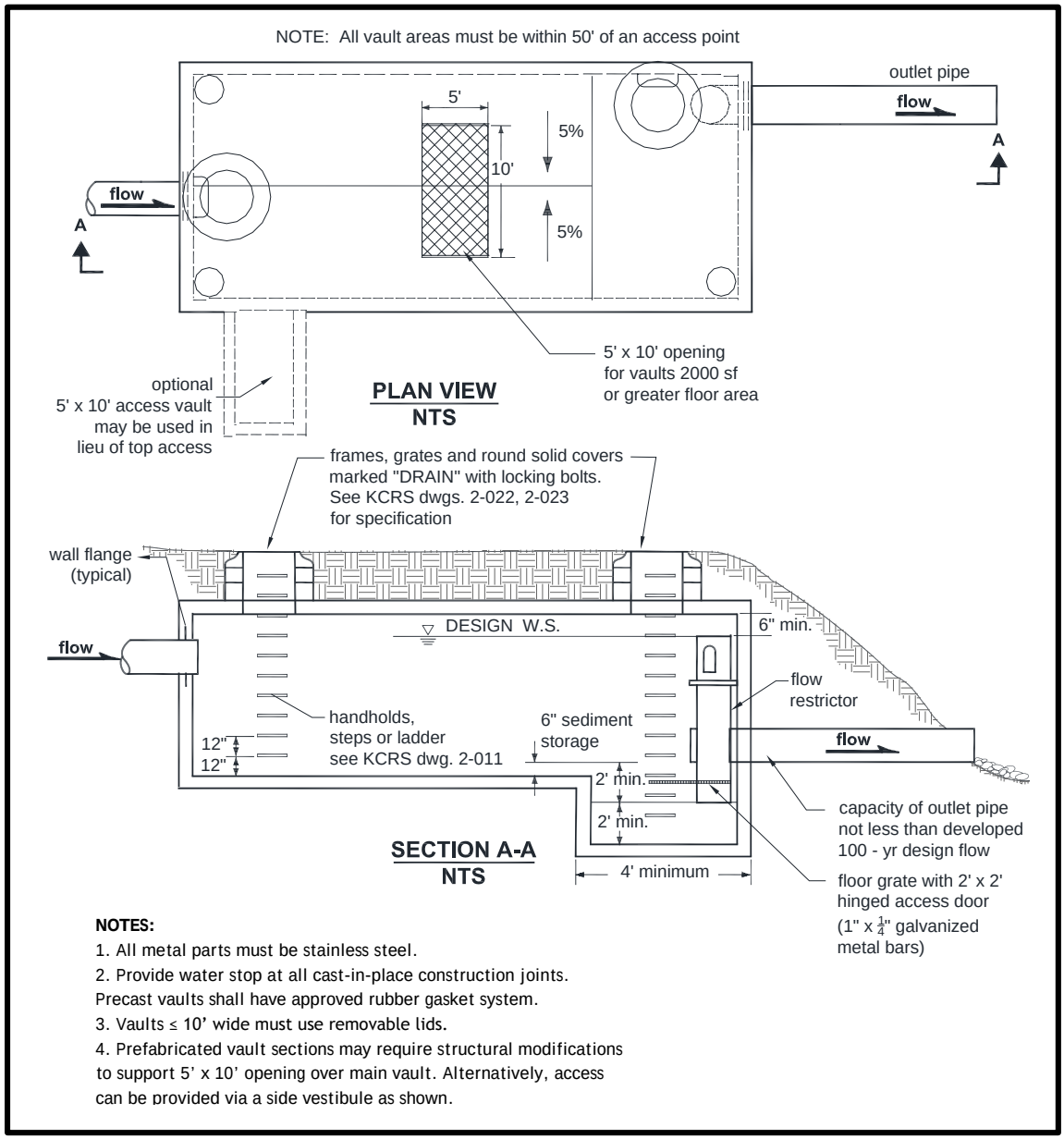


**Figure 5.21. Typical Detention Vault.**

Design criteria are summarized below for each of these design elements.

## Materials

Minimum 3,000 psi structural reinforced concrete shall be used for detention vaults. All construction joints shall be provided with water stops.

## Structural Stability

The following structural requirements apply to detention vaults:

- Detention vaults shall meet structural requirements for overburden support, buoyancy, and traffic loading as appropriate.
- Design of detention vaults shall be water tight.
- When detention vaults are incorporated into or underneath a building, they shall meet all structural requirements for the building or demonstrate no structural interaction, including no loading on the vault from the building foundation.
- Detention vaults shall be placed on a stable, well-consolidated foundation and bedding material.
- Detention vaults shall not be placed in fill slopes, unless a geotechnical analysis for stability and constructability is provided.

Detention pipe is preferred over detention vaults for the public drainage system. Early conversations with SPU are encouraged if considering installation of a detention vault in the right-of-way.

## Access

The following access requirements apply to detention vaults:

- Access shall be provided for visual inspection of the flow control structure and for cleaning the entire floor area of the detention vault. A plan for access, including maintenance equipment access is required.
- Access may be provided by use of removable panels, hatches, or ring and cover. For any detention vault requiring entry for maintenance, ladders shall be installed so that the egress path does not exceed 25 feet.
- All access shall be readily accessible by maintenance vehicles, including structures located under buildings.
- The maximum depth from finished grade to the detention vault invert is 17 feet.
- Access shall be provided over both the inlet pipe and outlet structure. Access openings shall be positioned a maximum of 50 feet from any location within the detention vault. Additional access points may be needed on large vaults. Vaults must be designed to slope at least 5 percent from each side towards the center, forming a broad “v” to facilitate sediment removal. If more than one “v” is provided in the vault floor to minimize vault depth, access to each “v” shall be provided.
- Internal structural walls of large vaults shall be provided with openings sufficient for maintenance access between cells. The openings shall be sized and situated to allow access to the maintenance “v” in the vault floor.

### *5.7.3.6. BMP Sizing*

#### Pre-sized Approach for Flow Control

The Pre-sized Approach may be used for projects with new and replaced hard surface areas up to 10,000 square feet. Under the Pre-sized Approach (refer to *Section 4.1.2*), pre-sized detention vaults may be used to achieve Pre-developed Pasture and Peak Control Standards. Sizing factors for rectangular detention vaults receiving runoff from a hard surfaces are provided in Table 5.41. Sizing factors are organized by detention depth, contributing area, and flow control standard. To use these sizing factors to meet flow control standards, the facility shall meet the general requirements for vaults outlined in this section plus the following specific requirements:

- Sizing equations are applicable for contributing impervious surface areas between 2,000 and 10,000 square feet.
- Vault area shall be sized using the applicable sizing equation.
- The low flow orifice diameter shall be 0.5 inches.
- Invert of overflow shall be set at the designated detention (i.e., live storage) depth (3 or 4 feet) above the invert of the low flow orifice. For intermediate depths (between 3 and 4 feet), the vault area may be linearly interpolated.
- The vault shall have vertical walls to the designated overflow height.

**Table 5.41. Sizing Equations for Detention Vaults.**

| Detention Depth[a] | Contributing Area | Sizing Equation for Vault Area | |
|---|---|---|---|
| | | Pre-developed Pasture Standard | Peak Control Standard |
| 3 feet | 2,000 – 5,000 sf | 0.0000428 x [A^1.87] | 0.0000616 x [A^1.77] |
| | 5,000 – 10,000 sf | [0.121 x A] – 255 | [0.0700 x A] – 130 |
| 4 feet | 2,000 – 5,000 sf | NA | 0.00000441 x [A^2.04] |
| | 5,000 – 10,000 sf | NA | [0.0508 x A] – 98.0 |

A – contributing hard surface area; NA- not applicable; sf- square feet.

For A < 5,000 sf: Vault Area (sf) = Factor x [A (sf)^Integer].

Hard Surface Area Managed (sf) = [Vault Area (sf) ÷ Factor]^(1 ÷ Integer).

For A 5,000 to 10,000 sf: Vault Area (sf) = [Factor x A (sf)] - Integer.

Hard Surface Area Managed (sf) = [Vault Area (sf)+ Integer] ÷ Factor.

[a] Detention depth refers to live storage depth (i.e., does not include freeboard or sediment storage requirements).

The vault area is calculated as a function of the hard area routed to it. As an example, for the Peak Control Standard, the area for a vault with an overflow invert set at 4.0 feet above the low flow orifice and receiving runoff from less than 5,000 square feet of hard surface would be calculated as: 0.00000441 x hard surface area (square feet) ^2.04. All area units shall be square feet.

A vault with 4 feet of head above the low flow orifice is not applicable for sites subject to the Pre-developed Pasture Standard because the head to meet this standard (refer to *Section 4.1.2*). To meet the Pre-developed Pasture Standard, a vault with 3 feet of live storage depth shall be used.

### Modeling Approach for On-site Performance Standard and Flow Control

When using the continuous runoff model for vault sizing, the assumptions listed in Table 5.42 shall be applied. It is recommended that vaults be modeled as a flat-bottomed detention vault or tank with an outlet structure that includes a low flow orifice. The contributing area, detention bottom area, overflow depth and orifice configuration should be iteratively sized until the Minimum Requirements for Flow Control are met (refer to *Volume 1, Section 5.3*).

**Table 5.42. Continuous Modeling Assumptions for Detention Vaults.**

| Variable | Assumption |
|---|---|
| Precipitation Series | Seattle 158-year, 5-minute series |
| Computational Time Step | 5-minutes |
| Inflows to Facility | Surface flow and interflow from total drainage area (including impervious and pervious contributing areas) connected to facility |
| Precipitation and Evaporation Applied to Facility | No |
| Infiltration | No |
| Total Depth | Vault height (including freeboard) above the vault bottom (does not include sediment storage) |
| Outlet Structure | Low flow orifice, riser height and diameter |
| Low Flow Orifice | Invert of low flow orifice set at a minimum of 6 inches above the bottom of the vault |

In some instances, the minimum diameter for the low flow orifice (0.5-inch) will be too large to meet standard release rates, even with minimal head (refer to *Section 5.7.3.3 – Applicability* ). Designers should iteratively increase detention area and decrease live storage depth until the performance criteria are met. However, live storage depth should not be reduced to less than 3 feet in an attempt to meet the flow control standards.

In these cases, the following design/modeling approach is recommended:

- A detention vessel should be sized with an orifice of minimum diameter and a 3-foot live storage depth such that there are no overflows during the 158-year period of record.

### *5.7.3.7. Minimum Construction Requirements*

Refer to the construction-related issues outlined above as part of the design criteria. Additional construction requirements are as follows:

- Conduct infiltration or exfiltration testing of the detention vault.
- Submit field changes to the flow control device assembly, including elevation changes, to the Engineer of Record for confirmation that the device still meets the design requirements.

### *5.7.3.8. Operations and Maintenance Requirements*

Detention vault O&M requirements are provided in *Appendix G (BMP No. 3)*.

## 5.7.4. Detention Cisterns

### 5.7.4.1. Description

Detention cisterns are tanks used for the capture and detention of stormwater runoff. Runoff from roof downspouts can be routed to cisterns for detention and slow release to an approved point of discharge. Like other detention facilities, cisterns can be used to achieve reductions in peak flows and flow durations.

Detention cisterns can be combined with rainwater harvesting (refer to *Section 5.5.1*).

### 5.7.4.2. Performance Mechanisms

Detention cisterns provide peak flow attenuation by slowly releasing low flows through an orifice. The flow control performance of a detention cistern is a function of contributing area, storage volume, cistern height, and orifice size.

### 5.7.4.3. Applicability

Detention cisterns can be applied to meet or partially meet the requirements listed below.

| BMP | On-site | | Flow Control | | | Water Quality | | | | Conveyance |
|---|---|---|---|---|---|---|---|---|---|---|
| | List | Standard | Forest | Pasture | Peak | Basic | Enhanced | Oil Control | Phosphorus | |
| Detention Cistern | | ✓ | ✓[a] | ✓[a] | ✓ | | | | | ✓ |

[a] Standard may be partially or completely achieved depending upon contributing area and minimum orifice size.

### 5.7.4.4. Site Considerations

Detention cisterns can be used to detain rooftop runoff in any type of new or retrofit development project. Cisterns may be used individually or connected to each other in series for greater detention and storage capacity. Detained stormwater and system overflows may be conveyed to an approved point of discharge or to another BMP such as bioretention.

### 5.7.4.5. Design Criteria

The following provides recommendations and requirements for the common components of cistern detention systems. A schematic for a typical detention cistern in shown in Figure 5.22. Design criteria are provided in this section for the following elements:

- Contributing area
- Collection system
- Screen/debris excluder
- Cistern

- Flow control orifice
- Overflow

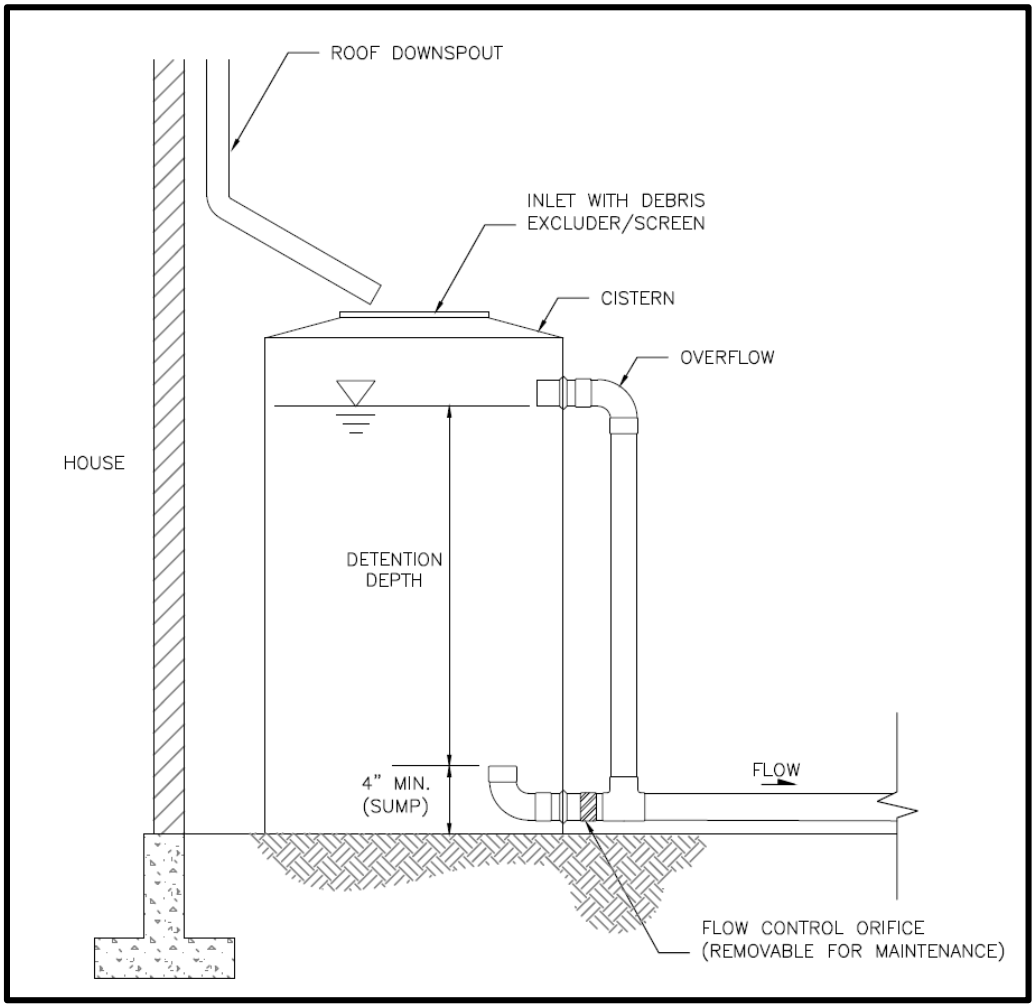


**Figure 5.22. Detention Cistern.**

## Contributing Area

The area contributing runoff to a detention cistern shall not be pollution generating (e.g., surfaces subject to vehicular traffic are not acceptable).

To protect the water quality of the rainwater harvested, avoid collecting runoff from roof surfaces comprised of materials such as copper or zinc that may release contaminants into your system. Also avoid collecting runoff from roof materials treated with fungicides or herbicides.

## Collection System

Collection systems include gutters and downspouts, as well as piping and any other conveyance needed to route runoff from the roof to the cistern.

### Screens/Debris Excluder

A filter screen or other debris barrier is required to prevent insects, leaves, and other larger debris from entering the system. A self-cleaning inlet filter is recommended.

### Cistern

Cisterns are commonly constructed of fiberglass, polyethylene, concrete, metal, or wood. Tanks can be installed at or below grade, and individually or in series.

Minimum requirements associated with cistern design include the following:

- If cistern height exceeds 4.5 feet (excluding piping), cistern width exceeds 4 feet, or storage volume exceeds 600 gallons, the cistern may be subject to stricter Land Use Code (SMC Title 23) setback requirements.
- All cisterns shall be installed in accordance with manufacturer's installation instructions.
- Cisterns shall be designed to prevent mosquitoes and other nuisance insects and animals from entering the cistern system. This can be done with tight-fitting covers and appropriate screening at all openings to the cistern.
- Opaque containers shall be used for aboveground cisterns to prevent penetration of sunlight to minimize algal growth.
- Minimum cistern size shall be that of a rain barrel (typically 55 gallons).

### Flow Control Orifice

Minimum requirements associated with flow control orifice design include the following:

- As with other detention systems, the minimum diameter shall be 0.25 inches for orifices located above ground, and 0.5 inches for orifices located underground. (Note: belowground facilities are not permitted for single-family residential sites unless approved by the Director.)
- Minimum 4 inch sump shall be provided to protect the orifice from sediment.

### Overflow

Cisterns shall have an overflow to convey water exceeding the detention capacity of the system to an approved point of discharge or another BMP (e.g., bioretention area, vegetated cell, or infiltration trench) per *Section 4.3.4*. Conveyance may be provided by gravity flow or by pumps, but gravity flow is preferred.

## *5.7.4.6. BMP Sizing*

### Pre-sized Approach for Flow Control

The Pre-sized Approach may be used for projects with new and replaced hard surface areas up to 10,000 square feet. Under the Pre-sized Approach (refer to *Section 4.1.2*), pre-sized detention cisterns may be used to achieve Pre-developed Pasture and Peak Control Standards.

Sizing factors for aboveground cisterns receiving runoff from a hard surface are provided in Table 5.43. Factors are organized by flow control standard, cistern overflow depth and contributing area. To use these sizing factors to meet flow control standards, the facility shall meet the general requirements for cisterns outlined in this section plus the following specific requirements:

- The cistern area shall be sized using the applicable sizing equation.
- The flow control orifice diameter shall be 0.25 inches.
- The invert of the overflow shall be set at the designated detention (i.e., live storage) depth (3 or 4 feet) above the invert of the flow control orifice. For intermediate depths (between 3 and 4 feet), the cistern area may be linearly interpolated.
- The cistern shall have vertical walls to the designated overflow height.

**Table 5.43. Sizing Equations for Aboveground Detention Cisterns.**

| Detention Depth[a] | Contributing Area | Sizing Equation for Cistern Area | |
|---|---|---|---|
| | | Pre-developed Pasture Standard | Peak Control Standard |
| 3 feet | < 6,140 sf | TBD | TBD |
| | 6,140 – 8,000 sf | TBD | |
| | 8,000 – 10,000 sf | TBD | |
| 4 feet | < 10,000 sf | NA | TBD |

A – contributing hard surface area; NA – not applicable; sf – square feet.

Cistern Area (sf) = [Factor x A (sf)] - Integer or Factor x [A (sf)^Integer].

Hard Surface Area Managed (sf) = [Cistern Area (sf) + Integer] ÷ Factor or [Cistern Area (sf) ÷ Factor]^(1 ÷ Integer).

[a] Detention depth refers to live storage depth (i.e., does not include freeboard or sediment storage requirements).

The cistern bottom area is calculated as a function of the hard surface area routed to it. As an example, to meet the Pre-developed Pasture Standard, the area of a cistern with an overflow invert set at 3 feet above the flow control orifice and receiving runoff from less than 6,140 square feet would be calculated as: TBD x contributing hard surface area (square feet) ^TBD. All areas values shall be in units of square feet. For the same cistern receiving runoff from between 6,140 and 8,000 square feet, the cistern area would be TBD square feet.

A cistern with 4 feet of head above the flow control orifice is not applicable for sites subject to the Pre-developed Pasture Standard because the head is too large to meet this standard. To meet the Pre-developed Pasture Standard and use the Pre-sized Approach, a cistern with 3 feet of detention depth shall be used(refer to *Section 4.1.2*).

Alternatively, cisterns can be sized using a continuous model as described in the next section.

## Modeling Approach for On-site Performance Standard and Flow Control

Continuous modeling may be used to size detention cisterns using the procedures presented for detention vaults in *Section 5.7.3*. The assumptions provided in Table 5.42 shall be applied.

#### 5.7.4.7. Minimum Construction Requirements

Refer to the construction-related issues outlined above as part of the design criteria. An additional construction requirement is as follows:

- Submit field changes to the flow control device assembly, including elevation changes, to the Engineer of Record for confirmation that the device still meets the design requirements.

#### 5.7.4.8. Operations and Maintenance Requirements

Detention cistern O&M requirements are provided in *Appendix G (BMP No. 23)*. A plan shall be submitted demonstrating how the O&M requirements will be met.

## 5.7.5. Other Detention Options

Designers and developers are encouraged to consider creative opportunities for providing detention, when it is required. Athletic fields, roofs, parking lots that are not continually in use, and other large surface areas may provide opportunities for stormwater storage. This section presents other design options for detaining flows to meet flow control requirements.

### 5.7.5.1. Use of Parking Lots for Additional Detention

Private parking lots may be used to provide additional detention storage for runoff events greater than the 50 percent annual probability (2-year recurrence interval), provided all of the following conditions are met:

- Depth of storage in parking lots shall be 3 inches or less for parking lots serving retail and office buildings, and 6 inches or less for parking serving commercial truck traffic only, for runoff events up to and including the storm event with a 1 percent annual probability (100-year recurrence interval flow).
- The emergency overflow path shall be identified and noted on the engineering plan. The overflow shall not create a significant adverse impact to downhill properties or drainage system.
- Fire lanes used for emergency equipment shall be free of ponding water for all runoff events up to and including the storm event with a 1 percent annual probability (100-year recurrence interval flow).

### 5.7.5.2. Use of Roofs for Detention

Detention ponding on roofs may be used to meet flow control requirements provided all of the following conditions are met:

- The roof support structure shall be analyzed by a structural engineer to address the weight of ponded water.
- The roof area shall be sufficiently waterproofed to achieve a minimum service life of 30 years.
- The minimum pitch of the roof area shall be 1/4 inch per foot.
- An overflow system shall be designed to safely convey the peak flow with a 1 percent annual probability (100-year recurrence interval flow).
- A mechanism shall be included in the design to allow the ponding area to be drained for maintenance purposes or in the event the restrictor device is plugged.

# 5.8. Non-infiltrating BMPs

Non-infiltrating BMPs are designed to remove pollutants contained in stormwater runoff. Some non-infiltrating BMPs may provide low levels of flow control as a secondary benefit. The BMP categories in this section include:

- Non-infiltrating Bioretention
- Biofiltration Swales
- Filter Strips/Drains
- Sand Filters
- Wet Ponds
- Wet Vaults
- Stormwater Treatment Wetlands
- Combined Detention and Wet Pool Facilities
- Oil/Water Separators
- Proprietary and Emerging Water Quality Treatment Technologies

## *5.8.1. Design Requirements for Non-infiltrating BMPs*

### *5.8.1.1. Site and Design Considerations*

Refer to each non-infiltrating BMP section for setback requirements intended to protect adjacent properties, receiving waters, and other critical areas (i.e., landslide-prone areas).

The Phosphorus Removal and Enhanced Treatment performance goals, described in *Sections 3.5.2.2* and *3.5.2.3*, respectively, include treatment train options in which more than one type of BMP is used and the sequence of BMPs is prescribed. The specific pollutant removal role of the second or third BMP in a treatment train often assumes that significant solids settling has already occurred.

This section summarizes the placement of non-infiltrating BMPs in relation to detention BMPs as shown in Table 5.44. Also note that oil control BMPs shall be located upstream of non-infiltrating BMPs and detention BMPs, and as close to the source of the oil-generating activity as possible.

**Table 5.44. Non-infiltrating BMP Placement in Relation to Detention BMP.**

| Non-infiltrating BMP | Preceding Detention BMP | Following Detention BMP |
|---|---|---|
| Basic biofiltration swale (Section 5.8.3) | Allowed | Allowed—prolonged flows may reduce vegetation survival. Consider wet biofiltration swale instead. |
| Wet biofiltration swale (Section 5.8.3) | Allowed | Allowed. |
| Filter strip (Section 5.8.4) | Allowed | Not allowed—must be installed before flows concentrate; cannot effectively be re-dispersed. |
| Basic or large sand filter or sand filter vault (Section 5.8.5) | Allowed—presettling and control of floatables needed | Allowed—sand filters downstream of detention BMPs may require field adjustments if prolonged flows cause sand saturation, anoxic conditions, and phosphorus release. |
| Basic or large wet pond (Section 5.8.6) | Allowed | Allowed—less water level fluctuation in ponds downstream of detention may improve aesthetic qualities and performance. |
| Wet vault (Section 5.8.7) | Allowed | Allowed. |
| Stormwater treatment wetland/pond (Section 5.8.8) | Allowed | Allowed—less water level fluctuation and better plant diversity are possible if the stormwater wetland is located downstream of the detention BMP. |
| Proprietary and emerging water quality treatment technologies (Section 5.8.11) | Allowed | Allowed—depending on the type of technology. |

## 5.8.2. Non-infiltrating Bioretention

### 5.8.2.1. Description

Non-infiltrating bioretention facilities are earthen depressions or vertical walled containers with a designed soil mix and plants adapted to the local climate and soil moisture conditions. Stormwater is stored as surface ponding before it filters through the underlying bioretention soil. Stormwater that exceeds the surface storage capacity overflows to an adjacent drainage system. Treated water is collected by an underdrain and discharged. Bioretention facilities can be individual cells or multiple cells connected in series.

Unlike infiltrating bioretention (refer to *Section 5.4.4*), non-infiltrating bioretention facilities include a liner or other impermeable barrier to prevent infiltration to the underlying soil.

Two variations of non-infiltrating bioretention facilities are included in this section:

- **Non-infiltrating bioretention facility**: These bioretention facilities can have either sloped sides (e.g., an earthen depression with a liner) or vertical sides (e.g., vertical walled impermeable container). Non-infiltrating bioretention shall have an underdrain. These facilities may or may not have an outlet control structure to attenuate underdrain flows prior to release.
- **Non-infiltrating bioretention facility series**: Non-infiltrating bioretention facilities with sloped sides or vertical sides may be connected in a series, with the overflows of upstream cells directed to downstream cells to provide additional flow control and/or treatment, and conveyance.

### 5.8.2.2. Performance Mechanisms

Non-infiltrating bioretention provides flow control via detention, attenuation, and losses due to interception, evaporation, and transpiration. Water quality treatment is accomplished through sedimentation, filtration, adsorption, uptake, or biodegradation and transformation of pollutants by soil organisms, soil media, and plants.

### 5.8.2.3. Applicability

Non-infiltrating bioretention can be designed to provide on-site stormwater management, flow control, and/or water quality treatment. This BMP can be applied to meet or partially meet the requirements listed below.

| BMP | On-site | | Flow Control | | | Water Quality | | | | Conveyance |
|---|---|---|---|---|---|---|---|---|---|---|
| | List | Standard | Forest | Pasture | Peak | Basic | Enhanced | Oil Control | Phosphorus | |
| Non-Infiltrating Bioretention | ✓ | ✓[a] | ✓[a] | ✓[a] | ✓ | ✓ | ✓ | | | ✓[b] |

[a] Standard may be partially or completely achieved depending upon sizing factor and use of orifice control.

[b] Non-infiltrating bioretention facilities may be connected in series, with the overflows of upstream cells directed to downstream cells to provide conveyance.

### 5.8.2.4. Site Considerations

Because non-infiltrating bioretention facilities do not infiltrate water to surrounding soils (water discharges via an underdrain and surface overflow), these BMPs are not subject to infiltration facility requirements.

Non-infiltrating bioretention is not permitted if the underdrained water would be routed to a nutrient-critical receiving water.

Refer to *Appendix C* for additional infeasibility criteria for the On-site List Approach.

### 5.8.2.5. Design Criteria

Typical components of non-infiltrating bioretention facilities with sloped sides and vertical sides are shown in Figures 5.23 and 5.24, respectively.

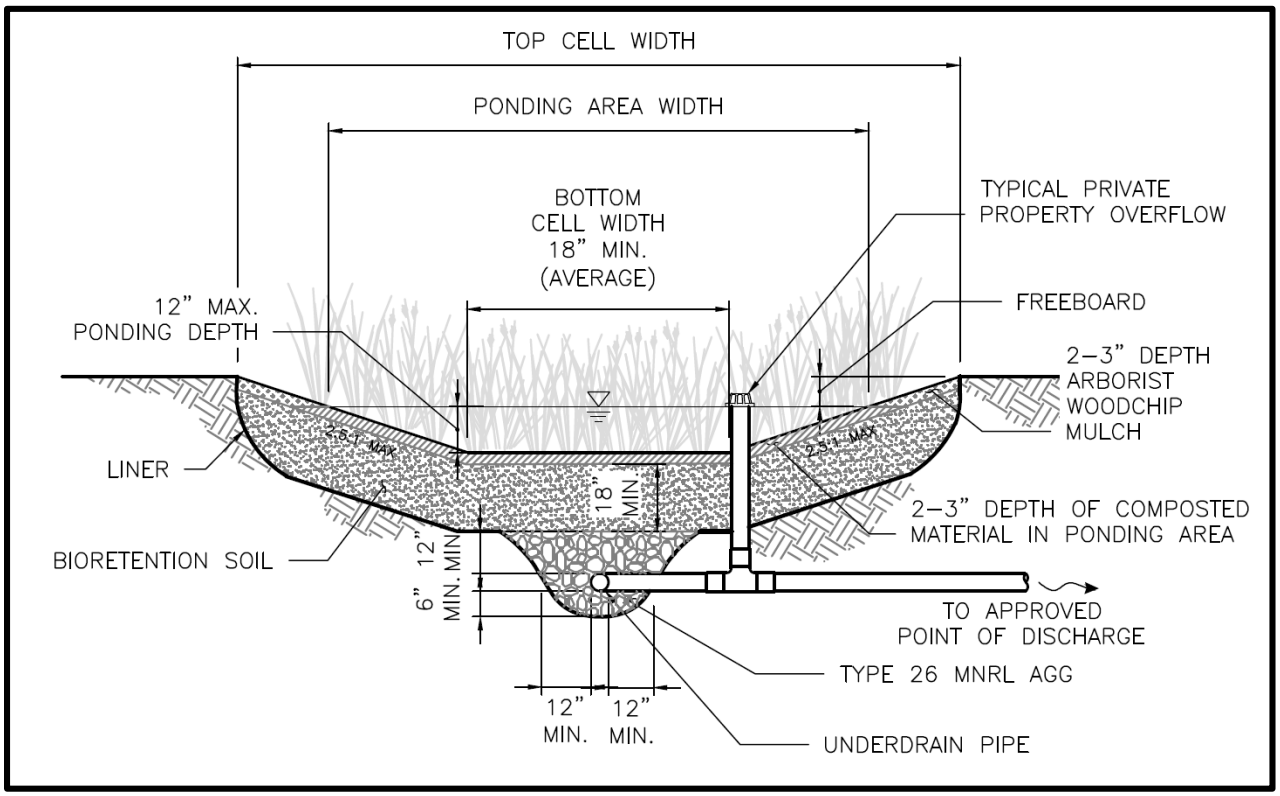


**Figure 5.23. Non-infiltrating Bioretention Facility with Sloped Sides.**

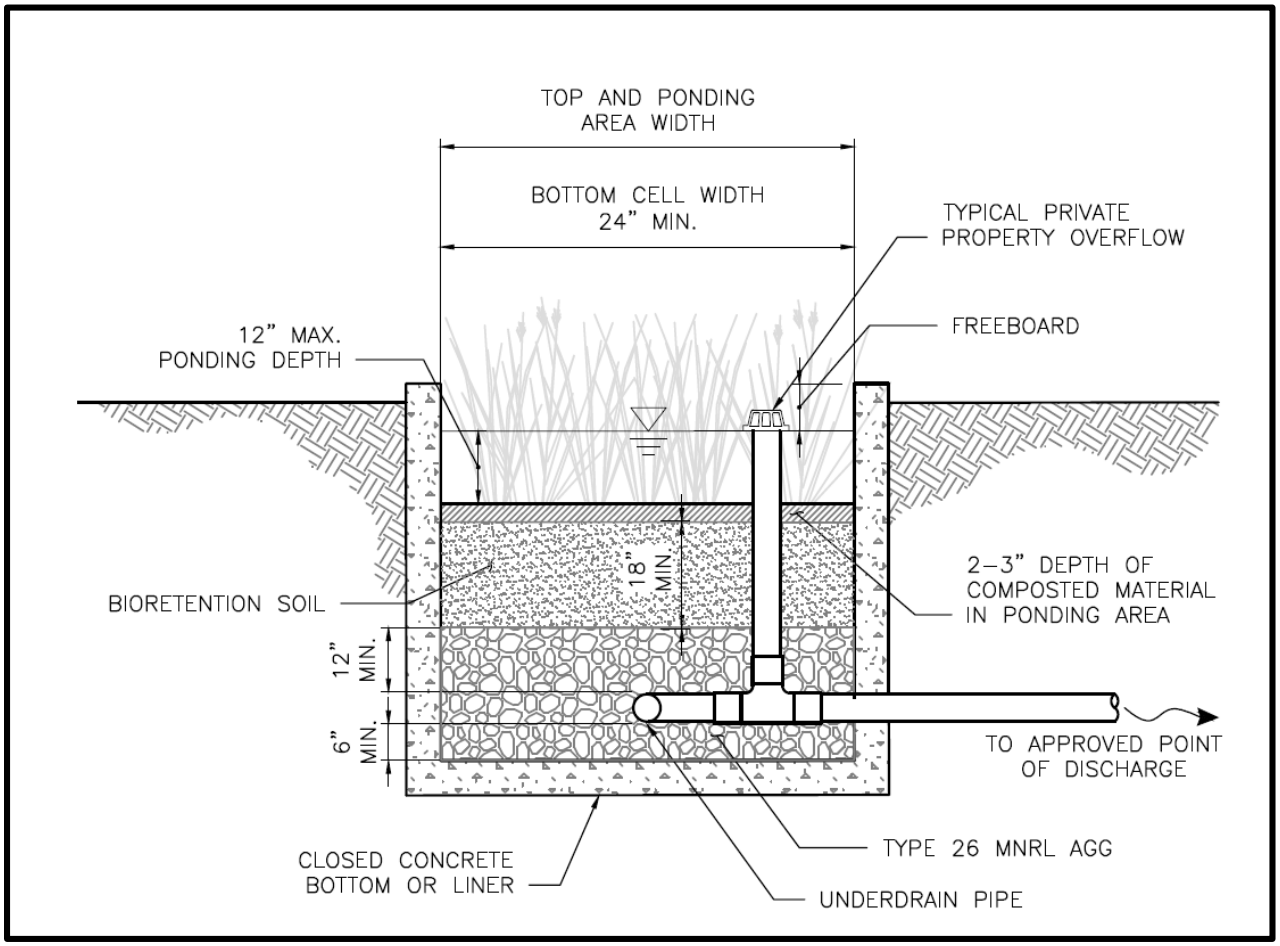


**Figure 5.24. Non-infiltrating Bioretention Facility with Vertical Sides.**

The design criteria for non-infiltrating bioretention is the same as presented for infiltrating bioretention in *Section 5.4.4*, with the following exceptions:

- The facility shall include a hydraulic restriction layer to prevent infiltration to surrounding soils. The facility may be composed of a low permeability (e.g., concrete) container with a closed bottom, or may be lined with a low permeability material (e.g., clay, geomembrane liner) to prevent infiltration.
- The facility shall be equipped with an underdrain.
- While not required, it is recommended that facilities with contributing drainage areas up to 5,000 square feet, be designed with a 0.25-inch diameter removable and maintainable orifice to improve flow control performance.

### *5.8.2.6. BMP Sizing*

#### Sizing for On-site List Approach

Non-infiltrating bioretention may be selected to meet the On-site List Requirement (refer to *Section 3.3.1* and *Appendix C* for infeasibility criteria). To meet the requirement, the facility shall be sized according to the sizing factors provided in Table 5.45. Sizing factors are based

on achieving a minimum wetted surface area of 5 percent of the contributing area, increased by 11 percent (i.e., multiplied by 1.11) to account for reduced performance due to the presence of an underdrain.

Factors are organized by cell ponding depth and side slope. To select the appropriate sizing factor the design ponding depth shall be rounded down to the nearest depth in the sizing table, or sizing factors may be linearly interpolated for intermediate ponding depths (e.g., between 4 and 6 inches ponding).

The facility shall meet the general requirements for non-infiltrating bioretention outlined in this section plus the following specific requirements:

- The bottom area shall be sized using the applicable sizing factor.
- It is preferred that the bottom area is flat, but up to 3 percent slope is permitted.
- For facilities with sloped sides, the side slopes within the ponded area shall be no steeper than 2.5H:1V.
- The bioretention soil depth shall be a minimum of 18 inches.
- The average ponding depth for the cell shall be no less than the selected ponding depth.

**Table 5.45. On-site List Sizing for Non-infiltrating Bioretention.**

| Bioretention Configuration | Ponding Depth | Sizing Factor for Facility Bottom Area<br>On-site List |
|---|---|---|
| Sloped sides | 2 inches | 5.0% |
| | 6 inches | 3.9% |
| | 12 inches | 2.6% |
| Vertical sides | 6 inches | 5.6% |
| | 12 inches | 5.6% |

NA – not applicable.

Bioretention Bottom Area = Contributing Hard Surface Area x Factor (%)/100.

Hard Surface Area Managed = Bioretention Bottom Area ÷ Factor (%)/100.

The bottom area for the cell is calculated as a function of the hard surface area routed to it. As an example, the bottom area of the bioretention cell with sloped sides would be equal to 2.6 percent of the hard surface area routed to it when the ponding depth is 12 inches. For facilities with sloped sides, the top area is calculated as a function of the cell bottom area and the side slopes up to the total facility depth (i.e., ponding and freeboard depth).

## Pre-sized Approach for Flow Control and Water Quality Treatment

The Pre-sized Approach may be used for projects with new and replaced hard surface areas up to 10,000 square feet. Under the Pre-sized Approach (refer to *Section 4.1.2*), pre-sized non-infiltrating bioretention facilities may be used to achieve the Peak Control and Water Quality Treatment Standards. Sizing factors for non-infiltrating bioretention facilities with

underdrains are provided in Table 5.46. Factors are organized by side slopes (i.e., sloped sides or vertical sides), performance standard, and facility ponding depth. To select the appropriate sizing factor the design ponding depth shall be rounded down to the nearest depth in the sizing table, or sizing factors may be linearly interpolated for intermediate ponding depths (e.g., between 6 and 12 inches ponding).

To use these pre-sized facilities to meet performance standards, the bioretention facility shall meet the general requirements outlined in this section plus the following specific requirements:

- The bottom area shall be sized using the applicable sizing factor. When used to meet the Peak Control Standard, the facility size shall not be larger than prescribed by the sizing factor because flow control performance may be diminished for larger facilities.
- It is preferred that the bottom area is flat, but up to a 3 percent slope is permitted.
- For facilities with sloped sides, the side slopes within the ponded area shall be no steeper than 2.5H:1V.
- The bioretention soil depth shall be a minimum of 18 inches.
- The average ponding depth for the cell shall be no less than the selected ponding depth.

**Table 5.46. Sizing Factors for Non-infiltrating Bioretention.**

| Bioretention Configuration | Ponding Depth | Sizing Factor for Facility Bottom Area | |
|---|---|---|---|
| | | Peak Control Standard | Water Quality Treatment Standard[a] |
| Sloped sides | 6 inches | TBD[b] | 0.8% |
| | 12 inches | TBD[b] | 0.4% |
| Vertical sides | 6 inches | TBD[b] | 1.3% |
| | 12 inches | TBD[b] | 1.1% |

NP – sizing factors not provided; NA- not applicable

Bioretention Facility Bottom Area = Contributing Hard Surface Area x Factor (%)/100

Hard Surface Area Managed = Bioretention Facility Bottom Area ÷ Factor (%)/100[a] Pre-sized approach may be used to meet basic water quality treatment. Enhanced water quality treatment may be achieved if soil suitability criteria are met (refer to *Section 4.5.2*).

[b] When used to meet the Peak Control Standard, the facility size shall not be larger than prescribed by the sizing factor because flow control performance may be diminished for larger facilities.

The *bottom area* for the bioretention facility area is calculated as a function of the hard surface area routed to it. As an example, to meet the Water Quality Treatment Standard, the bottom area of the bioretention facility with vertical sides would be equal to 1.1 percent of the hard surface area routed to it when the ponding depth is 12 inches. For facilities with sloped sides, the top area is calculated as a function of the cell bottom area and the side slopes up to the total facility depth (i.e., ponding and freeboard depth).

Instead of using the Pre-sized Approach, non-infiltrating bioretention facilities can be sized using a continuous simulation hydrologic model as described in the subsequent section.

### Modeling Approach for On-site Performance Standard, Flow Control, and Water Quality Treatment

When using continuous simulation hydrologic modeling to size non-infiltrating bioretention, the assumptions listed for infiltrating bioretention in Table 5.21 shall be applied, with the exception that the facility is modeled with no infiltration to underlying soil. Note that using currently available modeling methods, non-infiltrating bioretention is not capable of meeting the Pre-developed Forested or Pre-developed Pasture Standard. Facilities may be sized to achieve the Peak Control Standard with an optimized ratio of planter area and contributing surface area, but performance may diminish with larger and smaller ratios.

### *5.8.2.7. Minimum Construction Requirements*

Minimum construction requirements associated with non-infiltrating bioretention facilities include the following:

- Place bioretention soil in accordance with the requirements of City of Seattle Standard Specifications.
- Protect bioretention soil in cells from sediment during construction and do not use as sediment control facilities.

Refer to the Puget Sound LID Manual for additional guidance on bioretention construction.

### *5.8.2.8. Operations and Maintenance Requirements*

Non-infiltrating bioretention O&M requirements are provided in *Appendix G (BMP No. 22)*.

## 5.8.3. Biofiltration Swales

### 5.8.3.1. Description

A biofiltration swale is an open, gently sloped, vegetated channel designed to treat stormwater. Biofiltration swales are designed so that stormwater will flow evenly across the entire width of a densely vegetated channel. The four biofiltration swales described in this section are:

1. Basic biofiltration swale: a swale with a densely vegetated channel, with all runoff entering at the head of the swale.
2. Wet biofiltration swale: similar to the basic swale, but due to site conditions and/or influent conditions, this swale is designed to accommodate saturated soil conditions. It is appropriate for locations where the longitudinal slope is very low, water tables are high, or continuous low base flow is present.
3. Continuous inflow biofiltration swale: similar to the basic swale, but runoff enters at multiple locations along the length of the swale. The basic swale design is modified by increasing the swale length to achieve an equivalent average residence time.
4. Compost-amended biofiltration swale: same as the basic swale, but with a 3-inch compost blanket within the channel of the swale.

### 5.8.3.2. Performance Mechanisms

Pollutant removal occurs by filtration as stormwater moves through the vegetation, which enhances sedimentation, and traps pollutants within the compost or through which adhere to the vegetation or are trapped by the compost.

### 5.8.3.3. Applicability

A swale can be designed for water quality treatment and conveyance of stormwater flow. This combined use can reduce development costs by eliminating the need for separate conveyance and treatment systems. Biofiltration swales are typically configured as flow-through systems, with little or no detention or storage. This BMP can be applied to meet the requirements as summarized below.

| | On-site | | Flow Control | | | Water Quality | | | | |
|---|---|---|---|---|---|---|---|---|---|---|
| **BMP** | **List** | **Standard** | **Forest** | **Pasture** | **Peak** | **Basic** | **Enhanced** | **Oil Control** | **Phosphorus** | **Conveyance** |
| Basic Biofiltration Swale | | | | | | ✓ | TT-A or TT-B | | TT-A | ✓ |
| Wet Biofiltration Swale | | | | | | ✓ | TT-A or TT-B | | TT-A | ✓ |
| Continuous Inflow Biofiltration Swale | | | | | | ✓ | TT-A or TT-B | | TT-A | ✓ |

| BMP | On-site | | Flow Control | | | Water Quality | | | | Conveyance |
|---|---|---|---|---|---|---|---|---|---|---|
| | List | Standard | Forest | Pasture | Peak | Basic | Enhanced | Oil Control | Phosphorus | |
| Compost-amended Biofiltration Swale | | | | | | ✓ | ✓ | ✓ | | ✓ |

TT-A = Treatment Train A (must be followed by a Basic Sand Filter or Sand Filter Vault (*Section 5.8.5*)

TT-B = Treatment Train B (must be followed by an approved Proprietary and Emerging Water Quality Treatment Technology (*Section 5.8.11*)

Refer to *Section 3.5.2.2* for more information on Two-BMP Treatment Trains.

### *5.8.3.4. Site Considerations*

The following are common considerations for determining the feasibility of biofiltration swales for a particular site:

- Setbacks and restrictions:
  - All biofiltration swales shall be a minimum of 50 feet from the top of any steep (greater than 40 percent) slope. A geotechnical analysis and report shall be prepared addressing the potential impact of the facility on a slope steeper than 15 percent.
  - The water surface at the outlet invert elevation shall be set back 100 feet from existing septic system drain fields. This setback may be reduced with written approval of Public Health – Seattle & King County.
- Biofiltration swales are generally suitable for contributing areas of less than 5 acres.
- Biofiltration swales may be used for linear areas along roadways, driveways, and parking lots.
- Swales may be incorporated into a project's landscape design with either a mowable grass swale or water tolerant vegetation.
- Shaded areas, including deep channels, with less than 6 hours of sunlight during the summer months can inhibit vegetation growth.
- Stormwater runoff containing high concentrations of oil and grease impairs the treatment capability of a swale. Oil control options described in *Section 5.8.10* should be applied upstream of the biofiltration swale in these situations.
- Most biofiltration swales are designed to be on-line facilities with flows above the water quality design flow or volume passing through the facility with lesser or no pollutant removal. However, an off-line design (where flows above the water quality design flows or volume are bypassed around the facility) may be preferred in some cases to avoid scour and damage to vegetation during high flows. An additional benefit of designing swales to be off-line is that the stability check, which may make the swale larger, is not necessary (refer to *Sections 5.8.3.5 – Design Criteria and 5.8.3.6 – BMP Sizing*).

- Minimum footprint is 100 feet by 20 feet. The actual footprint will depend on the bottom width, side slopes, and length, which are all dependent on the design flows (refer to *Section 5.8.3.6 – BMP Sizing*).
- Alignment should avoid sharp bends where erosion of the swale side slope can occur. However, gradual meandering bends in the swale are desirable for aesthetic purposes and to promote slower flow.
- Leaves and needles that can smother the grass or clog part of the swale flow path can be a maintenance concern. Landscaping plans should take into consideration the problems that falling leaves and needles can cause for swale performance and maintenance. Landscape planter beds should be designed and located so that soil does not erode from the beds and enter a nearby biofiltration swale.
- Wet biofiltration swales are applied where a basic biofiltration swale is desired but not allowed or advisable because one or more of the following conditions exist:
    - The swale is on till soils and is downstream of a detention pond providing flow control.
    - Saturated soil conditions are likely because of seeps, continuous base flow, or high groundwater on the site.
    - Longitudinal slopes are less than 2 percent.
- A continuous inflow biofiltration swale is recommended when the following conditions exist:
    - Inflows are not concentrated or when flow enters at frequent points along the swale.
    - Unconcentrated inflow occurs along roadways that that have no curbs, where runoff sheet flows across the shoulder to the swale.
- A continuous inflow biofiltration swale is not appropriate when significant lateral flows enter a swale at some point downstream from the head of the swale. In this situation, the swale length shall be recalculated from the point of entry to provide adequate treatment for the increased flow.

Additional site considerations may apply depending on site conditions and other factors.

### *5.8.3.5. Design Criteria*

The following provides a description and requirements for the components of biofiltration swales. Typical plan and profile views of a biofiltration swale are provided in Figure 5.25. Some or all of the components may be used for a given application depending on the site characteristics and restrictions, pollutant loading, and design objectives. Design criteria are provided in this section or in Volume V of the SWMMWW for the following elements:

| Design Element | SWMMWW Design Criteria | Seattle-specific Design Criteria |
|---|---|---|
| Level spreaders | ✓ | ✓ |
| Underdrain (if any) | ✓ | ✓ |
| Low-flow drains (if any) | | ✓ |
| Outlet and overflow | | ✓ |

| Design Element | SWMMWW Design Criteria | Seattle-specific Design Criteria |
|---|---|---|
| Access | | ✓ |
| Soil amendment | | ✓ |
| Planting requirements | ✓ | ✓ |
| Dividing berm | ✓ | |
| Check dams or steps (if any) | ✓ | |
| High-flow bypass (if any) | ✓ | |

Refer to BMP T9.10 – Basic Biofiltration Swale, BMP T9.20 – Wet Biofiltration Swale, and BMP T9.30 – Continuous Inflow Biofiltration Swale in Volume V of the SWMMWW for specific design criteria. Refer to the WSDOT Highway Runoff Manual under BMP RT.04 – Biofiltration Swale for design criteria for compost-amended biofiltration swales (CABS). In addition to criteria developed by Ecology and WSDOT, the City has also developed specific design criteria for several design elements which are summarized below.

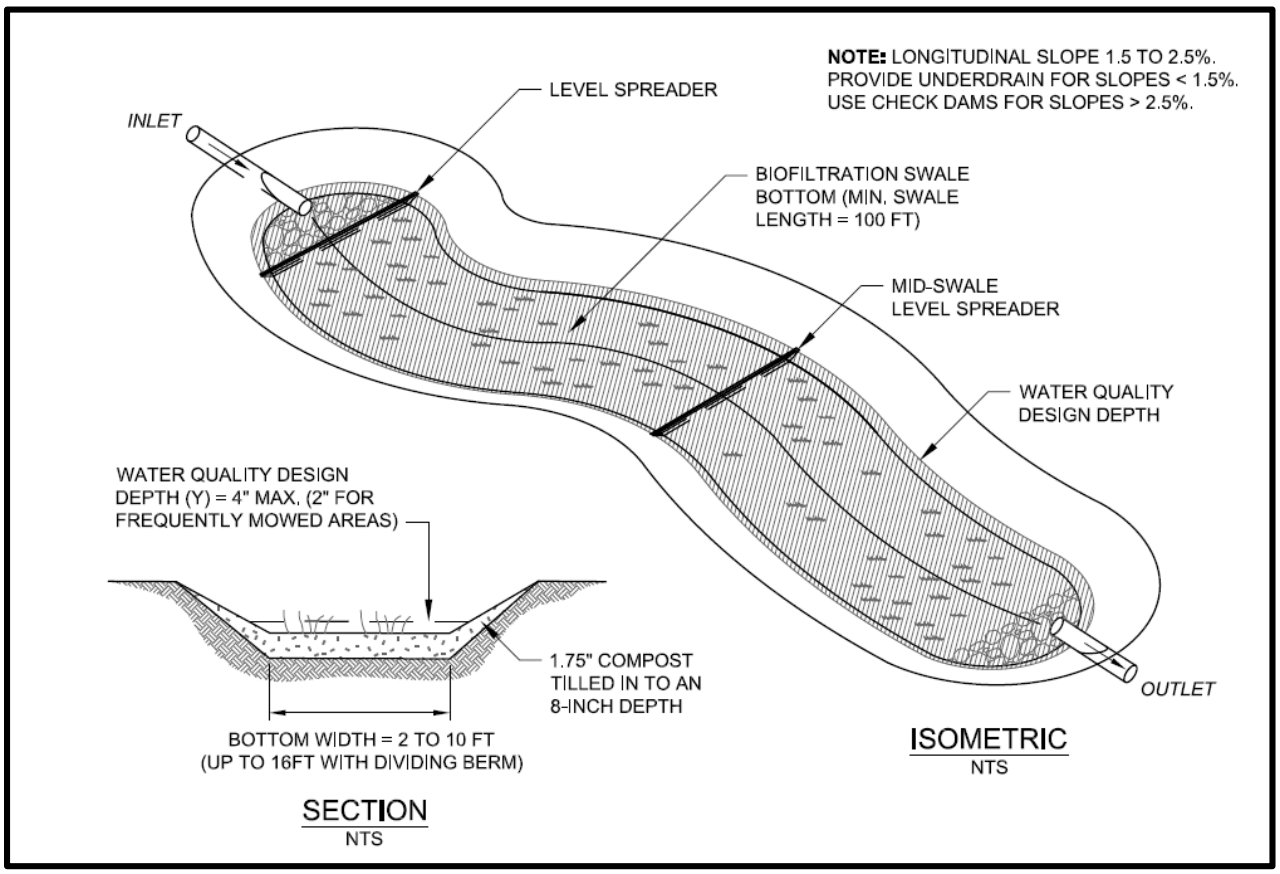


**Figure 5.25. Biofiltration Swale Plan and Profile.**

## *Level Spreaders*

Refer to BMP T9.10 – Basic Biofiltration Swale, BMP T9.20 – Wet Biofiltration Swale, and BMP T9.30 – Continuous Inflow Biofiltration Swale in Volume V of the SWMMWW for biofiltration swale design considerations.

In addition, the City of Seattle requires level spreaders at the toe of vertical drops (check dams). Design guidelines and example design figures for level spreaders are provided in *Appendix E*.

### Underdrains

Refer to BMP T9.10 – Basic Biofiltration Swale, BMP T9.20 – Wet Biofiltration Swale, and BMP T9.30 – Continuous Inflow Biofiltration Swale in Volume V of the SWMMWW for design considerations.

In addition, the City of Seattle requires underdrains for swales less than 1.5 percent longitudinal slope on till soils.

### Low-flow Drains

Low-flow drains are narrow surface drains filled with pea gravel that run lengthwise through the swale to bleed off base flows; they should not be confused with underdrains. Wet biofiltration swales are typically preferred when seeps, continuous base flow, or high groundwater is present. Alternatively, if a low-flow drain is proposed, the following requirements apply to biofiltration swales installed in Seattle:

- If a swale will receive base flows because of seeps and springs on site, then either a low-flow drain shall be provided or a wet biofiltration swale shall be used. In general, base flows less than 0.01 cubic feet per second (cfs) per acre can be handled with a low-flow drain. If flows are likely to be in excess of this level, a wet biofiltration swale should be used. Low-flow drains are not required for wet biofiltration swales.
- If a low-flow drain is used, it shall extend the entire length of the swale.
- The low-flow drain shall be a minimum of 6 inches deep, and its width shall be no greater than 5 percent of the calculated swale bottom width. Adjust the bottom width accordingly to maintain the necessary design bottom width for treatment.
- If an anchored plate or concrete sump is used for flow spreading at the swale inlet, the plate or sump wall shall have a v-notch (maximum top width equal to 5 percent of swale width) or holes to allow preferential exit of low flows into the drain. Additional design guidelines for level spreaders are provided in *Appendix E*.

### Outlet and Overflow

All biofiltration swales shall include an outlet and overflow to an approved point of discharge per *Section 4.3.4*.

### Access

Access requirements specific to biofiltration swale installations in Seattle are summarized below.

| Access Requirement | Basic and Continuous Inflow Biofiltration Swale | Wet Biofiltration Swale |
|---|---|---|
| Access locations | Half the length of the swale | Inflow and outflow only |
| Access road width | Minimum of 10 feet | |
| Access road curves | Minimum width of 15 feet and a minimum outside radius of 40 feet | |

| Access Requirement | Basic and Continuous Inflow Biofiltration Swale | Wet Biofiltration Swale |
|---|---|---|
| Wheel strips made of modular grid pavement (refer to Figure 5.25)[a] | • Support 16,000 pound vehicle<br>• Firm underlying soil or structural fill (not amended topsoil)<br>• Fill or cover with underlying soil (no amendments) and seed with grass<br>• Strip width = 18 inches<br>• Not counted as treatment area<br>• Not allowed in biofiltration swales with underdrains | Not allowed |

[a] If a low-flow drain is also needed, a portion of the wheel strip may be filled with pea gravel as appropriate to form the drain.

### *Soil Amendment*

The following requirements shall be followed for biofiltration swales installed in Seattle:

- The condition of the soil is critical to support healthy grass growth. Native topsoil that has been stockpiled on site or in-situ soil may be used provided that it meets the soil quality criteria described in *Section 4.5.2*. Soil amendments are required if underlying soil is not suitable. Refer to *Section 5.1* for information regarding Soil Amendment BMP requirements.
- If the longitudinal slope is less than 1.5 percent (requiring the use of underdrains along the swale length), the subgrade should contain 10 percent or more of sand to promote infiltration of standing water. If sand is added to promote drainage, the soil or sand substrate shall still be amended with compost.

### *Planting Requirements*

Refer to BMP T9.10 – Basic Biofiltration Swale, BMP T9.20 – Wet Biofiltration Swale, and BMP T9.30 – Continuous Inflow Biofiltration Swale in Volume V of the SWMMWW for biofiltration planting requirements. The following additional planting requirements shall be followed for biofiltration swales installed in Seattle:

- Grass shall be established throughout the entire treatment area of the biofiltration swale subject to the following provisions:
  - Seeding is best performed in spring (mid-March to June) or fall (late September to October). For summer seeding, sprinkler systems or other measures for watering grass seed shall be provided.
  - Seed may be applied via hydroseeding or broadcast application.
  - Irrigation is required during the first summer following installation if seeding occurs in spring or summer. Swales seeded in the fall may not need irrigation. Site planning shall address the need for sprinklers or other means of irrigation.
- Swales are subject to both dry and wet conditions and accumulation of sediment and debris. A mixture of dry-area and wet-area grass species that can continue to grow through silt deposits is most effective. Acceptable grass seed mixes for the Seattle area are provided in the City of Seattle Standard Specifications (9-14). As an alternative to these mixes, a horticultural or erosion control specialist may develop a seed specification tailored to the site. *Appendix E* includes a plant list for biofiltration

swales that lists grasses or other plants that are particularly tolerant of wet conditions.

- Sod may be used where needed to initiate adequate growth. If sod is used, the sod shall be grown from a seed mix suitable for a biofiltration swale and clay content shall be less than 10 percent.
- During seeding, slow-release fertilizers may be applied to speed the growth of grass. If the swale is discharges to a nutrient-critical receiving water, low phosphorus fertilizers (such as formulations in the proportion 3: 1: 3 N-P-K or less) or a slow-release phosphorus formulation such as rock phosphate or bone meal should be used. A typical fertilizer application rate should be 2 pounds per 1,000 square feet. If animal manures are used in the fertilizer, they shall be sterilized to avoid leaching fecal coliform bacteria into receiving waters.
- A grassy swale should be incorporated into the project site landscape design. Shrubs may be planted along the edges of a swale (above the water quality treatment level) provided that exposure of the swale bottom to sunlight and maintenance accessibility are not compromised. *Note*: For swales used to convey high flows, the plant material selected shall bind the soil adequately to prevent erosion.

### 5.8.3.6. BMP Sizing

Refer to BMP T9.10 – Basic Biofiltration Swale, BMP T9.20 – Wet Biofiltration Swale, and BMP T9.30 – Continuous Inflow Biofiltration Swale in Volume V of the SWMMWW for BMP Sizing considerations.

Biofiltration swale design procedures are described in the SWMMWW for the following steps:

- Preliminary steps (P)
- Design steps (D)
- Stability check steps

Seattle-specific guidance for Preliminary Step P-1 includes the following:

- For off-line swales, the high flow bypass shall be designed so that all flows up to and including the water quality design flow rate are directed to the swale. The water quality design flow rate (Q) is calculated by multiplying the design flow determined by an approved continuous runoff model by an offline ratio of 3.0.
- For on-line swales, Q is determined by multiplying the design flow determined by an approved continuous runoff model by an on-line ratio of 1.65.

### 5.8.3.7. Minimum Construction Requirements

Minimum construction requirements associated with biofiltration swales include the following:

- Grade swales to attain uniform longitudinal and lateral slopes.
- Avoid compaction during construction.

- Do not put biofiltration swales into operation until areas of exposed soil in the contributing drainage areas have been sufficiently stabilized. Deposition of eroded soils can impede the growth of grass in the swale and reduce swale treatment effectiveness. Thus, erosion and sediment control measures shall remain in place until the swale vegetation is established (refer to *Volume 2 – Construction Stormwater Control*).
- Protect newly constructed swales from stormwater flows until grass has been established by diverting flows or by covering the swale bottom with clear plastic until the grass is well rooted. If these actions are not feasible, place an erosion control blanket per City of Seattle Standard Plan No. 9-14.5(2) over the freshly applied seed mix. Sod may be used as a temporary cover during the wet season, but sodded areas shall be reseeded with a suitable grass mix as soon as the weather is conducive to seed germination. Remove sod before reseeding.

#### *5.8.3.8. Operations and Maintenance Requirements*

Basic, wet, and continuous inflow biofiltration swale O&M requirements are provided in *Appendix G (BMP No. 9 and 10)*. Compost-amended biofiltration swale O&M requirements can be found in the WSDOT Highway Runoff Manual under BMP RT.04 – Biofiltration Swale.

## 5.8.4. Filter Strips/Drains

### 5.8.4.1. Description

A filter strip is a grassy slope that receives unconcentrated runoff from adjacent hard surfaces such as a parking lots, driveways, or roadways. Filter strips are graded to maintain sheet flow over their entire width. Compost and other amendments can be incorporated into filter strips designs to provide enhanced treatment (refer to Section 3.5.2.3). The following three types of filter strip BMPs are described in this section:

1. **Basic filter strip**: a flat filter strip with no side slopes. Polluted stormwater is distributed as sheet flow across the inlet width of the filter strip.
2. **Compost-amended vegetated filter strip (CAVFS)**: An enhanced treatment option, similar to the basic filter strip, but the filter area is compost-amended to improve infiltration characteristics, increase surface roughness, and improve plant sustainability. Once permanent vegetation is established, the advantages of the CAVFS are higher surface roughness, greater retention and infiltration capacity, improved removal of soluble cationic contaminants through sorption, improved overall vegetative health, and a reduction of invasive weeds. Compost-amended systems have somewhat higher construction costs due to more expensive materials, but require less land area for runoff treatment, which can reduce overall costs.
3. **Media filter drain (MFD)**: Previously referred to as the *ecology embankment*, a linear flow-through stormwater treatment device that can be sited along roadway side-slopes (conventional design) and medians (dual MFD), borrow ditches, or other linear depressions. Cut-slope applications may also be considered. MFDs have four basic components: a gravel no-vegetation zone, a vegetated filter strip, the MFD mix bed, and an optional gravel-filled underdrain trench or layer of crushed surfacing base course (CSBC). The layer of CSBC shall be porous enough to allow treated flows to freely drain away from the MFD mix.

### 5.8.4.2. Performance Mechanisms

Filter strips remove pollutants primarily by filtration as stormwater moves through the grass blades. This enhances sedimentation and traps pollutants which adhere to the grass and thatch. Pollutants can also be adsorbed by the underlying soil when infiltration occurs, but the extent of infiltration depends on the type of soil, the density of grass, and the slope of the filter strip. The MFD removes suspended solids, phosphorus, and metals from roadway runoff through physical straining, ion exchange, carbonate precipitation, and biofiltration.

### 5.8.4.3. Applicability

A filter strip can be designed for both treatment and conveyance of stormwater flow. This combined use can reduce development costs by eliminating the need for separate conveyance and treatment systems. Basic filter strips, CAVFS, and MFDs are typically configured as flow-through systems, with little or no detention or storage. This BMP can be applied to meet the requirements as summarized below.

| BMP | On-site | | Flow Control | | | Water Quality | | | | Conveyance |
|---|---|---|---|---|---|---|---|---|---|---|
| | List | Standard | Forest | Pasture | Peak | Basic | Enhanced | Oil Control | Phosphorus | |
| Basic Filter Strip | | | | | | ✓ | TT-A or TT-B | | TT-A or TT-B | ✓ |
| CAVFS | | | | | | ✓ | ✓ | | | ✓ |
| MFD | | | | | | ✓ | ✓ | | | ✓ |

TT-A = Treatment Train A (must be followed by a Linear Sand Filter (*Section 5.8.5*).

TT-B = Treatment Train B (must be preceded by a Linear Sand Filter (*Section 5.8.5*).

Refer to *Section 3.5.2.2* for more information on Two-BMP Treatment Trains.

### 5.8.4.4. Site Considerations

The following are site considerations for determining the feasibility of filter strips for a particular site:

- Setbacks and restrictions:
  - The filter strips are not typically permitted within landslide–prone areas as defined by the Regulations for Environmentally Critical Areas (SMC, Section 25.09.020).
  - The filter strips are not typically permitted within a setback above a steep slope area (SMC, Section 25.09.020). The setback is calculated as 10 times the height of the steep slope area (to a 500 foot maximum setback). Filter strips within this setback may be feasible provided a detailed slope stability analysis is completed by a geotechnical engineer. The analysis shall determine the effects that filter strip would have on the steep slope area and adjacent properties.
  - For sites with septic systems, the point of discharge to filter strip shall be downgradient of the drainfield primary and reserve areas.
- Filter strips are suitable for sites with a maximum lateral slope of the contributing area of 2 percent.
- Filter strips are suitable for sites with a maximum longitudinal slope of the contributing area of 5 percent. Contributing areas with longitudinal slopes steeper than 5 percent should either use a different BMP or shall provide energy dissipation and flow spreading mechanisms upslope of the upper edge of the filter strip.
- Filter strips are designed as on-line facilities. They are designed to receive continuous sheet flow from contributing areas and should not be located downstream of detention facilities or other concentrated flows.
- MFDs can be used in areas with longitudinal slopes less than 5 percent.

Additional site considerations may apply depending on site conditions and other factors.

### 5.8.4.5. Design Criteria

Refer to BMP T9.40 – Basic Filter Strip, BMP T7.40 – CAVFS, and BMP T8.40 – MFD in Volume V of the SWMMWW for filter strip design criteria. Additional descriptions, applications, and

design details are provided in the WSDOT Highway Runoff Manual under BMP RT.02 – Vegetated Filter Strip and RT.07 – MFD. The City allows the use of MFDs per the Ecology-approved designs outlined in the WSDOT Highway Runoff Manual.

### 5.8.4.6. BMP Sizing

Filter strips shall be designed to meet the criteria listed in Table 5.47. Refer to BMP T9.40 – Basic Filter Strip, BMP T7.40 – CAVFS, and BMP T8.40 – MFD in Volume V of the SWMMWW for additional information on filter strip sizing methods.

**Table 5.47. Basic and Compost Amended Vegetated Filter Strip Design and Sizing Criteria.**

| Design Parameter | Basic Filter Strip | CAVFS | MFD |
|---|---|---|---|
| Longitudinal Slope | 1 – 33% | 1 – 15% | 5% |
| Lateral Slope | NA | | 2 – 25% |
| Maximum velocity | 0.5 feet/second | | NA |
| Maximum water depth | 1 inch | | NA |
| Manning's roughness coefficient | 0.35 | 0.40 to 0.55[a] | NA |
| Minimum hydraulic residence time at Water Quality Design Flow Rate | 9 minutes | NA | NA |
| Minimum length | 100 feet | 100 feet | NA |
| Maximum side slope | Inlet edge ≥ 1 inch lower than contributing paved area | | NA |
| Max. tributary drainage flow path | 150 feet | | |
| Max. longitudinal slope of contributing area | 5% (steeper than 5% need upslope flow spreading and energy dissipation) | | 5% |
| Max. lateral slope of contributing area | 2% (at the edge of the strip inlet)[b] | | NA |

[a] Manning's n ranges from 0.40 (hydroseeded, grass maintained at 95% density and 4-inch length via mowing, periodic reseeding, and possible landscaping with shrubs) to 0.55 (top-dressed with ≥ 3 inches compost or mulch [ seeded or landscaped]).

[b] A stepped series of flow spreaders installed at the head of the strip could compensate for slightly steeper slopes.

### 5.8.4.7. Minimum Construction Requirements

Minimum construction requirements associated with filter strips include the following:

- Do not put filter strips into operation until areas of exposed soil in the contributing drainage areas have been sufficiently stabilized. Deposition of eroded soils can impede the growth of grass in the filter strip and reduce treatment effectiveness. Erosion and sediment control measures shall remain in place until the filter strip vegetation is established (Refer to *Volume 2* – Construction Stormwater Control for erosion and sediment control BMPs).
- Avoid compaction of the filter strip areas during construction.

#### *5.8.4.8. Operations and Maintenance Requirements*

Basic filter strip O&M requirements are provided *Appendix G (BMP No. 11)*. CAVFS and MFD O&M requirements can be found in the WSDOT Highway Runoff Manual under BMP RT.02 – Vegetated Filter Strip and RT.07 – MFD.

## 5.8.5. Sand Filters

### 5.8.5.1. Description

Sand filters are used to provide water quality treatment. The following three sand filter BMPs are described in this section:

1. Sand filter basins: Like an infiltration basin, the sand filter basin is an impoundment that temporarily stores stormwater runoff so that it can infiltrate, but instead of infiltrating through the underlying soil, stormwater passes through a constructed sand bed. Sand filters can be sized as either a basic or a large facility to meet different water quality objectives. Sand filter basins are designed with underdrains to collect and route runoff following treatment to the downstream conveyance system.
2. Sand filter vaults: A sand filter vault is similar to a sand filter basin, except that the entire facility is installed below grade in a vault. It typically consists of a presettling cell (if pretreatment is not already provided) and a sand filtration cell. Like a sand filter basin, a vault can be sized as either a basic or a large facility to meet different water quality objectives.
3. Linear sand filters: Linear sand filters are similar to sand filter vaults, except the vault is configured as a long, shallow, linear system. The vault contains two cells or chambers, one for removing coarse sediment and the other containing sand overlying an underdrain. Runoff usually enters the settling chamber as unconcentrated flow from an adjacent area and overflows to a central weir into the sand portion of the vault.

### 5.8.5.2. Performance Mechanisms

Sand filters treat stormwater primarily via physical filtration. As stormwater passes through the sand media, pollutants are trapped in the small spaces between sand grains, or adhere to the sand surface. Over time, soil bacteria may also grow in the sand bed and some biological removal may occur.

Sand filter media can also be amended with steel fiber and crushed calcitic limestone to increase dissolved metals removal. Use of amended sand filters requires Director's approval.

### 5.8.5.3. Applicability

A sand filter BMP can be applied to meet the requirements as summarized below.

| BMP | On-site | | Flow Control | | | Water Quality | | | | Conveyance |
|---|---|---|---|---|---|---|---|---|---|---|
| | List | Standard | Forest | Pasture | Peak | Basic | Enhanced | Oil Control | Phosphorus | |
| Basic Sand Filter | | | | | | ✓ | TT-A, TT-B, or TT-C | | TT-A, TT-B, TT-C, or TT-D | ✓ |
| Large Sand Filter | | | | | | ✓ | ✓ | | ✓ | ✓ |

| BMP | On-site | | Flow Control | | | Water Quality | | | | Conveyance |
|---|---|---|---|---|---|---|---|---|---|---|
| | List | Standard | Forest | Pasture | Peak | Basic | Enhanced | Oil Control | Phosphorus | |
| Sand Filter Vault | | | | | | ✓ | TT-A, TT-B, or TT-C | | TT-A, TT-B, TT-C, or TT-D | ✓ |
| Large Sand Filter Vault | | | | | | ✓ | ✓ | | ✓ | ✓ |
| Linear Sand Filter | | | | | | ✓ | TT-E or TT-F | ✓[a] | TT-E or TT-F | ✓ |

TT-A = Treatment Train A (must be preceded by a Basic Wet Pond (*Section 5.8.6*), Wet Vault (*Section 5.8.7*), Basic Combined Detention/Wetpool (*Section 5.8.9*)

TT-B = Treatment Train B (must be preceded by a Biofiltration Swale (*Section 5.8.3*)

TT-C = Treatment Train C (must be followed by an approved Proprietary and Emerging Water Quality Treatment Technology (Section 5.8.11) (*Section 5.8.11*)

TT-D = Treatment Train D (must be preceded by a Stormwater Treatment Wetland (*Section 5.8.8*)

TT-E = Treatment Train E (must be followed by a Filter Strip (*Section 5.8.4*)

TT-F = Treatment Train F (must be preceded by a Filter Strip (*Section 5.8.4*)

Refer to *Section 3.5.2.2* for more information on Two-BMP Treatment Trains

[a] Linear sand filter may not be used for oil control if it is used to satisfy any other treatment requirement.

### 5.8.5.4. Site Considerations

Refer to BMP T8.10 – Basic Sand Filter Basin, BMP T8.11 – Large Sand Filter Basin, BMP T8.20 – Sand Filter Vault, and BMP T8.30 – Linear Sand Filter in Volume V of the SWMMWW for site considerations related to sand filters. The following site considerations also apply to sand filters installed in Seattle:

- No specific setbacks or restrictions apply to closed bottom (unlined) sand filter. The following setbacks and restrictions apply to open bottom (lined) sand filters.
  - All open bottom sand filters shall be a minimum of 50 feet from the top of any steep (greater than 40 percent) slope. A geotechnical analysis and report shall be prepared addressing the potential impact of the open bottom sand filter on a slope steeper than 15 percent.
  - The water surface at the outlet invert elevation shall be set back 100 feet from existing septic system drain fields. This setback may be reduced with written approval of Public Health – Seattle & King County.
- A sand filter can add landscape interest and should be incorporated into the project landscape design.
- Interior side slopes may be stepped with flat areas to provide informal seating with a game or play area below.
- Perennial beds can be planted above the overflow water surface elevation. However, large shrubs and trees are not recommended because shading limits evaporation and can inhibit drying of the filter surface. In addition, falling leaves and needles can clog the filter surface, requiring more frequent maintenance.

Additional site considerations may apply depending on site conditions and other factors.

### *5.8.5.5. Design Criteria*

The following provides a description and requirements for the components of sand filters. Some or all of the components may be used for a given application depending on the site characteristics and restrictions, pollutant loading, and design objectives. Design criteria are provided in this section or in Volume V of the SWMMWW for the following elements:

| Design Element | SWMMWW Design Criteria | Seattle-specific Design Criteria |
|---|---|---|
| Presettling | ✓ | ✓ |
| Liner | ✓ | ✓ |
| Geometry and composition | ✓ | ✓ |
| Structural requirements | ✓ | ✓ |
| Underdrains (if any) | ✓ | ✓ |
| Sand media | ✓ | ✓ |
| Vegetation (if any) | | ✓ |
| Access | ✓ | ✓ |
| Offline/on-line facilities | ✓ | |
| Inlets and outlets | ✓ | |

Refer to BMP T8.10 – Basic Sand Filter Basin, BMP T8.11 – Large Sand Filter Basin, BMP T8.20 – Sand Filter Vault, and BMP T8.30 – Linear Sand Filter in Volume V of the SWMMWW for sand filter basin and sand filter vault design criteria. In addition to Ecology's criteria, the City has also developed specific design criteria for several design elements which are summarized below.

#### Presettling

Presettling is required to prevent clogging and extend the service life of the sand filter media. Presettling design requirements are described in *Section 4.4*. Refer to BMP T8.10 – Basic Sand Filter Basin, BMP T8.11 – Large Sand Filter Basin, BMP T8.20 – Sand Filter Vault, and BMP T8.30 – Linear Sand Filter in Volume V of the SWMMWW for sand filter basin and sand filter vault presettling requirements.

The following additional criteria apply specifically to sand filter vaults installed in Seattle:

- The presettling cell bottom may be longitudinally level or inclined toward the inlet.
- To facilitate sediment removal, the presettling cell bottom shall also slope from each side towards the center at a minimum of 5 percent, forming a broad "v".
- More than one "v" may be used to minimize presettling cell depth.

#### Liners

Refer to BMP T8.10 – Basic Sand Filter Basin, BMP T8.11 – Large Sand Filter Basin, BMP T8.20 – Sand Filter Vault, and BMP T8.30 – Linear Sand Filter in Volume V of the SWMMWW for sand filter liner requirements.

- Refer to *Appendix E* for additional information on liner design criteria.

## Geometry and Composition

Refer to BMP T8.10 – Basic Sand Filter Basin, BMP T8.11 – Large Sand Filter Basin, BMP T8.20 – Sand Filter Vault, and BMP T8.30 – Linear Sand Filter in Volume V of the SWMMWW for sand filter basin and sand filter geometry and composition requirements.

The following additional criterion applies to all sand filter types installed in Seattle:

- Depth of storage over the filter media (d) shall be 6 feet maximum

The following additional criterion applies specifically to linear sand filters installed in Seattle:

- If separated from traffic areas, a linear sand filter may be covered or open, but if covered, the cover shall be removable for the entire length of the filter. Covers shall be grated if flow to the filter is from sheet flow.

## Structural Requirements

Refer to BMP T8.10 – Basic Sand Filter Basin, BMP T8.11 – Large Sand Filter Basin, BMP T8.20 – Sand Filter Vault, and BMP T8.30 – Linear Sand Filter in Volume V of the SWMMWW for sand filter structural requirements.

The following additional criteria apply specifically to linear sand filters installed in Seattle:

- A linear sand filter vault shall be concrete (precast/prefabricated or cast-in-place). The concrete shall conform to the "Material" requirements for wet vaults (refer to *Section 5.8.7.5*).
- At the discretion of DPD, the sediment cell may be made of materials other than concrete, provided water can be evenly spread for uniform delivery into the sand filter cell.
- Where linear sand filters are located in traffic areas, they shall meet the structural requirements specified for wet vaults (refer to *Section 5.8.7.5*). The sediment cell shall have a removable grated cover that meets HS-25 traffic loading requirements. The cover over the sand filter cell may be either solid or grated.

## Underdrains

Underdrains are required to allow the sand media to dry out between events. Refer to BMP T8.10 – Basic Sand Filter Basin, BMP T8.11 – Large Sand Filter Basin, BMP T8.20 – Sand Filter Vault, and BMP T8.30 – Linear Sand Filter in Volume V of the SWMMWW for sand filter underdrain requirements.

The following additional requirements for underdrains also apply to sand filters installed in Seattle:

- If a drain strip is used for lateral drainage, the strip shall be placed at the slope specified by the manufacturer but at least at 0.5 percent. All drain strips shall extend to the central collector pipe. Drain strip installations shall be analyzed for conveyance because manufactured products vary in the amount of flow they are designed to handle.

- Underdrain pipes shall be per City of Seattle Standard Plan No. 291.
- A geotextile fabric (refer to specifications in *Appendix E*) shall be used between the sand layer and drain rock or gravel and placed so that 2 inches of drain rock/gravel is above the fabric. Drain rock shall be 3/4- to 1-1/2 inch rock or gravel backfill, washed free of clay and organic material. Cover the geotextile fabric with 1-inch of drain rock/gravel. Use 3/4- to 1-1/2-inch drain rock or gravel backfill, washed free of clay and organic material. These requirements can be met with City of Seattle Mineral Aggregate Type 4.

### Sand Media

Refer to BMP T8.10 – Basic Sand Filter Basin, BMP T8.11 – Large Sand Filter Basin, BMP T8.20 – Sand Filter Vault, and BMP T8.30 – Linear Sand Filter in Volume V of the SWMMWW for sand filter media requirements.

The following additional requirement for sand media also applies to sand filters installed in Seattle:

- Sand filters shall drain freely. Sand media cannot be saturated for extended periods because under these conditions, oxygen can be depleted, releasing pollutants such as dissolved metals and phosphorus that are more mobile under anoxic conditions. To prevent this release of pollutants that have accumulated in the media, sand filters shall be designed to drain the water quality design storm volume within 72 hours.

### Vegetation

Vegetation requirements for basic and large sand filter basins are not included in Volume V of the SWMMWW; however, the City has developed the following guidelines for grass cover for sand filter basins installed in Seattle:

- No topsoil may be added to sand filter beds because fine-grained materials (e.g., silt and clay) reduce the hydraulic capacity of the filter.
- Grass shall tolerate the demanding environment of the sand bed. Sand filters experience long periods of saturation during the winter wet season, followed by extended dry periods during the summer. Modeling predicts that sand filters will be dry about 60 percent of the time in a typical year. Consequently, vegetation shall be capable of surviving drought, as well as wet conditions.
- *Appendix E* includes a plant list for sand filters. These species can generally survive approximately 1 month of submersion while dormant in the winter (until about February 15), but they can only withstand about 1 to 2 weeks of submersion after mid-February.
- Several grass species in the plant list in *Appendix E* can withstand summer drying and are fairly tolerant of infertile soils. In general, planting a mixture of three or more species is recommended. This ensures better coverage since tolerance of the different species is somewhat different, and the best adapted grasses will spread more rapidly than the others. Legumes, such as clover, fix nitrogen and can thrive in low-fertility soils such as sands. This makes them particularly good choices for planting the sand filter bed.

- A sport-field sod grown in sand may be used on the sand surface. No other sod may be used due to the high clay content in most sod soils.
- To prevent overuse that could compact and potentially damage the filter surface, permanent structures (e.g., playground equipment or bleachers) are not permitted. Temporary structures or equipment shall be removed for filter maintenance.
- Seed should be applied in spring or mid to late fall unless irrigation is provided. If the filter is seeded during the dry summer months, surface irrigation is required to ensure that the seeds germinate and survive. Seed shall be applied at 80 pounds/acre.
- Slow-release fertilizers may be applied to improve germination.
- Low phosphorus fertilizers (such as formulations in the proportion 3: 1: 3 N-P-K or less) or a slow-release phosphorus formulation should be used.

### Access

Refer to BMP T8.10 – Basic Sand Filter Basin, BMP T8.11 – Large Sand Filter Basin, BMP T8.20 – Sand Filter Vault, and BMP T8.30 – Linear Sand Filter in Volume V of the SWMMWW for sand filter access requirements.

The following additional criteria apply specifically to sand filter vaults installed in Seattle:

- Provision for access is the same as for wet vaults (refer to *Section 5.8.7.5*). However, the arch culvert sections allowed for wet vaults may not be used for sand filter vaults. Free access to the entire sand bed is needed for maintenance. Removable panels shall be provided over the entire sand bed.
- An access road shall be provided to the inlet and outlet of a sand filter for inspection and maintenance purposes.

## *5.8.5.6. BMP Sizing*

Sand filters shall be designed to capture and treat 91 percent of the total runoff volume (95 percent for large sand filters) as calculated by an approved continuous runoff model. Only 9 percent of the total runoff volume (5 percent for large sand filters) may bypass or overflow from the sand filter facility. A flow splitter may be used to facilitate bypass. Design guidelines for flow splitters are provided in *Appendix E*. The following design criteria apply to all sand filters, unless otherwise noted for Sand Filter Vaults and Linear Sand Filters.

Two methods are provided for sizing sand filters (Simplified Sizing Approach and Facility Modeling), both of which are based on Darcy's law:

$Q = KiA$

Where:

Q = water quality design flow (cfs)

K = hydraulic conductivity of the media (fps)

A = surface area perpendicular to the direction of flow (sf)

i = hydraulic gradient (ft/ft) for a constant head and constant media depth

$$i = \frac{h+L}{L}$$

Where:

*h* = average depth of water above the filter (ft), defined as d/2

d = maximum water storage depth above the filter surface (ft)

*L* = thickness of sand media (ft)

Although it is not seen directly, Darcy's law underlies both the simple and the modeling design methods. V, or more correctly, 1/V, is the direct input in the sand filter design. The relationship between V and K is revealed by equating Darcy's law and the equation of continuity, Q = VA. (Note: When water is flowing into the ground, V is commonly called the filtration rate. It is ordinarily measured via a soil infiltration test.)

Specifically:

Q = KiA and Q = VA so,

VA = KiA or V = Ki

Note that V ≠ K. The filtration rate is not the same as the hydraulic conductivity, but they do have the same units (distance per time). K can be equated to V by dividing V by the hydraulic gradient i, which is defined above. The hydraulic conductivity K does not change with head nor is it dependent on the thickness of the media, only on the characteristics of the media and the fluid. The hydraulic conductivity of 1 inch per hour ($2.315 \times 10^{-5}$ fps) used in this design is based on bench-scale tests of conditioned rather than clean sand. This design hydraulic conductivity represents the average sand bed condition as silt is captured and held in the filter bed. Unlike the hydraulic conductivity, the filtration rate V changes with head and media thickness, although the media thickness is constant in the sand filter design. Table 5.48 shows values of V for different water depths d (d = 2h).

**Table 5.48. Sand Filter Design Parameters.**

| | Sand Filter Design Parameters | | | | | |
|---|---|---|---|---|---|---|
| Facility ponding depth d (ft) | 1 | 2 | 3 | 4 | 5 | 6 |
| Filtration rate V (in/hr)[a] | 1.33 | 1.67 | 2.00 | 2.33 | 2.67 | 3.00 |
| 1/V (min/in) | 45 | 36 | 30 | 26 | 22.5 | 20 |

[a] The filtration rate is not used directly, but is provided for information. V equals the hydraulic conductivity, K, times the hydraulic gradient, i. The hydraulic conductivity used is 1 inch/hr. The hydraulic gradient = (h + L)/L, where h = d/2 and L = the sand depth (1.5 ft).

## Simplified Sizing Approach

The simplified sizing approach is taken from the *King County Surface Water Design Manual*. It uses standard values to define filter hydraulic characteristics for determining the sand surface area. This method is useful for planning purposes, for a first approximation to begin iterations

in the modeling method, or when use of a computer model is not desired or available. The simplified sizing method very often results in a larger filter than the modeling method. More robust calculation methods, using an approved continuous runoff model, may be used (refer to the following section on modeling method).

King County developed the simplified sizing approach to design sand filters that meet the required treatment volume without performing detailed modeling. Steps for the simplified sizing approach are summarized below.

- **Step 1: Determine maximum depth of water above sand filter**. This depth is defined as the depth at which water begins to overflow the reservoir pond, and it depends on site topography and hydraulic constraints. The depth is chosen by the designer.
- **Step 2: Determine site characteristics**. Determine the total number of hard surface acres and the total number of grass acres draining to the sand filter. Determine whether the site is on till or outwash soils.
- **Step 3: Calculate minimum required surface area for the sand filter**. Determine the sand filter area by multiplying the values in Table 5.49 by the site acreage from Step 2 using the following equation:

$$A_{sf} = 0.7(T_i A_i + T_{tg} A_{tg} + T_{og} A_{og})$$

Where:

$A_{sf}$ = sand filter area (sf)

0.7 = adjustment factor to account for routing effect on size

$T_{i,tg,og}$ = tributary area per soil/cover type (acres)

$A_{i,tg,og}$ = filter area per soil/cover type (sf/acre) from Table 5.49.

**Table 5.49. Sand Filter Area Increments for Various Soil and Cover Types.**

| Treatment Goal | Maximum Depth above Filter (ft) | Soil and Cover Types [filter area (sf) / tributary area (acre)] | | |
|---|---|---|---|---|
| | | $A_i$ Hard Surface | $A_t$ Till Grass | $A_{og}$ Outwash Grass |
| BASIC | 6 | 760 | 160 | 140 |
| | 3 | 1,140 | 240 | 210 |
| | 1 | 1,711 | 360 | 314 |
| LARGE | 6 | 1,179 | 279 | 250 |
| | 3 | 1,769 | 419 | 370 |
| | 1 | 2,654 | 629 | 550 |
| *Forested areas may be ignored. Vegetated areas other than grass may still be represented as grass for the simple sizing method, or the detailed routing method may be employed using actual cover types.* | | | | |

The values in Table 5.49 were derived as follows. Flows were estimated using the KCRTS model for one acre of the cover types selected in the table. Darcy's law ($Q = Ki\,A$) was then used to determine sand filter area using this flow $Q$, the hydraulic gradient $i$ for the various ponding depths given, and a hydraulic conductivity $k$ of 2.3 X $10^{-5}$ fps (1 inch/hr). The hydraulic gradient $i$ was calculated as $(h+l)/l$, where $h$ = the average depth of water above the filter, taken to be the ponding depth $d/2$, and $l$ = the thickness of the sand layer, which is 1.5 feet. The hydraulic conductivity represents a partially plugged sand condition found by bench-scale testing using successive trials with turbid water.

For depths between the values given in the table, areas can be interpolated. For depths outside the range presented in the table, the Facility Modeling method shall be used.

- **Step 4. Size the underdrain system.** The underdrain system is sized to convey the peak filtered flows to the outlet. Underdrains can be used in lieu of analyzing conveyance capacity for feeder pipes (refer to *Design Criteria* section). Strip drains, if used, shall be analyzed for conveyance per manufacturer's specifications.

The collector pipe (i.e., the pipe collecting flows from the rest of the underdrain system) shall be sized to convey the 2-year, 15-minute peak flow with 1 foot of head above the invert of the upstream end of the collector pipe.

**Intent:** The underdrain shall be able to remove standing water from beneath the sand. If standing water remains, the sand will remain saturated. This could cause oxygen depletion and reduced conditions in the sand, allowing some pollutants to become mobile and be released from the filter to downstream receiving waters.

Simple Method Sizing Example:

For a site with 2 acres of hard surface area and 2 acres of till grass draining to the sand filter, and 3 feet of head above the filter, the required sand area for a basic size sand filter would be as follows:

| Site Areas | | Values for Basic Size (from Table 5.49) | | |
|---|---|---|---|---|
| 2 acres | x | 1,140 sf/acre | = | 2,280 sf |
| + 2 acres | x | 240 sf/acre | = | 480 sf |
| | | | = | 2,760 sf |

Because the site is located in Seattle, the “regional scale factor (refer to Step 1) is 1.0. Multiply 2,760 square feet by the 0.7 adjustment factor (refer to Step 4).

2,760 sf x 1.0 x 0.7 = 1,930 sf

The required sand bed area is therefore 1,930 square feet.

Note: Find the total facility area by adding 3H:1V side slopes for the 3-foot ponding depth plus extra vertical height to convey the 100-year flow. If the total pond depth is 3.5 feet, the sand filter will require a total land area of (44 feet + 10.5 feet) x (44 feet + 10.5 feet) = 2.970 square feet, plus access and setback requirements.

## Modeling Approach

When using continuous modeling to size a sand filter, apply the assumptions listed in Table 5.50.

**Table 5.50. Sand Filter Design and Sizing Criteria.**

| Variable | Basic Sand Filter Basin | Large Sand Filter Basin | Sand Filter Vault | Linear Sand Filter |
|---|---|---|---|---|
| Precipitation Series | Seattle 158-year, 5-minute series | | | |
| Computational Time Step | 15-minutes | | | |
| Inflows to Facility | Continuous model output for applicable water quality design flow rate and volume | | | |
| Ponding Depth | Maximum water depth over the filter media | | | Maximum of 1 foot |
| Precipitation Applied to Facility | Yes | | No | Yes (grated cover), No (solid cover) |
| Evaporation Applied to Facility | Yes | | No | Yes (grated cover), No (solid cover) |
| Media depth | 18 inches or other as designed | | | Minimum of 12 inches of sand and 8 inches of drain rock |
| Sand Media Hydraulic Conductivity | 1 inch per hour | | | |
| Use Wetted Surface Area | Only if side slopes are 3H:1V or flatter | | No | No |

### 5.8.5.7. Minimum Construction Requirements

Refer to BMP T8.10 – Basic Sand Filter Basin, BMP T8.11 – Large Sand Filter Basin, BMP T8.20 – Sand Filter Vault, and BMP T8.30 – Linear Sand Filter in Volume V of the SWMMWW for sand filter minimum construction requirements.

### 5.8.5.8. Operations and Maintenance Requirements

Sand filter O&M requirements are provided in *Appendix G (BMP No. 15 and 16)*.

## 5.8.6. Wet Ponds

### 5.8.6.1. Description

Wet ponds are constructed stormwater ponds that retain a permanent pool of water (i.e., a wet pool or dead storage) at least during the wet season.

As an option, a shallow marsh area can be created within the permanent pool volume to provide additional treatment for nutrient removal. Peak control can be provided in the "live storage" area above the permanent pool.

### 5.8.6.2. Performance Mechanisms

The volume of the wet pool, which slows down the velocity of incoming stormwater, allows particulates and particulate-bound pollutants to settle and is a key factor in determining wet pond effectiveness. Biological uptake also acts as a secondary pollutant removal mechanism.

### 5.8.6.3. Applicability

Wet ponds can be applied to meet the requirements as summarized below. Wet ponds can be combined with detention storage to provide flow control (refer to *Section 5.8.9*).

| BMP | On-site | | Flow Control | | | Water Quality | | | | Conveyance |
|---|---|---|---|---|---|---|---|---|---|---|
| | List | Standard | Forest | Pasture | Peak | Basic | Enhanced | Oil Control | Phosphorus | |
| Basic Wet Pond | | | | | | ✓ | TT-B | | TT-A | ✓ |
| Large Wet Pond[a] | | | | | | ✓ | ✓ | | ✓ | ✓ |

TT-A = Treatment Train A (must be followed by a Basic Sand Filter or Sand Filter Vault (*Section 5.8.5*)

TT-B = Treatment Train B (must be followed by a Sand Filter or Sand Filter Vault (*Section 5.8.5*) or an approved Proprietary and Emerging Water Quality Treatment Technology (*Section 5.8.11*)

Refer to *Section 3.5.2.2* for more information on Two-BMP Treatment Trains

[a] A large wet pond requires a wet pool volume at least 1.5 times larger than for a basic wet pond.

### 5.8.6.4. Site Considerations

Site considerations for wet ponds are the same as those outlined for detention ponds under *Section 5.7.1.4*. Wet ponds require a larger area than a biofiltration swale or a sand filter, but can be integrated into the contours of a site fairly easily and function well for any size project.

Wet ponds work best when the water already in the pond is moved out en masse by incoming flows, a phenomenon called "plug flow". Because treatment works on this displacement principle, the wet pool storage of wet ponds may be provided below the groundwater level without interfering unduly with treatment effectiveness. However, if combined with a detention function, the live storage shall be above the seasonal high groundwater level.

Refer to Volume V of the SWMMWW for wet pond setback requirements.

### *5.8.6.5. Design Criteria*

Design criteria for wet ponds are generally the same as those outlined for detention ponds under *Section 5.7.1.5*. Some or all of the components may be used for a given application depending on the site characteristics and restrictions, pollutant loading, and design objectives. Design criteria are provided in this section or in Volume V of the SWMMWW for the following elements:

| Design Element | SWMMWW Design Criteria | Seattle-specific Design Criteria |
|---|---|---|
| Pond geometry | ✓ | ✓ |
| Berms and baffles | ✓ | Refer to Detention Ponds (*Section 5.7.1.5*) |
| Presettling Basin | ✓ | ✓ |
| Overflow structure | ✓ | Refer to Detention Ponds (*Section 5.7.1.5*) |
| Access | ✓ | Refer to Detention Ponds (*Section 5.7.1.5*) |
| Vegetation and Landscaping | ✓ | ✓ |
| Inlets and Outlets | ✓ | |

Refer to BMP T10.10 – Wet ponds in Volume V of the SWMMWW for wet pond design criteria. In addition to Ecology's criteria, the City has also developed specific design criteria for several design elements which are summarized below.

#### Pond Geometry

A wet pond typically consists of two cells that are separated by a baffle or a berm. A baffle is a vertical divider placed across the entire width of the pond, stopping short of the bottom. A berm is a vertical divider typically built up from the bottom, or if in a vault, connects all the way to the bottom.

Seattle specific requirements include the following:

- The full-length berm or baffle promotes plug flow and enhances quiescence and laminar flow through as much of the entire water volume as possible. Alternative methods to the full-length berm or baffle that provide equivalent flow characteristics may be approved on a case-by-case basis by the City.
- Sediment storage shall be provided in the first cell. The sediment storage shall have a minimum depth of 1 foot. A fixed sediment depth monitor shall be installed in the first cell to gauge sediment accumulation unless an alternative gauging method is proposed.
- The minimum depth of the first cell shall be 4 feet, exclusive of sediment storage requirements. The depth of the first cell may be greater than the depth of the second cell.
- Maximum pond depth (excluding sediment storage) shall not exceed 8 feet. Deep ponds (greater than 8 feet) may stratify during summer and create low oxygen conditions near the bottom resulting in re-release of phosphorus and other pollutants

back into the water. For wet pool depths in excess of 6 feet, it is recommended that some form of recirculation be provided in the summer, such as a fountain, aerator, or small amount of base flow, to prevent stagnation and low dissolved oxygen conditions.

- The ratio of flow path length to width from the inlet to the outlet shall be at least 3:1. The flow path length is defined as the distance from the inlet to the outlet, as measured at mid-depth. The width at mid-depth can be calculated as follows: width = (average top width + average bottom width)/2.
- Wet ponds with wet pool volumes less than or equal to 4,000 cubic feet may be single celled (i.e., no baffle or berm is required). However, it is especially important in this case that the flow path length be maximized. The ratio of flow path length to width shall be at least 4:1 in single celled wet ponds, but should preferably be 5:1. In addition, a gravity drain for maintenance shall be provided 12 to 18 inches from the pond bottom.

### Berms and Baffles

A berm or baffle shall extend across the full width of the wet pond and tie into the wet pond side slopes. Berm and baffle design criteria for wet ponds are the same as those outlined for detention ponds under *Section 5.7.1.5*.

### Presettling

Refer to BMP T6.10 – Presettling Basin in Volume V of the SWMMWW for presettling basin design criteria.

Additional presettling requirements for wet ponds installed in Seattle include:

- Provide 1 foot minimum sediment storage depth.
- Provide 1 foot minimum freeboard (above the design water surface elevation).
- If the runoff will be in direct contact with the soil, line the presettling basin in accordance with the provisions in *Appendix E*.
- Catch basins used for presettling shall be per City of Seattle Standard Plan No. 240, 241 or equivalent.

### Overflow Structure

Overflow structure design criteria for wet ponds are the same as those outlined for detention ponds under *Section 5.7.1.5*.

### Access

Access requirements for wet ponds are the same as those outlined for detention ponds under *Section 5.7.1.5*.

### Vegetation and Landscaping

Refer to BMP T10.10 – Wet ponds in Volume V of the SWMMWW for vegetation and landscaping requirements.

Additional vegetation and landscaping requirements for wet ponds installed in Seattle include:

- Exposed earth on the pond bottom and interior side slopes shall be sodded or seeded with an appropriate seed mixture. All remaining areas of the tract shall be vegetated or stabilized before the pond is put into operation.
- No trees or shrubs may be planted within 10 feet of inlet or outlet pipes or drainage structures such as spillways or flow spreaders. Species with roots that seek water, such as willow or poplar, shall be avoided within 50 feet of pipes or drainage structures.
- Shrubs that form a dense cover should be planted on slopes above the water quality design water surface on at least three sides. The purpose of planting is to discourage waterfowl use of the pond and to provide shading. *Appendix E* includes a plant list for wet pond peripheries.
- Planting is restricted on berms that impound water either permanently or temporarily during storms. Note: This restriction does not apply to cut slopes that form pond banks, only to berms.
    - Trees or shrubs may not be planted on portions of water-impounding berms taller than 4 feet high. Only grasses may be planted on berms taller than 4 feet.
    - Trees planted on portions of water-impounding berms less than 4 feet high shall be small, not higher than 20 feet mature height, and have a fibrous root system. Table 5.50 provides a list of small trees with these characteristics.
    - These trees reduce the likelihood of blow-down trees, or the possibility of channeling or piping of water through the root systems, which may contribute to structural failure on berms that retain water.
- All landscape material, including grass, shall be planted in topsoil of sufficient organic content and depth. Native underlying soils may be suitable for planting if amended per Soil Amendment BMP requirements in *Section 5.1*.
- Soil in which trees or shrubs are planted may require additional enrichment or additional compost top-dressing. Consult a certified arborist for site-specific recommendations.
- For a naturalistic effect, as well as ease of maintenance, trees or shrubs should be planted in clumps to form “landscape islands” rather than evenly spaced.
    - The landscaped islands shall be a minimum of 6 feet apart, and if set back from fences or other barriers, the setback distance should also be a minimum of 6 feet. Where tree foliage extends low to the ground, the 6 feet of setback should be counted from the outer drip line of the trees (estimated at maturity). This setback allows a 6-foot wide mower to pass around and between clumps.
- Evergreen trees and other trees that produce relatively little leaf-fall (such as Oregon ash, mimosa, or locust) are preferred.
- Trees should be set back so that branches do not extend over the pond (to prevent leaf-drop into the water).
- Drought tolerant species are recommended.

#### *5.8.6.6. BMP Sizing*

Refer to BMP T10.10 – Wet Ponds in Volume V of the SWMMWW for BMP Sizing considerations.

#### *5.8.6.7. Minimum Construction Requirements*

Refer to BMP T10.10 – Wet Ponds in Volume V of the SWMMWW for minimum construction requirements. Additional minimum construction requirements for wet ponds installed in Seattle are the same as those outlined for detention ponds under *Section 5.7.1.7*.

#### *5.8.6.8. Operations and Maintenance Requirements*

Wet pond O&M requirements are provided in *Appendix G (BMP No. 12)*.

## 5.8.7. Wet Vaults

### 5.8.7.1. Description

Wet vaults are drainage facilities that contain permanent pools of water that are filled during the initial runoff from a storm event. They are similar to wet ponds, except the wet pool is constructed below grade.

### 5.8.7.2. Performance Mechanisms

Wet vaults are designed to optimize water quality treatment by dissipating energy and providing retention time in order to settle out particulate pollutants. Being underground, the wet vault lacks the biological pollutant removal mechanisms, such as algae uptake, present in surface wet ponds. Wet vaults are believed to be ineffective in removing dissolved pollutants such as soluble phosphorus or metals, such as copper.

### 5.8.7.3. Applicability

A wet vault can be applied to meet the requirements as summarized below. Wet vaults can be combined with detention storage to provide flow control (refer to *Section 5.8.9*).

| | On-site | | Flow Control | | | Water Quality | | | | |
|---|---|---|---|---|---|---|---|---|---|---|
| **BMP** | **List** | **Standard** | **Forest** | **Pasture** | **Peak** | **Basic** | **Enhanced** | **Oil Control** | **Phosphorus** | **Conveyance** |
| Wet Vault | | | | | | ✓ | TT-A[a] or TT-B | | TT-B | ✓ |
| Wet Vault and API oil/water separator | | | | | | ✓ | | ✓ | | ✓ |

[a] The Media Filter media shall be of a nature that has the capability to remove dissolved metals effectively as approved by Ecology and accepted by the Director

TT-A = Treatment Train A (must be followed by Basic Sand Filter, Sand Filter Vault, or an approved Proprietary and Emerging Water Quality Treatment Technology (Section 5.8.11))

TT-B = Treatment Train B (must be followed by Basic Sand Filter or Sand Filter Vault)

### 5.8.7.4. Site Considerations

The following site considerations can help determine the feasibility of a wet vault for a particular site:

- While there are no specific setback requirements for wet vaults, vault location and vault material approval is required, and may require geotechnical analysis.
- Consider wet vaults where there are space limitations precluding the use of other treatment BMPs.
- Consider how the wet vault grates and access points fit within a site plan, including restrictions for safety considerations and restriction of pollutants entering through

grates. Grates are not to operate as inlets. Generally, the surrounding area should be sloped away from grates.

- Consider how access will be provided for vactor trucks for sediment removal

Additional site considerations may apply depending on site conditions and other factors.

### *5.8.7.5. Design Criteria*

As with wet ponds, the primary design factor that determines the removal efficiency of a wet vault is the volume of the facility. The larger the volume, the higher the potential for pollutant removal. Performance is also improved by avoiding dead zones (like corners) where little exchange occurs, using large length-to-width ratios, dissipating energy at the inlet, and ensuring that flow rates are uniform to the extent possible and not increased between cells.

The methods for designing the wet vault are identical to the methods for designing wet ponds. The following provides a description and requirements for the components of wet vaults. Typical design details and concepts for the wet vault are shown in Figure 5.26. Some or all of the components may be used for a given application depending on the site characteristics and restrictions, pollutant loading, and design objectives. Design criteria are provided in this section for the following elements:

- Wet vault geometry
- Wet vault configuration
- Inlet, outlet and bypass, if used
- Modifications if combining with a baffle oil/water separator
- Modifications if combining with detention
- Access to cells for maintenance
- Structural requirements

#### Wet Vault Geometry

The minimum flow length-to-width ratio is 3:1. A greater ratio is desirable. The inlet and outlet should be at opposing corners of the vault to increase the flow path, if possible. Wet pool depths for vaults are the same as specified for wet ponds except for the following modifications:

- The sediment storage shall average 1 foot.
- The depth above sediment storage to the water quality design water surface shall be a minimum of 4 feet deep since planting cannot be used to prevent resuspension of sediment in shallow water (as it can in open ponds) and to provide for a submerged inlet.
- The maximum depth from finished grade to the vault invert shall be 17 feet to allow for removing sediment by vactor.

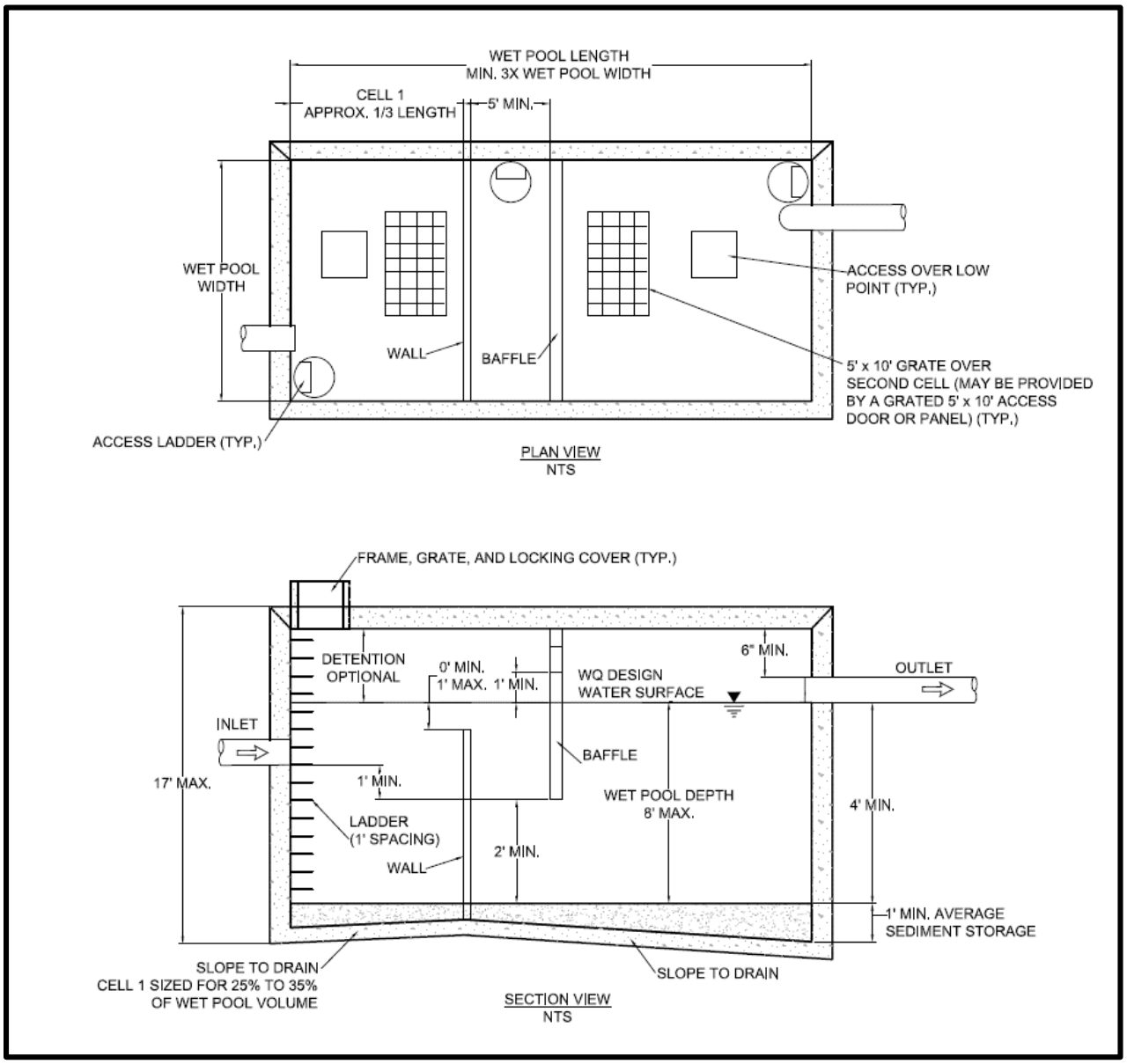


**Figure 5.26. Typical Wet Vault.**

## Wet Vault Configuration

The vault shall be separated into three cells by a wall and a baffle (baffle can be removable). The following criteria apply:

- A wall shall be placed at approximately one-third of the wet vault length.
- The wall height shall be set no higher than the water quality design water surface, and no lower than 1 foot below.
- A baffle shall be placed downstream of the wall, with a minimum distance between the wall and the baffle of 5 feet.

- The baffle shall extend from a minimum of 1 foot above the water quality design water surface to a minimum of 1 foot below the invert elevation of the inlet pipe.
- The lowest point of the baffle shall be a minimum of 2 feet from the bottom of the vault, and greater if feasible.

Note: If the vault is less than 2,000 cubic feet (inside dimensions), the vault may be one-celled.

### Inlet, Outlet and Bypass

The following criteria apply to inlets, outlets, and bypasses:

- The number of inlets to the wet vault should be limited, and the flow path length shall be maximized from inlet to outlet for all inlets to the vault.
- The inlet to the wet vault shall be submerged with the inlet pipe invert a minimum of 3 feet from the vault bottom (not including sediment storage). The top of the inlet pipe should be submerged at least 1 foot, if possible.

The submerged inlet is to dissipate energy of the incoming flow. The distance from the bottom is to minimize resuspension of settled sediments. Alternative inlet designs that accomplish these objectives are acceptable.

- Unless designed as an off-line facility, the capacity of the outlet pipe and available head above the outlet pipe shall be designed to convey the design flow for developed site conditions with a 1 percent annual probability (100-year recurrence) without overtopping the vault. The available head above the outlet pipe shall be a minimum of 6 inches.
- In single cell wet vaults (without a baffle), the outlet pipe shall be back-sloped or have a tee section, the lower arm of which shall extend 1 foot below the water quality design water surface to provide for trapping of oils and floatables in the vault.
- In a combination wet vault with detention, the outlet pipe shall have a flow control riser tee that extends a minimum of 2 feet below the water quality design water surface.
- Where pipes enter and leave the vault they shall be watertight.
- Valved and piped bypass of flows for maintenance is preferred. This isolates the wet vault for safe entry, prevents resuspension of particle pollutants during a cleaning operation, and manages the volume of water for disposal during cleaning.

### Modifications if Combining with a Baffle Oil/Water Separator

If the project site is a high-use site and a wet vault is proposed, the vault may be combined with a baffle oil/water separator to meet the water quality treatment requirements with one facility rather than two. Structural modifications and added design criteria are provided below. However, the maintenance requirements for baffle oil/water separators shall be adhered to, in addition to those for a regular wet vault. This will result in more frequent inspection and cleaning than for a wet vault. Refer to *Section 5.8.10.8* for information on maintenance of baffle oil/water separators.

The sizing procedures for the baffle oil/water separator (*Section 5.8.10.6*) shall be run as a check to ensure the vault is large enough. If the oil/water separator sizing procedures result in a larger vault size, increase the wet vault size to match.

An oil retaining baffle shall be provided near the vault outlet. The baffle shall not contain a high-flow overflow, or else the retained oil will be washed out of the vault during large storms.

Additional design criteria for a combined wet vault with baffle oil/water separator are as follows:

- The vault shall have a minimum length-to-width ratio of 5:1.
- The vault shall have a design water depth-to-width ratio of between 1:3 to 1:2.
- The vault shall be watertight and shall be coated to protect from corrosion.
- Separator vaults shall have a shutoff mechanism on the outlet pipe to prevent oil discharges during maintenance and to provide emergency shut-off capability in case of a spill. A valve box and riser shall also be provided.
- Wet vaults used as oil/water separators shall be off-line and shall bypass flows greater than the off-line water quality design flow (i.e., the water quality design flow multiplied by the off-line factor of 3.0.

This design minimizes the entrainment and/or emulsification of previously captured oil during very high flow events.

### Modifications if Combining with Detention

The design criteria for detention vaults and wet vaults shall both be met, with the exception of the modifications included in BMP T10.40 – Combined Detention and Wetpool Facilities in Volume V of the SWMMWW.

### Access to Cells for Maintenance

Refer to the access criteria listed under Detention Vaults (*Section 5.7.3.5*). Access shall be provided to allow personnel to enter and provide emergency egress from all cells of a wet vault using the following criteria:

- For vaults with greater than 1,250 square feet of floor area, a 5-foot by 10-foot removable panel shall be provided over the inlet pipe (instead of a standard frame, grate and solid cover). Alternatively, a separate access vault may be provided.
- For vaults under roadways, the removable panel shall be located outside the travel lanes. Alternatively, multiple standard locking maintenance hole covers may be provided. Removable panels shall be at grade, have stainless steel lifting eyes, and weigh no more than 5 tons per panel.
- All access openings, except those covered by removable panels, shall have round, solid locking lids, or 3-foot square, locking covers.
- Vaults with widths 10 feet or less shall have removable lids.
- Internal structural walls of large vaults shall be provided with separate access risers or openings sufficient for maintenance access between cells.

### Structural Requirements

Wet vaults shall conform with the "Materials" and "Structural Stability" criteria specified for detention vaults in *Section 5.7.3.5*.

Additional structural design criteria for a combined wet vault with baffle oil/water separator are as follows:

- The vault floor shall be sloped to drain to access points with the intent to allow flushing to vactor points for sediment removal.
- A minimum of 50 square feet of grate shall be provided over each cell. For vaults in which the surface area of the second cell is greater than 1,250 square feet, 4 percent of the top shall be grated. This requirement may be met by one grate or by many smaller grates distributed over the second cell area. Note: a grated access door can be used to meet this requirement.

The grate allows air contact with the wet pool in order to minimize stagnant conditions which can result in oxygen depletion, especially in warm weather.

- All metal parts shall be corrosion-resistant. Galvanized materials shall not be used since galvanized metal contributes zinc to stormwater, sometimes in very high concentrations. Grates shall be coated for corrosion resistance with elastomeric epoxy or marine paint without zinc.
- The cells of a wet vault shall not be divided into additional subcells by internal walls. If internal structural support is needed, it is preferred that post and pier construction be used to support the vault lid rather than walls. Any walls used within cells shall be positioned so as to lengthen, rather than divide, the flow path.

Treatment effectiveness in wet pool facilities is related to the extent to which plug flow is achieved and short-circuiting and dead zones are avoided. Structural walls placed within the cells can interfere with plug flow and create significant dead zones, reducing treatment effectiveness.

### *5.8.7.6. BMP Sizing*

Refer to wet ponds *(Section 5.8.6.6)* for BMP Sizing information.

### *5.8.7.7. Minimum Construction Requirements*

Refer to the construction-related issues outlined above as part of the design criteria. Additional construction requirements include:

- Vault floor shall be sloped to drain.
- Exfiltration or infiltration testing is required. Contractor shall propose a test method.
- All sediment shall be removed at the end of construction.

### *5.8.7.8. Operations and Maintenance Requirements*

Wet vault O&M requirements are provided in *Appendix G (BMP No. 13)*.

## 5.8.8. Stormwater Treatment Wetlands

### 5.8.8.1. Description

Stormwater treatment wetlands are similar to wet ponds, but also provide a shallow marsh area to allow the establishment of emergent wetland aquatic plants, which improves pollutant removal.

### 5.8.8.2. Performance Mechanisms

Stormwater treatment wetlands remove sediment, metals, and pollutants that bind to humic or organic acids primarily through settling and biological uptake. Secondary performance mechanisms include filtration and soil adsorption. Phosphorus removal in stormwater wetlands is highly variable, so stormwater treatment wetlands are not expected to provide phosphorus control.

In land development situations, wetlands are usually constructed for two main reasons: to replace or mitigate impacts when natural wetlands are filled or impacted by development (mitigation wetlands) and to treat stormwater runoff (stormwater treatment wetlands). Mitigation wetlands may not be used as stormwater treatment facilities, because stormwater treatment functions are not compatible with normal wetland function.

### 5.8.8.3. Applicability

A stormwater treatment wetland can be applied to meet the requirements as summarized below. Stormwater treatment wetlands can be combined with detention storage to provide flow control (refer to *Section 5.8.9*).

| | On-site | | Flow Control | | | Water Quality | | | | |
|---|---|---|---|---|---|---|---|---|---|---|
| **BMP** | **List** | **Standard** | **Forest** | **Pasture** | **Peak** | **Basic** | **Enhanced** | **Oil Control** | **Phosphorus** | **Conveyance** |
| Stormwater treatment wetland | | | | | | ✓ | ✓ | | TT-A | ✓ |

TT-A = Treatment Train A (must be followed by a Basic Sand Filter or Sand Filter Vault (*Section 5.8.5*).

Refer to *Section 3.5.2.2* for more information on Two-BMP Treatment Trains.

### 5.8.8.4. Site Considerations

Refer to BMP T10.30 – Stormwater Treatment Wetlands in Volume V of the SWMMWW for site considerations. Additional site considerations may apply depending on site conditions and other factors. Refer to Volume V of the SWMMWW for stormwater treatment wetland setback requirements.

### 5.8.8.5. Design Criteria

The following provides a description and requirements for the components of stormwater treatment wetlands. Some or all of the components may be used for a given application

depending on the site characteristics and restrictions, pollutant loading, and design objectives. Design criteria are provided in this section or in Volume V of the SWMMWW for the following elements:

| Design Element | SWMMWW Design Criteria | Seattle-specific Design Criteria |
|---|---|---|
| Inlets and outlets | ✓ | ✓ |
| Geometry | ✓ | |
| Lining requirements | ✓ | |
| Access | ✓ | |
| Planting | ✓ | |

Refer to BMP T10.30 – Stormwater Treatment Wetlands Volume V of the SWMMWW for design criteria. In addition to Ecology's criteria, the City has also developed specific design criteria for inlets and outlets which are summarized below.

### Inlets and Outlets

Refer to Wet Ponds (*Section 5.8.6.5*) for inlet and outlet requirements.

The following additional requirements apply to Stormwater Treatment Wetlands installed in Seattle:

- Inlets and outlets shall be placed to maximize the flow path through the facility. The ratio of flow path length to width from the inlet to the outlet shall be at least 3:1. The flow path length is defined as the distance from the inlet to the outlet, as measured at mid-depth. The width at mid-depth can be calculated as follows: width = (average top width + average bottom width)/2.
- To the extent possible create a complex microtopography within the wetland. Design the flow path to maximize sinuous flow between wetland cells.

## *5.8.8.6. BMP Sizing*

Refer to BMP T10.30 – Stormwater Treatment Wetlands in Volume V of the SWMMWW for BMP sizing.

## *5.8.8.7. Minimum Construction Requirements*

Construction requirements are the same as for Wet Ponds (*Section 5.8.6.7*).

## *5.8.8.8. Operations and Maintenance Requirements*

Stormwater treatment wetland O&M requirements are provided in *Appendix G (BMP No. 14)*.

## 5.8.9. Combined Detention and Wet Pool Facilities

### 5.8.9.1. Description

Combined detention and water quality wet pool facilities have the appearance of a detention facility but contain a permanent pool of water as well. The following design procedures, requirements, and recommendations cover differences in the design of the stand-alone water quality facility when combined with detention storage. Site considerations, setbacks, and other typical siting and design considerations for combined facilities are the same as specified for each individual facility, unless noted below. The following combined facilities are addressed in this section:

- Detention/wet pond (basic and large)
- Detention/wet vault
- Detention/stormwater wetland.

There are two sizes of the combined wet pond, a basic and a large, but only a basic size for the combined wet vault and combined stormwater wetland. The facility sizes (basic and large) are related to the treatment performance goals (refer to *Section 3.5.2*).

### 5.8.9.2. Performance Mechanisms

The intent of a combined detention and wet pool facility is to provide water quality treatment in addition to flow control. The three types of combined facilities provide water quality treatment as follows:

- A combined detention/wet pond provides pollutant removal via settling and biological uptake.
- A combined detention/wet vault provides pollutant removal via settling.
- A combined detention/stormwater wetland provides pollutant removal via settling, biological uptake, filtration, and soil adsorption.

### 5.8.9.3. Applicability

Combined detention and wet pool facilities can be applied to meet the requirements as summarized below.

| BMP | On-site | | Flow Control | | | Water Quality | | | | Conveyance |
|---|---|---|---|---|---|---|---|---|---|---|
| | List | Standard | Forest | Pasture | Peak | Basic | Enhanced | Oil Control | Phosphorus | |
| Combined detention and wet pond | | | ✓ | ✓ | ✓ | ✓ | TT-B | | TT-A | ✓ |
| Combined detention and wet vault | | | ✓[a] | ✓[a] | ✓[a] | ✓ | TT-B | | TT-A | ✓ |
| Combined detention and stormwater wetland | | | ✓ | ✓ | ✓ | ✓ | TT-B | | TT-A | ✓ |

[a] Standard may be partially or completely achieved depending upon contributing area and minimum orifice size.

TT-A = Treatment Train A (must be followed by a Basic Sand Filter or Sand Filter Vault (*Section 5.8.5*)

TT-B = Treatment Train B (must be followed by a Basic Sand Filter or Sand Filter Vault (*Section 5.8.5*) or an approved Proprietary and Emerging Water Quality Treatment Technology (*Section 5.8.11*)

Refer to Section 3.5.2.2 for more information on Two-BMP Treatment Trains.

### *5.8.9.4. Site Considerations*

Refer to BMP T10.40 – Combined Detention and Wet Pool Facilities in Volume V of the SWMMWW for site considerations and setback requirements. Additional site considerations may apply depending on site conditions and other factors.

### *5.8.9.5. Design Criteria*

Refer to BMP T10.40 – Combined Detention and Wetpool Facilities in Volume V of the SWMMWW for design criteria.

#### Combined Detention and Wet Vault

The design criteria for detention vaults and wet vaults shall both be met, except the modifications included in BMP T10.40 – Combined Detention and Wetpool Facilities in Volume V of the SWMMWW.

#### Combined Detention and Stormwater Wetland

The design criteria for detention ponds and stormwater wetlands shall both be met, except the modifications included in BMP T10.40 – Combined Detention and Wetpool Facilities in Volume V of the SWMMWW.

### *5.8.9.6. BMP Sizing*

Refer to BMP T10.40 – Combined Detention and Wetpool Facilities in Volume V of the SWMMWW for BMP sizing.

### *5.8.9.7. Minimum Construction Requirements*

Construction requirements are the same as for Wet Ponds (*Section 5.8.6.7*).

#### *5.8.9.8. Operations and Maintenance Requirements*

Detention and wet pool O&M requirements are provided in *Appendix G (BMP No. 1, No. 3, No. 12, No. 13. and No. 14)*.

## 5.8.10. Oil/Water Separators

### 5.8.10.1. Description

Oil/water separators rely on passive mechanisms that take advantage of oil being lighter than water. Oil rises to the surface and can be periodically removed. The two types of oil/water separators typically used for stormwater treatment described in this section are the baffle type or American Petroleum Institute (API) oil/water separator and the coalescing plate (CP) oil/water separator:

1. **Baffle type separator (API)**: Baffle (API) oil/water separators use vaults that have multiple cells separated by baffles extending down from the top of the vault. The baffles block oil flow out of the vault. Baffles are also commonly installed at the bottom of the vault to trap solids and sludge that accumulate over time. In many situations, simple floating or more sophisticated mechanical oil skimmers are installed to remove the oil once it has separated from the water.
2. **Coalescing plate (CP) separator**: CP separators are typically manufactured units consisting of a baffled vault containing several inclined corrugated plates stacked and bundled together. The plates are equally spaced (typical plate spacing ranges from 0.25 to 1 inch) and are made of a variety of materials, the most common being fiberglass and polypropylene. Efficient separation results because the plates reduce the vertical distance oil droplets shall rise in order to separate from the stormwater. Once they reach the plate, oil droplets form a film on the plate surface. The film builds up over time until it becomes thick enough to migrate upward along the inclined plate. When the film reaches the edge of the plate, oil is released as large droplets which rise rapidly to the surface, where the oil accumulates until the unit is maintained. Because the plate pack increases treatment effectiveness significantly, CP separators can achieve a specified treatment level with a smaller vault size than a simple baffle separator.

### 5.8.10.2. Performance Mechanisms

Oil/water separators are designed to remove free oil and are not generally effective in removing oil that has become either chemically or mechanically emulsified or dissolved in the stormwater.

### 5.8.10.3. Applicability

Oil/water separators can be applied to meet the requirements listed below.

| BMP | On-site | | Flow Control | | | Water Quality | | | | Conveyance |
|---|---|---|---|---|---|---|---|---|---|---|
| | List | Standard | Forest | Pasture | Peak | Basic | Enhanced | Oil Control | Phosphorus | |
| API oil/water separator | | | | | | | | ✓ | | |
| CP oil/water separator | | | | | | | | ✓ | | |

API oil/water separators are not effective in removing low concentrations of oil, and therefore, are not recommended for use on sites with very dilute concentrations of TPH. Other stormwater facilities, such as sand filters, biofiltration swales, and emerging water quality treatment technologies may be more applicable under these conditions. Linear sand filters are also approved for oil control (refer to *Section 5.8.5*). Spill control separators are often used as a source control BMP, but are not permitted as a stormwater treatment oil control BMP. Refer to *Volume 4, Source Control* for additional details on spill prevention and control.

#### *5.8.10.4. Site Considerations*

The following considerations can influence the feasibility of API oil/water separators for a particular site:

- Oil/water separators shall be installed upstream of other water quality treatment BMPs (except wet vaults), pumps, and conveyance structures that introduce turbulence.
- Oil/water separators may be located upstream or downstream of flow control BMPs.
- Oil/water separators shall be located off-line and bypass the incremental portion of flows that exceed the off-line water quality design flow rate (refer to *Section 4.2.1*). If it is not possible to locate the separator off-line (e.g., roadway intersections), try to minimize the size of the area requiring oil control, and use the on-line water quality design flow rate (refer to *Section 4.2.1*).
- Oil/water separators shall not be used for removal of dissolved or emulsified materials such as coolants, soluble lubricants, glycols (anti-freeze), and alcohols.
- Oil/water separators are best located in areas where the contributing drainage area is nearly all impervious and a fairly high load of TPH is likely to be generated.
- Excluding unpaved areas helps to minimize the amount of sediment entering the vault, which reduces the need for maintenance. Pretreatment should be considered if the level of TSS in the inlet flow would cause clogging or otherwise impair the long-term efficiency of the separator.

The following considerations can influence the feasibility of CP separators for a particular site:

- CP separators are typically smaller than API separators and are suitable for sites where space is limited.
- CP separator designs may be required to add pretreatment for TSS that could cause clogging of the CP separator, or otherwise impair the long-term effectiveness of the separator.
- Typical applications of CP oil/water separators include inflows from small contributing drainage areas (fueling stations, maintenance shops, etc.) due to space limitations. However, if plugging of the plates is likely, then a new design basis for the baffle type API separator may be considered on an experimental basis.

Additional site considerations may apply depending on site conditions and other factors.

### *5.8.10.5. Design Criteria*

The following provides a description and requirements for the components of oil/water separators. Some or all of the components may be used for a given application depending on the site characteristics and restrictions, pollutant loading, and design objectives. Design criteria are provided in this section for the following elements:

- Vault geometry
- Vault structure
- Baffles
- Separator plates
- Material requirements
- Inlet and outlet
- Access

Note: The following criteria apply to both API baffle and CP separators, unless otherwise specified.

#### Vault Geometry

Oil/water separator vaults are typically divided in three compartments: a forebay, an oil separation cell, and an afterbay:

- The length of the forebay shall be a minimum of 0.33 the length of the vault (L), but 0.5 L is recommended.
- The surface area of the forebay shall be at least 20 square feet per 10,000 square feet of tributary impervious area draining to the separator.
- The forebay is designed primarily to trap and collect sediment and debris, support plug flow conditions, and reduce turbulence.
- The oil separation cell traps and holds oil as it rises from the water column, and it serves as a secondary sediment collection area.
- The afterbay provides a relatively oil-free cell before the outlet and provides a secondary oil separation area.

The following criteria apply specifically to API separator bay vaults (Figure 5.27):

- The design water depth shall be no deeper than 8 feet unless approved by the Director. Depths greater than 8 feet may be permitted on a case-by-case basis, taking into consideration the potential for depletion of oxygen in the water during the warm summer months.
- Baffle separator vaults shall have a minimum length-to-width ratio of 5:1.
- Baffle separator vaults shall have a design water depth-to-width ratio of between 0.3 and 0.5.

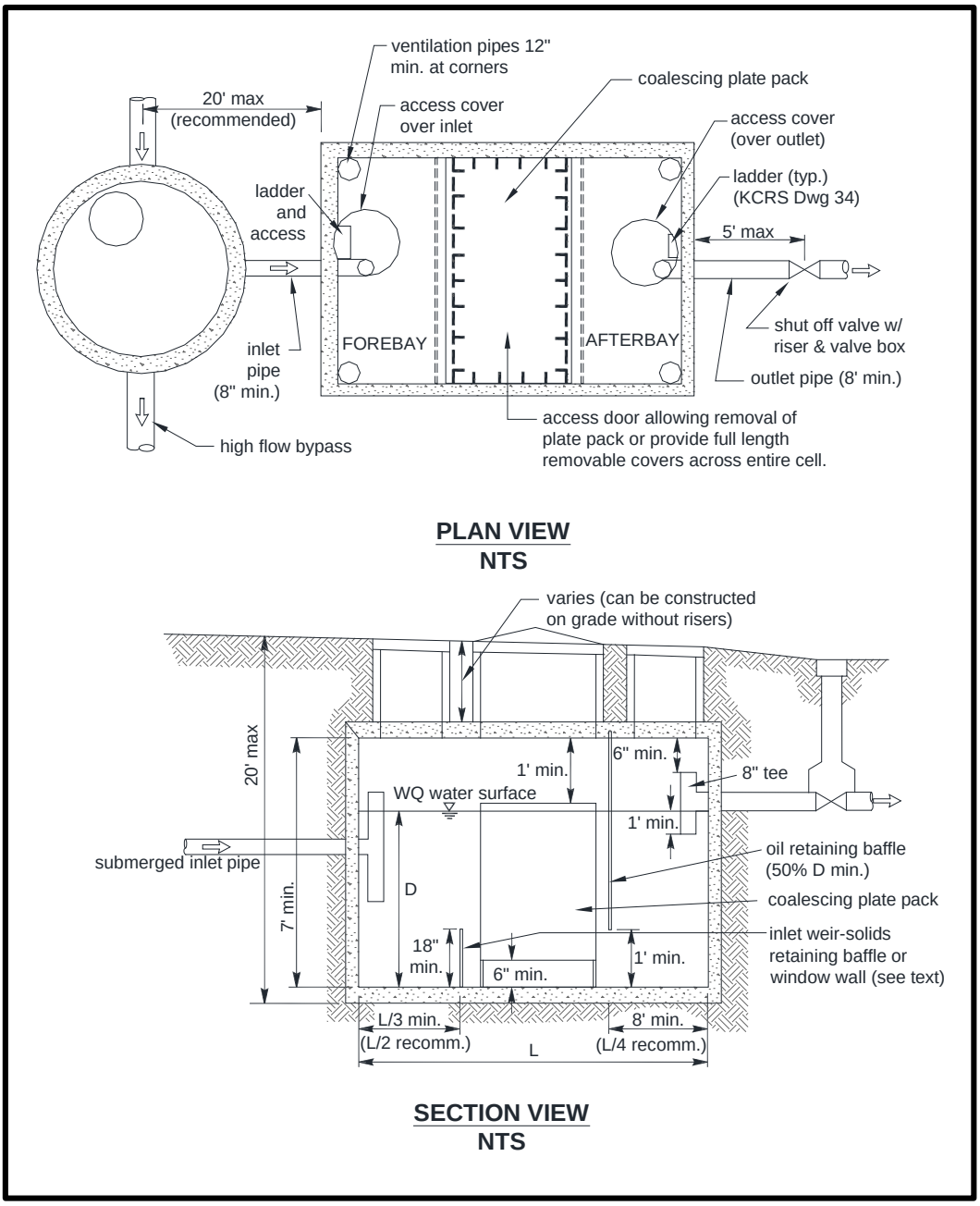


**Figure 5.27. Typical API (Baffle Type) Separator.**

The following criteria apply specifically to CP separators (Figure 5.28):

- In lieu of an attached forebay, a separate grit chamber, sized to be at least 20 square feet per 10,000 square feet of tributary impervious area, may precede the oil/water separator.

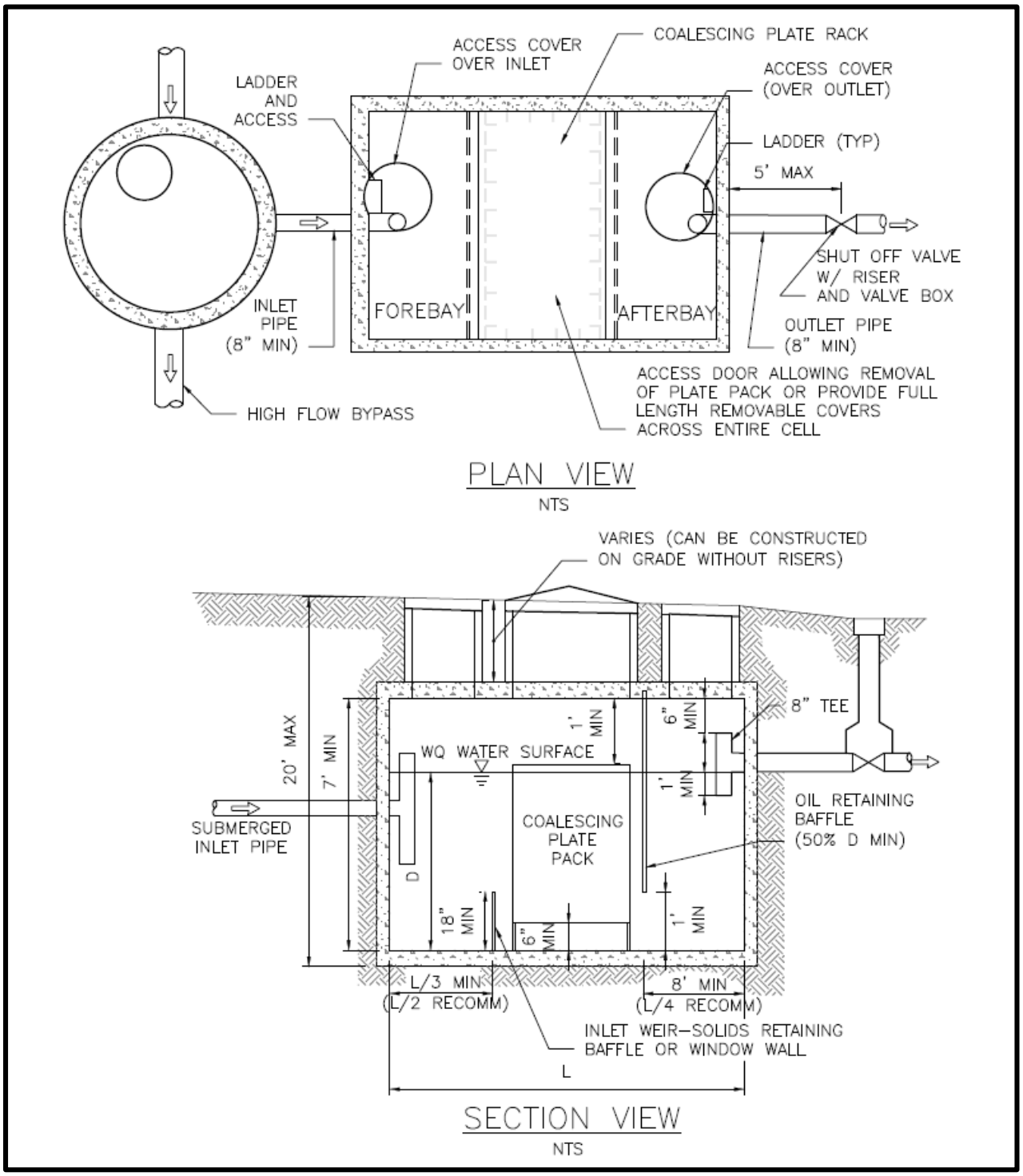


**Figure 5.28. Typical Coalescing Plate Separator.**

## Vault Structure

The following criteria apply to both API and CP separator bays:

- Separator vaults shall be watertight.

- Separator vaults shall have a shutoff mechanism on the outlet pipe to prevent oil discharges during maintenance and to provide emergency shutoff capability in the event of a spill. A valve box and riser shall be provided.
- Roughing screens for the forebay or upstream of the separator to remove debris, should be used if needed. Screen openings should be approximately 0.75 inch.
- A gravity drain for maintenance is recommended if grade allows. The drain invert should be at a depth equal to the depth of the oil retaining baffle. Deeper drains are encouraged where feasible.
- If large amounts of oil are likely to be captured, a bleed-off pipe and separate waste oil tank can be located adjacent to the vault to channel separated oils into the tank. This improves the overall effectiveness of the facility, especially if maintenance is only performed annually. It also improves the quality of the waste oil recovered from the facility.
- Absorbents and/or skimmers should be used in the afterbay.

### Baffles

The following criteria apply specifically to API separator bay vaults:

- A removable flow-spreading baffle, extending from the surface to a depth of up to half of the vault depth (D) is recommended to spread flows. Design guidelines for level spreaders are provided in *Appendix E*.
- A removable oil retaining baffle shall be provided and located approximately one-quarter of the distance from the outlet wall or a minimum of 8 feet, whichever is greater (the 8-foot minimum is for maintenance purposes). The oil-retaining baffle shall extend from the elevation of the water surface to a depth of at least 50 percent of the design water depth and at least 1 foot from the separator bottom. Various configurations are possible, but the baffle shall be designed to minimize turbulence and entrainment of sediment.
- The removable bottom baffle (sediment-retaining baffle) shall be a minimum of 24 inches, and located at least 1 foot from the oil-retaining baffle. A "window wall" baffle may be used, but the area of the window opening shall be at least three times greater than the area of the inflow pipe.
- Baffles may be fixed rather than removable if additional entry ports and ladders are provided so that both sides of the baffle are accessible by maintenance crews.
- Baffle height to water depth ratios should be 0.85 for top baffles and 0.15 for bottom baffles.

The following criteria apply specifically to CP separators:

- An oil-retaining baffle shall be provided. For large units, a baffle position of one-quarter of the distance from the outlet wall is recommended. The oil-retaining baffle shall extend from the water surface to a depth of at least 50 percent of the design water depth and at least 1 foot from the separator bottom. Various configurations are

possible, but the baffle shall be designed to minimize turbulence and entrainment of sediment.

- A bottom sediment-retaining baffle shall be provided upstream of the plate pack. The minimum height of the sludge-retaining baffle shall be 18 inches. Window walls may be used, but the window opening shall be a minimum of three times greater than the area of the inflow pipe.

### Coalescing Plate Separators

The following criteria apply specifically to CP separators:

- Plates shall be inclined at 45 to 60 degrees from the horizontal. This range of angles exceeds the angle of repose of many solids, and therefore, provides more effective droplet separation while minimizing the accumulation of solids on the individual plates.
- Plates shall have a minimum spacing of 0.5-inch and have corrugations.
- Plates shall be securely bundled in a plate pack for ease of removal and cleaning (with high-pressure rinse or equivalent).
- The plate pack shall be a minimum of 6 inches from the vault bottom for sediment storage.
- There should be 1 foot of head space between the top of the plate pack and the bottom of the vault cover.

### Material Requirements

The following guidelines apply when selecting oil/water separator materials:

- Vault baffles shall be concrete, stainless steel, fiberglass reinforced plastic, or another acceptable material, and shall be securely fastened to the vault.
- The following criteria applies specifically to CP separators:
  - Plate packs shall be made of fiberglass, stainless steel, or polypropylene, unless otherwise recommended by the manufacturer and approved by the Director.
  - The entire space between the sides of the plate pack and the vault wall shall be filled with a solid but light-weight removable material such as a plastic or polyethylene foam to reduce short-circuiting around the plate pack. Rubber flaps are not effective for this purpose.

### Inlet and Outlet

The following inlet and outlet criteria apply to both types of oil/water separators:

- The separator inlet shall be submerged. A tee section may be used to submerge the incoming flow and shall be at least 2 feet from the bottom of the tank and extend above the water quality design water surface.
- The submerged inlet is to dissipate energy of the incoming flow. The distance from the bottom is to minimize resuspension of settled sediments. Extending the tee to the

surface allows air to escape the flow, thus, reducing turbulence. Alternative inlet designs that accomplish these objectives are acceptable.

- The vault outlet pipe shall be sized to pass the water quality design flow before overflow. The vault outlet pipe shall be back-sloped or have a tee extending 1 foot above and below the water quality design water surface to provide for secondary trapping of oils and floatables in the wet vault. Note: The invert of the outlet pipe sets the water quality design water surface elevation.

### Access Requirements

Access requirements are the same as for wet vaults (*Section 5.8.7.5*).

The following access requirements also apply for CP separators:

- Access to the compartment containing the plate pack shall be a removable panel or other access able to be opened wide enough to remove the entire coalescing plate bundle from the cell for cleaning or replacement. Doors or panels shall have stainless steel lifting eyes, and panels shall weigh no more than 5 tons per panel.
- A parking area or access pad (25-foot by 15-foot minimum) shall be provided near the coalescing plate bundles to allow for their removal from the vault by a truck-mounted crane or backhoe, and to allow for extracting accumulated solids and oils from the vault using a vactor truck.

## *5.8.10.6. BMP Sizing*

For off-line separators, the high flow bypass shall be designed so that all flows up to and including the water quality design flow rate are directed to the separator. Design guidelines for flow splitters are provided in *Appendix E*. The water quality design flow rate is calculated by multiplying the design flow rate determined using an approved continuous simulation model by the off-line ratio of 3.0. For on-line separators, the water quality design flow rate is calculated by multiplying the flow rate determined using an approved continuous simulation model by the on-line ratio of 1.65. Separators shall be designed as off-line facilities wherever possible.

The API and CP sizing method is based on the horizontal velocity of the bulk fluid (Vh), the oil rise rate (Vt), the residence time (tm), width, depth, and length considerations as follows:

1. Determine the oil rise rate, Vt, in cm/sec, using Stokes' Law (Water Pollution Control Federation 1985) or empirical determination. Stokes Law assumes that flow is laminar and that oil droplets are spherical shaped. Stokes Law equation for rise rate, Vt (ft/min):

$$Vt = 1.97g(\sigma_w-\sigma_o)D^2 /18\eta_w)$$

Where:

1.97 = conversion factor (cm/sec to ft/min)
g = gravitational constant (981 cm/sec²)
D = diameter of the oil particle (cm)

$\sigma_w$ = water density in grams per cubic centimeter (gm/cc) at 32°F
$\sigma_o$ = oil density
$\eta_w$ = dynamic viscosity of water (gm/cm-sec) at water temperature of 32°F, (Refer to American Petroleum Institute 1990)

Use:

g = 981 cm/sec²
D = 60 microns (0.006 cm)
$\sigma w$ = 0.999 gm/cc at 32°F
$\sigma o$ = Select conservatively high oil density. For example, if diesel oil @ $\sigma o$=0.85 gm/cc and motor oil @ $\sigma o$ = 0.90 gm/cc can be present then use $\sigma o$=0.90 gm/cc
$\eta w$ = 0.017921 gm/cm-sec

2. Determine Q:

Q = the 15-minute Water Quality design flow rate in ft³/min multiplied by the off-line facility ratio of 3.0. Note that some continuous hydrologic models give the water quality design flow rate in ft³/sec. Multiply this flow rate by 60 to obtain the flow rate in ft³/min.

3. Calculate horizontal velocity of the bulk fluid, Vh (in ft/min) and water depth in separator (d) in feet.

$V_h = 15Vt$
$d = (Q/2V_h)^{1/2}$

Note: Separator water depth (d) shall be: $3 \leq d \leq 8$ feet to minimize turbulence (American Petroleum Institute 1990; US Army Corps of Engineers 1994). If the calculated depth is less than 3 feet, an API separator is not appropriate for the site. If the calculated depth exceeds 8 feet, consider using two separators.

4. Calculate the minimum residence time (tm), in minutes, of the separator at depth d:

$t_m = d/V_t$

5. Calculate the minimum length of the separator section, l(s):

$l(s) = FQt_m/wd = F(V_h/V_t)d$

Where:

F = 1.65
Use depth/width (d/w) ratio of 0.5 (American Petroleum Institute 1990)

For other dimensions, including the length of the forebay, the length of the afterbay, and the overall length, L; refer to Figure 5.28.

6. Calculate V = l(s)wd = FQtm, and Ah = wl(s)

$V$ = minimum hydraulic design volume, in cubic feet
$A_h$ = minimum horizontal area of the separator, in square feet.

CP separators follow the same sizing method as API separators. Calculate the projected (horizontal) surface area of plates needed using the following equation:

$$A_p = Q/V_t = Q/0.00386(\sigma_w - \sigma_o/\eta_w)$$

$$A_p = A_a(\text{cosine } b)$$

Where:

$A_p$ = projected surface area of the plate in ft²; .00386 is unit conversion constant
$Q$ = the on-line (1.65) or off-line (3.0) adjustment factor x the 15-minute water quality design flow rate, ft³/min
$V_t$ = Rise rate of 0.033 ft/min, or empirical determination, or Stokes Law based
$\sigma_w$ = density of water at 32ºF
$\sigma_o$ = density of oil at 32ºF
$A_a$ = actual plate area in ft² (one side only)
$b$ = angle of the plates with the horizontal in degrees (usually varies from 45 to 60 degrees)
$\eta w$ = viscosity of water at 32ºF.

### 5.8.10.7. Minimum Construction Requirements

The following are construction requirements associated with the construction of an oil/water separator:

- Follow the manufacturer's recommended construction procedures and installation instructions, as well as any applicable City requirements.
- Upon completion of installation, thoroughly clean and flush the oil/water separator prior to operation.
- Specify appropriate performance tests after installation and shakedown, and/or provide certification by a licensed engineer that the separator is functioning in accordance with design objectives.

### 5.8.10.8. Operations and Maintenance Requirements

Oil/water separator O&M requirements are provided in *Appendix G* (*BMP No. 18 and 19*).

## 5.8.11. Proprietary and Emerging Water Quality Treatment Technologies

This section describes how the City will evaluate the use of proprietary and emerging water quality treatment technologies.

### 5.8.11.1. Description

To receive Ecology approval for use in stormwater applications in Washington, new technologies shall be evaluated following Ecology's technology assessment protocols (TAPE and CTAPE), which establish guidelines for evaluating the performance of water quality treatment technologies in achieving different levels of performance (i.e., pretreatment, basic, enhanced, phosphorus, oil). The evaluation process requires manufacturers to field test the performance of new water quality treatment technologies. After the successful completion of field testing, the vendor submits a technology evaluation report (TER) to Ecology for review and approval. Information about Ecology's evaluation process can be found at the following website (www.ecy.wa.gov/programs/wq/stormwater/newtech/index.html).

Under the technology assessment process, Ecology assigns "Use Level Designations" to emerging technologies based on the results of the TAPE and CTAPE evaluation. Ecology establishes the use level for each technology and its associated performance level based on the relevance, amount, and quality of performance data available as defined below:

- **GULD – General Use Level Designation** – A General Use Level Designation (GULD) is assigned to technologies for which the performance monitoring demonstrates with a sufficient degree of confidence, that the technology is expected to achieve Ecology's performance goals. Use is subject to conditions, including design restrictions and sizing, documented in a use level designation letter prepared by Ecology.
- **CULD – Conditional Use Level Designation** – A Conditional Use Level Designation (CULD) is assigned to technologies that have considerable performance data not collected per the TAPE protocol. Ecology will allow the use of technologies that receive a CULD for a specified time, during which performance monitoring shall be conducted and a TER submitted to Ecology. Units that are in place do not have to be removed after the specified time period. Use is subject to conditions, including design restrictions and sizing, documented in a use level designation letter prepared by Ecology.
- **PULD – Pilot Use Level Designation** – A Pilot Use Level Designation (PULD) is assigned to new technologies that have limited performance monitoring data or that only have laboratory performance data. The PULD allows limited use of the technology to allow performance monitoring to be conducted. PULD technologies may be installed provided that the vendor and/or developer agree to conduct performance monitoring per the TAPE protocol at all installations. Use is subject to conditions, including design restrictions and sizing, documented in a use level designation letter prepared by Ecology.

### 5.8.11.2. Performance Mechanisms

Ecology (2011) has established different performance goals for water quality treatment technologies based on the types of pollutants that they are effective in removing and their applicable use for water quality treatment. Proprietary technologies use a wide variety of mechanisms to achieve these performance goals. This section has further information on a small sub-set of proprietary technologies that have achieved a GULD designation using primarily filtration and adsorption.

### 5.8.11.3. Applicability and Restrictions

The following sub-set of four TAPE approved proprietary technologies have been evaluated by the City and sized for annual maintenance and can be applied to meet or partially meet the requirements listed below. Other proprietary technologies may be applicable, refer to the Ecology website.

| BMP | On-site | | Flow Control | | | Water Quality | | | | Conveyance |
|---|---|---|---|---|---|---|---|---|---|---|
| | List | Standard | Forest | Pasture | Peak | Basic | Enhanced | Oil Control | Phosphorus | |
| Bay Filter® (Silica sand, perlite, activated alumina media) | | | | | | ✓ | | | | |
| Filterra® | | | | | | ✓ | ✓ | ✓ | ✓ | |
| FloGard Perk Filter® (Zeolite, perlite, carbon media) | | | | | | ✓ | | | ✓ | |
| StormFilter® (Zeolite, perlite, granular activated carbon media) | | | | | | ✓ | | | | |

Note: Hydraulic conductivity differs from sizing for basic treatment, Use the lowest applicable hydraulic conductivity when sizing.

The Director will accept technologies approved by Ecology as described below:

- GULD technologies for use on parcels will be accepted subject to the conditions of use established by in the use level designation established by Ecology and sized for mass loading targeting annual maintenance. Use in the right-of-way is subject to approval by SPU and early consultation is encouraged. Not all GULD approved BMPs will be acceptable.
- CULD technologies will be accepted on a limited basis provided that the project owner signs an agreement with the City stating that the owner will modify/upgrade the system in accordance with any conditions that Ecology may require as part of the final GULD designation and sized for mass loading targeting annual maintenance. The owner shall also file annual reports as outlined by the City.
- PULD technologies will be accepted on a limited basis to enable manufacturers to obtain data to help fulfill the requirements of the TAPE protocol. These projects shall

be approved in advance by the Director of SPU, be sized for mass loading targeting annual maintenance and have an approved monitoring plan reviewed by Ecology, and provide a financial bond to provide clean-up and replacement in the event of failure.

#### *5.8.11.4. Site Considerations*

Site considerations for the Filterra® system installation are primarily regarding grading and landscaping. For grading, both the flow entrance to the Filterra® and bypass to a catch basin are important considerations and need to be analyzed together. Landscaping within the Filterra® system shall be from the approved list. Either the box or boxless Filterra® systems may be used.

Site considerations for the filter cartridge systems are primarily hydraulic and how to select cartridges, group cartridges and in which kind of structure. Multiple cartridges in a maintenance hole or vault will most likely be easier to remove and replace. Vaults, maintenance hole and catch basin installations and stacked or unstacked cartridges may be allowed. Within the right-of-way, maintenance hole and vault installation are preferred. Multiple heights of cartridge systems and required heads for filter function are available. Backwater conditions may restrict the use of these technologies and both the structure elevations and anticipated water surface elevations of the surrounding drainage system shall be considered.

No specific setbacks or restrictions apply to closed bottom facilities. The following setbacks and restrictions apply to open bottom facilities.

- All open bottom facilities shall be a minimum of 50 feet from the top of any steep (greater than 40 percent) slope. A geotechnical analysis and report shall be prepared addressing the potential impact of the open bottom facility on a slope steeper than 15 percent.
- The water surface at the outlet invert elevation shall be set back 100 feet from existing septic system drain fields. This setback may be reduced with written approval of Public Health – Seattle & King County.

#### *5.8.11.5. Design Criteria*

In addition to the manufacturer's design criteria and the conditions of use in Western Washington required by Ecology, Seattle has adopted design criteria on piping and access and manufacturer review.

##### Piping

Inlet, outlet and interior piping shall have a minimum size of 6-inches. To the extent feasible, piping should be straight with as few bends and turns as possible to reduce headloss and minimize the potential for sediment to accumulate in the piping system.

##### Access

Access for lifting equipment to remove and replace filter cartridges is required. For filter cartridge systems in a vault or maintenance hole configuration where individual cartridges are

not directly below the lid or cover of the structure, a plan for the safe removal and replacement is required.

### Manufacturer Review

Design review with the manufacturer of the proprietary technology is required to check grading and variables that are specific to the proposed installation. Sizing requirements in *Section 5.8.11.6* are in addition to the manufacturer's requirements.

## *5.8.11.6. BMP Sizing*

The City has developed sizing criteria for a subset of the proprietary treatment systems that are most commonly used in Seattle. The sizing criteria are based on a target level of once-a-year maintenance to ensure that the City can meet the operations and maintenance requirements established in the Ecology use level designations for each technology. Facilities would not be inspected multiple times during the first year as required by TAPE, but would be designed to perform for one year under normal circumstances before maintenance is required.

The sizing criteria were developed using information from each manufacturer regarding how much solid material can be removed before the hydraulic capacity of their system is reduced to the point where it can no longer treat the required design storm without bypassing flow. Solids loading capacity information is fairly limited and each vendor uses different methods to evaluate. In the absence of standardized testing protocols, the City has used data currently available from the vendors. TSS loading was as shown in Table 3.5. It is anticipated that sizing criteria may be modified as more vendor testing information becomes available in the future.

For the subset of proprietary technologies in *Section 5.8.11.3*, application of the mass loading ratios will satisfy these requirements for basic treatment. For requirements other than basic treatment, or for other proprietary technologies, separate calculations demonstrating that they meet the annual maintenance goal for mass loading typical for the land use in Seattle are required.

**Step 1. Determine the water quality design flow rate**

Use an approved continuous model to determine the water quality design flow rate using the following assumptions.

| Variable | Assumption |
|---|---|
| Precipitation Series | Seattle 158-year, 5 minute series |
| Computational Time Step | 15 minutes |
| Inflows to Facility | Surface flow from total drainage area (including impervious and pervious contributing areas) routed to facilities. |

**Step 2. Adjust the water quality design flow rate**

For basic treatment requirements for the subset of proprietary technologies in *Section 5.8.11.3*, adjust the water quality design flow rate using the mass loading ratios below. Multiply the flow rate determined in Step 1 by the mass loading ratio.

| | Mass Loading Ratios | | | |
|---|---|---|---|---|
| **Zoning Categories** | **Bay Filter®** | **Filterra®** | **FloGard Perk Filter®** | **StormFilter®** |
| • Parcels zoned as SFR or MFR<br>• Non-arterial streets adjacent to properties zoned as SFR or MFR<br>• Parcels zoned as neighborhood/commercial, downtown, major institutions, master planned community, or residential/commercial<br>• Arterial streets with adjacent property zoned as neighborhood/commercial, downtown, major institutions, master planned community, or residential/commercial | 5.0 | 1.0 | 2.5 | 4.0 |
| • Parcels zoned as manufacturing/industrial<br>• Non-arterial or arterial streets with adjacent property zoned as manufacturing/industrial | 7.5 | 1.0 | 3.5 | 6.0 |

**Step 3. Determine the allowable water quality design flow rate**

Determine the allowable flow rate for the specific proprietary technology, specific configuration and size proposed to meet the requirements as described in the Ecology GULD table conditions of use.

**Step 4. Select the size of facility or number of cartridges**

Use the modified design flow rate from Step 2 to select the size of facility or number of cartridges needed. Round up as necessary.

### *5.8.11.7. Minimum Construction Requirements*

The following are construction requirements with the construction of proprietary technologies:

- Follow the manufacturer's recommended construction procedures and installation instructions as well as any applicable City requirements.
- Follow the manufacturer's requirements for flow rate restrictions (orifice).
- Protect the media filter systems from construction flows. Thoroughly clean structures and replace media or media cartridges if impacted from construction flows.

### *5.8.11.8. Operations and Maintenance Requirements*

Refer to Ecology's website and the manufacturer's website for facility-specific maintenance requirements (www.ecy.wa.gov/programs/WQ/stormwater/newtech/technologies.html).

O&M requirements for proprietary technology cartridge type filter systems (Bay Filter®, FloGard Perk Filter® and Stormfilter®) and proprietary technology Filterra® system are included in *Appendix G (BMP No. 17 and 21).* BMPs sized using the mass loading ratios as required in *Section 5.8.11.6* are not required to inspect the facility multiple times during the first year of operation or develop a site-specific inspection/maintenance schedule as indicated in the Ecology GULD approval. Annual maintenance, including filter cartridge replacement as needed is required.

# CHAPTER 6 – REFERENCES

Ecology. 2006. Guidance for UIC Wells that Manage Stormwater. Publication No. 05-10-067. Prepared by the Washington State Department of Ecology, Olympia, Washington. December 2006.

Ecology. 2011. Technical Guidance Manual for Evaluating Emerging Stormwater Treatment Technologies: Technology Assessment Protocol – Ecology (TAPE). Publication No. 11-10-061. Prepared by the Washington State Department of Ecology, Olympia, Washington. August 2011.

Ecology. 2012. Stormwater Management Manual for Western Washington. 5 vols. Publication No. 14-10-055 (a revision of Publication No. 12-10-030). Prepared by the Washington State Department of Ecology, Olympia, Washington. August 2012, revised in December 2014.

Public Health – Seattle & King County. 2011. Rainwater Harvesting and Connection to Plumbing Fixtures. Document Code No. Product/Method #10-004 (replaces #07-001). January 25, 2011.

Seattle. 2012. Right-of-Way Improvements Manual.

SPU. 2015. City of Seattle. Protecting Seattle's Waterways. Volume 3 – Final Integrated Plan. Appendix F: Pollutant Reduction Estimation Method – Candidate Stormwater Projects. May 29, 2015.

Stenn, H. et al. 2012. Building Soil: Guidelines and Resources for Implementing Soil Quality and Depth BMP T5.13. Available online at www.buildingsoil.org.

WSDOT. 2014. Washington State Department of Transportation Standard Specifications for Road, Bridge, and Municipal Construction, 2014. Publication No. M 41-10. Prepared by Washington State Department of Transportation. January 2014.

WSU. 2012. Low Impact Development Technical Guidance Manual for Puget Sound

WSU. 2013. Rain Garden Handbook for Western Washington Homeowners. Prepared by the Pierce County Extension of Washington State University, Puyallup, Washington.