Protecting Seattle's Waterways

Appendix E

Additional Design Requirements

CITY OF SEATTLE
STORMWATER MANUAL

FINAL DRAFT
SEPTEMBER 2015

Contents

E.1. Flow Control Structures 3
General Requirements 4
Access 4
Design Criteria 5
Multiple Orifice Restrictor 5
Weir Restrictor 6
Flow Control Device Sizing 6
Orifices 6
Riser Overflow 7
E-2. Flow Splitters 8
General Design Criteria 8
Materials 8
E-3. Flow Spreaders 11
General Design Criteria 11
Option A – Anchored Plate 11
Option B – Concrete Sump Box 12
Option C – Notched Curb Spreader 12
Option D – Through-Curb Ports 12
Option E – Interrupted Curb 12
E-4. Level Spreaders 13
Definition 13
Purpose 13
Condition Where Practice Applies 13
Planning Considerations 13
Design Criteria 13
Maintenance 14
E-5. Pipe Slope Drains 15
Definition 15
Purpose 15
Conditions Where Practice Applies 15
Planning Considerations 15
Design Criteria 16
Maintenance 17
E-6. Outlet Protection 17
Definition 17
Purpose 17

Condition Where Practice Applies 17
Planning Considerations 17
Design Criteria 17
Maintenance 18

E-7. Facility Liners 18

Design Criteria for Treatment Liners 19
Design Criteria for Low Permeability Liners 20
Compacted Till Liners 20
Clay Liners 21
Geomembrane Liners 21
Concrete Liners 22

E-8. Geotextiles 22

E-9. Plant Lists for Bioretention, Biofiltration Swales, Sand Filters, and Wet Ponds 23

Bioretention 23
Biofiltration Swales 56
Sand Filters 59
Wet Ponds 60

E-10. Drywell Sizing Tables 61

Tables

Table E.1. Spreader Length Based on 10-year, 24-hour Storm. 14
Table E.2. Lining Types Required by BMP Type. 19
Table E.3. Compacted Till Liners. 20
Table E.4. Part Shade List. 25
Table E.5. Sun List. 28
Table E.6. Native List (Sun to Part Shade includes cultivars). 33
Table E.7. Intersection and View Restriction Palette (under 24 inches in height). 38
Table E.8. Vertical Shrubs and Accent Plants. 41
Table E.9. Groundcovers if Low Profile is Required. 44
Table E.10. Steppable Plants. 46
Table E.11. Conifers (Deciduous and Evergreen). 47
Table E.12. Medium/Large Broad-leaved Evergreen Trees. 47
Table E.13. Large Deciduous Columnar Trees. 48
Table E.14. Large Deciduous Trees. 49

Table E.15. Medium/Large Deciduous Trees. 50
Table E.16. Medium Columnar Deciduous Trees. 51
Table E.17. Medium Deciduous Trees. 52
Table E.18. Small Conifer/Broad-leaved Evergreen Trees. 53
Table E.19. Small Deciduous Trees. 54
Table E.20. Plants Tolerant of Frequent Saturated Soil Conditions or Standing Water. 56
Table E.21. Plants Suitable for the Upper Side Slopes of a Biofiltration Swale. 57
Table E.22. Recommended Plants for Wet Biofiltration Swales. 58
Table E.23. Recommended Plants for Sand Filters. 59
Table E.24. Plants for Wet Pond Peripheries. 60
Table E.25. Parcel-Based Projects: Drywell Sizing Downstream of Bioretention Sized for 91% Infiltration or Permeable Pavement Facility. 61
Table E.26. Single-Family Residential Projects: Drywell Sizing Downstream of Bioretention Sized for 95% Infiltration or Permeable Pavement Facility 62

Figures

Figure E.1. Simple Orifice. 3
Figure E.2. V-Notch, Sharp-Crested Weir. 4
Figure E.3. Riser Inflow Curves. 7
Figure E.4. Flow Splitter Example A. 9
Figure E.5. Flow Splitter Example B. 10
Figure E.6. Level Spreader Prior to Backfill and Downstream Stabilization. 14
Figure E.7. Pipe Slope Drain Details. 15

Appendix E includes additional design requirements for the following:

- Flow control structures (Section E-1)
- Flow splitters (Section E-2)
- Flow spreaders (Section E-3)
- Level spreaders (Section E-4)
- Pipe slope drains (Section E-5)
- Outlet protection (Section E-6)
- Facility liners (Section E-7)
- Geotextiles (Section E-8)
- Plant Lists for Bioretention, Biofiltration Swales, Sand Filters, and Wet Ponds (Section E-9)
- Drywell sizing tables (Section E-10)

E.1. Flow Control Structures

Flow control structures are catch basins or maintenance holes with a restrictor device for controlling outflow from a facility to meet the desired performance. Riser type restrictor devices ("tees") also provide some incidental oil/water separation to temporarily detain oil or other floatable pollutants in runoff due to accidental spill or illegal dumping.

The restrictor device usually consists of two or more orifices and/or a weir section sized to meet performance requirements. Standard control structure details are shown in Figures E-1 and E-2.

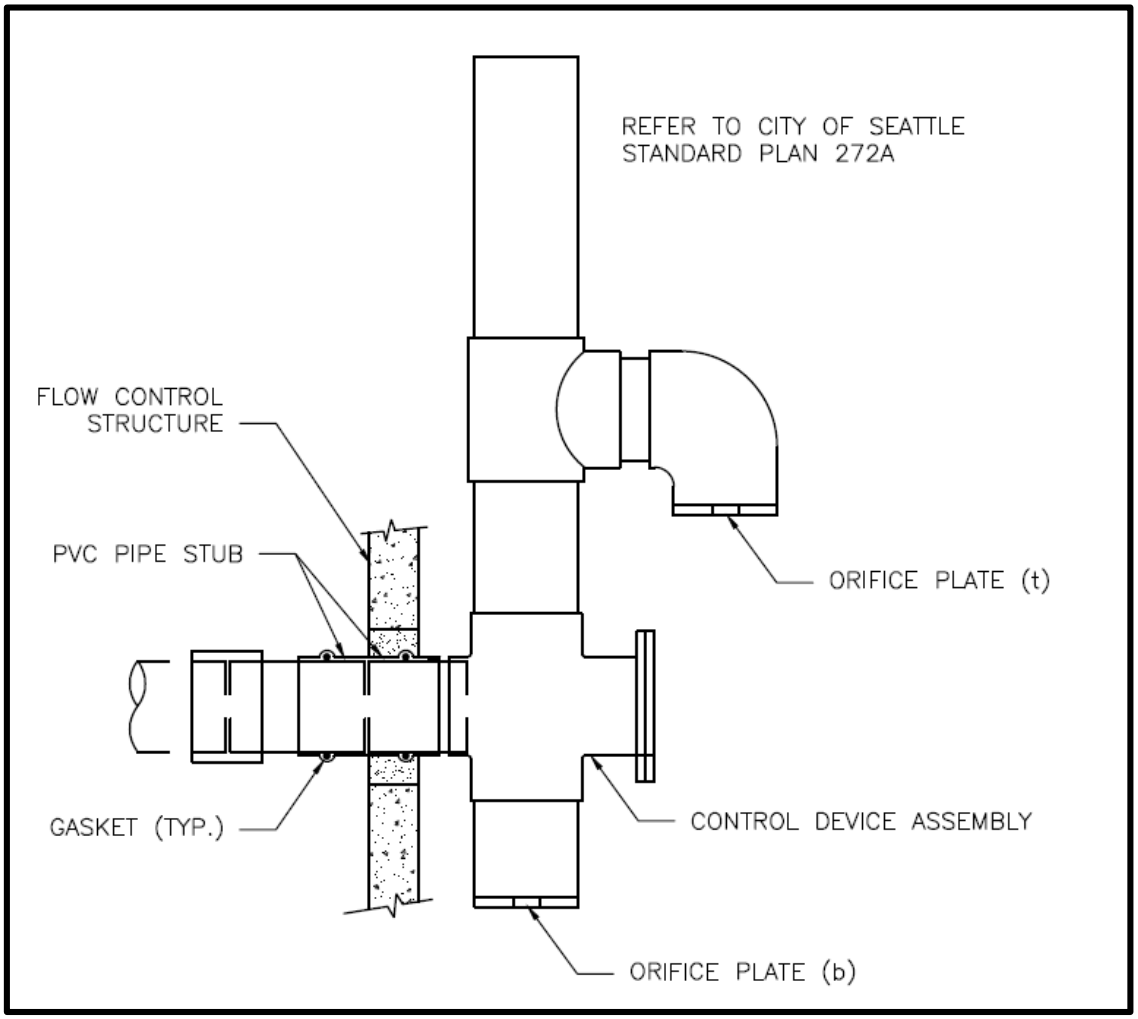

Figure E.1.Simple Orifice.

For design requirements related to conveyance and drainage refer to *Volume 3*, *Section 4.3*.

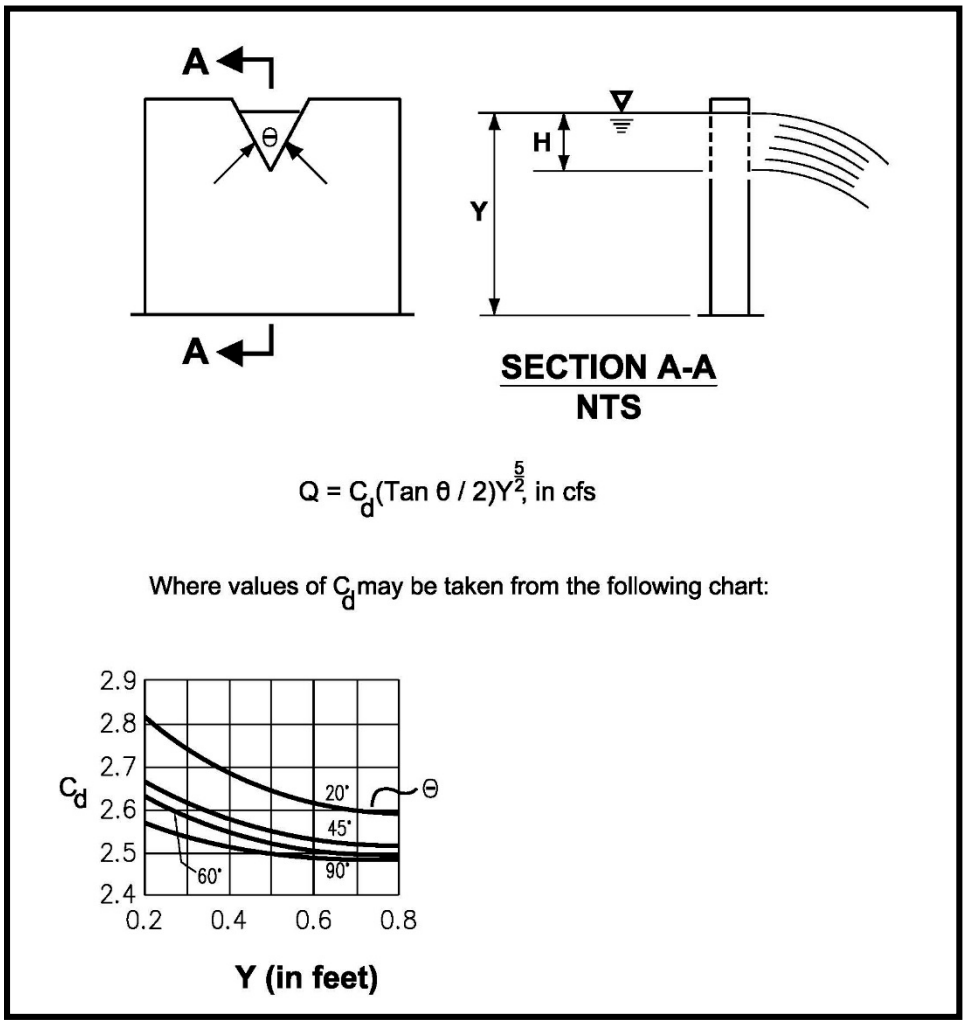

Figure E.2. V-Notch, Sharp-Crested Weir.

General Requirements

Flow control structures shall comply with the specifications outlined in the City's Standard Plans numbers 270 and 272A. Additional general requirements are presented below.

Plans submitted for a permit shall include flow control structure rim elevation, the storage pipe invert elevation, the outlet pipe invert elevation, the elevation of the top of the storage pipe, the elevation of the top of the overflow pipe, the orifice diameter(s), and the orifice elevation(s).

Access

The following access requirements apply to control structures:

- Access shall be provided to the flow control structure from the ground surface with a three bolt locking maintenance hole ring and cover (refer to Requirements for Design and Construction of Side Sewer Director's Rule). Rim elevations shall match proposed finish grade. A rectangular cover, or a cover that allows water to enter through the

top of the flow control structure, shall not be used. The ring and cover shall be set so the flow control device or the ladder is visible at the edge of the access opening.

- The inside diameter of the flow control structure shall be at least 4 feet to allow maintenance and repair access, and to accommodate stormwater overflow.
- Maintenance holes and catch basins shall meet the OSHA and WISHA confined space requirements, which include, but are not limited to, clearly marking entrances to confined space areas. This may be accomplished by hanging a removable sign in the access riser, just under the access lid.
- The flow control device shall be PVC, not Corrugated Metal Pipe (CMP). The mounting straps and the outlet adapter shall be installed in a manner that will make the flow control device easily removable for maintenance, repair, or replacement. The flow control device shall be designed and located under the maintenance hole ring and cover for inspection from the surface. The outlet pipe adapter may be a plastic, bell-end pipe or a plastic coupling with rubber gaskets. The outside of the pipe or coupling shall be sanded, epoxy coated, and sand impacted to bond with the flow control structure.

Design Criteria

Multiple Orifice Restrictor

In most cases, control structures need only two orifices: one at the bottom and one near the top of the riser, although additional orifices may best utilize detention storage volume. Several orifices may be located at the same elevation if necessary to meet performance requirements.

Design requirements for multiple orifice flow restrictors are presented below.

- The minimum allowable orifice diameter is 0.5 inches for underground tanks or vaults and 0.25 inches for aboveground cisterns. In some instances, a 0.5-inch bottom orifice will be too large to meet target release rates, even with minimal head. In these cases, the live storage depth need not be reduced to less than 3 feet in an attempt to meet the performance standards. Also, under such circumstances, flow-throttling devices may be a feasible option. These devices will throttle flows while maintaining a plug-resistant opening.
- Orifices may be constructed on a tee section as shown in City of Seattle Standard Plan 270 or on a baffle.
- In some cases, performance requirements may require the top orifice/elbow to be located too high on the riser to be physically constructed (e.g., a 13-inch-diameter orifice positioned 0.5 feet from the top of the riser). In these cases, a notch weir in the riser pipe may be used to meet performance requirements.
- For ponding facilities, backwater effects shall be included in designing the height of the downstream conveyance system. High tailwater elevations may affect performance of the restrictor system and reduce live storage volumes.

Weir Restrictor

Design requirements for multiple orifice flow restrictors are presented below.

- Weirs may be used as flow restrictors. However, they shall be designed to provide for primary overflow of the developed 100-year peak flow discharging to the detention facility (Figure E-3).

Flow Control Device Sizing

Orifices

Flow through orifice plates in the standard tee section or down-turned elbow may be approximated by the general equation:

$$Q = C\,A\sqrt{2gh}$$

where Q = flow (cfs)
C = coefficient of discharge (0.62 for plate orifice)
A = area of orifice (ft^2)
h = hydraulic head (ft)
g = gravity (32.2 ft/sec^2)

Figure E-3 illustrates this simplified application of the orifice equation.

The diameter of the orifice is calculated from the flow. The orifice equation is often useful when expressed as the orifice diameter in inches.

$$d = \sqrt{\frac{36.88Q}{\sqrt{h}}}$$

where *d* = orifice diameter (inches)
Q = flow (cfs)
h = hydraulic head (ft)

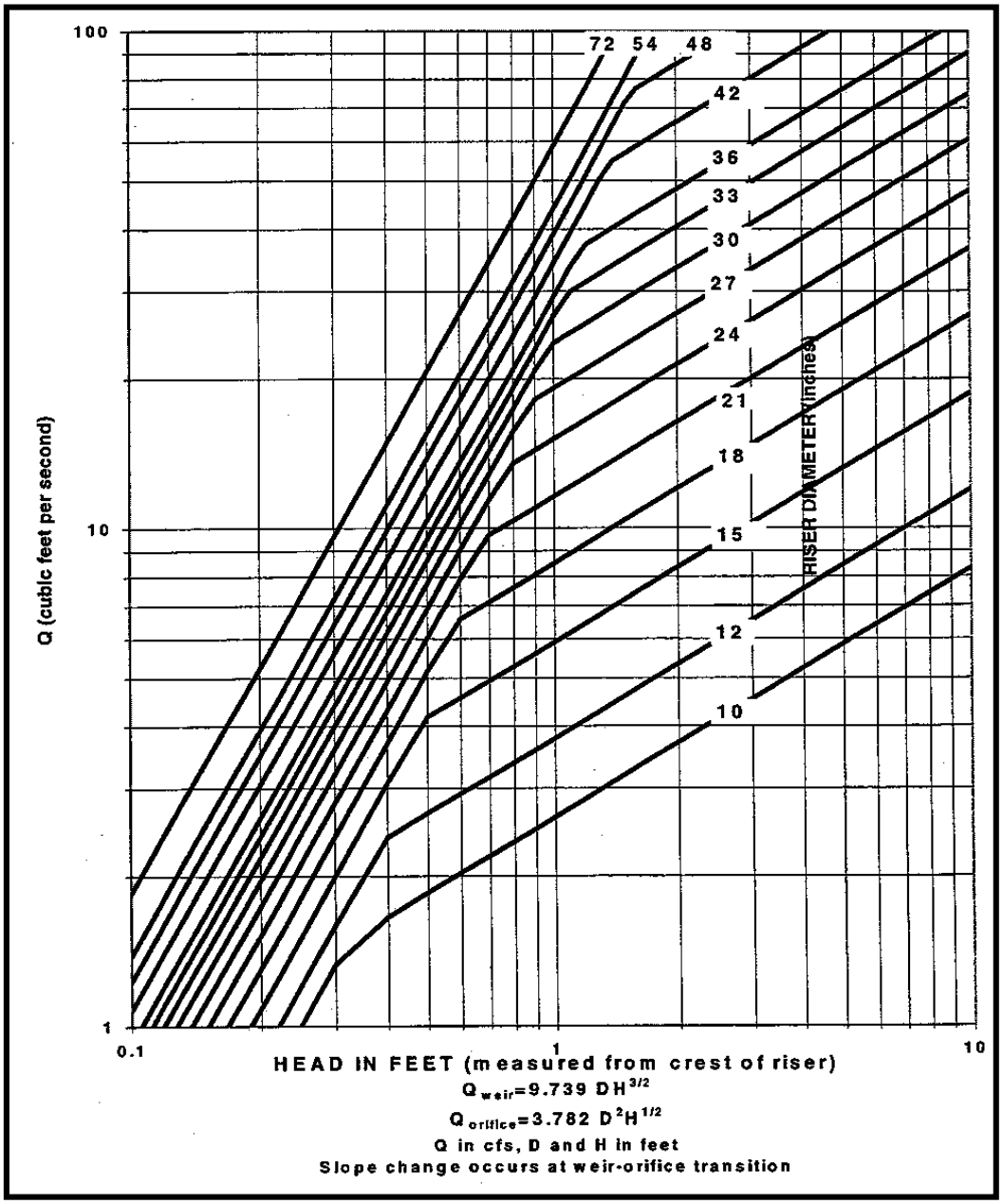

Figure E.3. Riser Inflow Curves.

Riser Overflow

The combined orifice and riser (or weir) overflow may be used to meet performance requirements; however, the design shall still provide for primary overflow of the developed 100-year peak flow assuming all orifices are plugged. The nomograph in Figure E-3 can be used to determine the head (in feet) above a riser of given diameter and for a given flow (usually the 100-year peak flow for developed conditions).

E-2. Flow Splitters

Flow splitters are typically structures with baffles, weirs or orifice controls. Two examples of maintenance hole flow splitters are shown in Figure E-4 and Figure E-5. Other equivalent designs for splitting flows may also be acceptable.

General Design Criteria

The top of the weir shall be located at the water surface for the design flow. Flows modeled using a continuous simulation model shall be at a 15-minute time step or less.

The maximum head shall be minimized for flow in excess of the water quality design flow. Specifically, flow to the water quality treatment facility at the 100-year water surface shall not increase the design water quality flow by more than 10 percent.

As an alternative to using a solid top plate in Figure E-5, a full tee section may be used with the top of the tee at the 100-year water surface. This alternative would route emergency overflows (if the overflow pipe were plugged) through the water quality treatment facility rather than generate back up from the maintenance hole.

Backwater effects shall be included in the design of standpipe height in the maintenance hole.

Materials

- The splitter baffle may be installed in a maintenance hole or vault.
- The baffle wall shall be made of reinforced concrete or another suitable material resistant to corrosion, and have a minimum 4-inch thickness.
- All metal parts shall be corrosion resistant. Examples of required materials include aluminum, stainless steel, and plastic. Zinc and galvanized materials are prohibited because of aquatic toxicity. Painted metal parts shall not be used because of poor longevity.

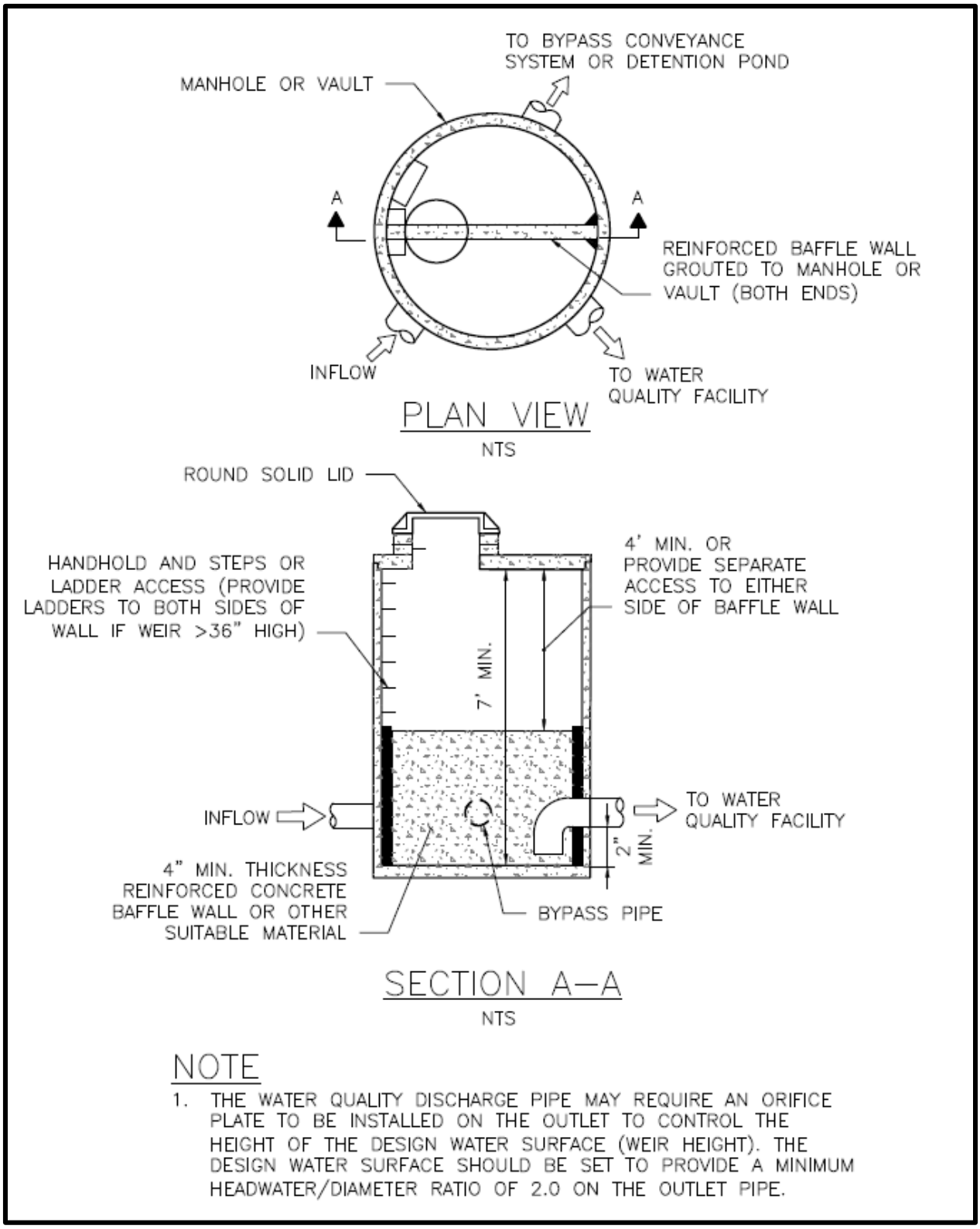

Figure E.4. Flow Splitter Example A.

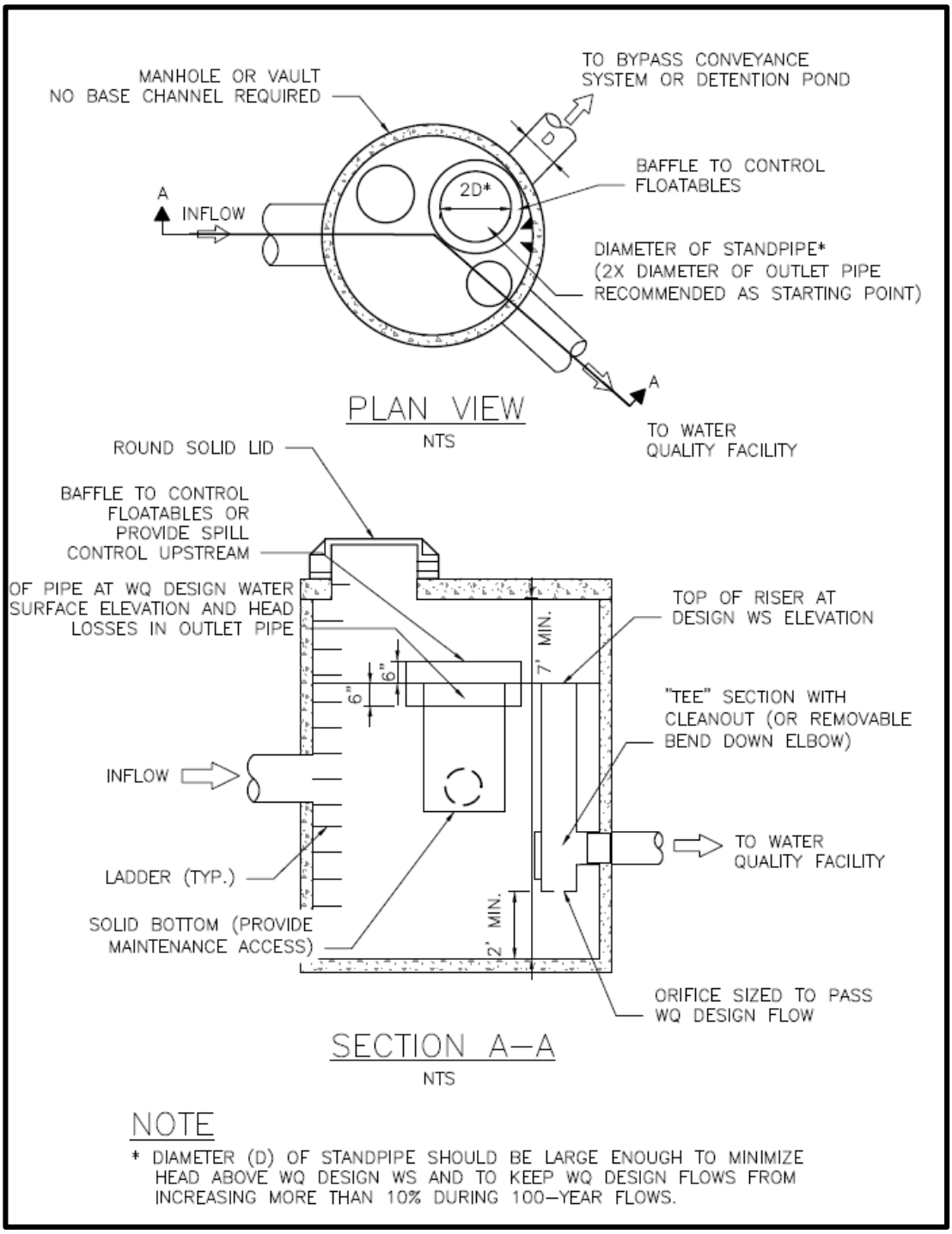

Figure E.5. Flow Splitter Example B.

E-3. Flow Spreaders

Flow spreaders uniformly spread flows across the inflow portion of non-infiltrating BMPs (e.g., sand filter, biofiltration swale, or filter strip). There are five flow spreader options presented in this section:

- Option A – Anchored plate
- Option B – Concrete sump box
- Option C – Notched curb spreader
- Option D – Through-curb ports
- Option E – Interrupted curb

Options A through C can be used for spreading flows that are concentrated. Any one of these options can be used when spreading is required by the facility design criteria. Options A through C can also be used for unconcentrated flows, and in some cases shall be used, such as to correct for moderate grade changes along a filter strip.

Options D and E are only for flows that are already unconcentrated and enter a filter strip or continuous inflow biofiltration swale. Other flow spreader options are possible with prior approval by the Director.

General Design Criteria

Where flow enters the flow spreader through a pipe, it is recommended that the pipe be submerged to the extent practical to dissipate energy as much as possible. For higher inflows (greater than 5 cfs for the 100-year storm), a Type 1 catch basin should be positioned in the spreader and the inflow pipe should enter the catch basin with flows exiting through the top grate. The top of the grate should be lower than the level spreader plate, or if a notched spreader is used, lower than the bottom of the v-notches.

Option A – Anchored Plate

- An anchored plate flow spreader shall be preceded by a sump having a minimum depth of 8 inches and minimum width of 24 inches. If not otherwise stabilized, the sump area shall be lined to reduce erosion and to provide energy dissipation.
- The top surface of the flow spreader plate shall be level, projecting a minimum of 2 inches above the ground surface of the water quality treatment facility, or v-notched with notches 6 to 10 inches on center and 1 to 6 inches deep (use shallower notches with closer spacing). Alternative designs may also be considered.
- A flow spreader plate shall extend horizontally beyond the bottom width of the facility to prevent water from eroding the side slope. The horizontal extent should be such that the bank is protected for all flows up to the 100-year flow, or the maximum flow that will enter the water quality treatment facility.
- Flow spreader plates shall be securely fixed in place.

- Flow spreader plates may be made of either wood, metal, fiberglass reinforced plastic, or other durable material. If wood, pressure treated 4- by 10-inch lumber or landscape timbers are acceptable.
- Anchor posts shall be 4-inch square concrete, tubular stainless steel, or other material resistant to decay. Refer to Volume V of the *Stormwater Management Manual for Western Washington* for an example of an anchored plate flow spreader.

Option B – Concrete Sump Box

- The wall of the downstream side of a rectangular concrete sump box shall be level and shall extend a minimum of 2 inches above the treatment bed. This serves as a weir to spread the flows uniformly across the bed.
- The downstream wall of a sump box shall have "wing walls" at both ends. Side walls and returns shall be slightly higher than the weir so that erosion of the side slope is minimized.
- Concrete for a sump box can be either cast-in-place or precast, but the bottom of the sump shall be reinforced with wire mesh for cast-in-place sumps.
- Sump boxes shall be placed over bases that consists of 4 inches of crushed rock, 5/8-inch minus to help assure the sump remains level. Refer to Volume V of the *Stormwater Management Manual for Western Washington* for an example of a concrete sump box flow spreader.

Option C – Notched Curb Spreader

Notched curb spreader sections shall be level and made of extruded concrete laid side-by-side and level. Typically, five "teeth" per 4-foot section provide good spacing. The space between adjacent teeth forms a v-notch.

Option D – Through-Curb Ports

Unconcentrated flows from paved areas entering filter strips or continuous inflow biofiltration swales can use curb ports or interrupted curbs (Option E) to allow flows to enter the strip or swale. Curb ports use fabricated openings that provide an opening through the curb to admit water to the facility.

Openings in the curb shall be at regular intervals but at least every 6 feet (minimum). The width of each curb port opening shall be a minimum of 11 inches. Approximately 15 percent or more of the curb section length should be in open ports, and no port should discharge more than about 10 percent of the flow. Refer to Volume V of the *Stormwater Management Manual for Western Washington*, for an example of a through-curb port flow spreader.

Option E – Interrupted Curb

Interrupted curbs are sections of curb placed to have gaps spaced at regular intervals along the total width (or length, depending on the facility) of the facility area. At a minimum, gaps shall be every 6 feet to allow distribution of flows into the treatment facility before they become too concentrated. The opening shall be a minimum of 11 inches. As a general rule, no opening should discharge more than 10 percent of the overall flow entering the facility.

E-4. Level Spreaders

Definition

A level spreader is constructed at zero percent grade and can be used to distribute concentrated runoff to sheet flow. Level spreaders can be used as either a temporary or a permanent BMP.

Purpose

To convert concentrated runoff to a thin layer of sheet flow, which releases onto a stable receiving area. For example, an existing vegetated area or a vegetated strip.

Condition Where Practice Applies

None identified for this BMP.

Planning Considerations

When properly constructed, the level spreader will significantly reduce the velocity of concentrated stormwater and spread it uniformly over a stabilized or undisturbed area.

Particular care shall be taken to ensure that the lower downslope side (or the lip) of the structure is level and on grade. If there are any depressions in the lip, flow will tend to concentrate at these points and erosion will occur, resulting in failure of the outlet. This problem may be avoided by using a grade board or a gravel lip over which the runoff shall flow when exiting the spreader. Regular maintenance is essential for this practice.

Level spreaders should be constructed on undisturbed areas that are stabilized by existing vegetation, or areas which have been properly stabilized in accordance with the requirements of the Construction Stormwater and Erosion Control section of this manual (*Volume 2*), and where concentrated flows will be dissipated at zero percent grade (Figure E-6).

Design Criteria

- The grade of the pipe and/or ditch for the last 20 feet before entering the level spreader shall be less than or equal to 1 percent if feasible. If the grade is steeper, provide a flow dissipation device. The grade of the level spreader shall be zero percent to ensure uniform spreading of stormwater runoff.
- An 8-inch high gravel berm placed across the level lip shall consist of washed crushed rock, 2 to 4 inch or 3/4 inch to 1.5 inch size.
- The temporary level spreader length will be determined by estimating the flow expected from the 10-year, 24-hour design storm (Q10), and selecting the appropriate length from Table E-1. Alternatively, use the 10 percent annual probability flow (10-year recurrence interval) using a 5-minute time step, indicated by an approved continuous runoff model. Use multiple spreaders for higher flows. If the level spreader will be permanent, level spreader length will be determined by estimating the flow expected from the 25-year, 24-hour design storm (Q25). Alternatively, an approved continuous runoff model should be used to model the 25-year recurrence interval.

- The depth of the spreader as measured from the lip should be at least 8 inches and should be uniform across the entire length.
- The area below the level spreader outlet shall be stabilized and have a slope of less than 11 percent.

Figure E.6. Level Spreader Prior to Backfill and Downstream Stabilization.

Table E.1. Spreader Length Based on 10-year, 24-hour Storm.

Q_{10} in cfs	Minimum Length (in feet)
0 – 0.1	15
0.1 – 0.2	25
0.2 – 0.3	35
0.3 – 0.4	45
0.4 – 0.5	55

cfs = cubic feet per second

Q_{10} = 10-year, 24-hour design storm

Maintenance

The spreader should be inspected regularly to ensure that it is functioning correctly. Do not place any material on it and prevent traffic from crossing the structure. If the spreader is damaged, it shall be immediately repaired.

E-5. Pipe Slope Drains

Definition

A slope drain consists of a pipe extending from the top to the bottom of a cut or fill slope and discharging into a stabilized watercourse or a sediment trapping device or onto a stabilization area. It can also be used for water discharging from a flow control or treatment facility, or to safely convey water past the toe of the slope. Pipe slope drains can be used as either a temporary or a permanent BMP.

Purpose

To carry concentrated runoff down steep slopes without causing gullies, channel erosion, or saturation of landslide-prone soils (Figure E-7).

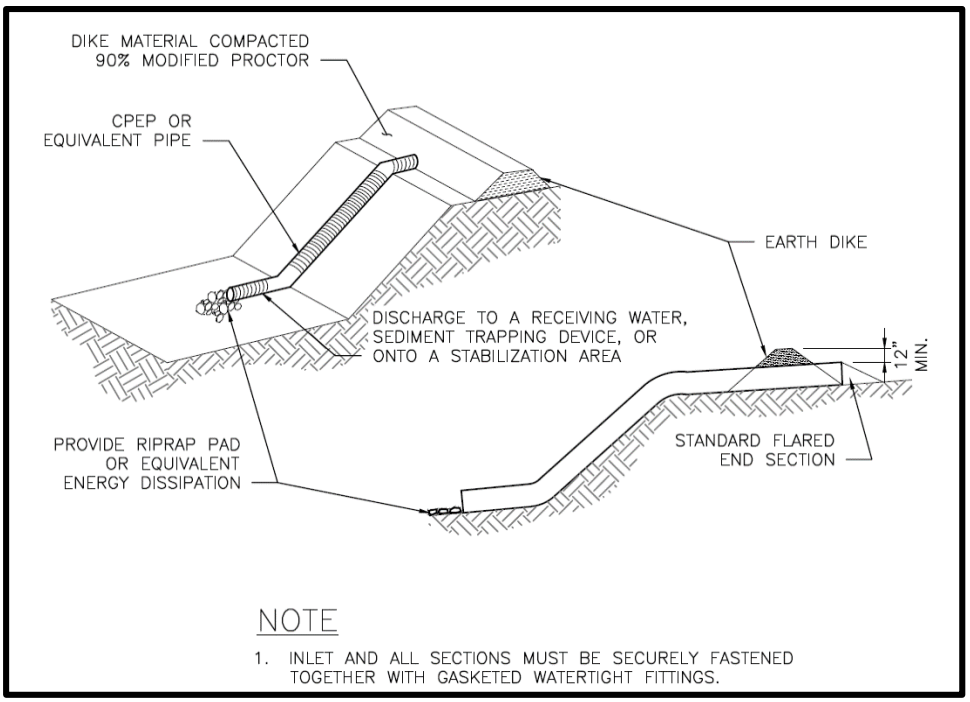

Figure E.7. Pipe Slope Drain Details.

Conditions Where Practice Applies

Conveying runoff down a slope without causing erosion.

Planning Considerations

There is often a lag between the time a cut or fill slope is completed and the time a permanent drainage system can be installed. During this period, the slope is usually not stabilized and is particularly vulnerable to erosion. Temporary slope drains can provide valuable protection of exposed slopes until permanent drainage structures can be installed.

The entrance section shall be securely entrenched, all connections shall be watertight, and the conduit shall be staked securely.

Additional protection requirements for steep slopes are included in the Environmentally Critical Area Ordinance (SMC, Section 25.09.180).

Design Criteria

- Permanent slope drains shall be designed by a licensed engineer and may have additional criteria for flow and water quality treatment requirements. Variations or alterations to the minimum BMP requirements outlined below require a licensed engineer's approval.
- The capacity for temporary drains shall be sufficient to handle a 10-year, 24-hour peak flow. Alternatively, use the 10 percent annual probability flow (10-year recurrence interval) using a 5-minute time step, indicated by an approved continuous runoff model. The hydrologic analysis shall use the existing land cover condition for predicting flow rates from tributary areas outside the project limits. For tributary areas on the project site, the analysis shall use the temporary or permanent project land cover condition, whichever will produce the highest flow rates. If using WWHM, bare soil areas should be modeled as "landscaped area." Refer to *Appendix F* for additional information on stormwater modeling.
- Re-establish cover immediately on areas disturbed by installation.
- Ensure that the entrance area is stable and large enough to direct flow into the pipe.
- The entrance shall consist of a standard flared end section for culverts 12 inches and larger with a minimum 6-inch metal toe plate to prevent runoff from undercutting the pipe inlet. The slope of the entrance shall be at least 3 percent (Figure E-8).
- Pipe slope drain size should be no greater than 6 inches. Intercept flow frequently by using multiple pipe slope drains. Multiple pipes should be no closer than 10 feet.
- The soil around and under the pipe and entrance section shall be thoroughly compacted to prevent undercutting.
- The flared inlet section shall be securely connected to the slope drain and have watertight connecting bands.
- Slope drain sections shall be securely fastened together and have gasketed watertight fittings, and be securely anchored into the soil.
- Thrust blocks should be installed any time 90 degree bends are utilized. Depending on size of pipe and flow, these can be constructed with sand bags, straw bales staked in place, "t" posts and wire, or ecology blocks.
- Pipe needs to be secured along its full length to prevent movement. This can be done with steel "t" posts and wire. A post is installed on each side of the pipe and the pipe is wired to them. This should be done every 10 to 20 feet of pipe length, depending on the size of the pipe and quantity of water diverted.

- Earth dikes shall be used to direct runoff into a slope drain. The height of the dike shall be at least 12 inches higher at all points than the top of the inlet pipe.
- The area below the outlet shall be stabilized with a riprap apron (refer to Section E-6 for outlet protection).
- If the pipe slope drain is conveying sediment-laden water, direct all flows into the sediment trapping facility.
- Refer to the City of Seattle Standard Specifications for all material specifications (www.seattle.gov/util/engineering/standard_plans_&_specs).

Maintenance

- Check inlet and outlet points regularly, especially after heavy storms. The inlet should be free of undercutting, and no water should be going around the point of entry. If there are problems, reinforce the headwall with compacted earth or sand bags. The outlet point should be free of erosion and installed with appropriate outlet protection.
- For permanent installations, inspect pipe periodically for vandalism and physical distress such as slides and wind-throw.
- Normally the pipe slope is so steep that clogging is not a problem with smooth wall pipe; however, debris may become lodged in the pipe or at the inlet.

E-6. Outlet Protection

Definition

Energy dissipating materials or devices placed at concentrated flow outlets, such as the outlets of pipes or paved channel sections. Outlet protection can be used as either a temporary or a permanent BMP.

Purpose

To prevent scour at stormwater outlets, and to minimize the potential for downstream erosion by reducing the velocity of concentrated stormwater flows.

Condition Where Practice Applies

Outlet protection is required wherever concentrated runoff could cause scour or erosion.

Planning Considerations

None identified for this BMP.

Design Criteria

- Permanent BMPs shall be designed by a licensed engineer and may have additional criteria for flow and water quality treatment requirements. Variations and/or alterations to the minimum BMP requirements require a licensed engineer's approval.

- At culvert outlets, protect from erosion by rock lining the downstream and extending up the channel sides above the maximum tail water elevation.
- Standard wing walls, and tapered outlets and paved channels should also be considered when appropriate for permanent culvert outlet protection.
- Organic or synthetic erosion blankets, with or without vegetation, are usually more effective than rock, less expensive, and easier to install. However, materials can be chosen using manufacturer product specifications.
- With low flows, vegetation (including sod) can be effective. Riprap outlet protection is also appropriate in some situations.
- For outlets at the base of steep slope pipes (pipe slope greater than 10 percent), an engineered energy dissipater shall be used with filter fabric or erosion control blankets under riprap to prevent scour and channel erosion.

Maintenance

Check for evidence of erosion, scour or channeling. Rock may need to be added if sediment builds up in the pore spaces of the outlet pad. Vegetation, erosion control blankets or rock pads may need replacement. Partial blocking of an outlet with a protective measure is not allowed unless designed by a licensed engineer.

E-7. Facility Liners

Liners discussed in this section are intended to reduce the likelihood that pollutants in stormwater will reach groundwater when runoff treatment facilities are constructed. In addition to groundwater protection considerations, some facility types require permanent standing water for proper functioning. An example is the first cell of a wet pond.

There are two types of facility liners:

1. **Treatment liners** amend the soil with materials that treat stormwater before it reaches more freely draining soils. They have slow rates of infiltration, generally less than 2.4 inches per hour, but not as slow as low permeability liners. Treatment liners may use in-place native soils or imported soils, provided that the design criteria outlined below are met.
2. **Low permeability liners** reduce infiltration to a very slow rate, generally less than 0.02 inches per hour. These types of liners are often used for industrial or commercial sites with a potential for high pollutant loading in the stormwater runoff. Low permeability liners may be constructed from compacted till, clay, geomembrane, or concrete.

Liners may also be required in areas where infiltration is not permitted (e.g., landslide-prone areas).

Table E-2 shows the type of liner required for use with various runoff treatment facilities (detention, non-infiltrating, and pretreatment BMPs). Other liner configurations may be used with prior approval from the Director.

Liners shall be placed over the bottom and/or sides of the facility as indicated in Table E-2. Areas above the treatment volume that are required to pass flows greater than the water quality treatment flow (or volume) need not be lined. However, the lining shall be extended to the top of the interior side slope and be anchored if it cannot be permanently secured by other means.

Table E.2. Lining Types Required by BMP Type.

Facility	Area to be Lined	Type of Liner Required
Presettling basin	Bottom and sides	Low permeability liner or treatment liner
Wet pond	First cell: bottom and sides to WQ design water surface	Low permeability liner or treatment liner
	Second cell: bottom and sides to WQ design water surface	Treatment liner
Combined detention/non-infiltrating BMP	First cell: bottom and sides to WQ design water surface	Low permeability liner or treatment liner
	Second cell: bottom and sides to WQ design water surface	Treatment liner
Stormwater wetland	Bottom and sides, both cells	Low permeability liner
Sand filter basin	Required if over a critical aquifer recharge area, otherwise not required. Refer to *Volume 3, Section 5.8.5*.	Low permeability or treatment liner
Sand filter vault	Not applicable	No liner needed
Linear sand filter	Not applicable if in vault	No liner needed
	Bottom and sides of presettling cell if not in vault	Low permeability or treatment liner
Media filter (in vault)	Not applicable	No liner needed
Wet vault	Not applicable	No liner needed
Non-infiltrating bioretention	Bottom and sides	Low permeability liner

Note: The Director may approve native soils as a low permeability liner based on measured infiltration rates and the recommendation of a licensed professional. The Director may also require low permeability liner based on infiltration setbacks or site constraints.

Design Criteria for Treatment Liners

This section presents the design criteria for treatment liners.

- A 2-foot thick layer of soil with a minimum organic content of 1 percent AND a minimum cation exchange capacity (CEC) of 5 milliequivalents/100 grams can be used as a treatment layer beneath a water quality or detention facility.
- To demonstrate that in-place soils meet the above criteria, one sample per 1,000 square feet of facility area shall be tested. Each sample shall be a composite of subsamples collected throughout the depth of the treatment layer.
- Typically, side wall seepage is not a concern if the seepage flows through the same stratum as the bottom of the treatment BMP. However, if the treatment soil is an engineered soil or has very low permeability, the potential to bypass the treatment

soil through the side walls may be significant. In those cases, the treatment BMP side walls should be lined with at least 18 inches of treatment soil, as described above, to prevent untreated seepage. This lesser soil thickness is based on unsaturated flow as a result of alternating wet-dry periods.

- Organic content shall be measured on a dry weight basis using ASTM D2974.
- Cation exchange capacity (CEC) shall be tested using EPA laboratory method 9081.
- Certification by a soils testing laboratory that imported soil meets the organic content and CEC criteria above shall be provided to the City.
- Animal manures used in treatment soil layers shall be sterilized because of potential for bacterial contamination of the groundwater.

Design Criteria for Low Permeability Liners

This section presents the design criteria for each of the following four low permeability liner options: compacted till liners, clay liners, geomembrane liners, and concrete liners. For low permeability liners, the following criteria apply:

- Where the seasonal high groundwater elevation is likely to contact a low permeability liner, liner buoyancy may be a concern. In these instances, use of a low permeability liner shall be designed by a geotechnical engineer.
- Where grass is planted over a low permeability liner per the facility design, a minimum of 6 inches of topsoil of sufficient organic content and depth or compost-amended native soil shall be placed over the liner in the area to be planted. Native underlying soils may be suitable for planting if amended per Soil Amendment BMP requirements in *Volume 3, Section 5.1*. Twelve inches of cover is preferred.

Compacted Till Liners

- Liner thickness shall be 18 inches after compaction.
- Soil shall be compacted to 95 percent minimum dry density, modified proctor method (ASTM D-1557).
- A different depth and density sufficient to slow the infiltration rate to 2.4×10^{-5} inches per minute may also be used instead of the above criteria if designed by a geotechnical engineer.
- Soil shall be placed in maximum 6-inch lifts.
- Soils shall meet the gradation outlined in Table E-3 unless otherwise designed by a geotechnical engineer.

Table E.3. Compacted Till Liners.

Sieve Size	Percent Passing
6-inch	100
4-inch	90
#4	70 – 100
#200	20

Clay Liners

- Liner thickness shall be 12 inches after compaction.
- Clay shall be compacted to 95 percent minimum dry density, modified proctor method (ASTM D-1557).
- A different depth and density sufficient to slow the infiltration rate to 2.4 x 10^{-5} inches per minute may also be used instead of the above criteria, if designed by a geotechnical engineer and approved by the Director.
- Plasticity index shall not be less than 15 percent (ASTM D-423, D-424).
- Liquid limit of clay shall not be less than 30 percent (ASTM D-2216).
- Clay particles passing shall not be less than 30 percent (ASTM D-422).
- The slope of clay liners shall be restricted to 3H: 1V for all areas requiring soil cover; otherwise, the soil layer shall be stabilized by another method so that soil slippage into the facility does not occur. Any alternative soil stabilization method shall take maintenance access into consideration.

Geomembrane Liners

- Geomembrane liners shall be ultraviolet (UV) light resistant and have a minimum thickness of 30 mils. A thickness of 40 mils shall be used in areas of maintenance access or where heavy machinery will be operated over the membrane.
- The geomembrane fabric shall be protected from puncture, tearing, and abrasion by installing geotextile fabric on the top and bottom of the geomembrane. The geotextile fabric shall have a high survivability per the WSDOT Standard Specifications Section 9-33 Construction Geotextile. Equivalent methods for protecting the geomembrane liner may be permitted, subject to approval by Director. Equivalency will be based on the ability of the fabric to protect the geomembrane from puncture, tearing, and abrasion.
- Geomembranes shall be bedded according to the manufacturer's recommendations.
- Liners shall be covered with 12 inches of top dressing forming the bottom and sides of the water quality treatment facility, except for linear sand filters. Top dressing shall consist of 6 inches of crushed rock covered with 6 inches of topsoil of sufficient organic content and depth or compost-amended native soil. The rock layer is to mark the location of the liner for future maintenance operations. As an alternative to crushed rock, 12 inches of native soil may be used if orange plastic “safety fencing” or another highly-visible, continuous marker is embedded 6 inches above the membrane.
- If possible, liners should be of a contrasting color so that maintenance workers are aware of any areas where a liner may have become exposed when maintaining the facility.
- Non-textured geomembrane liners shall not be used on slopes steeper than 5H:1V to prevent the top dressing material from slipping. Textured liners may be used on slopes up to 3H:1V upon design by a geotechnical engineer that the top dressing will be stable for all site conditions, including maintenance.

Concrete Liners

- Concrete liners may also be used for sedimentation chambers and for sedimentation and filtration basins less than 1,000 square feet in area. Concrete shall be 5-inch-thick Class 3000 or better and shall be reinforced by steel wire mesh. The steel wire mesh shall be 6 gage wire or larger and 6 inch by 6 inch mesh or smaller. An "Ordinary Surface Finish" is required per City of Seattle Standard Specification 6-02.3(14). When the underlying soil is clay or has an unconfined compressive strength of 0.25 ton per square foot or less, the concrete shall have a minimum 6 inch compacted aggregate base consisting of coarse sand and river stone, crushed stone or equivalent with diameter of 0.75 to 1 inch. Where visible, the concrete shall be inspected annually and all cracks shall be sealed.
- Portland cement liners are allowed irrespective of facility size, and shotcrete may be used on slopes. However, specifications shall be designed by a licensed engineer who certifies the liner against cracking or losing water retention ability under expected conditions of operation, including facility maintenance operations. Weight of maintenance equipment can be up to 80,000 pounds when fully loaded.
- Asphalt concrete may not be used for liners due to its permeability to many organic pollutants.
- If grass is to be grown over a concrete liner, slopes shall be no steeper than 5H:1V to prevent the top dressing material from slipping. Textured liners may be used on slopes up to 3H:1V upon recommended design by a geotechnical engineer that the top dressing will be stable for all site conditions, including maintenance.

E-8. Geotextiles

The following recommended applications are provided courtesy of Tony Allen (Geotechnical Engineer-WSDOT) with references provided to the relevant tables in the City of Seattle Standard Specifications:

- For sand filter drain strip between the sand and the drain rock or gravel layers use Geotextile Properties for Underground Drainage, moderate survivability, Class A, from Tables 1 and 2 in the City of Seattle Standard Specifications 9-37.
- For sand filter matting located immediately above the impermeable liner and below the drains, the function of the geotextile is to protect the impermeable liner by acting as a cushion. The specification provided in Table 4 in the City of Seattle Standard Specifications 9-37 shall be used to specify survivability properties for the liner protection application. Table 2 in the City of Seattle Standard Specifications 9-37, Class C shall be used for filtration properties. Only nonwoven geotextiles are appropriate for the liner protection application.
- For infiltration drains use Geotextile for Underground Drainage, low survivability, Class C, from Tables 1 and 2 in the City of Seattle Standard Specifications 9-37.
- For a sand bed cover a geotextile fabric is placed exposed on top of the sand layer to trap debris brought in by the stormwater and to protect the sand, facilitating easy cleaning of the surface of the sand layer. A polyethylene or polypropylene geonet shall be used in lieu of geotextile fabric. The geonet material shall have high UV resistance

(90 percent or more strength retained after 500 hours in the weatherometer, ASTM D4355), and high permittivity (ASTM D4491, 0.8 sec $^{-1}$ or more) and percent open area (CWO-22125, 10 percent or more). Tensile strength shall be on the order of 200 pounds grab (ASTM D4632) or more.

E-9. Plant Lists for Bioretention, Biofiltration Swales, Sand Filters, and Wet Ponds

The following plant lists were developed as a guide for bioretention (infiltrating and non-infiltrating), biofiltration swales, sand filters, and wet ponds. For information regarding planting for other BMPs, refer to *Volume 3*, *Chapter 5*. More stringent requirements have been developed for facilities sited in the right-of-way and can be found in the Seattle Right-of-Way Improvements Manual.

Bioretention

The Seattle Right-of-Way Improvements Manual establishes height limits for non-street tree plantings in rights-of-way. Maximum plant height within 30 feet of an intersection (as measured from the corner of the curb) is 24 inches. Elsewhere in the right-of-way, plantings are allowed to be 30 inches with the exception of accent shrubs as directed.

The following planting zone codes apply to Tables E.4 through E.19:

- Zone 1: designation for plants that are used for water quality in the bottoms of the bioretention facilities
- Zone 2: designation for plants that are used for water quality in the lower slopes/wetted/ponded area of the bioretention facilities
- Zone 3: species appropriate for planting at the tops and upper slopes of the of bioretention areas that are used as a border and as accents along the sidewalk, including vertical and accent plants and trees
- Zone 4: low, durable plants (under 24 inches) that are used in sight clearance areas or as accents at the edge of the facility
- Zone 5: designation for steppable plants used in the crossing zones and access areas along the curb – these plants may need to tolerate foot traffic, depending on their location

The following operations and maintenance/special needs code (O&M code) apply to Tables E.4 through E.10:

- A = Cut back perennials to 3 inches above ground in fall (October/November)
- B = Leave foliage and seedheads for winter interest and cut back if foliage collapses. Cut back in spring (Mid-January to Mid-March) before new growth emerges.
- C = Hand-rake in spring (Mid-January to Mid-March) before new growth emerges. Cut back to ground or thin every 2-3 years as needed.

- DS = Deadhead perennials in spring/summer to encourage reblooming and for neater appearance. Deadheading not required for function.
- DF = Deadhead perennials in fall for neater appearance and to prevent resowing. Deadheading not required for function.
- E = Cut back or prune of over sidewalk or clear zones. Remove deadwood anytime fall to spring.
- F = May need replacing every 5+/- years. (Replacement not required if vegetation coverage meets requirements)
- G = May need dividing every few years. Reasons for division include dieback in center and to increase coverage

Table E.4. Part Shade List.

EG	DT	NWN	Height from Ground	Scientific Name	Common Name	Planting Zone	Suggested Size/ Spacing	Urban Frontage	Exposure	Design Comments	O&M Code	Additional O&M Comments
SEMI			< 24"	*Abelia x grandiflora 'Prostrata'*	Prostrate white abelia	3,4	1 Gal./ 30" o.c.	UF	☼,∅		E	
	DT		18"–30"	*Aster divaricatus*	White wood aster	3	1 Gal./ 24" o.c.		∅		B	
			< 24"	*Carex elata* 'Bowles Golden'	Bowles Golden sedge	1,2	10 Cu. In. Plug/ 9" o.c.	UF	☼,∅	Limit to areas of approx. 36"x36"	B	
EG			< 24"	*Carex laxiculmis* 'Hobb'	Bunny Blue sedge	1,2	10 Cu. In. Plug/ 9" o.c.	UF	∅		C	
EG	DT	NWN	24"–48"+	*Carex obnupta*	Slough sedge	1,2	10 Cu. In. Plug/ 9" o.c.		☼,∅	Do not intermix with other emergents. Do not plant near intersections.	C	Can be sheared more frequently if overcrowding other occurs.
		NWN	24"–36"	*Carex stipata*	Beaked sedge	1,2	10 Cu. In. Plug/ 9" o.c.	UF	☼,∅	Limit to areas of approx. 36"x36"	B	
EG			24"–30"	*Carex testacea* or *dispacea*	Orange New Zealand or Autumn Sedge	1,2	10 Cu. In. Plug/ 9" o.c.	UF	☼,∅		C	
	DT		24"–36"	*Cornus sericea 'Kelseyii'*	Kelsey redstem dogwood	1,2,3	2 Gal./ 30" o.c.	UF	☼,∅		E	Stems fragile until established.
		NWN	24"–40"	*Deschampsia caespitosa*	Tufted Hair Grass	1,2	10 Cu. In. Plug/ 9" o.c.		☼,∅	Limit to areas of approx. 36"x36"	B	LOS A: For neater appearance trim seedheads.

Table E.4 (continued). Part Shade List.

EG	DT	NWN	Height from Ground	Scientific Name	Common Name	Planting Zone	Suggested Size/ Spacing	Urban Frontage	Exposure	Design Comments	O&M Code	Additional O&M Comments
			< 24"	*Deschampsia flexuosa 'Aurea'*	Golden crinkled hair grass	1,2	10 Cu. In. Plug/ 9" o.c.	UF	☼,∅	Limit to areas of approx. 36"x36"	B	LOS A: For neater appearance trim seedheads.
			24"	*Fuchsia magellanica 'Aurea'*	Dwarf Hardy Fuchsia	3,4	2 Gal./ 30" o.c.	UF	∅		E	
			< 24"	*Galanthus elwesii*	Giant Snowdrop	3,4	Bulb	UF	☼,∅	Prefers part shade. May be short-lived if too hot.	F	
EG	DT	NWN	24"–36"+	*Gaultheria shallon*	Salal	3	1 Gal./ 24" o.c.	UF	☼,∅		E	If height is a problem, Salal can be sheared with hedge trimmer.
EG			< 24"	*Geum flore-plena* 'Blazing Sunset'	Blazing Sunset Avens	3,4	1 Gal./ 10" o.c.	UF	☼,∅		DS	
			24"–36"	*Iris pallida 'Variegata'*	Variegated sweet iris	3	1 Gal./ 18" o.c.	UF	☼,∅		A	
EG	DR	NWN	< 24"	*Mahonia repens*	Creeping Oregon holly-grape	3,4	1 Gal./ 18" o.c.	UF	☼,∅		E	
EG	DR	NWN	24"–36"	*Polystichum munitum*	Western swordfern	3	2 Gal./ 24" o.c.	UF	∅	Limit to group of 3	B	Cut back before fronds appear.
EG	DT		24"–36"	*Prunus laurocerasus* 'Mount Vernon'	Mount Vernon cherry laurel	3	2 Gal./ 24" o.c.	UF	☼,∅		E	

Table E.4 (continued). Part Shade List.

EG	DT	NWN	Height from Ground	Scientific Name	Common Name	Planting Zone	Suggested Size/ Spacing	Urban Frontage	Exposure	Design Comments	O&M Code	Additional O&M Comments
EG			36"	*Rhododendron* Yak Hybrids, such as 'Ken Janeck'	Yak Hybrid	3	2 Gal./ 24" o.c.	UF	☼,∅	Several other Yak hybrids stay low and neat	E	LOS A: May produce more flowers if pruned and/or deadheaded after blooming
EG	DT		< 24"	*Sarcococca hookeriana humilis*	Himalayan Sweet Box	3	2 Gal./ 24" o.c.	UF	∅	Winter fragrance	E	
EG			30"	*Taxus* 'Emerald Spreader'	Emerald Spreader Yew	3	2 Gal./ 24" o.c.	UF	☼,∅		E	
		NWN	< 24"	*Tolmiea menziesii*	Youth on Age	1,2,3	1 Gal./ 10" o.c.		∅		G	
EG	DT		< 24"	*Veronica liwanensis*	Speedwell	3,4,5	4" Pot/ 12" o.c.	UF	☼,∅		E	LOS A: Cut back for neater appearance.

EG = Evergreen
SEMI = Semi-evergreen
DT = Drought Tolerant
DR = Drought Resistant
NWN = Northwest Natives or Cultivars
UF = Urban Frontage (Mixed Use/Commercial) appropriate plants
☼ = Full Sun
∅ = Part Sun/Part Shade
LOS = Level of Service

Table E.5. Sun List.

EG	DT	NWN	Height from Ground	Scientific Name	Common Name	Planting Zone	Suggested Size/ Spacing	Urban Frontage	Exposure	Design Comments	O&M Code	Additional O&M Comments
SEMI			< 24"	*Abelia x grandiflora* 'Prostrata'	Prostrate white abelia	3,4	1 Gal./ 30" o.c.	UF	☼,∅		E	
	DT		< 24"	*Aster novi-belgii* 'Wood's Blue'	Wood's Blue New York Aster	3	1 Gal./ 18" o.c.	UF	☼		B, G	
			24"–36"	*Carex muskingumen-sis*	Palm sedge	1,2	10 Cu. In. Plug/ 9" o.c.	UF	☼,∅	Limit to areas of approx. 36"x36"	B	
			24"–36"	*Carex elata* 'Bowles Golden'	Bowles Golden Sedge	1,2,3	10 Cu. In. Plug/ 9" o.c.	UF	☼,∅	Limit to areas of approx. 36"x36"	B	
			24"–36"+	*Carex grayi*	Gray's sedge	1,2	10 Cu. In. Plug/ 9" o.c.	UF	☼,∅	Limit to areas of approx. 36"x36"	B	
		NWN	24"–36"	*Carex stipata*	Beaked sedge	1,2	10 Cu. In. Plug/ 9" o.c.	UF	☼,∅	Limit to areas of approx. 36"x36"	B	
EG			24"–30"	*Carex testacea or dispacea*	Orange New Zealand or Autumn Sedge	1,2,3	10 Cu. In. Plug/ 9" o.c.	UF	☼,∅		C	
	DT		24"–36"	*Caryopteris incana* 'Sunshine Blue'	Sunshine Blue Bluebeard	3,4	1 Gal./ 18" o.c.	UF	☼		B OR DF	Cut back to about 18" above the ground or by half in early spring after new leaves are visible
	DT	NWN	24"–30"	*Cornus sericea* 'Kelseyii'	Kelsey redstem dogwood	1,2,3	2 Gal./ 30" o.c.	UF	☼,∅		E	Stems fragile until established.

Table E.5 (continued). Sun List.

EG	DT	NWN	Height from Ground	Scientific Name	Common Name	Planting Zone	Suggested Size/ Spacing	Urban Frontage	Exposure	Design Comments	O&M Code	Additional O&M Comments
		NWN	24"–40"	*Deschampsia caespitosa*	Tufted Hair Grass	1,2	10 Cu. In. Plug/ 9" o.c.		☼,∅	Limit to areas of approx. 36"x36"	B	LOS A: For neater appearance trim seedheads.
			< 24"	*Deschampsia flexuosa* 'Aurea'	Golden crinkled hair grass	1,2	10 Cu. In. Plug/ 9" o.c.	UF	☼,∅	Limit to areas of approx. 36"x36"	B	LOS A: For neater appearance trim seedheads.
	DT		24"–36"	*Echinacea purpurea*	Coneflower	3	1 Gal./ 18" o.c.	UF	☼		B	LOS A: For neater appearance deadhead.
EG	DT	NWN	24"–36"+	*Gaultheria shallon*	Salal	3	1 Gal./ 24" o.c.	UF	☼,∅		E	If height is a problem, Salal can be sheared with hedge trimmer.
EG	DT		24"–36"	*Hebe 'Red Edge'*	Red Edge Hebe	3,4	1 Gal./ 24" o.c.		☼		E	
	DT		< 24"	*Hemerocallis* – Later Flowering Varieties	Later Flowering Daylily varieties	3,4	1 Gal./ 15" o.c.	UF	☼,∅	Later flowering varieties are not as susceptible to Daylily gall midge.	A	LOS A: For neater appearance deadhead.
EG	DT		< 24"	*Geranium x cantabrigiense* 'Cambridge'	Perennial Geranium	3,4	1 Gal./ 15" o.c.	UF	☼,∅		B	
SEMI	DT		< 24"	*Helianthemum* 'Henfield Brilliant'	Sunrose	3,4	1 Gal./ 10" o.c.	UF	☼		B	

Table E.5 (continued). Sun List.

EG	DT	NWN	Height from Ground	Scientific Name	Common Name	Planting Zone	Suggested Size/ Spacing	Urban Frontage	Exposure	Design Comments	O&M Code	Additional O&M Comments
EG	DT		24"–36"	*Helictotrichon sempervirens*	Blue oat grass	3	1 Gal./ 18" o.c.	UF	☼		C	
EG	DT		< 24"	*Ilex x* 'Mondo'	Little Rascal Holly	3,4	1 Gal./ 18" o.c.	UF	☼,∅		E	
EG	DT	NWN	< 24"	*Iris douglasiana*	Pacific Coast Iris	3,4	1 Gal./ 18" o.c.	UF	☼	Many colors available.	G	LOS A: For neater appearance cut back dead leaves and flower stalks.
SEMI	DT	NWN	< 24"	*Iris missouriensis*	Rocky Mountain Iris	1,2	1 Gal./ 12" o.c.	UF	☼		G	LOS A: For neater appearance cut back dead leaves and flower stalks.
			24"–36"	*Iris sibirica* cultivars such as 'Bennerup Blue'	Siberian Iris	1,2,3	1 Gal./ 18" o.c.	UF			G	LOS A: For neater appearance cut back dead leaves and flower stalks.
EG	DT	NWN	< 24"	*Juncus balticus*	Baltic rush	1,2	10 Cu. In. Plug/ 9" o.c.	UF	☼		C	LOS A: Can be sheared more frequently if foliage collapses.
EG		NWN	24"–36"	*Juncus effusus* 'Quartz Creek'	Quartz Creek Soft Rush	1,2	10 Cu. In. Plug/ 9" o.c.	UF	☼,∅		C	LOS A: Can be sheared more frequently if foliage collapses.

Table E.5 (continued). Sun List.

EG	DT	NWN	Height from Ground	Scientific Name	Common Name	Planting Zone	Suggested Size/ Spacing	Urban Frontage	Exposure	Design Comments	O&M Code	Additional O&M Comments
EG	DT		< 24"	*Juniperus conferta* 'Blue Pacific'	Blue Pacific Shore juniper	3,4	1 Gal./ 3' o.c.	UF	☼		E	
	DT	NWN	36"	*Leersia oryzoides*	Rice Cutgrass	1,2	10 Cu. In. Plug/ 9" o.c.		☼	Limit to areas of approx. 36"x36"	B	LOS A: For neater appearance trim seedheads.
EG	DR	NWN	< 24"	*Mahonia repens*	Creeping Oregon holly-grape	3,4	1 Gal./ 18" o.c.	UF	☼,∅		E	
	DR		36"	*Miscanthus sinensis* 'Little Kitten'	Little Kitten Maiden Grass	3	1 Gal./15" o.c.	UF	☼		B	
	DT		30"	*Nepetax* 'Walker's Low'	Catmint	3	1 Gal./ 18" o.c.	UF	☼,∅		B	
EG			36"	*Rhododendron* Yak Hybrids, such as 'Ken Janeck'	Yak Hybrid	3,4	2 Gal./ 30" o.c.	UF	☼,∅	Several other Yak hybrids stay low and neat	E	LOS A: May produce more flowers if pruned and/or deadheaded after blooming
	DT		24"–36"	*Rudbeckia fulgida* 'Goldsturm'	Black-Eyed Susan	3,4	1 Gal./ 18" o.c.	UF	☼	Late season color accent.	A OR B	
	DT		< 24"	*Sedum* 'Autumn Joy' or 'Matrona'	Stonecrop	3,4	1 Gal./ 12" o.c.	UF	☼		G	LOS A: Can be cut back by half in June to prevent flopping.

Table E.5 (continued). Sun List.

EG	DT	NWN	Height from Ground	Scientific Name	Common Name	Planting Zone	Suggested Size/ Spacing	Urban Frontage	Exposure	Design Comments	O&M Code	Additional O&M Comments
	DT	NWN	< 24"	*Solidago canadensis* 'Baby Gold' or *Solidago hybrida* 'Dansolitlem'	Baby Gold or Little Lemon Goldenrod	3,4	1 Gal./ 18" o.c.		☼	Late season color accent.	A	
		NWN	24"–48"	*Spiraea betulifolia* or *Spiraea betulifolia* 'Tor'	Birchleaf spirea	3	1 Gal./ 24" o.c.	UF	☼		E	
EG	DT	NWN	< 24"	*Sedum oreganum*	Stonecrop	3,4,5	4" Pot/ 12" o.c.	UF	☼	Tolerates hot dry sites.	E	
EG	DT		< 24"	*Teucrium chamaedrys*	Wall germander	3,4	1 Gal./ 18" o.c.	UF	☼		E	LOS A: For neater appearance trim spent flowers in spring.
EG	DT		< 24"	*Thymus serpyllum* 'Elfin'	Elfin creeping thyme	3,4,5	4" Pot/ 12" o.c.	UF	☼		F	

EG = Evergreen
SEMI = Semi-evergreen
DT = Drought Tolerant
DR = Drought Resistant
NWN = Northwest Natives or Cultivars
UF = Urban Frontage (Mixed Use/Commercial) appropriate plants
☼ = Full Sun
∅ = Part Sun/Part Shade
LOS = Level of Service

Table E.6. Native List (Sun to Part Shade includes cultivars).

EG	DT	NWN	Height from Ground	Scientific Name	Common Name	Planting Zone	Suggested Size/ Spacing	Urban Frontage	Exposure	Design Comments	O&M Code	Additional O&M Comments
	DR	NWN	24"–36"	*Aquilegia formosa*	Western Columbine	3,4	1 Gal./ 18" o.c.		☼,∅		DF	
EG	DT	NWN	< 24"	*Arctostaphylos uva-ursi* 'Massachusetts' or 'Pt. Reyes'	Kinnikinnick	3,4	1 Gal./ 12" o.c.	UF	☼,∅	Possible use at vertical wall or single use low accent. Requires approval by Project Manager and Maintenance prior to use.	E	
	DR	NWN	24"–36"	*Camus leichtlinii or Camus quamash*	Great Camus or Common Camus	3,4	1 Gal./ 12" o.c.		☼,∅	Plant for in groups for effect. Can be planted as a bulb	DF	
EG		NWN	30"	*Carex densa*	Dense sedge	1,2	10 Cu. In. Plug/ 9" o.c.	UF	☼		C	
	DR	NWN	24"–48"	*Carex deweyana*	Dewey's sedge	1,2	10 Cu. In. Plug/ 9" o.c.		☼,∅	Limit to areas of approx. 36"x36"	B	
EG	DT	NWN	24"–48"+	*Carex obnupta*	Slough sedge	1,2	10 Cu. In. Plug/ 9" o.c.		☼,∅	Do not intermix with other emergents. Do not plant near intersections	C	Can be sheared more frequently if overcrowding other occurs.
	DT	NWN	24"–36"	*Carex pachystachya*	Chamisso sedge	1,2	10 Cu. In. Plug/ 9" o.c.		☼,∅	Limit to areas of approx. 36"x36"	B	
		NWN	24"–36"	*Carex stipata*	Beaked sedge	1,2	10 Cu. In. Plug/ 9" o.c.	UF	☼,∅	Limit to areas of approx. 36"x36"	B	

Table E.6 (continued). Native List (Sun to Part Shade includes cultivars)

EG	DT	NWN	Height from Ground	Scientific Name	Common Name	Planting Zone	Suggested Size/ Spacing	Urban Frontage	Exposure	Design Comments	O&M Code	Additional O&M Comments
	DT	NWN	24"–30"	*Cornus sericea* 'Kelseyii'	Kelsey redstem dogwood	1,2,3	2 Gal./ 30" o.c.	UF	☼,∅	Limit to areas of approx. 36"x36"	E	Stems fragile until established.
		NWN	24"–40"	*Deschampsia caespitosa*	Tufted Hair Grass	1,2	10 Cu. In. Plug/ 9" o.c.		☼,∅	Limit to areas of approx. 36"x36"	B	LOS A: For neater appearance trim seedheads.
	DT	NWN	< 24"	*Erigeron peregrinus*	subalpine fleabane daisy	3,4	1 Gal./ 12" o.c.	UF	☼		DF	
	DT	NWN	36"	*Festuca idahoensis*	Idaho fescue	3,4	1 Gal./ 18" o.c.		☼		DF	
EG	DT	NWN	< 24"	*Gaultheria ovatifolia*	Oregon wintergreen	3,4	1 Gal./ 24" o.c.	UF	☼,∅	If Gaultheria shallon is substituted see additional O&M notes	E	If height is a problem, can be sheared with hedge trimmer.
EG	DT	NWN	< 24"	*Iris douglasiana*	Pacific Coast Iris	3,4	1 Gal./ 18" o.c.	UF	☼	Many colors available.	G	LOS A: For neater appearance cut back dead leaves and flower stalks.
SEMI	DT	NWN	< 24"	*Iris missouriensis*	Rocky Mountain Iris	1,2	1 Gal./ 12" o.c.	UF	☼		G	LOS A: For neater appearance cut back dead leaves and flower stalks.

Table E.6 (continued). Native List (Sun to Part Shade includes cultivars)

EG	DT	NWN	Height from Ground	Scientific Name	Common Name	Planting Zone	Suggested Size/ Spacing	Urban Frontage	Exposure	Design Comments	O&M Code	Additional O&M Comments
EG	DT	NWN	< 24"	*Juncus balticus*	Baltic rush	1,2	10 Cu. In. Plug/ 9" o.c.	UF	☼		C	LOS A: Can be sheared more frequently if foliage collapses.
EG	DT	NWN	24"–48"+	*Juncus effusus*	Common rush	1,2	10 Cu. In. Plug/ 9" o.c.		☼,∅	Do not intermix with other emergents. Do not plant near intersections	C	
EG		NWN	< 24"	*Juncus ensifolius*	Dagger-leaf rush	1,2	10 Cu. In. Plug/ 9" o.c.	UF	☼,∅	Limit to areas of approx. 36"x36"	B	
EG	DT	NWN	< 24"	*Juncus tenuis*	Path rush	1,2	10 Cu. In. Plug/ 9" o.c.	UF	☼,∅		C	
EG	DT	NWN	< 24"	*Juniperus communis 'Mondap'*	Alpine carpet juniper	4	1 Gal./ 24" o.c.	UF	☼		E	May require pruning
EG		NWN	36"	*Ledum glandulosum*	Pacific or trapper's tea	1,2,3	5 Gal./ 36" o.c.	UF	☼,∅	Plant near the bottom of swale	E	
	DT	NWN	36"	*Leersia oryzoides*	Rice Cutgrass	1,2	10 Cu. In. Plug/ 9" o.c.		☼	Limit to areas of approx. 36"x36"	B	LOS A: For neater appearance trim seedheads.
EG	DT	NWN	< 24"	*Lewisia cotyledon or cultivars*	Siskiyou lewisia	3,4	1 Gal./ 12" o.c.	UF	☼		E	
EG		NWN	36"	*Mahonia aquifolium* 'Orange Flame' or 'Compacta'	Compact tall Oregon grape	3	1 Gal./36" o.c.	UF	☼,∅		E	

Table E.6 (continued). Native List (Sun to Part Shade includes cultivars)

EG	DT	NWN	Height from Ground	Scientific Name	Common Name	Planting Zone	Suggested Size/ Spacing	Urban Frontage	Exposure	Design Comments	O&M Code	Additional O&M Comments
EG	DR	NWN	< 24"	*Mahonia repens*	Creeping Oregon grape	3,4	1 Gal./ 18" o.c.	UF	☼,∅		E	
	DT	NWN	< 24"	*Maianthemum dilatatum*	False Lily of the Valley	1,2,3,4	4" Pot/ 12" o.c.	UF	∅	Note tendency to spread	E	LOS A: Remove dead foliage in fall.
		NWN	24"–36"	*Mimulus guttatus*	Yellow monkey-flower	1,2	1 Gal./ 18" o.c.		☼,∅		DF	
EG	DT	NWN	36"	*Pachistima myrsinites*	Oregon Boxwood	3	1 Gal./36" o.c.	UF	☼,∅		E	
		NWN	< 24"	*Potentilla fruticosa* 'Sunset'	Frosty potentilla	3,4	2 Gal./ 30" o.c.	UF	∅		E	
	DT	NWN	< 24"	*Potentilla glandulosa* or *Potentilla gracilis*	Sticky cinquefoil or slender cinquefoil	3,4	1 Gal./ 18" o.c.		☼,∅		DF	
EG		NWN	24"–36"	*Polystichum imbricans* or *Polystichum lonchitis*	Narrow-leaf sword fern or Northern holly fern	3,4	2 Gal./ 30" o.c.	UF	☼,∅	If Polystichum munitum is substituted limit groups to 3 and prune yearly	B	Cut back before fronds appear.
	DT	NWN	< 24"	*Solidago canadensis* 'Baby Gold' or *Solidago hybrida* 'Dansolitlem'	Baby Gold or Little Lemon Goldenrod	3,4	1 Gal./ 18" o.c.		☼	Late season color accent.	A	

Table E.6 (continued). Native List (Sun to Part Shade includes cultivars)

EG	DT	NWN	Height from Ground	Scientific Name	Common Name	Planting Zone	Suggested Size/ Spacing	Urban Frontage	Exposure	Design Comments	O&M Code	Additional O&M Comments
		NWN	24"–36"	*Spiraea betulifolia or Spiraea betulifolia* 'Tor'	Birchleaf spirea	3	1 Gal./ 24" o.c.	UF	☼		E	
EG	DT	NWN	< 24"	*Sedum divergens*	Stonecrop	3,4	4" Pot/ 12" o.c.	UF	☼,∅	Tolerates hot dry sites.	E	LOS A: For neater appearance deadhead.
EG	DT	NWN	< 24"	*Sedum oreganum*	Stonecrop	3,4,5	4" Pot/ 12" o.c.	UF	☼	Tolerates hot dry sites.	E	
EG	DT	NWN	24"–36"	*Xerophyllum tenax*	Bear grass	3	1 Gal/ 18" o.c.	UF	☼	Tolerates hot dry sites.	E	

EG = Evergreen
SEMI = Semi-evergreen
DT = Drought Tolerant
DR = Drought Resistant
NWN = Northwest Natives or Cultivars
UF = Urban Frontage (Mixed Use/Commercial) appropriate plants
☼ = Full Sun
∅ = Part Sun/Part Shade
LOS = Level of Service

Table E.7. Intersection and View Restriction Palette (under 24 inches in height).

EG	DT	NWN	Height from Ground	Scientific Name	Common Name	Planting Zone	Suggested Size/ Spacing	Urban Frontage	Exposure	Design Comments	O&M Code	Additional O&M Comments
			< 24"	*Chrysanthe-mum* 'Peach Centerpiece' or 'Bienchen'	Peach Centerpiece or golden chrysanthe-mum	3,4	1 Gal./ 15" o.c.		☼	Late season color accent.	B & G	Pull if scraggly.
	DT		< 24"	*Coreopsis lanceolata* 'Sterntaler'	Tickseed	3,4	1 Gal./ 15" o.c.	UF	☼		B & G	
	DT		24"–30"	*Cornus sericea* 'Kelseyii'	Kelsey redstem dogwood	1,2,3	1 Gal./ 30" o.c.	UF	☼,∅	Plant in bottom areas for sightlines.	E	Stems fragile until established.
EG	DT		< 24"	*Epimedium rubrum or sulphurescens*	Barrenwort	3,4	4" Pot/ 12" o.c.	UF	∅	Part shade to shade only without irrigation.	B	Cut back before flower stalks appear.
EG	DT		< 24"	*Euonymus fortunei* 'Interbolwi'	Blondy winter-creeper	3,4	1 Gal./ 18" o.c.	UF	☼,∅		E	
	DT		< 24"	*Geranium* 'Gerwat' *Rozanne*	Rozanne geranium	3,4	1 Gal./ 24" o.c.		☼,∅		A	LOS A: Can be sheared for neater appearance.
EG			< 24"	*Geum flore pleno* 'Blazing Sunset'	Blazing Sunset Avens	3,4	1 Gal./ 18" o.c.	UF	☼,∅		DS	
EG			< 24"	*Hebe x* 'Champion'	Champion Hebe	3,4	1 Gal./ 18" o.c.	UF	☼,∅		E	
SEMI	DT		< 24"	*Helianthemum nummularium* 'Wisley Primrose'	Yellow Sunrose	3,4	1 Gal./ 12" o.c.	UF	∅		B	

Table E.7 (continued). Intersection and View Restriction Palette (under 24 inches in height).

EG	DT	NWN	Height from Ground	Scientific Name	Common Name	Planting Zone	Suggested Size/ Spacing	Urban Frontage	Exposure	Design Comments	O&M Code	Additional O&M Comments
EG	DT		24"–36"	*Helictotrichon sempervirens*	Blue oat grass	3	1 Gal./ 18" o.c.	UF	∅	36" height only when in flower. Airy flowers. Groups of 3 maximum.	C	
EG	DT		< 24"	*Ilex x 'Mondo'*	Little Rascal Holly	3,4	1 Gal./ 18" o.c.	UF	☼,∅		E	
EG		NWN	< 24"	*Juncus effusus* 'Carmen's Japan'	Carmen's Japanese Rush	1,2	10 Cu. In. Plug/ 9" o.c.	UF	☼,∅		C	
EG			< 24"	*Juncus effusus* 'Spiralis'	Corkscrew soft rush	1,2	10 Cu. In. Plug/ 9" o.c.	UF	☼,∅		C	LOS A: Can be sheared more frequently if foliage collapses.
EG			24"–30"	*Juncus patens or Juncus patens* 'Elk blue'	California gray rush	1,2	10 Cu. In. Plug/ 9" o.c.	UF	☼,∅	Plant in bottom areas for sightlines	C	LOS A: Can be sheared more frequently if foliage collapses.
EG			< 24"	*Liriope muscari* and cultivars	Lily Turf	3,4	4" Pot/ 12" o.c.	UF	☼,∅		C	OK to pull clumps for ease of weed control.
EG	DR	NWN	< 24"	*Mahonia repens*	Creeping Oregon holly-grape	3	1 Gal./ 18" o.c.	UF	☼,∅		E	
	DT		< 24"	*Narcissus* 'Dutch Master' *or* 'King Alfred'	Daffodil	3,4	Bulb/ As Shown	UF	∅		DS	Cut back foliage in summer.
		NWN	< 24"	*Potentilla fruticosa* 'Sunset'	Frosty potentilla	3,4	2 Gal./ 30" o.c.	UF	∅		E	

Table E.7 (continued). Intersection and View Restriction Palette (under 24 inches in height).

EG	DT	NWN	Height from Ground	Scientific Name	Common Name	Planting Zone	Suggested Size/ Spacing	Urban Frontage	Exposure	Design Comments	O&M Code	Additional O&M Comments
EG	DT		< 24"	*Veronica liwanensis*	Speedwell	3,4,5	4" Pot/ 12" o.c.	UF	∅		E	LOS A: Cut back for neater appearance.

SEMI = Semi-evergreen

DT = Drought Tolerant

DR = Drought Resistant

NWN = Northwest Natives or Cultivars

UF = Urban Frontage (Mixed Use/Commercial) appropriate plants

☼ = Full Sun

∅ = Part Sun/Part Shade

LOS = Level of Service

Table E.8. Vertical Shrubs and Accent Plants.

EG	DT	NWN	Height from Ground	Scientific Name	Common Name	Planting Zone	Suggested Size/ Spacing	Urban Frontage	Exposure	Design Comments	O&M Code	Additional O&M Comments
		NWN	25'	*Amelanchier alnifolia*	Service Berry	1,2,3	Multi-stem, B&B, 5'–6' ht.		∅	Multi-stems are common.	E	May need windowing/ thinning.
			5'	*Cornus sanguinea* 'Midwinter Fire'	Midwinter Fire Dogwood	1,2,3	5 gal		☼,∅		E	Prune 2/3 of all (older) branches to 8" above ground in March to keep in bounds & to maintain yellow twigs.
		NWN	6' to 8'	*Cornus sericea* 'Flaviramea'	Yellow-Twig Dogwood	1,2,3	5 gal		∅		E	Prune 2/3 of all (older) branches to 8" above ground in March to keep in bounds & to maintain red twigs.
			10'	*Hamamelis x intermedia* 'Pallida'	Witch Hazel	3	10 gal		☼,∅	Vase-shaped open growing form	E	
			5'	*Hydrangea quercifolia* 'Pee Wee'	Oak-Leaf Hydrangea	3	5 gal		∅	Late summer flowers. Fall color. Bold leaves in winter.	E	May need windowing/ thinning.
EG			3'–4'	*Ilex glabra* 'Shamrock'	Inkberry	1,2	5 gal.		☼,∅		E	Female plants need a male pollinator to produce berries.

Table E.8 (continued). Vertical Shrubs and Accent Plants.

EG	DT	NWN	Height from Ground	Scientific Name	Common Name	Planting Zone	Suggested Size/ Spacing	Urban Frontage	Exposure	Design Comments	O&M Code	Additional O&M Comments
			3'–12'	*Ilex verticillata* & cultivated varieties	Winterberry	1,2	5 gal.		☼,∅		E	Female plants need a male pollinator to produce berries.
EG			8'–12'	*Mahonia* 'Arthur Menzies'	Ornamental Mahonia	3	5 gal		☼,∅	Upright multi-stemmed.	E	
EG		NWN	6'–10'	*Mahonia* aquifolium	Oregon grape	3	5 gal		☼,∅	Upright multi-stemmed.	E	
EG			5'	*Osmanthus* 'Goshiki'	Variegated Osmanthus	3	5 gal		∅	4' wide. Considered dwarf. New foliage is colorful.	E	May need windowing/ thinning.
			6'	*Physocarpus opulifolius* 'Nanus'	Dwarf Ninebark	1,2,3	5 gal		☼,∅	Even dwarf form may be tall & wide.	E	May need windowing/ thinning.
EG			4'	*Pieris japonica* 'Little Heath'	Little Heath Lily of the Valley	3	3 gal.		∅	Variegated foliage that emerges pink in spring. Flowers in winter	E	May need windowing/ thinning.
		NWN	8'	*Ribes sanguineum* & cultivated varieties	Red Flowering Currant	3	5 gal		∅	Attracts hummingbirds	E	May need windowing/ thinning.
			15'–20'	*Salix integra* 'Hakuro Nishiki'	Dappled Willow	1,2,3	5 gal.		☼,∅		E	Specify tree form; Prune to ground every other year to keep smaller

Table E.8 (continued). Vertical Shrubs and Accent Plants.

EG	DT	NWN	Height from Ground	Scientific Name	Common Name	Planting Zone	Suggested Size/ Spacing	Urban Frontage	Exposure	Design Comments	O&M Code	Additional O&M Comments
			8'–15'	*Sambucus nigra* 'Gerda'	Black Beauty Black Elder	1,2,3	5 gal.		☼,∅		E	
		NWN	6'	*Symphoricar-pos albus*	Snowberry	1,2,3	5 gal		☼,∅	Forms thickets.	E	May need windowing/ thinning.
			6'	*Taxodium distichum* 'Peve Minaret'	Dwarf bald cypress	1,2,3					E	
EG		NWN	6'	*Vaccinium ovatum*	Evergreen Huckleberry	1,2,3	5 gal		☼,∅		E	
			6'	*Vaccinium* 'Sunshine Blue'	Blueberry	3	5 gal		☼,∅	Self-pollinating edible fruits. Good fall color.	E	
EG			10'	*Viburnum cinnamomi-folium*	Cinnamon Viburnum	3	10 gal		☼,∅		E	May need windowing/ thinning.
		NWN	7'–12'	*Viburnum edule*	Highbush cranberry	1,2,3	5 gal.		☼,∅		E	

SEMI = Semi-evergreen
DT = Drought Tolerant
DR = Drought Resistant
NWN = Northwest Natives or Cultivars
UF = Urban Frontage (Mixed Use/Commercial) appropriate plants
☼ = Full Sun
∅ = Part Sun/Part Shade
LOS = Level of Service

Table E.9. Groundcovers if Low Profile is Required.

EG	DT	NWN	Height from Ground	Scientific Name	Common Name	Planting Zone	Suggested Size/ Spacing	Urban Frontage	Exposure	Design Comments	O&M Code	Additional O&M Comments
EG	DT		< 24"	*Ajuga reptens*	Bugleweed	3,4	4" Pot/ 12" o.c.	UF	☼,∅		E	Can be pulled if grows beyond desired boundaries.
EG	DT		< 24"	*Epimedium rubrum* or *sulphurescens* or cultivars	Barrenwort	3,4	4" Pot/ 12" o.c.	UF	∅		B	Cut back foliage before flower stalks appear.
EG	DT		< 24"	*Euonymus fortunei* 'Kewensis'	Winter-creeper euonymous	3,4	1 Gal./ 18" o.c.	UF	☼,∅		E	Can be mowed to keep low.
SEMI	DT		< 24"	*Geranium macrorrhizum* 'Album' or other cultivars	Hardy Geranium	3,4	1 Gal./ 18" o.c.	UF	☼,∅		B	
	DT	NWN	< 24"	*Maianthemum dilatatum*	False Lily of the Valley	1,2,3,4	4" Pot/ 12" o.c.	UF	∅	Note tendency to spread	E	LOS A: Remove dead foliage in fall.
EG	DT		< 24"	*Pachysandra terminalis*	Japanese Spurge	3,4	4" Pot/ 12" o.c.	UF	∅		C	
EG	DT		< 24"	*Sibbaldiopsis tridentata (= Potentilla tridentata)*	Three-toothed Cinquefoil	3,4	4" Pot/ 12" o.c.	UF	∅		E	
EG	DT		< 24"	*Rubus tricolor*	Creeping Chinese Bramble	3,4	4" Pot/ 12" o.c.	UF	∅	Tolerates deep shade. Not as aggressive or spiny as other Rubus groundcovers. Red fuzzy stems & shiny leaves.	E	

Table E.9 (continued). Groundcovers if Low Profile is Required.

EG	DT	NWN	Height from Ground	Scientific Name	Common Name	Planting Zone	Suggested Size/ Spacing	Urban Frontage	Exposure	Design Comments	O&M Code	Additional O&M Comments
EG	DT	NWN	< 24"	*Sedum divergens*	Stonecrop	3,4	4" Pot/ 12" o.c.	UF	☼,∅	Tolerates hot dry sites.	E	LOS A: For neater appearance deadhead.
EG	DT		< 24"	*Sedum requieni*	Miniature Stonecrop	3,4,5	4" Pot/ 12" o.c.	UF	☼,∅	Tolerates hot dry sites.	E	
	DT	NWN	< 24"	*Vancouveria hexandra*	Inside Out Flower	3,4	4" Pot/ 12" o.c.	UF	∅		E	
SEMI			< 24"	*Potentilla neumanniana* 'Nana'	Dwarf cinquefoil	3,4,5	4" Pot/ 12" o.c.	UF	☼,∅		E	
EG			< 24"	*Ophiopogon japonicus* 'Nanus'	Dwarf mondo grass	3,4,5	4" Pot/ 12" o.c.	UF	☼,∅	Can space at 15" o.c. for cost saving	E	

SEMI = Semi-evergreen
DT = Drought Tolerant
DR = Drought Resistant
NWN = Northwest Natives or Cultivars
UF = Urban Frontage (Mixed Use/Commercial) appropriate plants
☼ = Full Sun
∅ = Part Sun/Part Shade
LOS = Level of Service

Table E.10. Steppable Plants.

EG	DT	NWN	Height from Ground	Scientific Name	Common Name	Planting Zone	Suggested Size/ Spacing	Urban Frontage	Exposure	Design Comments	O&M Code	Additional O&M Comments
EG			< 24"	*Ophiopogon japonicus 'Nanus'*	Dwarf mondo grass	3,4,5	4" Pot/ 12" o.c.	UF	☼,∅	Can space at 15" o.c. for cost saving	E	
SEMI			< 24"	*Potentilla neumanniana* 'Nana'	Dwarf cinquefoil	3,4,5	4" Pot/ 12" o.c.	UF	☼,∅		E	
EG	DT	NWN	< 24"	*Sedum oreganum*	Stonecrop	3,4,5	4" Pot/ 12" o.c.	UF	☼	Tolerates hot dry sites.	E	
EG	DT		< 24"	*Sedum requieni*	Miniature Stonecrop	3,4,5	4" Pot/ 12" o.c.	UF	☼,∅	Tolerates hot dry sites.	E	
EG	DT		< 24"	*Thymus serpyllum* 'Elfin'	Elfin creeping thyme	3,4,5	4" Pot/ 12" o.c.	UF	☼		F	
EG	DT		< 24"	*Veronica liwanensis*	Speedwell	3,4,5	4" Pot/ 12" o.c.	UF	∅		E	LOS A: Cut back for neater appearance.

SEMI = Semi-evergreen
DT = Drought Tolerant
DR = Drought Resistant
NWN = Northwest Natives or Cultivars
UF = Urban Frontage (Mixed Use/Commercial) appropriate plants
☼ = Full Sun
∅ = Part Sun/Part Shade
LOS = Level of Service

Table E.11. Conifers (Deciduous and Evergreen).

Scientific and Common Name	Mature Urban Height	Spread	Under Wires?	Min Strip Width	Planting Zone	Fall Color	SDOT List	Design Comments
Calocedrus decurrens, Incense Cedar	75	15	No	8	3			
Metasequoia glyptostroboides, Dawn Redwood	50	25	No	6	1,2,3	Yes		Fast growing deciduous conifer.
Pinus contorta, Shore Pine	45	30	No	5	1,2,3			
Taxodium distichum, Bald Cypress	55	35	No	8	1,2,3	Yes		A deciduous conifer, broadly spreading when mature – columnar when young.
Taxodium distichum 'Mickelson', Shawnee Brave Bald Cypress	55	20	No	6	1,2,3	Yes	x	Deciduous conifer – tolerates city conditions.
Thuja plicata 'Excelsa' or 'Hogan', Western Red Cedar	40	15-20	No	8	1,2,3			Narrow columnar form.

Table E.12. Medium/Large Broad-leaved Evergreen Trees.

Scientific and Common Name	Mature Height	Spread	Under Wires?	Min Strip Width	Planting Zone	Fall Color	SDOT List	Design Comments
Lithocarpus densiflorus, Tanoak	50	20	No	6	3			
Quercus Ilex, Holly Oak	40	30	No	5	3	N/A	x	Underside of leaf is silvery-white. Often has a prominent umbrella form. Prune for form.
Umbellularia californica, Oregon Myrtlewood	60	30	No	5	1,2,3			Drought tolerant native in S. OR. Fruit looks like miniature limes.

Table E.13. Large Deciduous Columnar Trees.

Scientific and Common Name	Mature Height	Spread	Under Wires?	Min Strip Width	Planting Zone	Fall Color	SDOT List	Design Comments
Acer nigrum 'Green Column', Green Column Black Sugar Maple	50	10	No	6	3	Yes	x	
Ginko biloba 'Princeton Sentry', Princeton Sentry Ginkgo	40	15	No	6	3	Yes	x	Prune for form
Quercus robur 'fastigiata', Skyrocket Oak	40	15	No	6	3	N/A	x	

Table E.14. Large Deciduous Trees.

Scientific and Common Name	Mature Height	Spread	Under Wires?	Min Strip Width	Planting Zone	Fall Color	SDOT List	Design Comments
Acer saccharum 'Commemoration' or 'Bonfire' Commemoration or Bonfire Sugar Maple	50	35	No	6	1,2,3	Yes	x	Resistant to leaf tatter.
Fagus sylvatica, Green Beech	50	40	No	6	3	Yes	x	Silvery-grey bark. Can't handle root disturbance.
Fagus sylvatica 'Asplenifolia', Fernleaf Beech	60	50	No	6	3	Yes	x	Can't handle root disturbance.
Ginkgo biloba 'Magyar', Magyar Ginkgo	50	25	No	6	3	Yes	x	More upright and narrow than 'Autumn Gold'. Needs training when young.
Liriodendron tulipifera, Tulip Tree	60+	30	No	8	1,2,3	Yes	x	Fast-growing tree.
Platanus x acerifolia 'Bloodgood', Bloodgood London Planetree	50+	40	No	8	1,2,3	N/A	x	More anthracnose resistant than other varieties – large tree that needs space.
Quercus bicolor, Swamp White Oak	60	45	No	8	1,2,3	N/A	x	Shaggy peeling bark. Wet-soil tolerant.
Quercus coccinea, Scarlet Oak	60	40	No	6	3	Yes	x	Good fall color.
Quercus imbricaria, Shingle Oak	60	50	No	6	3	N/A	x	Leaves can persist throughout the winter.
Quercus rubra, Red Oak	60	45	No	8	1,2,3	Yes	x	Fast growing oak – large tree that needs space. Heavy acorn producer.
Tilia tomentosa, Silver Linden	60	50	No	6	3	Yes		Larger leaves than Littleleaf Linden. Fragrant flowers.
Ulmus 'Frontier' or 'Morton Glossy', Frontier or Triumph Elm	50	35	No	6	1,2,3	Yes	x	Resistant to Dutch elm disease.
Zelkova serrata 'Greenvase' or 'Village Green' Green Vase or Village Green Zelkova	45	40	No	6	3	Yes	x	Exfoliating bark. Dark green leaves turn orange-red and purple in fall.

Table E.15. Medium/Large Deciduous Trees.

Scientific and Common Name	Mature Height	Spread	Under Wires?	Min Strip Width	Planting Zone	Fall Color	SDOT List	Design Comments
Acer campestre 'Evelyn', Queen Elizabeth Hedge Maple	40	30	No	5	1,2,3	Yes	x	More upright branching than the species.
Acer freemanii 'Autumn Blaze', Autumn Blaze Maple	50	40	No	6	1,2,3	Yes	x	Cross between red and silver maple – fast growing with good fall color.
Acer rubrum 'Scarsen', Scarlet Sentinel Maple	40	25	No	6	1,2,3	Yes	x	Leaves are darker green and larger than those of other Red Maples and hold up well in summer heat. Upright branch habit.
Aesculus x carnea 'Briottii', Red Horsechestnut	30	35	No	6	3	N/A	x	Do not use near greenways or bicycle routes due to litter. Resists heat and drought better than other horse chestnuts.
Betula nigra, River Birch	40	30	No	5	1,2,3	Yes		Excellent flaky bark. Resistant to Bronze Birch Borer.
Cercidiphyllum japonicum, Katsura tree	45	40	No	8	1,2,3	Yes		
Eucommia ulmoides, Hardy Rubber Tree	50	40	No	6	3	N/A	x	Dark green, very shiny leaves – insignificant fall color.
Fagus sylvatica 'Rohanii', Purple Oak Leaf Beech	50	30	No	6	3	N/A	x	Purple leaves with wavy margins.
Ginko biloba 'Autumn Gold', Autumn Gold Ginkgo	45	35	No	6	3	Yes	x	Narrow when young.
Nothofagus antarctica, Antarctic Beech	50	35	No	5	3	No	x	Rugged twisted branching and petite foliage.
Quercus frainetto, Italian Oak	50	30	No	6	3	N/A	x	Drought resistant – green, glossy leaves in summer.
Sophora japonica 'Regent', Japanese Pagodatree	45	40	No	6	3	Yes	x	Has a rapid growth rate and tolerates city conditions, heat, and drought.
Tilia cordata 'Greenspire', Greenspire Linden	40	30	No	6	3	Yes	x	Symmetrical, pyramidal form. Fragrant flowers.
Ulmus parvifolia 'Emer II', Allee Elm	45	35	No	5	1,2,3	Yes	x	Exfoliating bark and good fall color – Resistant to Dutch Elm Disease.

Table E.16. Medium Columnar Deciduous Trees.

Scientific and Common Name	Mature Height	Spread	Under Wires?	Min Strip Width	Planting Zone	Fall Color	SDOT List	Design Comments
Acer rubrum 'Bowhall', Bowhall Maple	40	20	No	6	1,2,3	Yes	x	Upright, pyramidal form.
Carpinus betulus 'Fastigiata', Pyramidal European Hornbeam	40	15	No	5	1,2,3	Yes	x	Broadens when older.
Fagus sylvatica 'Dawyck Purple', Dawyck Purple Beech	40	12	No	6	3	Yes	x	Purple foliage.
Oxydendron arboreum, Sourwood	35	12	No	5	3	Yes	x	Consistent and brilliant fall color.
Nyssa sylvatica, Tupelo	40	20	No	6	1,2,3	Yes	x	Chunky bark. Takes standing water and drought.

Table E.17. Medium Deciduous Trees.

Scientific and Common Name	Mature Height	Spread	Under Wires?	Min Strip Width	Planting Zone	Fall Color	SDOT List	Design Comments
Acer rubrum 'Karpick', Karpick Maple	40	20	No	6	1,2,3	Yes	x	Finer texture than other narrow forms of columnar maple.
Acer truncatum x A. platanoides 'Keithsform' or 'Warrenred', Norwegian or Pacific Sunset Maple	35	25	No	5	3	Yes	x	Reliable reddish orange fall color.
Cladrastis kentukea, Yellowwood	40	40	No	5	3	Yes	x	White flowers in spring, resembling wisteria flower – blooms profusely only every 2 to 4 years – yellow/gold fall color
Cornus controversa 'June Snow', Giant Dogwood	40	30	No	5	3	Yes	x	Frothy, 6-inch clusters of white flowers in June.
Corylus colurna, Turkish Filbert	40	25	No	5	3	Yes	x	Tight, formal, dense crown – Nice central leader. Not for mixed use areas with high pedestrian traffic dues to significant debris from nuts. Drought tolerant. Plant smaller sizes in order to facilitate establishment.
Magnolia denudata, Yulan Magnolia	40	40	No	5	3	N/A	x	6" inch fragrant white flowers in spring.
Ostrya virginiana, Ironwood	40	25	No	5	3	Yes	x	Hop like fruit – slow growing
Pterostyrax hispida, Fragrant Epaulette Tree	40	30	No	5	3	Yes	x	Pendulous creamy white flowers – fragrant
Ulmus parvifolia 'Emer I', Athena Classic Elm	30	35	No	5	1,2,3	Yes	x	High resistance to Dutch Elm Disease. Drought resistant. Cinnamon colored exfoliating bark.

Table E.18. Small Conifer/Broad-leaved Evergreen Trees.

Scientific and Common Name	Mature Height	Spread	Under Wires?	Min Strip Width	Planting Zone	Fall Color	SDOT List	Design Comments
Chamaecyparis obtusa gracilis, Slender Hinoki False Cypress	15	6	Yes	5	3			Drought tolerant when established.
Embothrium coccineum, Chilean Flame Tree	30	15	No	5	3			Brilliant orange red flowers in late spring. Tree can sucker.
Eucryphia glutinosa, Brushbush	25	15	Yes	5	3			Semi-evergreen. Best in part shade.
Magnolia grandiflora 'Edith Bogue', Edith Bogue Magnolia	18	12	Yes	5	1,2,3			Excellent BLE magnolia due to hardiness.
Magnolia grandiflora 'Victoria', Victoria Evergreen Magnolia	25	20	Yes	5	1,2,3	N/A	x	
Magnolia maudiae (= Michelia maudiae), NCN	25	20	Yes	5	3			
Magnolia virginiana	35	35		5	1,2,3		x	
Quercus hypoleucoides	30	15	No	5	3			
Quercus myrsinifolia, Chinese Evergreen Oak	30	15	No	5	3			

Table E.19. Small Deciduous Trees.

Scientific and Common Name	Mature Height	Spread	Under Wires?	Min Strip Width	Planting Zone	Fall Color	SDOT List	Design Comments
Acer buegerianum, Trident Maple	30	30	Yes	5	3	Yes	x	Must train to a single stem – interesting bark.
Acer circinatum, Vine Maple	25	25	Yes	5	3	Yes	x	Avoid using on harsh sites – native tree.
Acer griseum, Paperbark Maple	30	20	Yes	5	3	Yes	x	Peeling cinnamon colored bark.
Acer tartaricum, Tartarian Maple	20	20	Yes	5	3	Yes		
Acer triflorum, Three-Flower Maple	25	20	Yes	5	3	Yes	x	Multi seasonal interest with tan, exfoliating bark and red, orange/red fall color.
Amelanchier laevis 'Snowcloud', Snowcloud Serviceberry	25	15	Yes	4	3	Yes		
Asimina triloba, Paw	30	20	Yes	5	1,2,3	N/A	x	Burgundy flower in spring before leaves.
Betula nigra 'Little King', Little King River Birch	10	12	Yes	5	1,2,3	Yes		Suitable for enclosed vertical walls
Carpinus caroliniana, American Hornbeam	25	20	Yes	5	1,2,3	Yes	x	Good fall color (variable – yellow, orange, red)
Cornus kousa x nuttallii 'Starlight', Starlight Dogwood	20	20	Yes	4	3	Yes		
Lagerstroemia 'tuscarora', Tuscarora Hybrid Crape Myrtle	20	20	Yes	4	3	Yes	x	Light cinnamon brown bark lends year round interest – drought resistant – likes a warm site
Maackia amurensis, Amur Maackia	30	20	Yes	5	3	N/A	x	Exfoliating bark – flowering in June or July – varies in intensity from year to year
Magnolia 'Elizabeth', Elizabeth Magnolia	30	20	Yes	5	3	N/A	x	Yellowish to cream colored flower in spring.

Table E.19 (continued). Small Deciduous Trees.								
Scientific and Common Name	**Mature Height**	**Spread**	**Under Wires?**	**Min Strip Width**	**Planting Zone**	**Fall Color**	**SDOT List**	**Design Comments**
Magnolia 'Galaxy', Galaxy Magnolia	25	25	Yes	5	1,2,3	Yes	x	Suitable for enclosed vertical walls. Showy pink flowers.
Magnolia kobus 'Wada's Memory', Wada's Memory Magnolia'	30	20	Yes	5	3	Yes	x	Drought tolerant. Does not flower well when young.
Malus 'Lancelot' ('Lanzam'), Lancelot Crabapple	15	15	Yes	4	3	Yes	x	Red flower buds, blooming white – red persistent fruit
Parrotia persica, Persian Parrotia	30	20	No	5	3	Yes		Blooms before it leafs out – drought tolerant – Varied fall color – reds, oranges and yellows.
Rhamnus purshiana, Cascara	30	20	Yes	5	1,2,3	Yes	x	Suitable for enclosed vertical walls
Salix matsudana 'Tortuosa', Corkscrew willow	30	15	Yes	5	1,2,3	Yes		Do not use with underdrain.
Stewartia pseudocamellia, Japanese Stewartia	25	15	Yes	5	3	Yes		Camellia-like flowers in summer. Interesting bark. Slow grower.
Styrax japonica, Japanese Snowbell	25	25	Yes	5	3	Yes	x	Reliable and easy to grow, it has plentiful, green ½" inch seeds. Flowers similar to lily in the valley.
Tilia cordata 'Chancole' or 'De Groot', Chancellor or De Groot Littleleaf Linden	30+	20	No	C = 6, D = 5	3	Yes	x	Pyramidal when young. Fragrant flowers that attract bees. One of the smaller stature littleleaf lindens.

Biofiltration Swales

Table E.20. Plants Tolerant of Frequent Saturated Soil Conditions or Standing Water.

EG	DT	NWN	Agg[a]	Scientific Name	Common Name	BMP Comments	
						Application	Mowable
	DT		A	*Agrostis* spp.	Bentgrass	S	M
SEMI	DT	NWN		*Agrostis exarata*	Spike bentgrass	S	M
	DT		A	*Agrostis alba* or *gigantea*	Redtop	S	M
EG	DT		A	*Agrostis tenuis* or *capillaris*	Colonial bentgrass	S	M
EG				*Alopecurus aequalis*	Shortawn foxtail	S	M
EG				*Alopecurus geniculatus*	Water foxtail	S	M
EG			A	*Alopecurus pratensis*	Meadow foxtail	S	M
EG	DT	NWN		*Bromus carinatus*	California brome	S	M
SEMI				*Carex densa*	Dense sedge		
EG		NWN		*Carex obnupta*	Slough sedge		
SEMI				*Carex stipata*	Sawbeak sedge		
SEMI				*Eleocharis palustris*	Spike rush		
EG	DT	NWN		*Elymus glaucus*	Blue wildrye	S	M
EG	DT	NWN		*Elymus mollis*	Dune wildrye	S	M
		NWN		*Glyceria borealis*	Northern mannagrass		
		NWN		*Glyceria elata*	Tall mannagrass		
				Glyceria grandis	American mannagrass		
EG	DT		A	*Juncus effusus*	Soft (common) rush		
SEMI	DT			*Juncus patens*	Spreading rush		
SEMI	DT			*Juncus tenuis*	Slender rush		
EG			A	*Poa trivialis*	Rough-stalked bluegrass	S	M
SEMI		NWN		*Scirpus acutus*	Hardstem bulrush		
SEMI	DT	NWN		*Scirpus microcarpus*	Small-fruited bulrush		

EG = Evergreen

SEMI = Semi-evergreen

DT = Drought Tolerant/Resistant

NWN = Northwest Natives or Cultivars

A = Aggressive

S = Allowable as seed

M = Mowable

[a] Aggressive category indicates plants to be used with caution or avoided in confined sites (e.g., right-of-way plantings), near greenbelts, etc., due to maintenance concerns

Note: Plants with mature height over 3' should be grouped in masses no wider than 12' mature width with openings of minimum 10' between masses.

Note: Designer needs to respond to the size and aspect of the individual facility when selecting plants to be used.

Table E.21. Plants Suitable for the Upper Side Slopes of a Biofiltration Swale.

EG	DT	NWN	Agg[a]	Scientific Name	Common Name	BMP Comments	
						Application	Mowable
Groundcovers							
EG	DT	NWN	A	*Achillea millefolium*	Common yarrow		
	DT	NWN		*Arctostaphylos uva-ursi*	Kinnikinnick		
	DT	NWN		*Allium Cernum*	Nodding onion		
SEMI	DT			*Epimedium grandiflorum*	Epimedium		
EG	DT			*Euonymus fortunei*	Wintercreeper		
EG	DT	NWN	A	*Fragaria chiloensis*	Beach strawberry		
		NWN		*Lupinus latifolius*	Broadleaf lupine		
	DT			*Omphalodes verna*	Creeping forget-me-not		
EG	DT		A	*Rubus calycinoides*	Creeping raspberry		
EG	DT	NWN		*Sedum oreganum*	Oregon stonecrop		
EG	DT	NWN		*Sedum divergens*	Cascade stonecrop		
EG	DT		A	*Trifolium repens*	White lawn clover	S	M
Grasses (drought-tolerant, minimum mowing)							
EG				*Buchloe dactyloides*	Buffalo grass	S	M
EG	DT			*Festuca* spp. (e.g., Many Mustang, Silverado)	Dwarf tall fescues	S	M
EG				*Festuca amethystine*	Tufted fescue	S	
EG	DT		A	*Festuca arundinacea*	tall fescue grass	S	M
EG	DT			*Festuca ovina duriuscula* (e.g., Reliant, Aurora)	Sheep fescue		
EG	DT	NWN		*Festuca idahoensis*	Idaho fescue		
EG	DT	NWN	A	*Festuca rubra*	Creeping red fescue	S	M
EG	DT		A	*Festuca rubra var. commutata*	Chewings fescue	S	M
EG	DT			*Helictotrichon sempervirens*	Blue oatgrass		

EG = Evergreen

SEMI = Semi-evergreen

DT = Drought Tolerant/Resistant

NWN = Northwest Natives or Cultivars

A = Aggressive

S = Allowable as seed

M = Mowable

[a] Aggressive category indicates plants to be used with caution or avoided in confined sites (e.g., right-of-way plantings), near greenbelts, etc., due to maintenance concerns

Note: Plants with mature height over 3' should be grouped in masses no wider than 12' mature width with openings of minimum 10' between tall plant masses.

Note: Designer needs to respond to the size and aspect of the individual facility when selecting plants to be used.

Table E.22. Recommended Plants for Wet Biofiltration Swales.

EG	DT	NWN	Agg[a]	Scientific Name	Common Name	BMP Comments	
						Application	Mowable
SEMI	DT	NWN		*Agrostis exarata*	Spike bentgrass	S	M
EG	DT		A	*Agrostis tenuis* or *capillaris*	Colonial bentgrass	S	M
				Alopecurus aequalis	Shortawn foxtail	S	M
				Alopecurus geniculatus	Water foxtail	S	M
				Eleocharis spp.	Spike rush		
SEMI				*Carex densa*	Dense sedge		
EG		NWN		*Carex obnupta*	Slough sedge		
SEMI		NWN		*Carex stipata*	Sawbeak sedge		
				Carex spp.	Sedge		
EG	DT		A	*Festuca arundinacea var.*	Tall fescue grass	S	M
EG	DT	NWN	A	*Festuca rubra*	Creeping red fescue	S	M
				Glyceria occidentalis	Western mannagrass		
EG	DT		A	*Juncus effusus*	Soft (common) rush		
SEMI	DT			*Juncus patens*	Spreading rush		
SEMI	DT	NWN		*Juncus tenuis*	Slender rush		
EG			A	*Lolium perenne* – Var. dwarf	Dwarf ryegrass	S	
SEMI		NWN		*Oenanthe sarmentosa*	Water parsley		
SEMI		NWN		*Scirpus acutus*	Hardstem bulrush		
SEMI	DT	NWN		*Scirpus microcarpus*	Small-fruited bulrush		

EG = Evergreen

SEMI = Semi-evergreen

DT = Drought Tolerant/Resistant

NWN = Northwest Natives or Cultivars

A = Aggressive

S = Allowable as seed

M = Mowable

[a] Aggressive category indicates plants to be used with caution or avoided in confined sites (e.g., right-of-way plantings), near greenbelts, etc., due to maintenance concerns

Note: Plants with mature height over 3' should be grouped in masses no wider than 12' mature width with openings of minimum 10' between tall plant masses.

Note: Designer needs to respond to the size and aspect of the individual facility when selecting plants to be used.

Sand Filters

Table E.23. Recommended Plants for Sand Filters.

EG	DT	NWN	Agg[a]	Scientific Name	Common Name	BMP Comments	
						Application	Mowable
Basin Sides							
	DT	NWN		*Achillea millefolium*	Yarrow	S	
EG	DT			*Agrostis alba*	Redtop	S	M
EG	DT	NWN		*Agrostis exerata*	Spike bentgrass	S	M
EG	DT			*Agrostis palustris*	Creeping bentgrass	S	M
	DT			*Alopecurus pratensis*	Meadow foxtail	S	M
EG	DT	NWN		*Bromus carinatus*	California Brome	S	M
	DT	NWN		*Calamagrostis nutkaensis*	Pacific reed grass		
EG	DT	NWN		*Elymus glaucus*	Blue wildrye	S	M
EG	DT	NWN		*Elymus mollis*	Dune wildrye	S	M
EG	DT	NWN	A	*Juncus effusus*	Soft rush	S	
	DT	NWN		*Lupinus albicaulus*	Sickle keeled lupine	S	
EG	DT	NWN		*Luzula multiflora*	Field woodrush	S	
	DT		A	*Poa palustris*	Fowl bluegrass	S	M
EG			A	*Poa pratensis*	Kentucky bluegrass	S	M
Pond Bottom (Sand Surface)							
EG	DT			*Agrostis tenuis*	Colonial bentgrass (Highland strain good)	S	M
	DT			*Buchloe dactyloides*	Buffalo grass	S	M
	DT	NWN		*Camassia leichlinii or quamash*	camas		
EG	DT	NWN		*Carex mertensii*	Merten's sedge	S	
EG	DT	NWN		*Festuca elatior (arundinacea)*	Tall fescue	S	M
EG	DT	NWN		*Festuca elatior* "Many Mustang", "Silverado"	Dwarf tall fescues	S	M
EG	DT	NWN		*Fescue roemeri (idahoensis)*	Roemer's or Idaho fescue	S	
EG	DT	NWN		*Festuca rubra*	Red fescue	S	M
SEMI	DT	NWN		*Iris missouriensis*	Rocky Mountain iris		
EG	DT	NWN		*Juncus tenuis*	Slender rush	S	
EG	DT			*Lolium perenne*	Perennial ryegrass	S	M
EG	DT	NWN		*Luzula parviflora*	Small flowered woodrush	S	
EG	DT			*Trifolium repens*	White lawn clover	S	M
EG	DT			*Zoysia tenuifolia*	Korean grass	S	M

EG = Evergreen
SEMI = Semi-evergreen
DT = Drought Tolerant/Resistant
NWN = Northwest Natives or Cultivars

A = Aggressive
S = Allowable as seed
M = Mowable

[a] Aggressive category indicates plants to be used with caution or avoided in confined sites (e.g., right-of-way plantings), near greenbelts, etc., due to maintenance concerns

Note: Plants with mature height over 3' should be grouped in masses no wider than 8' mature size with openings of min. 10' between tall plant masses.

Note: Designer needs to respond to the size and aspect of the individual facility when selecting plants to be used.

Wet Ponds

Table E.24. Plants for Wet Pond Peripheries.

EG	DT	NWN	Agg[a]	Scientific Name	Common Name	BMP Comments	
						Application[b]	Mature Height
Trees to Provide Shading[c]							
	DT	NWN		*Acer circinatum*	Vine maple	W	25'
				Betula nigra	River birch	W	40'
EG		NWN		*Myrica californica*	Pacific wax myrtle		18'
				Nyssa Sylvatica	Tupelo	W	40'
		NWN		*Oemleria cerasiformis*	Indian plum		10'
		NWN		*Prunus emarginata*	Wild cherry		40'
				Taxus brevifolia	Pacific yew		40'
EG	DT	NWN		*Thuja plicata*	Western red cedar	W	40'
Small Trees/High Shrubs with Fibrous Roots for Berms							
		NWN		*Acer circinatum*	Vine maple	W	25'
		NWN		*Amelanchier alnifolia*	Serviceberry		25'
EG	DT			*Arbutus unedo*	Strawberry tree		25'
		NWN		*Comus Stolonifera*	Red twig dogwood	W	20'
		NWN		*Corylus comuta* var. *cornuta*	Filbert		20'
		NWN		*Physocarpus capitatus*	Pacific ninebark		12'
		NWN	A	*Rubus spectabillis*	Salmonberry	W	8'
		NWN		*Sambucus racemosa*	Red elderberry		10'
				Vaccinium opulus	Highbush cranberry		10'
				Vaccinium spp.	Blueberry		4'–12'
Low Shrubs and Grasses with Fibrous Roots for Berms							
EG		NWN		*Arctostaphylos uva-ursi*	Kinnikinnick		0.5'
				Cistus spp.	Rock rose		2'–4'
SEMI		NWN		*Deschampsia cespitosa*	Tufted hairgrass		3'
EG	DT			*Festuca arundinacea*	tall fescue grass		3'
EG	DT			*Festuca ovina duriuscula* (e.g., Reliant, Aurora)	Sheep fescue		1'
		NWN		*Festuca rubra*	red fescue	W	0.5'
EG		NWN		*Gaultheria shallon*	Salal		4'
				Helictotrichon sempervirens	blue oatgrass		3'
EG		NWN		*Ledum groenlandicum*	Labrador tea	W	5'
				Polystichum munitum	sword fern	W	4'
		NWN	A	*Symphoricarpus albus*	Snowberry		5'
			(A)	e.g., *Miscanthis, Pennisetum*	Ornamental grasses		varies

EG = Evergreen
SEMI = Semi-evergreen
DT = Drought Tolerant/Resistant
NWN = Northwest Natives or Cultivars
A = Aggressive
W = Wet Tolerant

[a] Aggressive category indicates plants to be used with caution or avoided in confined sites (e.g., right-of-way plantings), near greenbelts, etc., due to maintenance concerns

[b] Tolerant of occasional saturated soils or minimal inundation (< 6" depth) for short periods (< 72 hours).

[c] If BMP has a liner, designer should review plants accordingly; trees generally are not appropriate to liner conditions.

Note: Plants with mature height over 3' should be grouped in masses no wider than 8' mature size with openings of min. 10' between tall plant masses.

Note: Designer needs to respond to the size and aspect of the individual facility when selecting plants to be used.

Note: Many factors contribute to waterfowl use of ponds and adjacent areas. Designers should investigate site-specific conditions and best practice methods to discourage waterfowl use as necessary.

E-10. Drywell Sizing Tables

The City has determined that the most common small project overflow scenario consists of a drywell situated downstream of a bioretention cell or a permeable pavement facility. Table E.25 and Table E.26 specify the required area for drywells of 4-foot and 6-foot depths to be used as overflow/point of discharge downstream of a bioretention cell or a permeable pavement facility for parcel-based and single-family residential projects, respectively.

Table E.25. Parcel-Based Projects: Drywell Sizing Downstream of Bioretention Sized for 91% Infiltration or Permeable Pavement Facility.

Contributing Area (sf)	Drywell Area (sf)[a, b, c]	
	Drywell Depth = 4 ft	Drywell Depth = 6 ft
500	27	19
1,000	98	67
1,500	164	115
2,000	240	169
2,500	314	222
3,000	390	278
3,500	468	336
4,000	548	396
4,500	630	459
5,000	713	524

[a] Sizing was performed using a 5-minute computational time-step and the “Seattle 38” 158-year synthetic precipitation series.

[b] Drywell was sized to minimize the 25-year peak flow target to no more than 0.0001 cfs. Drywell design/modeling representation included a 4-foot or 6-foot depth, 25 percent porosity, 0.25 in/hr native soil infiltration rate, and a variable length and width.

[c] Bioretention design/modeling representation included 6 inches of ponding, 0.25 in/hr native soil infiltration rate, 3H:1V BMP side slopes, 12-inch bioretention soil thickness, 40 percent porosity, 3 in/hr bioretention soil infiltration rate, and a 12-inch overflow structure diameter.

Table E.26. Single-Family Residential Projects: Drywell Sizing Downstream of Bioretention Sized for 95% Infiltration or Permeable Pavement Facility

Contributing Area (sf)	Drywell Area (sf)	
	Drywell Depth = 4 ft	Drywell Depth = 6 ft
500	14	9
1,000	71	49
1,500	130	90
2,000	200	137
2,500	260	184
3,000	326	234
3,500	393	286
4,000	462	341
4,500	532	399
5,000	605	458

[a] Sizing was performed using a 5-minute computational time-step and the "Seattle 38" 158-year synthetic precipitation series.

[b] Drywell was sized to minimize the 25-year peak flow target to no more than 0.0001 cfs. Drywell design/modeling representation included a 4-foot or 6-foot depth, 25 percent porosity, 0.25 in/hr native soil infiltration rate, and a variable length and width.

[c] Bioretention design/modeling representation included 6 inches of ponding, 0.25 in/hr native soil infiltration rate, 3H:1V BMP side slopes, 12-inch bioretention soil thickness, 40 percent porosity, 3 in/hr bioretention soil infiltration rate, and a 12-inch overflow structure diameter.

Drywells that do not meet the above design criteria and the assumptions outlined below shall be sized to meet the Peak Control Standard per *Volume 3*, *Section 5.4.3*. For projects that discharge directly to a drywell (if a bioretention cell or permeable pavement facility are not feasible upstream), the drywell shall be sized to meet the Peak Control Standard per *Volume 3*, *Section 5.4.3*.