Administrative Design Review

Early Guidance Packet

T-Mobile Site # SE03813A - Gatewood Relo

Project: 3024025

Address: 101 Stewart St

Applicant: Jeremy Boone

AOR/EOR: B.J. Thomas, P.E.

Statement of Justification for T-Mobile SE03813A Gatewood Relo
Jurisdiction – City of Seattle
101 Stewart Street, Seattle, WA 98101

Description of Proposed Use

T-Mobile is proposing a Minor Communication Utility at 101 Stewart Street that will consist of five (5) panel antennas and three (3) microwave dish antennas mounted between three (3) sectors with a maximum RAD center of one hundred and seventy-one feet and six inches (171'-6") on the roof top of the existing 12 story building. All antennas will be located in a new RF screened stealth enclosure on top of the existing mechanical penthouse that will have a maximum height of 173'-10". All cabinet equipment will be located inside the existing mechanical penthouse.

ANTENNAS: Three (3) sectors will consist of two (2) panel antennas in alpha sector, two (2) panel antennas in beta sector, and one (1) panel antenna in gamma sector, for a total of five (5) panel antennas. T-Mobile proposes to add three (3) new 24" microwave dish antennas.

CABINETS: T-Mobile will be installing three (3) cabinets in the existing mechanical penthouse.

Requirements for Proposed Use

The site was selected because of the following:

- This location in the Downtown Mixed District was chosen as the least intrusive location per DR2013-19.
- The rooftop location is an encouraged location for Minor Communication Utilities and it meets all of the design, visual impact and screening requirements. The rooftop is considered as the least intrusive facility due to no available transmission tower or water tower located in the search ring.
- This location is the closest building to Pike Place Market within the search ring that meets T-Mobile's coverage objectives and isn't either currently under re-development or slated for future re-development.
- The proposed Minor Communication Utility is a replacement facility for T-Mobile's existing facility located one block due South at 111 Pine Street. The existing facility will be decommissioned upon completion of construction of the proposed facility.

Anticipated Impacts

As this is an unmanned facility, the site will not generate excessive traffic; will not cause any noise, air, light or water pollution. No noise, lights, dust or vibrations will be generated. There will be no environmental concerns as the radio frequency emissions will be within applicable Federal Communications Commission (FCC) guidelines. No lighting is proposed. There will be no visual impact to the adjoining properties as the antennas will be painted to match the existing mechanical penthouse. All other equipment will be enclosed within the existing mechanical penthouse and hidden from view.

Alternative Sites Considered

1902 2nd Avenue, Seattle, WA 98101 / Josephine Apartments
- The rooftop height is too high for RF requirements
- The building is a historic building that would require additional historic landmark review

116 Stewart Street, Seattle WA 98101 / Plymouth on Stewart

- The rooftop height is too low for RF requirements
- The rooftop does not have enough space for the installation and already exceeds the maximum coverage allowed of 35% of the roof top
- RF coverage will be blocked on the North and West sides of the building by adjacent high-rise buildings

City of Seattle Code Compliance Referencing 23.57.013 and 23.57.016

Please read each *italicized* response per each zoning ordinance below:

23.57.013 - Downtown zones

A. Permitted Uses. Minor communication utilities and accessory communication devices are permitted outright when meeting development standards of the zone in which the site is located, except for height limits, and subsection 23.57.013.B.

B. Development Standards.

1. Access to transmitting minor communication utilities and accessory communication devices shall be restricted to authorized personnel when located on rooftops or other common areas. Warning signs at every point of access to the rooftop or common area shall be posted with information on the existence of radiofrequency radiation.

    - *This requirement will be met. Additionally, the property manager has confirmed that there are no tenant amenities on the rooftop.*

2. Height.

    a. Except for special review, historic and landmark districts (see Section 23.57.014), minor communication utilities and accessory communication devices may be located on rooftops of buildings, including sides of parapets and equipment penthouses above the roofline, as follows:

        1) Those utilities and devices located on a rooftop of a building nonconforming as to height may extend up to 15 feet above the height of the building existing as of November 1, 2002;

        - *The 10-foot increase in height of the new structure is within the 15-foot requested extension of the existing building height.*

        2) Those utilities and devices located on a rooftop may extend up to 15 feet above the applicable height limit or above the highest portion of the building, whichever is less.

        - *The antennas and stealth enclosure will extend 10 feet above the highest portion of the building.*

The additional height permitted in 23.57.013.B.2.a.(1) and (2) is permitted if the combined total of communication utilities and accessory communication devices in addition to the roof area occupied by rooftop features listed in Section 23.49.008.D.2, does not exceed 35 percent of the total rooftop area.

- *The equipment will not exceed 35 percent of the total roof top area per the attached drawings.*

    b. The height of minor communications utilities and accompanying screening may be further increased through the design review process, not to exceed 10 percent of the applicable height limit for the structure. For new buildings this increase in height may be granted through the design review process provided for in Section 23.41.014. For minor communication utilities on existing buildings this increase in height may be granted through administrative design review provided for in Section 23.41.016.

    - *The 10-foot increase in height is within the 10% standards of this building. Since the height of the building is already above the allotted height limit in the zone, a design review is requested.*

3. Visual Impacts. All minor communication utilities and accessory communication devices, except for facilities located on buildings designated by the Seattle Landmarks Preservation Board, facilities governed by Section 23.57.014, and amateur radio towers, shall meet the standards set forth in Section 23.57.016.

    - *These standards will be met. See comments to Section 23.57.016.*

4. Antennas may be located on rooftops of buildings, including sides of parapets above the roofline. Rooftop space within the following parameters do not count toward meeting open space requirements: the area 8 feet away from and in front of a directional antenna and at least 2 feet from the back of a directional antenna, or, for an omnidirectional antenna, 8 feet away from the antenna in all directions. Public Health—Seattle & King County may require a greater distance for paging facilities after review of the Non-Ionizing Electromagnetic Radiation (NIER) report.

    - *This requirement will be met.*

C. Reception Window Obstruction. When, in the case of an accessory communications device or minor communications utility that would otherwise comply with this section, the strict adherence to all development standards would result in reception window obstruction in all permissible locations on the subject lot, the Director may grant a waiver from the development standards of this section and Section 23.57.016, subject to the following criteria:

1. The applicant shall demonstrate that the obstruction is due to factors beyond the control of the property owner, taking into account potential permitted development on adjacent and neighboring lots with regard to future reception-window obstruction.

    - *Not applicable and not being requested.*

2. The applicant shall use material, shape and color to minimize visual impact.

    - *See responses below in Section 23.57.016.*

23.57.016 - Visual impacts and design standards.

A. Telecommunication facilities shall be integrated with the design of the building to provide an appearance as compatible as possible with the structure. Telecommunication facilities, or methods to screen or conceal facilities, shall result in a cohesive relationship with the key architectural elements of the building.

    - *The new stealthed enclosure will be located on top of the existing mechanical penthouse and painted to match the building. The enclosure's screen will be made out of FRP material and painted to match the existing mechanical penthouse. All other equipment will be located inside the existing mechanical penthouse and hidden from view. As shown on the attached photo simulations, the stealthed enclosure will be unobtrusive and will not be visible from street level near the building.*

B. If mounted on a pitched roof, facilities shall be screened by materials that maintain the pitch of the roof, matching color and texture as closely as possible, or integrated with and enclosed within structures such as dormers or gables compatible with the roof design. See exhibit 23.57.016 B.

    - *Not applicable.*

C. If mounted on a flat roof, screening shall extend to the top of communication facilities except that whip antennas may extend above the screen as long as mounting structures are screened. Screening for satellite dishes is addressed in subsection E, below. Said screening shall be integrated with architectural design, material, shape and color. Facilities in a separate screened enclosure shall be located near the center of the roof, if technically feasible. Facilities not in a separate screened enclosure shall be mounted fiat against existing stair and elevator penthouses or mechanical equipment enclosures and shall be no taller than such structures.

    - *The new stealthed enclosure will be located on top of the existing mechanical penthouse and painted to match the building. The enclosure's screen will be made out of FRP material and painted to match the existing mechanical penthouse. All other equipment will be located inside the existing mechanical penthouse and hidden from view. As shown on the attached photo simulations, the stealthed enclosure will be unobtrusive and will not be visible from street level near the building.*

D. Facilities that are side-mounted on buildings shall be integrated with architectural elements such as window design or building decorative features, or screened by siding or other materials matching the building exterior, or otherwise be integrated with design, material, shape, and color so as to not be visibly distinctive. In general, antennas shall be as unobtrusive as practicable, including the use of non-reflective materials. Installations on the primary building facade shall be allowed only if roof, ground-mounted, or secondary facade mounted installation is technically unfeasible.

    - *Not applicable.*

E. Satellite dishes that are not located on freestanding transmission towers shall be screened to the top of the dish on at last three (3) sides and shall be enclosed in the direction of the signal to the elevation allowed by the azimuth of the antenna. If screening on the remaining side is not to the top of the antenna, the antenna and the inside and outside of the screen shall be painted the same color to minimize visibility and mask the contrasting shape of the dish with building or landscape elements.

    - *Not applicable.*

F. New antennas shall be consolidated with existing antennas and mechanical equipment unless the new antennas can be better obscured or integrated with the design of other parts of the building.

    - *Not applicable; there are no existing antennas on the roof top.*

G. Antennas mounted on a permitted accessory structure, such as a free standing sign, shall be integrated with design, material, shape and color and shall not be visibly distinctive from the structure.

    - *Not applicable.*

H. A screen for a ground-mounted dish antenna shall be a minimum six (6) feet tall and shall extend to the top of the dish. The screen may be in the form of a view-obscuring fence, wall or hedge that shall be maintained in good condition. Chain link, plastic or vinyl fencing/screening is prohibited.

    - *Not applicable.*

I. Antennas attached to a public facility, such as a water tank, shall be integrated with the design, material, shape and color of, and shall not be visibly distinctive from, the public facility. Antennas attached to City-owned poles shall follow the terms and conditions contained in Section 15.32.300.

    - *Not applicable.*

J. Freestanding transmission towers shall minimize external projections from the support structure to reduce visual impacts and to the extent feasible shall integrate antennas in a screening structure with the same dimensions as external dimensions of the support structure, or shall mount antennas with as little projection from the structure as feasible. External conduits, climbing structures, fittings, and other projections from the external face of the support structure shall be minimized to the extent feasible.

- *Not applicable.*

Design Guideline Concerns

Urban Pattern and Form

A. Locaiton in the City and neighborhood
   a. Our screened shelter will be located on a high-rise building that is determined to be excellent for antenna coverage in the nearby neightborhood
B. Adjacent Sites, streets and open spaces
   a. The areas around the facility include the broadacres Building to the west with a present use of Office Building, apartments to the south with the present use of Apartments, Thompson Seattle Hotel and Apartments to the north with the present use of Hotel/Motel and Inn At The Market with a present use of Hotel/Motel to the south. Our current use is an Office Building within the DMC-125 district. The office building is located on the corner of 1st Avenue and Stewart Street and enclosed by 2nd Avenue and Pine Street.
C. Relationship to the block
   a. The block Is composed of office building and other mixed commercial locations. Pikes Peak Market is across the street and the requested colocation of T-Mobile's facililty would represent an increase of coverage and capacity for residents, workforce and tourists of the nearby area. Improved E911 technology services can also assist in times of emergency.
D. Height, bulk and scale
   a. T-Mobile is proposing a Minor Communication Utility at 101 Stewart Street that will consist of six five (56) panel antennas and one three (31) microwave dish antennas mounted between three (3) sectors with a maximum RAD center of one hundred and seventy-one (170) feet and six inches (171'-6") on the roof top of the existing 12 story building. All antennas will be located in a new RF screened stealth enclosure on top of the existing mechanical penthouse that will have a maximum height of 173'-10". All cabinet equipment will be located inside the existing mechanical penthouse.

Architectural Context and Character

A. The design of the faux penthouse will be painted to match the design of the building at 101 Stewart Street. The installation will look to be an addition to the existing facility and be made to match the existing exterior colors.

Walkability – Safety and Security

The rooftop is locked and not accessible to the residents of the office building. The wireless communication facility will be designed to the the safety standards required by the FCC and will include appropriate signage.

Project Uses and Activities

A. Arrangement of Interior Uses
   a. As this will be an unmanned facility, there will be no changes to any of the existing interior uses in the office building located at 101 Stewart Street
B. Parking and Service uses
   a. As this will be an unmanned facility, parking and service uses will not be required. Service workers will utilize existing parking means and will apply for any traffic permits dependent upon the installation requirements of the facility.

Architectural Concept

A. Massing
   a. The new screened extension will be a 10 feet tall by 10 feet wide.
B. Architectual and Façade composition
   a. The screened facility will be designed and painted to match the exterior grey penthouse walls. The design will be made to look like an extension of the existing building
C. Secondary Architectual Features
   a. There will be no secondary architectural features.
D. Scale and Texture
   a. The screened extension will be 10 feet tall by 10 feet wide. It will utilze fiberglass RF material that allows the transmission of the antennas. It will be painted to match the exterior of the penthouse.
E. Form and Function
   a. The function of this facility will be to provide a wireless communications facility located on the rooftop of 101 Stewart Street but a the same time providing screening to make it look like an extension of the building. The property owner was not favorable to flush mounting antennas on the side of their penthouses. It was decided that the best course of design would be to include an extended 10' tall faux penthouse on top of the existing mechanical penthouse.

Open Space Concept

A. Building-Open Space Relationship
   a. As this is an office building, there are no open space amenities located on the rooftop for the staff of the building. The rooftop is strictly used for mechanical and maintenance purposes.
B. Open Spaces Uses and Activities
   a. As this is an office building, there are no open space amenities located on the rooftop for the staff of the building. The rooftop is strictly used for mechanical and maintenance purposes.
C. Design
   a. The design of the 10' tall faux penthouse screening enclosure has been styled to match the exiting mechanical penthouse. The new enclosure will look like a natural addition to 101 Stewart Street

Exterior Elements and Materials

a. The screened extension will be 10 feet tall by 10 feet wide. It will utilize fiberglass RF material that allows the transmission of the antennas. It will be painted to match the exterior of the mechanical penthouse. All antennas, mounts and additional equipment to be located on the facility will be primarily screened by the new enclosure. Cabling on the rooftop will route it to the equipment platform located within the penthouse.

Other Information

If you have any further questions or comments concerning this application, please feel free to contact me at 708-473-2453, or via email at: jeremy.boone@sacw.com. I thank you in advance for your kind courtesies and attention with respect to this application.

T · · Mobile

GATEWOOD RELO

101 STEWART ST
SEATTLE, WA 98101

SITE NUMBER: SE03813A

LATITUDE 47° 36' 37.75" N (47.610486) **LONGITUDE 122° 20' 27.15" W (-122.340875)**

GROUND ELEVATION: 145.5' AMSL

SAC WIRELESS

LANDLORD SIGNATURE: _____

GENERAL LOCATION MAP

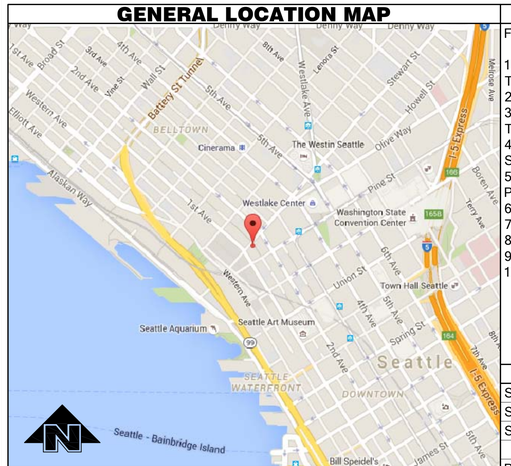

VICINITY MAP

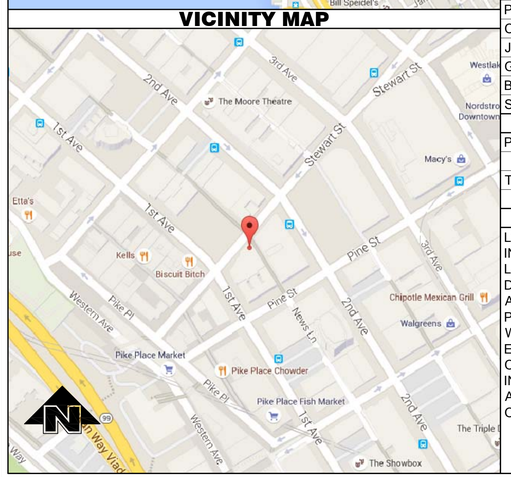

DRIVING DIRECTIONS

FROM T-MOBILE BOTHELL 4 OFFICE:

1. START OUT GOING SOUTH ON N CREEK PKWY TOWARD NE 195TH ST. 0.3 MI
2. TURN RIGHT ONTO NE 195TH ST. 0.3 MI
3. MERGE ONTO I-405 S VIA THE RAMP ON THE LEFT TOWARD RENTON. 9.1 MI
4. MERGE ONTO WA-520 W VIA EXIT 14 TOWARD SEATTLE (PORTIONS TOLL). 7.0 MI
5. TAKE THE I-5 S EXIT ON THE LEFT TOWARD PORTLAND. 0.09 MI
6. MERGE ONTO I-5 S. 2.3 MI
7. MERGE ONTO UNION ST VIA EXIT 165B. 0.4 MI
8. TURN RIGHT ONTO 3RD AVE. 0.2 MI
9. TURN LEFT ONTO STEWART ST. 0.1 MI
10. 101 STEWART ST IS ON THE LEFT.

ZONING INFORMATION

SITE NUMBER:	SE03813A
SITE NAME:	GATEWOOD RELO
SITE ADRESS:	101 STEWART ST
	SEATTLE, WA 98101
PARCEL #:	1977200020
CURRENT ZONING:	DMC-125
JURISDICTION:	CITY OF SEATTLE
GOVERNING CODE:	2012 SBC
BUILDING TYPE:	--
SITE TYPE:	UNSTAFFED TELECOMM FACILITY

UTILITY PURVEYOR

POWER COMPANY:	SEATTLE CITY LIGHT
TELCO COMPANY:	CENTURYLINK

LEGAL DESCRIPTION

LOT 8 AND THE NORTHWESTERLY 49 FEET OF LOT 9 IN BLOCK 27 OF ADDITION TO TOWN OF SEATTLE, AS LAID OUT BY A.A. DENNY (COMMONLY KNOWN AS A.A. DENNY'S 6TH ADDITION TO THE CITY OF SEATTLE), ACCORDING TO PLAT RECORDED IN VOLUME 1 OF PLATS, AT PAGE(S) 99, RECORDS OF KING COUNTY, WASHINGTON;
EXCEPT THE SOUTHWESTERLY 9 FEET THEREOF CONDEMNED FOR THE WIDENING OF FIRST AVENUE IN KING COUNTY SUPERIOR COURT CAUSE NO. 7092, AS PROVIDED BY ORDINANCE NO. 1129 OF THE CITY OF SEATTLE.

PROJECT TEAM

PROPERTY OWNER:	L&B CIP FIRST & STEWART LLC 101 STEWART ST SEATTLE, WA 98101
CONSTRUCTION MANAGER:	SAC WIRELESS JOHN REGO 2018 156TH AVE NE, STE 108 BELLEVUE, WA 98007
SITE ACQUISITION:	SAC WIRELESS ABBIE HENRY 2018 156TH AVE NE, SUITE 108 BELLEVUE, WA 98007 PHONE #: 763-607-7487 abigail.henry@sacw.com
ZONING:	SAC WIRELESS JEREMY BOONE 2018 156TH AVE NE, STE 108 BELLEVUE, WA 98007
RF ENGINEER:	T-MOBILE TRI TRAN 19807 NORTH CREEK PKWY N BOTHELL, WA 98011
SURVEYOR:	DUNCANSON COMPANY 145 SW 155TH STREET, SUITE 102 SEATTLE, WA 98166 PHONE: (206) 244-4141
CONSULTING ENGINEER:	B.J. THOMAS, P.E. 7607 80TH AVE NE MARYSVILLE, WA 98270 PHONE #: 206-851-1106

PROJECT DESCRIPTION

T-MOBILE TO MOUNT PROPOSED (5) ANTENNAS, (3) MICROWAVES, (3) FRIG, (2) FXFC, (3) FRIA, (3) FRLB, (8) AWS/PCS DIPLEXERS, & (2) COVP (1 AT TOP, 1 AT BOTTOM) WITHIN PROPOSED 8'-0" x 8'-0" x 10'-0" SCREEN ON EXISTING PENTHOUSE.
PROPOSED T-MOBILE CABINETS, RAC57 AND FCOA ON PROPOSED 10'-0" x 7'-0" STEEL PLATFORM.
PROPOSED (1) 100' HYBRID CABLE & (3) 1/2" COAX FEEDERS FOR MICROWAVES.

PROJECT INFORMATION

THIS IS UNSTAFFED AND RESTRICTED EQUIPMENT AND WILL BE USED FOR THE TRANSMISSION OF RADIO SIGNALS FOR THE PURPOSE OF PROVIDING PUBLIC CELLULAR SERVICE.
T-MOBILE CERTIFIES THAT THIS TELEPHONE EQUIPMENT FACILITY WILL BE SERVICED ONLY BY T-MOBILE EMPLOYEES AND THE WORK ASSOCIATED WITH ANY EQUIPMENT CANNOT BE PERFORMED BY HANDICAPPED PERSONS. THIS FACILITY WILL BE FREQUENTED ONLY BY SERVICE PERSONNEL FOR REPAIR PURPOSES. PURSUANT TO THE AMERICANS WITH DISABILITIES ACT (ADA), APPENDIX B SECTION 4.11. (5)(b), THIS FACILITY IS EXEMPT FROM THAT ACT.
NO POTABLE WATER SUPPLY IS TO BE PROVIDED AT THIS LOCATION.
NO WASTE WATER OR SOLID WASTE WILL BE GENERATED AT THIS LOCATION.
T-MOBILE MAINTENANCE CREW (ONE PERSON) WILL MAKE AN AVERAGE OF ONE TRIP PER MONTH AT ONE HOUR PER TRIP.

CODE COMPLIANCE

ALL WORK AND MATERIALS SHALL BE PERFORMED AND INSTALLED IN ACCORDANCE WITH THE CURRENT EDITIONS OF THE FOLLOWING CODES AS ADOPTED BY THE LOCAL GOVERNING AUTHORITIES. NOTHING ON THESE PLANS IS TO BE CONSTRUCTED TO PERMIT WORK NOT CONFORMING TO THESE CODES:
2012 SEATTLE BUILDING CODE
2012 INTERNATIONAL MECHANICAL CODE
2012 INTERNATIONAL FUEL GAS CODE
2012 NFPA 54 - NATIONAL FUEL GAS CODE (PROPANE INSTALLATIONS ONLY)
2011 NFPA 58 - LIQUEFIED PETROLEUM GAS CODE (PROPANE INSTALLATIONS ONLY)
2012 INTERNATIONAL FIRE CODE
2012 UNIFORM PLUMBING CODE
2014 NATIONAL ELECTRICAL CODE
2007 NATIONAL ELECTRIC SAFETY CODE
LOCAL BUILDING CODE ORDINANCES
ANSI / TIA / EIA - 222 - G
NFPA-101 - LIFE SAFETY CODE

DRAWING INDEX

T-1	TITLE SHEET & PROJECT DATA
G-1	GENERAL NOTES
A-1	OVERALL SITE PLAN
A-1.1	ENLARGED SITE PLAN
A-2	EXISTING WEST ELEVATION
A-2.1	PROPOSED WEST ELEVATION
A-2.2	EXISTING EAST ELEVATION
A-2.3	PROPOSED EAST ELEVATION
A-2.4	EXISTING NORTH ELEVATION
A-2.5	PROPOSED NORTH ELEVATION
A-2.6	EXISTING SOUTH ELEVATION
A-2.7	PROPOSED SOUTH ELEVATION
A-3	BTS EQUIPMENT DETAILS
A-4	GENERAL DETAILS
A-5	GENERAL DETAILS
A-6	GENERAL DETAILS
A-7	EQUIPMENT MOUNTING DETAILS
A-8	ANTENNA MOUNTING DETAILS
SV1	LAND SURVEY (BY OTHERS)
E-1	ELECTRICAL GROUNDING PLAN
E-2	ELECTRICAL GROUNDING DETAILS
E-3	ELECTRICAL GROUNDING DETAILS
E-4	ELECTRICAL GROUNDING DETAILS
RF-1	RF DETAILS
RF-2	RF DETAILS
S1.1, S2.1, S3.1, S3.2	STRUCTURAL SHEETS (BY OTHERS)

APPROVAL/SIGN OFF OF CONST DRAWINGS

REVIEWERS SHALL CLEARLY PLACE INITIALS ADJACENT TO EACH REDLINE NOTE AS DRAWINGS ARE BEING REVIEWED.

CONSULTANT GROUP SIGN OFF

LANDLORD'S REPRESENTATIVE:	DATE:
CONSTRUCTION MANAGER:	DATE:
CONSTRUCTION PROJECT MANAGER:	DATE:
PROJECT MANAGER:	DATE:
SITE ACQUISITION:	DATE:
ZONING:	DATE:
RF ENGINEER:	DATE:

SAFETY PRECAUTION SHALL BE IMPLEMENTED BY CONTRACTOR(S) AT ALL TRENCHING IN ACCORDANCE WITH CURRENT OSHA STANDARDS

CALL TWO WORKING DAYS BEFORE YOU DIG

811

NATIONAL UTILITIES UNDERGROUND LOCATE

ELECTRIC - RED
SEWER - GREEN
GAS/OIL - YELLOW
SURVEY - PINK
TEL/CATV - ORANGE
PROPOSED - WHITE
WATER - BLUE

T · · Mobile

PROJECT INFORMATION:

GATEWOOD RELO
SE03813A

101 STEWART ST
SEATTLE, WA 98101

ISSUED FOR:

BUILDING PERMIT

REVISION HISTORY:

NO.	DATE:	DESCRIPTION:	CHK. BY:
10	6/29/2016	REV CALLOUTS PER EMAIL COMMENTS	BJT
9	6/22/2016	ADD GAMMA STYLE SHEET & UPDATE GAMMA CALLS	BJT
8	6/24/2016	ADD ROOF COVERAGE SHADOWBOX NOTE	BJT
7	6/13/2016	REVISED PER REDLINES	BJT
6	3/23/2016	ADD LATEST STRUCTURAL SHEETS TO DRAWING SET	BJT
5	3/2/2016	REV LOCATION OF SECTORS TO WITHIN NEW SCREEN	BJT
4	12/28/2015	REV PER STRUCTURAL	BJT
3	12/2/2015	REV PER REDLINES: ADDTIONAL REDLINES	BJT
2	12/1/2015	REV PER REDLINES	BJT
1	11/23/2015	ISSUED DESIGN REVIEW	BJT

PLANS PREPARED BY:

B. J. THOMAS, P.E.
7607 80TH AVE NE
MARYSVILLE, WA 98270
206-851-1106

DRAWN BY: AAL **CHK. BY:** BJ

LICENSURE:

B. J. THOMAS · STATE OF WASHINGTON · 37041 · REGISTERED PROFESSIONAL ENGINEER

JURISDICTIONAL APPROVAL:

DRAWING TITLE:

TITLE SHEET

DRAWING NUMBER:

T-1

GENERAL NOTES:

1. DRAWINGS ARE NOT TO BE SCALED, WRITTEN DIMENSIONS TAKE PRECEDENCE, THIS SET OF DOCUMENTS IS INTENDED TO BE USED FOR DIAGRAMMATIC PURPOSED ONLY, UNLESS NOTED OTHERWISE. THE GENERAL CONTRACTOR'S SCOPE OF WORK SHALL INCLUDE FURNISHING ALL MATERIALS, EQUIPMENT, LABOR AND ANY REQUIREMENTS DEEMED NECESSARY TO COMPLETE INSTALLATION AS DESCRIBED IN THE DRAWINGS AND OWNER'S PROJECT MANUAL.

2. THE CONTRACTOR IS RESPONSIBLE FOR ALL DIMENSIONS AND STANDARDIZED DETAILS THAT REQUIRE MODIFICATIONS DUE TO ACTUAL FIELD CONDITIONS AND REQUIREMENTS MUST BE SUBMITTED TO AND APPROVED BY, T-MOBILE WIRELESS REPRESENTATIVE PRIOR TO START OF WORK.

3. PRIOR TO THE SUBMISSION OF BIDS, CONTRACTORS INVOLVED SHALL VISIT THE JOB SITE TO FAMILIARIZE THEMSELVES WITH ALL CONDITIONS AFFECTING THE PROPOSED PROJECT. CONTRACTORS SHALL VISIT THE CONSTRUCTION SITE WITH THE CONSTRUCTION/CONTRACT DOCUMENTS TO VERIFY FIELD CONDITIONS AND CONFIRM THAT THE PROJECT WILL BE ACCOMPLISHED AS SHOWN. PRIOR TO PROCEEDING WITH CONSTRUCTION, ANY ERRORS, OMISSIONS, OR DISCREPANCIES SHALL BE BROUGHT TO THE ATTENTION OF THE ARCHITECT/ENGINEER VERBALLY AND IN WRITING.

4. THE GENERAL CONTRACTOR SHALL RECEIVE WRITTEN AUTHORIZATION TO PROCEED WITH CONSTRUCTION PRIOR TO STARTING WORK ON ANY ITEM NOT CLEARLY DEFINED BY THE CONSTRUCTION DRAWINGS/CONTRACT DOCUMENTS.

5. THE CONTRACTOR SHALL SUPERVISE AND DIRECT THE PROJECT DESCRIBED IN THE CONTRACT DOCUMENTS. THE CONTRACTOR SHALL BE SOLELY RESPONSIBLE FOR ALL CONSTRUCTION MEANS, METHODS, TECHNIQUES, SEQUENCES, SAFETY, AND PROCEDURES FOR COORDINATING ALL PORTIONS OF THE WORK UNDER THE CONTRACT.

6. THE CONTRACTOR SHALL INSTALL ALL EQUIPMENT AND MATERIALS ACCORDING TO MANUFACTURER'S/VENDOR'S SPECIFICATIONS UNLESS NOTED OTHERWISE OR WHERE LOCAL CODES OR ORDINANCES TAKE PRECEDENCE.

7. ALL WORK PERFORMED ON THE PROJECT AND MATERIALS INSTALLED SHALL BE IN STRICT ACCORDANCE WITH ALL APPLICABLE CODES, REGULATIONS, AND ORDINANCES. CONTRACTOR SHALL GIVE ALL NOTICES AND COMPLY WITH ALL LAWS, ORDINANCES, RULES, REGULATIONS AND LAWFUL ORDERS OF ANY PUBLIC AUTHORITY, MUNICIPAL AND UTILITY COMPANY SPECIFICATIONS, AND LOCAL AND STATE JURISDICTIONAL CODES BEARING ON THE PERFORMANCE OF THE WORK.

8. GENERAL CONTRACTOR SHALL PROVIDE, AT THE PROJECT SITE, A FULL SET OF CONSTRUCTION DOCUMENTS UPDATED WITH THE LATEST REVISIONS INVOLVED WITH THE PROJECT. THIS SET IS A VALID CONTRACT DOCUMENT ONLY IF THE TITLE SHEET IS STAMPED IN RED INK "FOR CONSTRUCTION" AND EACH SUCCESSIVE SHEET BEARS THE ARCHITECT'S/ENGINEER'S SIGNED WET STAMP.

9. THE CONTRACTOR IS RESPONSIBLE FOR ADEQUATELY BRACING AND PROTECTING ALL WORK DURING CONSTRUCTION AGAINST DAMAGE, BREAKAGE, COLLAPSE, ETC. ACCORDING TO APPLICABLE CODES, STANDARDS, AND GOOD CONSTRUCTION PRACTICES.

10. THE CONTRACTOR SHALL MEET ALL OSHA REQUIREMENTS FOR ALL INSTALLATIONS.

11. THE CONTRACTOR SHALL BE RESPONSIBLE FOR ALL DAMAGES TO THE EXISTING CONSTRUCTION AND REPAIR ALL DAMAGES TO BETTER THAN NEW CONSTRUCTION. THE CONTRACTOR SHALL NOTIFY THE CONSULTANT OF ANY DAMAGE TO THE BUILDING SITE OR ANY ADJACENT STRUCTURES AROUND THE PROJECT. THE T-MOBILE REPRESENTATIVE SHALL BE SOLE AND FINAL JUDGE AS TO THE QUALITY OF THE REPAIRED CONSTRUCTION. ANY ADDITIONAL MODIFICATIONS WHICH MUST BE MADE SHALL BE MADE AT THE CONTRACTOR'S EXPENSE.

12. WHERE NEW PAVING, CONCRETE SIDEWALKS OR PATHS MEET EXISTING CONSTRUCTION, THE CONTRACTOR SHALL MATCH THE EXISTING PITCH, GRADE, AND ELEVATION SO THE ENTIRE STRUCTURE SHALL HAVE A SMOOTH TRANSITION.

13. THE CONTRACTOR SHALL MODIFY THE EXISTING FLOORS, WALL, CEILING, OR OTHER CONSTRUCTION AS REQUIRED TO GAIN ACCESS TO AREAS FOR ALL MECHANICAL, PLUMBING, ELECTRICAL, OR STRUCTURAL MODIFICATIONS. WHERE THE EXISTING CONSTRUCTION DOORS, PARTITIONS, CEILING, ETC., ARE TO BE REMOVED, MODIFIED, OR REARRANGED OR WHERE THE EXPOSED OR HIDDEN MECHANICAL, ELECTRICAL, SYSTEMS ARE ADDED OR MODIFIED, THE GENERAL CONTRACTOR SHALL REPAIR, PATCH AND MATCH ALL EXISTING CONSTRUCTION AND FINISHES OF ALL FLOORS WALLS AND CEILINGS. WHERE CONCRETE MASONRY CONSTRUCTION IS MODIFIED, THE CONTRACTOR SHALL TOOTH IN ALL NEW CONSTRUCTION TO MATCH THE EXISTING BOND. WHERE CONCRETE CONSTRUCTION IS MODIFIED, THE CONTRACTOR SHALL VERIFY THE EXACT DETAILS TO BE USED FOR CONSTRUCTION. ALL WORK SHALL BE COVERED UNDER THE GENERAL CONTRACT.

14. IF CONTRACTOR OR SUBCONTRACTOR FIND IT NECESSARY TO DEVIATE FROM ORIGINAL APPROVED PLANS, THEN IT IS THE CONTRACTOR'S AND THE SUBCONTRACTOR'S RESPONSIBILITY TO PROVIDE THE CONSULTANT WITH 4 COPIES OF THE PROPOSED CHANGES FOR HIS APPROVAL BEFORE PROCEEDING WITH THE WORK. IN ADDITION THE CONTRACTOR AND SUBCONTRACTORS SHALL BE RESPONSIBLE FOR PROCURING ALL NECESSARY APPROVALS FROM THE BUILDING AUTHORITIES FOR THE PROPOSED CHANGES BEFORE PROCEEDING WITH THE WORK. THE CONTRACTOR AND SUBCONTRACTORS SHALL BE RESPONSIBLE FOR PROCURING ALL NECESSARY INSPECTIONS AND APPROVALS FROM BUILDING AUTHORITIES DURING THE EXECUTION OF THE WORK.

15. CONTRACTOR TO PROVIDE A PORTABLE FIRE EXTINGUISHER WITH A RATING OF NOT LESS THAN 2-A OR 2-A10BC WITHIN 75 FEET TRAVEL DISTANCE TO ALL PORTIONS OF PROJECT AREA DURING CONSTRUCTION.

16. THE CONTRACTOR SHALL PERFORM WORK DURING OWNER'S PREFERRED HOURS TO AVOID DISTURBING NORMAL BUSINESS.

17. SEAL ALL PENETRATIONS THROUGH FIRE-RATED AREAS WITH U.L. LISTED OR FIRE MARSHAL APPROVED MATERIALS AS APPLICABLE TO THIS FACILITY AND OR PROJECT SITE.

18. CONTRACTOR SHALL BE RESPONSIBLE FOR UTILITY LOCATES, SCHEDULING, COORDINATING SPECIAL AND BUILDING DEPARTMENT INSPECTIONS.

19. CONTRACTOR SHALL BE RESPONSIBLE FOR CONTACTING AND UTILIZING ORIGINAL ROOFING CONTRACTOR AS REQUIRED TO MAINTAIN ANY EXISTING ROOFING WARRANTY.

20. ROUTING OF ALL CONDUITS, CABLES, CABLE TRAYS ETC ARE INDICATED AS PROPOSED LOCATION ONLY. CONFIRM THE EXACT LOCATION AND ROUTING WITH THE ON SITE T-MOBILE CONSTRUCTION MANAGER PRIOR TO STARTING WORK.

CONCRETE NOTES:

1. ALL CONCRETE WORK SHALL BE IN ACCORDANCE WITH THE ACI 301, ACI 318 AND THE SPECIFICATION CAST-IN-PLACE CONCRETE.

2. ALL CONCRETE SHALL HAVE A MINIMUM COMPRESSIVE STRENGTH OF 3000 PSI AT 28 DAYS UNO.

3. REINFORCING STEEL SHALL CONFORM TO ASTM A 615, GRADE 60, DEFORMED UNLESS NOTED OTHERWISE. WELDED WIRE FABRIC SHALL CONFORM TO ASTM A 185 WELDED STEEL WIRE FABRIC UNLESS NOTED OTHERWISE. SPLICES CLASS "B" AND ALL HOOKS SHALL BE STANDARD UNO.

4. THE FOLLOWING MINIMUM CONCRETE COVER SHALL BE PROVIDED FOR REINFORCING STEEL UNLESS SHOWN OTHERWISE ON DRAWINGS: CONCRETE CAST AGAINST EARTH - 3 IN. CONCRETE EXPOSED TO EARTH OR WEATHER:
#6 AND LARGER .....2 IN.
#5 AND SMALLER & WWF .....11/2 IN.

5. A 1/2" TROWELED RADIUS SHALL BE PROVIDED AT ALL EXPOSED EDGES OF CONCRETE UNO. HOLES TO RECEIVE EXPANSION/WEDGE ANCHORS SHALL BE 1/8" LARGER IN DIAMETER THAN THE ANCHOR BOLT, DOWEL OR ROD AND SHALL CONFORM TO MFR RECOMMENDATION FOR EMBEDMENT DEPTH OR AS SHOWN ON THE DRAWINGS. AVOID CUTTING EXISTING REBAR WHEN DRILLING HOLES IN THE ELEVATED SLAB.

6. INSTALLATION OF CONCRETE EXPANSION/WEDGE ANCHOR, SHALL BE PER MANUFACTURER'S WRITTEN RECOMMENDED PROCEDURES.

7. FLOAT SURFACE SHALL BE A SMOOTH FINISH. SURFACE SHALL BE FREE OF ALL OBVIOUS DEPRESSIONS. SURFACE SHALL BE SLOPED AT 2 % TO PROMOTE DRAINAGE AWAY FROM EQUIPMENT.

SITE WORK NOTES:

1. RUBBISH, STUMPS, DEBRIS, STICKS, STONES AND OTHER REFUSE SHALL BE REMOVED FROM THE SITE AND DISPOSED OF LEGALLY.

2. THE SITE SHALL BE GRADED TO CAUSE SURFACE WATER TO FLOW AWAY FROM THE PCS EQUIPMENT, TOWER AREAS, AND ADJACENT BUILDINGS.

3. NO FILL OR EMBANKMENT MATERIAL SHALL BE PLACED ON FROZEN GROUND. FROZEN MATERIALS, SNOW OR ICE SHALL NOT BE PLACED IN ANY FILL OR EMBANKMENT.

4. THE SUBGRADE SHALL BE COMPACTED AND BROUGHT TO A SMOOTH UNIFORM GRADE PRIOR TO THE CRUSHED STONE APPLICATION.

5. ALL EXISTING ACTIVE SEWER, WATER, GAS, ELECTRIC, AND OTHER UTILITIES WHERE ENCOUNTERED IN THE WORK, SHALL BE PROTECTED AT ALL TIMES, AND WHERE REQUIRED FOR THE PROPER EXECUTION OF THE WORK, SHALL BE RELOCATED AS DIRECTED BY ENGINEERS. EXTREME CAUTION SHOULD BE USED BY THE CONTRACTOR WHEN EXCAVATING OR PIER DRILLING AROUND OR NEAR UTILITIES. CONTRACTOR SHALL PROVIDE SAFETY TRAINING FOR THE WORKING CREW.

6. ALL EXISTING INACTIVE SEWER, WATER, GAS, ELECTRIC AND OTHER UTILITIES, WHICH INTERFERE WITH THE EXECUTION OF THE WORK, SHALL BE REMOVED AND SHALL BE CAPPED, PLUGGED OR OTHERWISE DISCONTINUED AT POINTS WHICH WILL NOT INTERFERE WITH THE EXECUTION OF THE WORK, SUBJECT TO THE APPROVAL OF ENGINEERING.

7. THE AREAS OF THE CUSTOMER'S PROPERTY DISTURBED BY THE WORK AND NOT COVERED BY THE BUILDING, DRIVEWAY OR CRUSHED STONE, SHALL BE GRADED TO A UNIFORM SLOPE, FERTILIZED, SEEDED, AND COVERED WITH MULCH AS SPECIFIED IN THE SPECIFICATION LANDSCAPE WORK.

8. BEDDING MATERIAL FOR UTILITY LINES, CULVERTS AND PIPING: CLEAN SAND, MEDIUM TP COARSE, SUB ROUNDED NATURAL RIVER OR BANK SAND, WASHED, FREE OF SILT OR CLAY, LOAM, FRIABLE OR SOLUBLE MATERIALS, AND ORGANIC MATER; GRADED IN ACCORDANCE WITH THE FOLLOWING GRAIN SIZE DISTRIBUTION:

SIEVE SIZE	PERCENT PASSING
3/8"	100
NO. 4 MESH	60-90
NO. 8 MESH	0-45
NO. 16 MESH	0-25
NO. 100 MESH	0-2
NO. 200 MESH	0-2

9. BMP'S FOR TEMPORARY EROSION/SEDIMENTATION CONTROL SHALL BE IMPLEMENTED PER LOCAL, CITY OR COUNTY GUIDELINES AND PER PLAN IF APPLICABLE.

ABBREVIATIONS

AC	AIR CONDITIONER
AFF	ABOVE FINISHED FLOOR
AFG	ABOVE FINISHED GRADE
AFS	ABOVE FINISHED SLAB
ALUM	ALUMINUM
	ANCHOR BOLT
	ANGLE
ARCH	ARCHITECTURAL
BTS	BASE TRANSMISSION SYSTEM
BLDG	BUILDING
BM	BEAM
BOT	BOTTOM
B.O.	BOTTOM OF
BOC	BOTTOM OF CONCRETE
BOS	BOTTOM OF STEEL
	CONTROL JOINT
	CENTER LINE
CLG	CEILING
CLR	CLEAR
CMU	CONCRETE MASONRY UNIT
COL	COLUMN
CONC	CONCRETE
CONST	CONSTRUCTION
CONT	CONTINUOUS
CTR	CENTER
DIA / ∅	DIAMETER
DTL	DETAIL
	EXISTING
EA	EACH
	EXPANSION JOINT
ELEC	ELECTRIC/ELECTRICAL
	ELEVATION
EQ	EQUAL
EW	EACH WAY
EXP	EXPANSION
EXT	EXTERIOR
	FLOOR DRAIN
FIN	FINISH
FIN FLR	FINISH FLOOR
FLR	FLOOR
FTG	FOOTING
GA	GAUGE
GALV	GALVANIZED
GYP	GYPSUM
GB	GYPSUM BOARD
HM	HOLLOW METAL
HOR	HORIZONTAL
HR	HOUR
	HEIGHT
HVAC	HEATING VENTILATION AIR CONDITIONING
INSUL	INSULATION
INT	INTERIOR
JT	JOINT
LAM	LAMINATED
LF	LINEAL FOOT
MANUF	MANUFACTURER
MAX	MAXIMUM
MECH	MECHANICAL
MH	MANHOLE
MM	MILLIMETER
MIN	MINIMUM
MISC	MISCELLANEOUS
MPH	MILES PER HOUR
MTL	METAL
NIC	NOT IN CONTRACT
NOM	NOMINAL
NTS	NOT TO SCALE
OC	ON CENTER
OD	OUTSIDE DIAMETER
OH	OVERHEAD
OPNG	OPENING
OPP	OPPOSITE
(P)	PROPOSED
PCS	PERSONAL COMMUNICATION SYSTEM
PL	PLATE
PR	PAIR
PSI	POUNDS PER SQUARE INCH
PSF	POUNDS PER SQUARE FOOT
PT	PRESSURE TREATED
RAD	RADIUS
RD	ROOF DRAIN
REINF	REINFORCED/REINFORCING
REQ'D	REQUIRED
RM	ROOM
R/W	RIGHT OF WAY
SCHED	SCHEDULE
SECT	SECTION
SF	SQUARE FOOT
SIM	SIMILAR
SQ FT	SQUARE FOOT
SS	STAINLESS STEEL
STD	STANDARD
STL	STEEL
STRUC	STRUCTURAL
TEMP	TEMPORARY
THK	THICK
T.O.	TOP OF
TOS	TOP OF STEEL
TOC	TOP OF CONCRETE
TYP	TYPICAL
UNO	UNLESS NOTED OTHERWISE
VCT	VINYL COMPOSITION TILE
VERT	VERTICAL
W/	WITH
WWM	WELDED WIRE MESH

LEGENDS & SYMBOLS

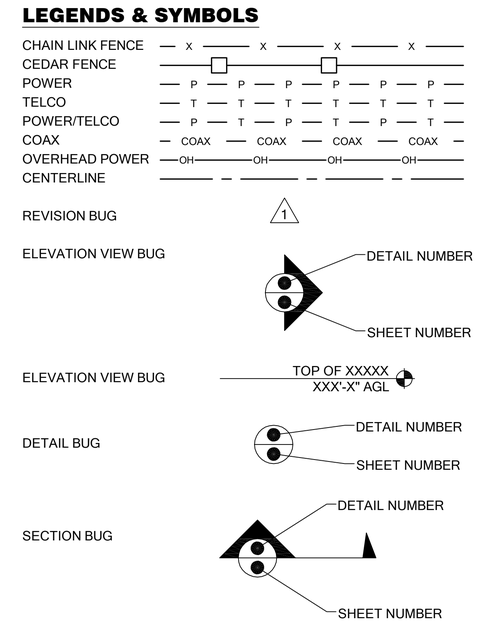

LANDLORD SIGNATURE: _____

T-Mobile

PROJECT INFORMATION:

GATEWOOD RELO
SE03813A

101 STEWART ST
SEATTLE, WA 98101

ISSUED FOR:

BUILDING PERMIT

REVISION HISTORY:

NO.	DATE:	DESCRIPTION:	CHK. BY:
10	6/29/2016	REV CALLOUTS PER EMAIL COMMENTS	BJT
9	6/22/2016	ADD GAMMA STYLE SHEET & UPDATE GAMMA CALLS	BJT
8	6/24/2016	ADD ROOF COVERAGE SHADOWBOX NOTE	BJT
7	6/13/2016	REVISED PER REDLINES	BJT
6	3/23/2016	ADD LATEST STRUCTURAL SHEETS TO DRAWING SET	BJT
5	3/2/2016	REV LOCATION OF SECTORS TO WITHIN NEW SCREEN	BJT
4	12/28/2015	REV PER STRUCTURAL	BJT
3	12/2/2015	REV PER REDLINES: ADDTIONAL REDLINES	BJT
2	12/1/2015	REV PER REDLINES	BJT
1	11/23/2015	ISSUED DESIGN REVIEW	BJT

PLANS PREPARED BY:

B. J. THOMAS, P.E.
7607 80TH AVE NE
MARYSVILLE, WA 98270
206-851-1106

DRAWN BY: AAL **CHK. BY:** BJ

LICENSURE:

B. J. THOMAS STATE OF WASHINGTON 37041 REGISTERED PROFESSIONAL ENGINEER

JURISDICTIONAL APPROVAL:

DRAWING TITLE:

GENERAL NOTES

DRAWING NUMBER:

G-1

SITE ADDRESS:

101 STEWART ST
SEATTLE, WA 98101

LEGAL DESCRIPTION:

LOT 8 AND THE NORTHWESTERLY 49 FEET OF LOT 9 IN BLOCK 27 OF ADDITION TO TOWN OF SEATTLE, AS LAID OUT BY A.A. DENNY (COMMONLY KNOWN AS A.A. DENNY'S 6TH ADDITION TO THE CITY OF SEATTLE), ACCORDING TO PLAT RECORDED IN VOLUME 1 OF PLATS, AT PAGE(S) 99, RECORDS OF KING COUNTY, WASHINGTON;
EXCEPT THE SOUTHWESTERLY 9 FEET THEREOF CONDEMNED FOR THE WIDENING OF FIRST AVENUE IN KING COUNTY SUPERIOR COURT CAUSE NO. 7092, AS PROVIDED BY ORDINANCE NO. 1129 OF THE CITY OF SEATTLE.

PARCEL NUMBER:

1977200020

ROOFTOP COVERAGE:

OVERALL ROOFTOP-	8416± SQFT
EXISTING ROOFTOP EQUIPMENT-	239± SQFT
PROPOSED T-MOBILE EQUIPMENT-	134± SQFT
TOTAL ROOFTOP COVERAGE=	4.4%

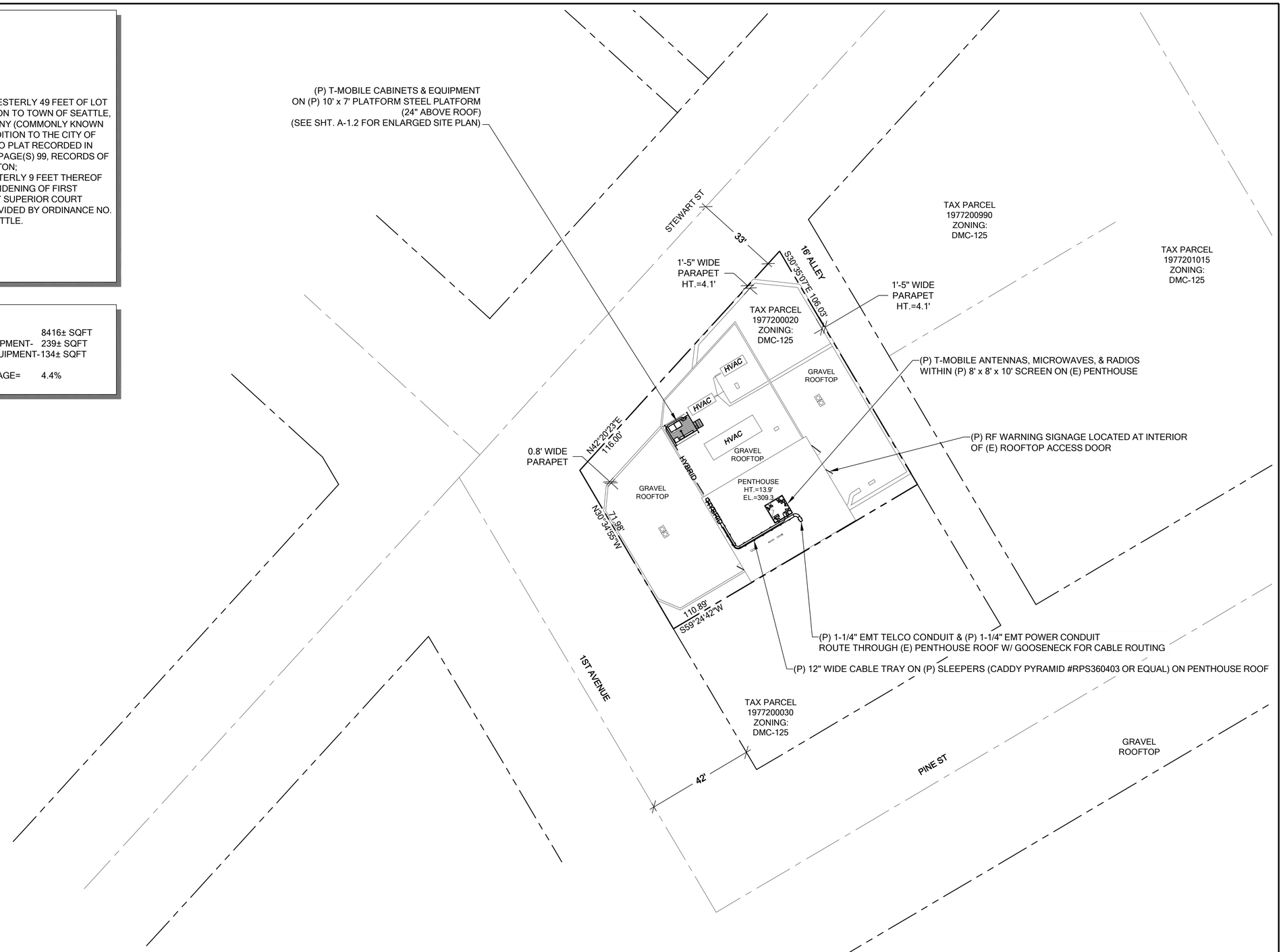

OVERALL PARCEL PLAN
22x34 SCALE: 1" = 60'
11x17 SCALE: 1" = 120'

60' 0 30' 60' 120'

LANDLORD SIGNATURE: _____

T-Mobile

PROJECT INFORMATION:

GATEWOOD RELO
SE03813A

101 STEWART ST
SEATTLE, WA 98101

ISSUED FOR:

BUILDING PERMIT

REVISION HISTORY:

NO.	DATE:	DESCRIPTION:	CHK. BY:
10	6/29/2016	REV CALLOUTS PER EMAIL COMMENTS	BJT
9	6/22/2016	ADD GAMMA STYLE SHEET & UPDATE GAMMA CALLS	BJT
8	6/24/2016	ADD ROOF COVERAGE SHADOWBOX NOTE	BJT
7	6/13/2016	REVISED PER REDLINES	BJT
6	3/23/2016	ADD LATEST STRUCTURAL SHEETS TO DRAWING SET	BJT
5	3/2/2016	REV LOCATION OF SECTORS TO WITHIN NEW SCREEN	BJT
4	12/28/2015	REV PER STRUCTURAL	BJT
3	12/2/2015	REV PER REDLINES; ADDTIONAL REDLINES	BJT
2	12/1/2015	REV PER REDLINES	BJT
1	11/23/2015	ISSUED DESIGN REVIEW	BJT

PLANS PREPARED BY:

B. J. THOMAS, P.E.
7607 80TH AVE NE
MARYSVILLE, WA 98270
206-851-1106

DRAWN BY:	CHK. BY:
AAL	BJ

LICENSURE:

B. J. THOMAS STATE OF WASHINGTON 37041 REGISTERED PROFESSIONAL ENGINEER

JURISDICTIONAL APPROVAL:

DRAWING TITLE:

OVERALL PARCEL PLAN

DRAWING NUMBER:

A-1

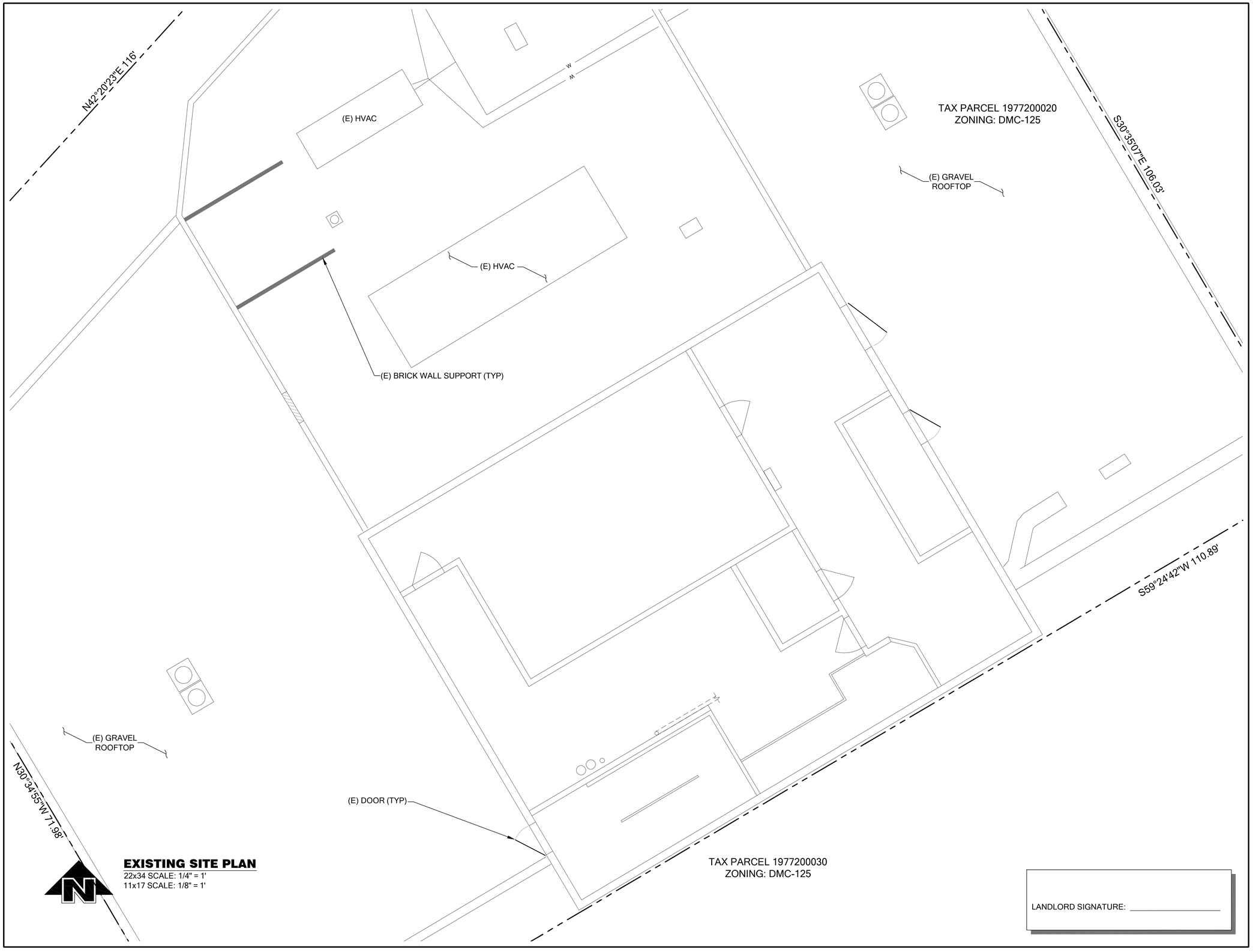

EXISTING SITE PLAN
22x34 SCALE: 1/4" = 1'
11x17 SCALE: 1/8" = 1'

LANDLORD SIGNATURE: _____

T-Mobile

PROJECT INFORMATION:

GATEWOOD RELO
SE03813A

101 STEWART ST
SEATTLE, WA 98101

ISSUED FOR:

BUILDING PERMIT

REVISION HISTORY:

NO.	DATE:	DESCRIPTION:	CHK. BY:
10	6/29/2016	REV CALLOUTS PER EMAIL COMMENTS	BJT
9	6/22/2016	ADD GAMMA STYLE SHEET & UPDATE GAMMA CALLS	BJT
8	6/24/2016	ADD ROOF COVERAGE SHADOWBOX NOTE	BJT
7	6/13/2016	REVISED PER REDLINES	BJT
6	3/23/2016	ADD LATEST STRUCTURAL SHEETS TO DRAWING SET	BJT
5	3/2/2016	REV LOCATION OF SECTORS TO WITHIN NEW SCREEN	BJT
4	12/28/2015	REV PER STRUCTURAL	BJT
3	12/2/2015	REV PER REDLINES; ADDTIONAL REDLINES	BJT
2	12/1/2015	REV PER REDLINES	BJT
1	11/23/2015	ISSUED DESIGN REVIEW	BJT

PLANS PREPARED BY:

B. J. THOMAS, P.E.
7607 80TH AVE NE
MARYSVILLE, WA 98270
206-851-1106

DRAWN BY:	CHK. BY:
AAL	BJ

LICENSURE:

B. J. THOMAS
STATE OF WASHINGTON
37041
REGISTERED
PROFESSIONAL ENGINEER

JURISDICTIONAL APPROVAL:

DRAWING TITLE:

EXISTING SITE PLAN

DRAWING NUMBER:

A-1.1

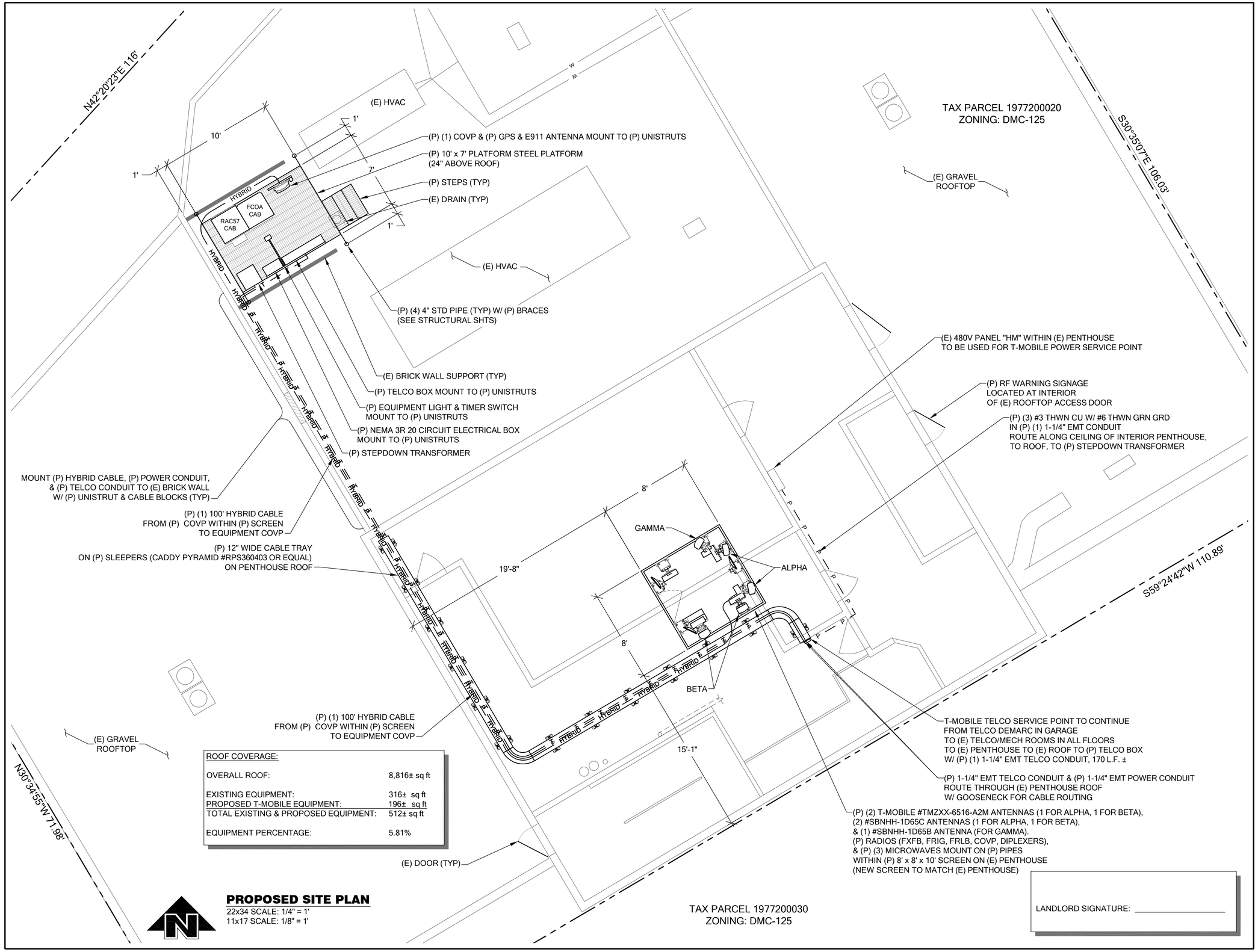

ROOF COVERAGE:	
OVERALL ROOF:	8,816± sq ft
EXISTING EQUIPMENT:	316± sq ft
PROPOSED T-MOBILE EQUIPMENT:	196± sq ft
TOTAL EXISTING & PROPOSED EQUIPMENT:	512± sq ft
EQUIPMENT PERCENTAGE:	5.81%

PROPOSED SITE PLAN

22x34 SCALE: 1/4" = 1'
11x17 SCALE: 1/8" = 1'

T-Mobile

PROJECT INFORMATION:

GATEWOOD RELO
SE03813A

101 STEWART ST
SEATTLE, WA 98101

ISSUED FOR:

BUILDING PERMIT

REVISION HISTORY:

NO.	DATE:	DESCRIPTION:	CHK. BY:
10	6/29/2016	REV CALLOUTS PER EMAIL COMMENTS	BJT
9	6/22/2016	ADD GAMMA STYLE SHEET & UPDATE GAMMA CALLS	BJT
8	6/24/2016	ADD ROOF COVERAGE SHADOWBOX NOTE	BJT
7	6/13/2016	REVISED PER REDLINES	BJT
6	3/23/2016	ADD LATEST STRUCTURAL SHEETS TO DRAWING SET	BJT
5	3/2/2016	REV LOCATION OF SECTORS TO WITHIN NEW SCREEN	BJT
4	12/28/2015	REV PER STRUCTURAL	BJT
3	12/2/2015	REV PER REDLINES; ADDTIONAL REDLINES	BJT
2	12/1/2015	REV PER REDLINES	BJT
1	11/23/2015	ISSUED DESIGN REVIEW	BJT

PLANS PREPARED BY:

B. J. THOMAS, P.E.
7607 80TH AVE NE
MARYSVILLE, WA 98270
206-851-1106

DRAWN BY:	CHK. BY:
AAL	BJ

LICENSURE:

B. J. THOMAS
STATE OF WASHINGTON
37041
REGISTERED
PROFESSIONAL ENGINEER

JURISDICTIONAL APPROVAL:

DRAWING TITLE:

PROPOSED SITE PLAN

DRAWING NUMBER:

A-1.2

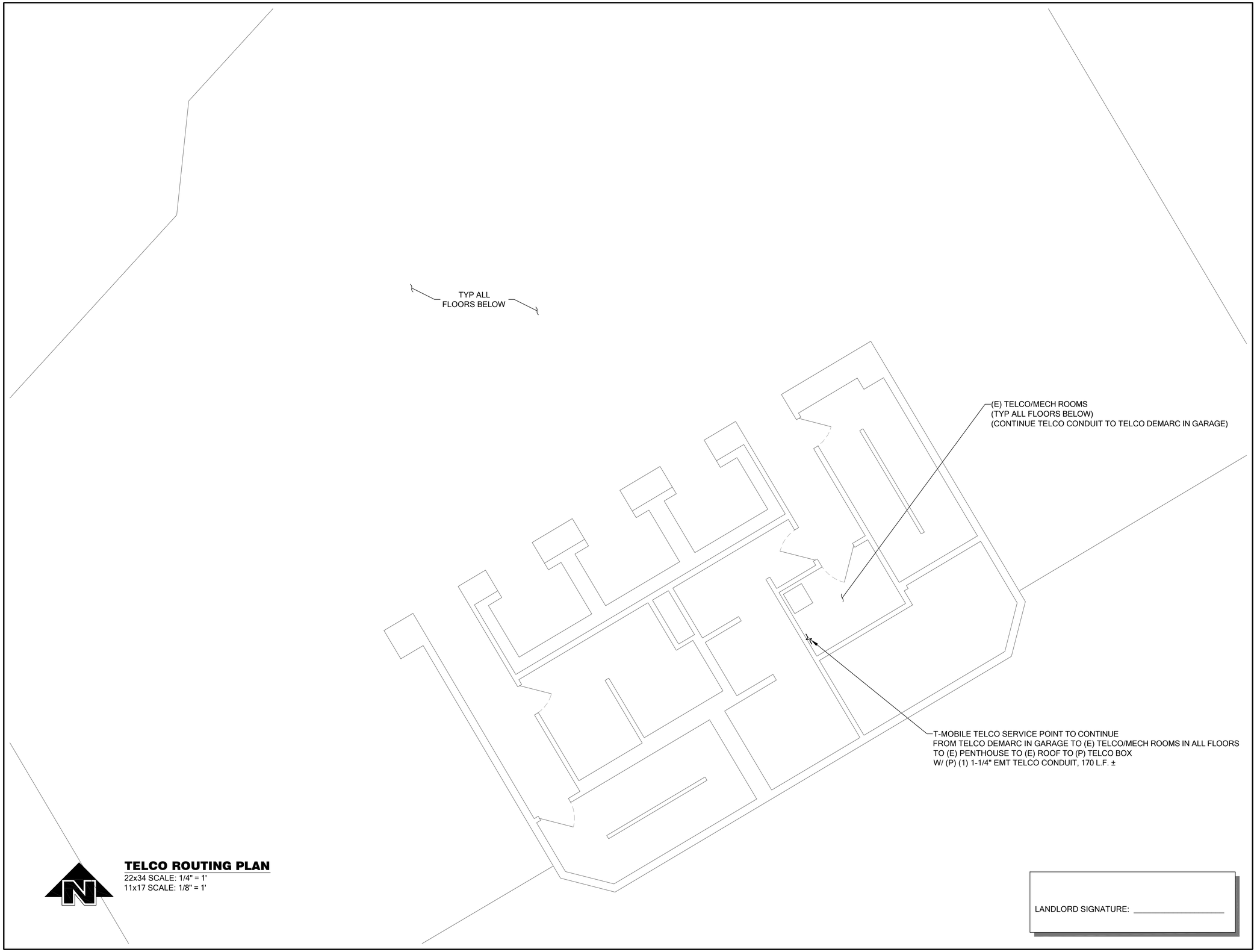

TELCO ROUTING PLAN
22x34 SCALE: 1/4" = 1'
11x17 SCALE: 1/8" = 1'

LANDLORD SIGNATURE: _____

T-Mobile

PROJECT INFORMATION:

GATEWOOD RELO
SE03813A

101 STEWART ST
SEATTLE, WA 98101

ISSUED FOR:

BUILDING PERMIT

REVISION HISTORY:

NO.	DATE:	DESCRIPTION:	CHK. BY:
10	6/29/2016	REV CALLOUTS PER EMAIL COMMENTS	BJT
9	6/22/2016	ADD GAMMA STYLE SHEET & UPDATE GAMMA CALLS	BJT
8	6/24/2016	ADD ROOF COVERAGE SHADOWBOX NOTE	BJT
7	6/13/2016	REVISED PER REDLINES	BJT
6	3/23/2016	ADD LATEST STRUCTURAL SHEETS TO DRAWING SET	BJT
5	3/2/2016	REV LOCATION OF SECTORS TO WITHIN NEW SCREEN	BJT
4	12/28/2015	REV PER STRUCTURAL	BJT
3	12/2/2015	REV PER REDLINES; ADDTIONAL REDLINES	BJT
2	12/1/2015	REV PER REDLINES	BJT
1	11/23/2015	ISSUED DESIGN REVIEW	BJT

PLANS PREPARED BY:

B. J. THOMAS, P.E.
7607 80TH AVE NE
MARYSVILLE, WA 98270
206-851-1106

DRAWN BY: AAL
CHK. BY: BJ

LICENSURE:

B. J. THOMAS
STATE OF WASHINGTON
37041
REGISTERED
PROFESSIONAL ENGINEER

JURISDICTIONAL APPROVAL:

DRAWING TITLE:

TELCO ROUTING PLAN

DRAWING NUMBER:

A-1.3

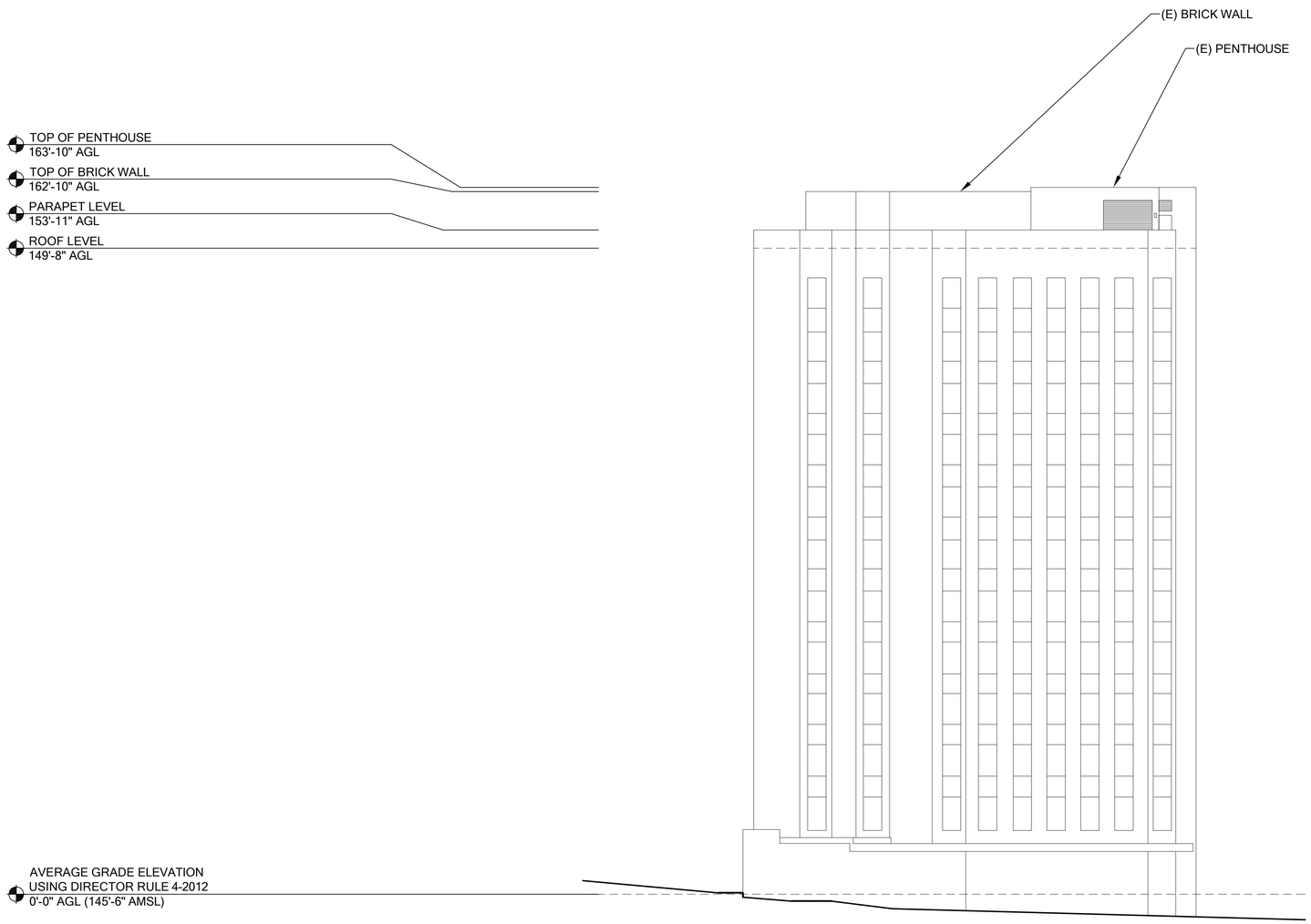

1 / A-2 **EXISTING WEST ELEVATION**
22x34 SCALE: 1/16" = 1'
11x17 SCALE: 1/32" = 1'

LANDLORD SIGNATURE: _____

T-Mobile

PROJECT INFORMATION:

GATEWOOD RELO
SE03813A

101 STEWART ST
SEATTLE, WA 98101

ISSUED FOR:

BUILDING PERMIT

REVISION HISTORY:

NO.	DATE:	DESCRIPTION:	CHK. BY:
10	6/29/2016	REV CALLOUTS PER EMAIL COMMENTS	BJT
9	6/22/2016	ADD GAMMA STYLE SHEET & UPDATE GAMMA CALLS	BJT
8	6/24/2016	ADD ROOF COVERAGE SHADOWBOX NOTE	BJT
7	6/13/2016	REVISED PER REDLINES	BJT
6	3/23/2016	ADD LATEST STRUCTURAL SHEETS TO DRAWING SET	BJT
5	3/2/2016	REV LOCATION OF SECTORS TO WITHIN NEW SCREEN	BJT
4	12/28/2015	REV PER STRUCTURAL	BJT
3	12/2/2015	REV PER REDLINES; ADDTIONAL REDLINES	BJT
2	12/1/2015	REV PER REDLINES	BJT
1	11/23/2015	ISSUED DESIGN REVIEW	BJT

PLANS PREPARED BY:

B. J. THOMAS, P.E.
7607 80TH AVE NE
MARYSVILLE, WA 98270
206-851-1106

DRAWN BY: AAL
CHK. BY: BJ

LICENSURE:

B. J. THOMAS
STATE OF WASHINGTON
37041
REGISTERED
PROFESSIONAL ENGINEER

JURISDICTIONAL APPROVAL:

DRAWING TITLE:

EXISTING WEST ELEVATION

DRAWING NUMBER:

A-2

PAINT NOTE:

PROPOSED SCREEN TO BE PAINTED TO MATCH EXISTING BRICK WALL OR EXISTING PENTHOUSE.

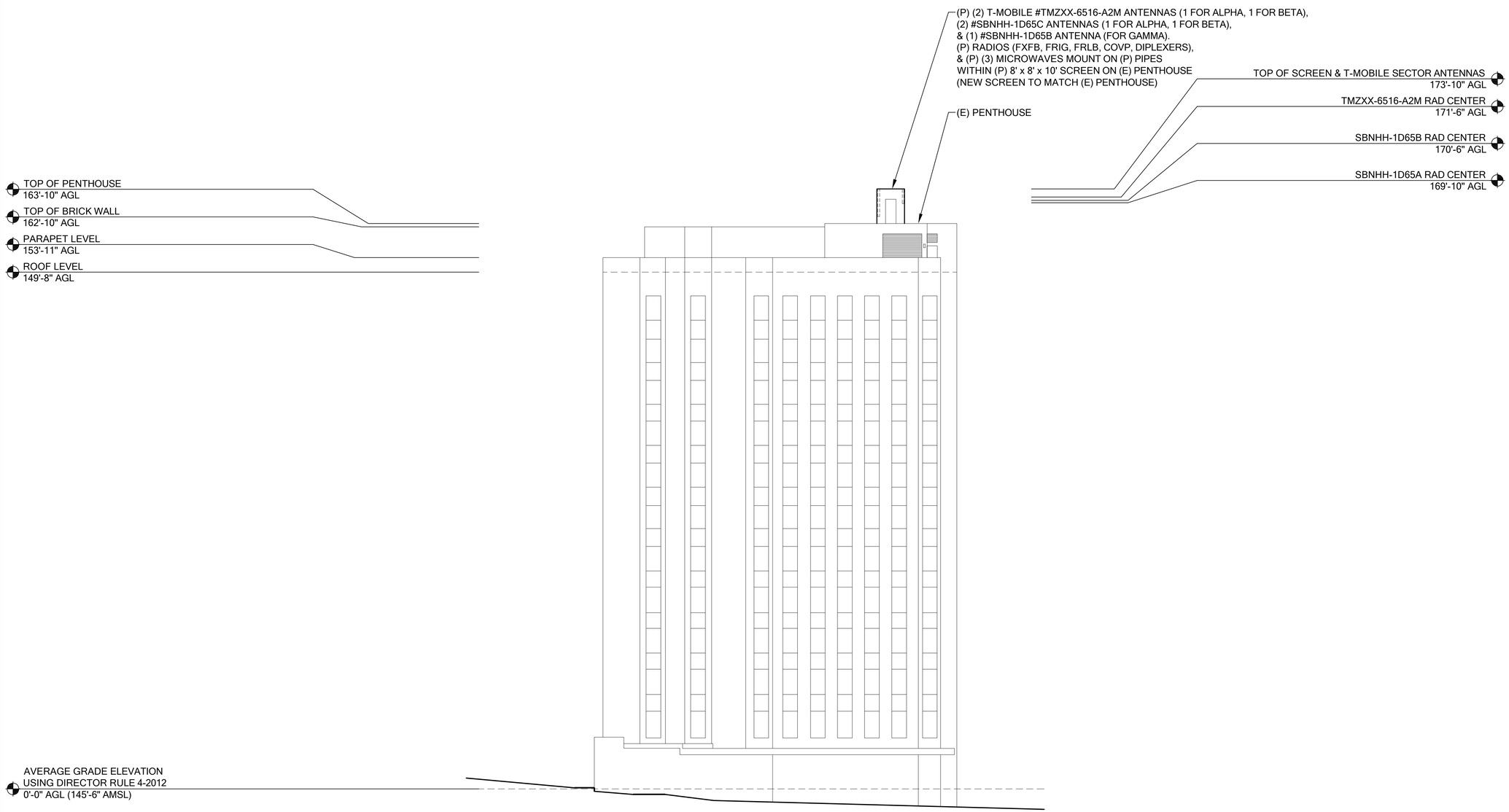

1 / A-2.1 **PROPOSED WEST ELEVATION**

22x34 SCALE: 1/16" = 1'
11x17 SCALE: 1/32" = 1'

LANDLORD SIGNATURE: _____

T-Mobile

PROJECT INFORMATION:

GATEWOOD RELO
SE03813A

101 STEWART ST
SEATTLE, WA 98101

ISSUED FOR:

BUILDING PERMIT

REVISION HISTORY:

NO.	DATE:	DESCRIPTION:	CHK. BY:
10	6/29/2016	REV CALLOUTS PER EMAIL COMMENTS	BJT
9	6/22/2016	ADD GAMMA STYLE SHEET & UPDATE GAMMA CALLS	BJT
8	6/24/2016	ADD ROOF COVERAGE SHADOWBOX NOTE	BJT
7	6/13/2016	REVISED PER REDLINES	BJT
6	3/23/2016	ADD LATEST STRUCTURAL SHEETS TO DRAWING SET	BJT
5	3/2/2016	REV LOCATION OF SECTORS TO WITHIN NEW SCREEN	BJT
4	12/28/2015	REV PER STRUCTURAL	BJT
3	12/2/2015	REV PER REDLINES; ADDTIONAL REDLINES	BJT
2	12/1/2015	REV PER REDLINES	BJT
1	11/23/2015	ISSUED DESIGN REVIEW	BJT

PLANS PREPARED BY:

B. J. THOMAS, P.E.
7607 80TH AVE NE
MARYSVILLE, WA 98270
206-851-1106

DRAWN BY: AAL

CHK. BY: BJ

LICENSURE:

B. J. THOMAS
STATE OF WASHINGTON
37041
REGISTERED
PROFESSIONAL ENGINEER

JURISDICTIONAL APPROVAL:

DRAWING TITLE:

PROPOSED WEST ELEVATION

DRAWING NUMBER:

A-2.1

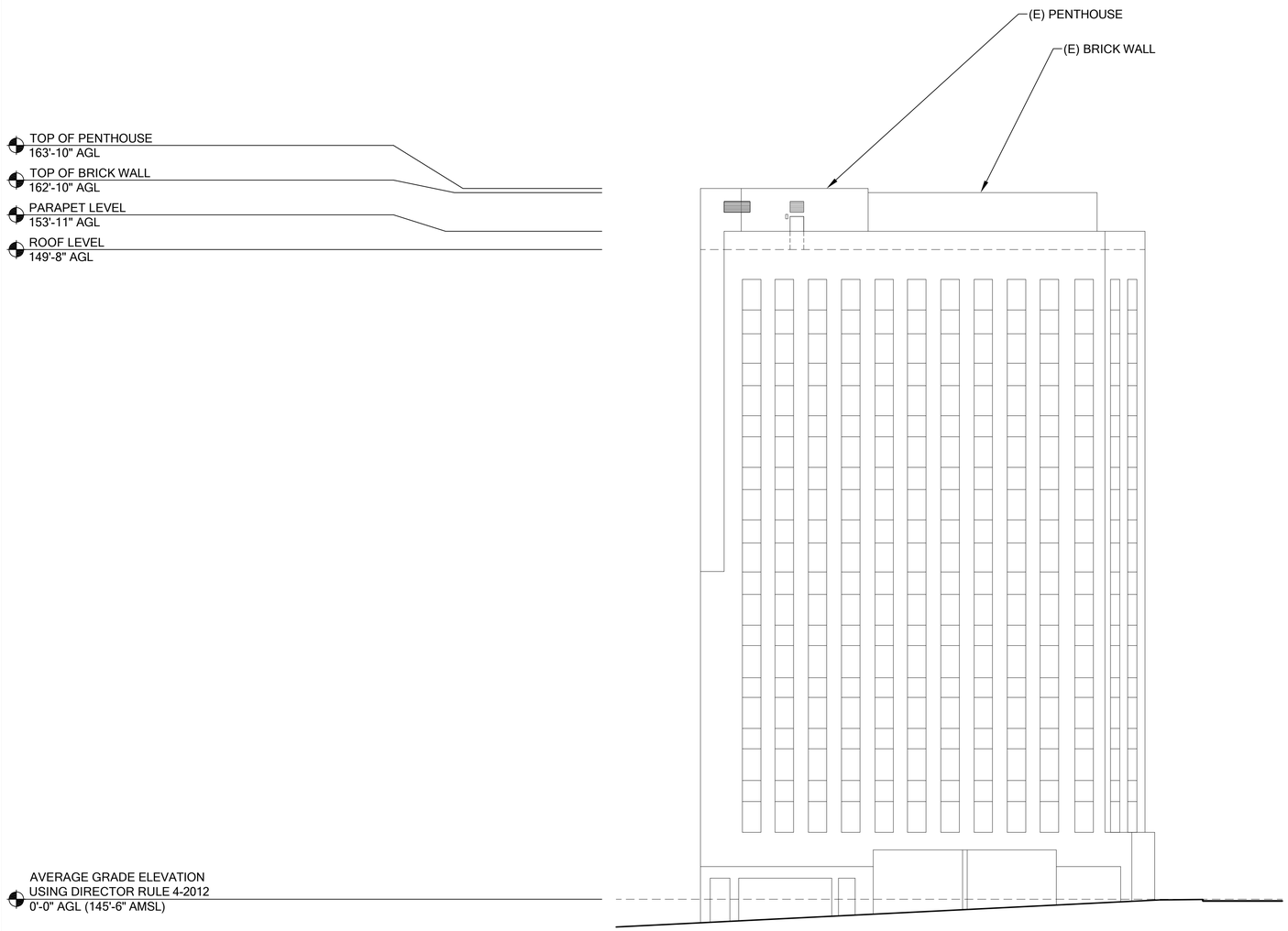

1 / A-2.2 **EXISTING EAST ELEVATION**
22x34 SCALE: 1/16" = 1'
11x17 SCALE: 1/32" = 1'

LANDLORD SIGNATURE: _____

T-Mobile

PROJECT INFORMATION:

GATEWOOD RELO
SE03813A

101 STEWART ST
SEATTLE, WA 98101

ISSUED FOR:

BUILDING PERMIT

REVISION HISTORY:

NO.	DATE:	DESCRIPTION:	CHK. BY:
10	6/29/2016	REV CALLOUTS PER EMAIL COMMENTS	BJT
9	6/22/2016	ADD GAMMA STYLE SHEET & UPDATE GAMMA CALLS	BJT
8	6/24/2016	ADD ROOF COVERAGE SHADOWBOX NOTE	BJT
7	6/13/2016	REVISED PER REDLINES	BJT
6	3/23/2016	ADD LATEST STRUCTURAL SHEETS TO DRAWING SET	BJT
5	3/2/2016	REV LOCATION OF SECTORS TO WITHIN NEW SCREEN	BJT
4	12/28/2015	REV PER STRUCTURAL	BJT
3	12/2/2015	REV PER REDLINES; ADDTIONAL REDLINES	BJT
2	12/1/2015	REV PER REDLINES	BJT
1	11/23/2015	ISSUED DESIGN REVIEW	BJT

PLANS PREPARED BY:

B. J. THOMAS, P.E.
7607 80TH AVE NE
MARYSVILLE, WA 98270
206-851-1106

DRAWN BY: AAL
CHK. BY: BJ

LICENSURE:

B. J. THOMAS
STATE OF WASHINGTON
37041
REGISTERED
PROFESSIONAL ENGINEER

JURISDICTIONAL APPROVAL:

DRAWING TITLE:

EXISTING EAST ELEVATION

DRAWING NUMBER:

A-2.2

PAINT NOTE:

PROPOSED ANTENNAS, RADIOS, AND ALL ATTACHMENTS/HARDWARE TO BE PAINTED TO MATCH EXISTING BRICK WALL OR EXISTING PENTHOUSE.

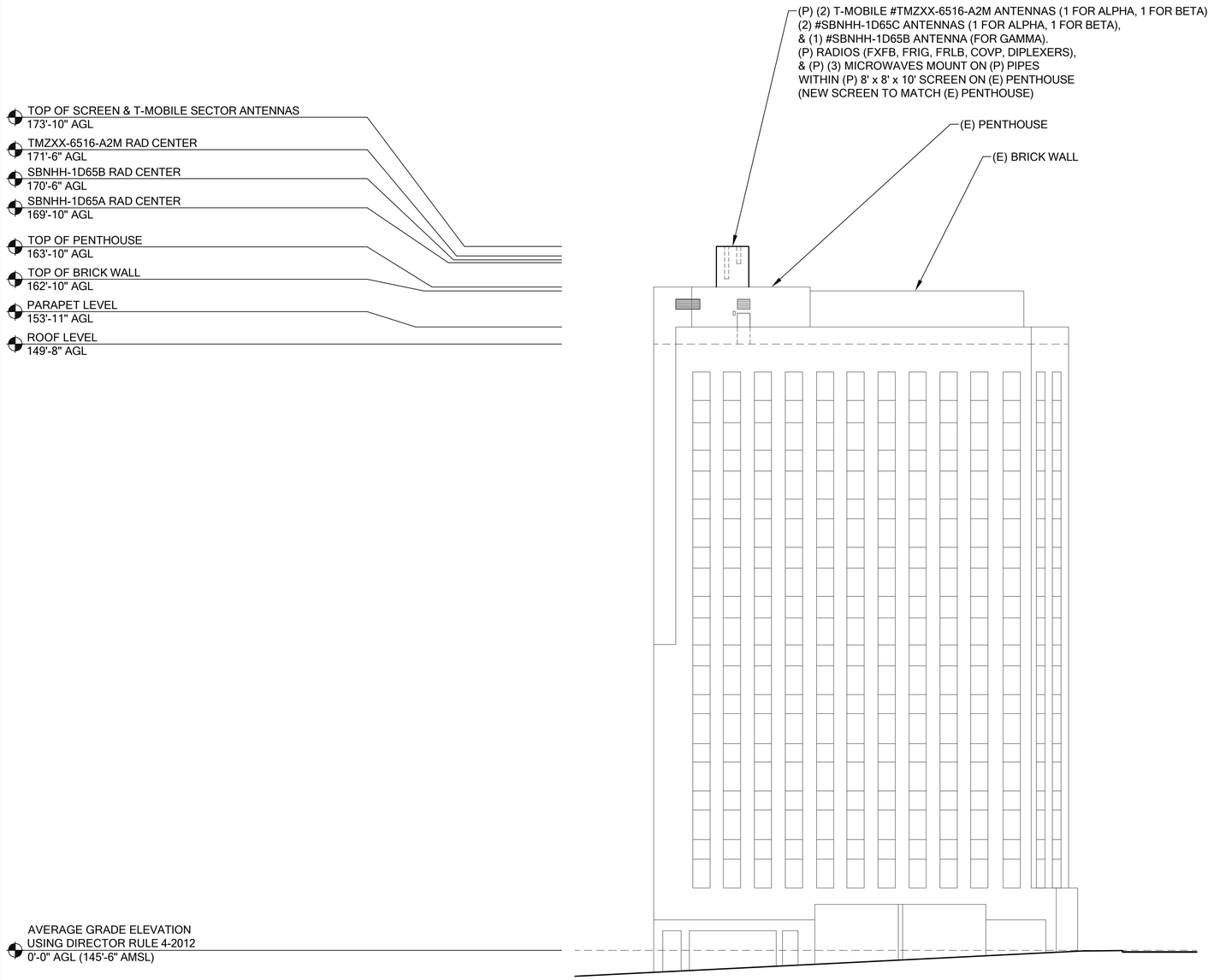

1 / A-2.3 **PROPOSED EAST ELEVATION**
22x34 SCALE: 1/16" = 1'
11x17 SCALE: 1/32" = 1'

LANDLORD SIGNATURE: _____

T-Mobile

PROJECT INFORMATION:

GATEWOOD RELO
SE03813A

101 STEWART ST
SEATTLE, WA 98101

ISSUED FOR:

BUILDING PERMIT

REVISION HISTORY:

NO.	DATE:	DESCRIPTION:	CHK. BY:
10	6/29/2016	REV CALLOUTS PER EMAIL COMMENTS	BJT
9	6/22/2016	ADD GAMMA STYLE SHEET & UPDATE GAMMA CALLS	BJT
8	6/24/2016	ADD ROOF COVERAGE SHADOWBOX NOTE	BJT
7	6/13/2016	REVISED PER REDLINES	BJT
6	3/23/2016	ADD LATEST STRUCTURAL SHEETS TO DRAWING SET	BJT
5	3/2/2016	REV LOCATION OF SECTORS TO WITHIN NEW SCREEN	BJT
4	12/28/2015	REV PER STRUCTURAL	BJT
3	12/2/2015	REV PER REDLINES; ADDTIONAL REDLINES	BJT
2	12/1/2015	REV PER REDLINES	BJT
1	11/23/2015	ISSUED DESIGN REVIEW	BJT

PLANS PREPARED BY:

B. J. THOMAS, P.E.
7607 80TH AVE NE
MARYSVILLE, WA 98270
206-851-1106

DRAWN BY: AAL
CHK. BY: BJ

LICENSURE:

B. J. THOMAS
STATE OF WASHINGTON
37041
REGISTERED
PROFESSIONAL ENGINEER

JURISDICTIONAL APPROVAL:

DRAWING TITLE:

PROPOSED EAST ELEVATION

DRAWING NUMBER:

A-2.3

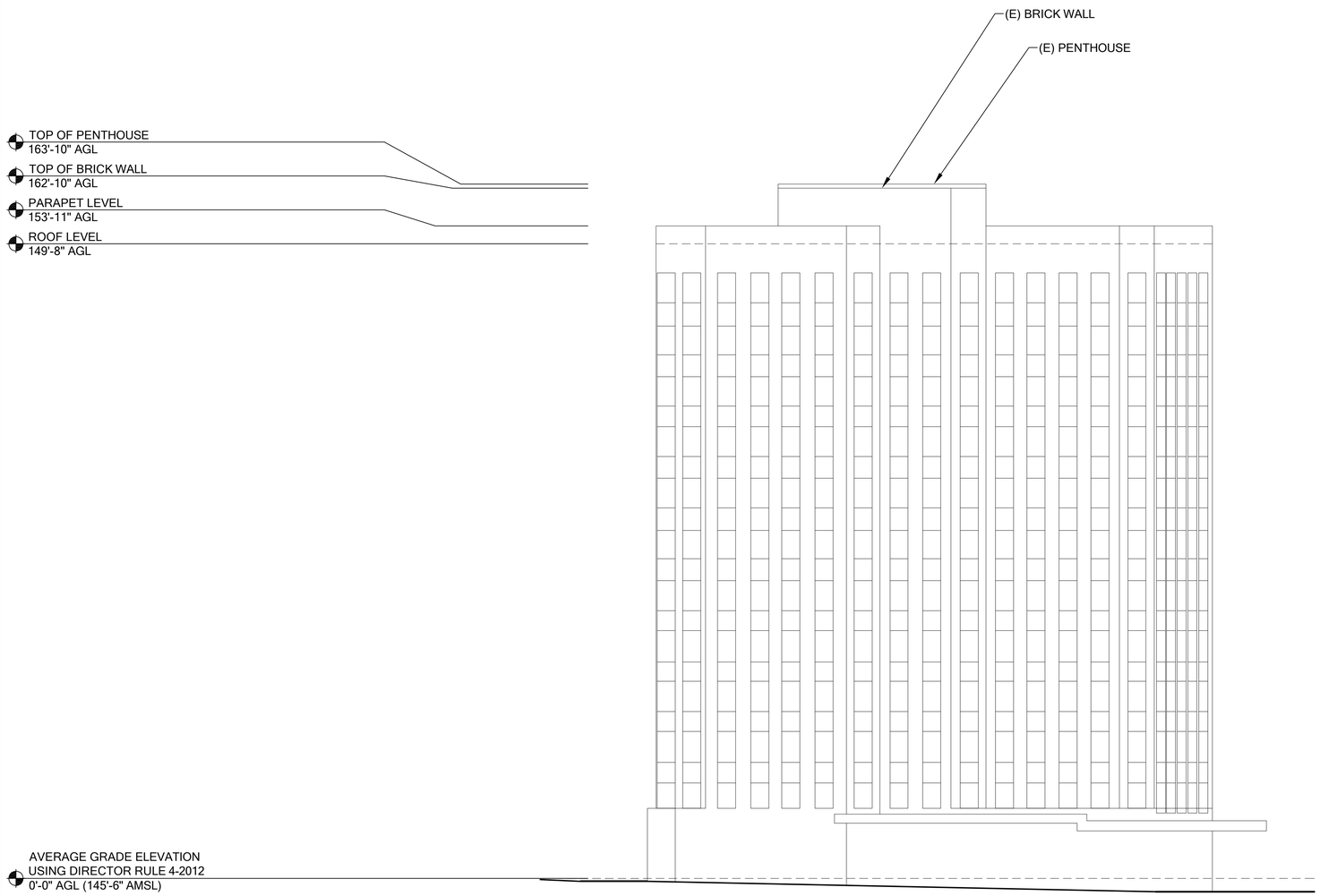

1 / A-2.4 **EXISTING NORTH ELEVATION**
22x34 SCALE: 1/16" = 1'
11x17 SCALE: 1/32" = 1'

LANDLORD SIGNATURE: _____

T-Mobile

PROJECT INFORMATION:

GATEWOOD RELO
SE03813A

101 STEWART ST
SEATTLE, WA 98101

ISSUED FOR:

BUILDING PERMIT

REVISION HISTORY:

NO.	DATE:	DESCRIPTION:	CHK. BY:
10	6/29/2016	REV CALLOUTS PER EMAIL COMMENTS	BJT
9	6/22/2016	ADD GAMMA STYLE SHEET & UPDATE GAMMA CALLS	BJT
8	6/24/2016	ADD ROOF COVERAGE SHADOWBOX NOTE	BJT
7	6/13/2016	REVISED PER REDLINES	BJT
6	3/23/2016	ADD LATEST STRUCTURAL SHEETS TO DRAWING SET	BJT
5	3/2/2016	REV LOCATION OF SECTORS TO WITHIN NEW SCREEN	BJT
4	12/28/2015	REV PER STRUCTURAL	BJT
3	12/2/2015	REV PER REDLINES; ADDTIONAL REDLINES	BJT
2	12/1/2015	REV PER REDLINES	BJT
1	11/23/2015	ISSUED DESIGN REVIEW	BJT

PLANS PREPARED BY:

B. J. THOMAS, P.E.
7607 80TH AVE NE
MARYSVILLE, WA 98270
206-851-1106

DRAWN BY: AAL
CHK. BY: BJ

LICENSURE:

B. J. THOMAS
STATE OF WASHINGTON
37041
REGISTERED
PROFESSIONAL ENGINEER

JURISDICTIONAL APPROVAL:

DRAWING TITLE:

EXISTING NORTH ELEVATION

DRAWING NUMBER:

A-2.4

PAINT NOTE:

PROPOSED ANTENNAS, RADIOS, AND ALL ATTACHMENTS/HARDWARE TO BE PAINTED TO MATCH EXISTING BRICK WALL OR EXISTING PENTHOUSE.

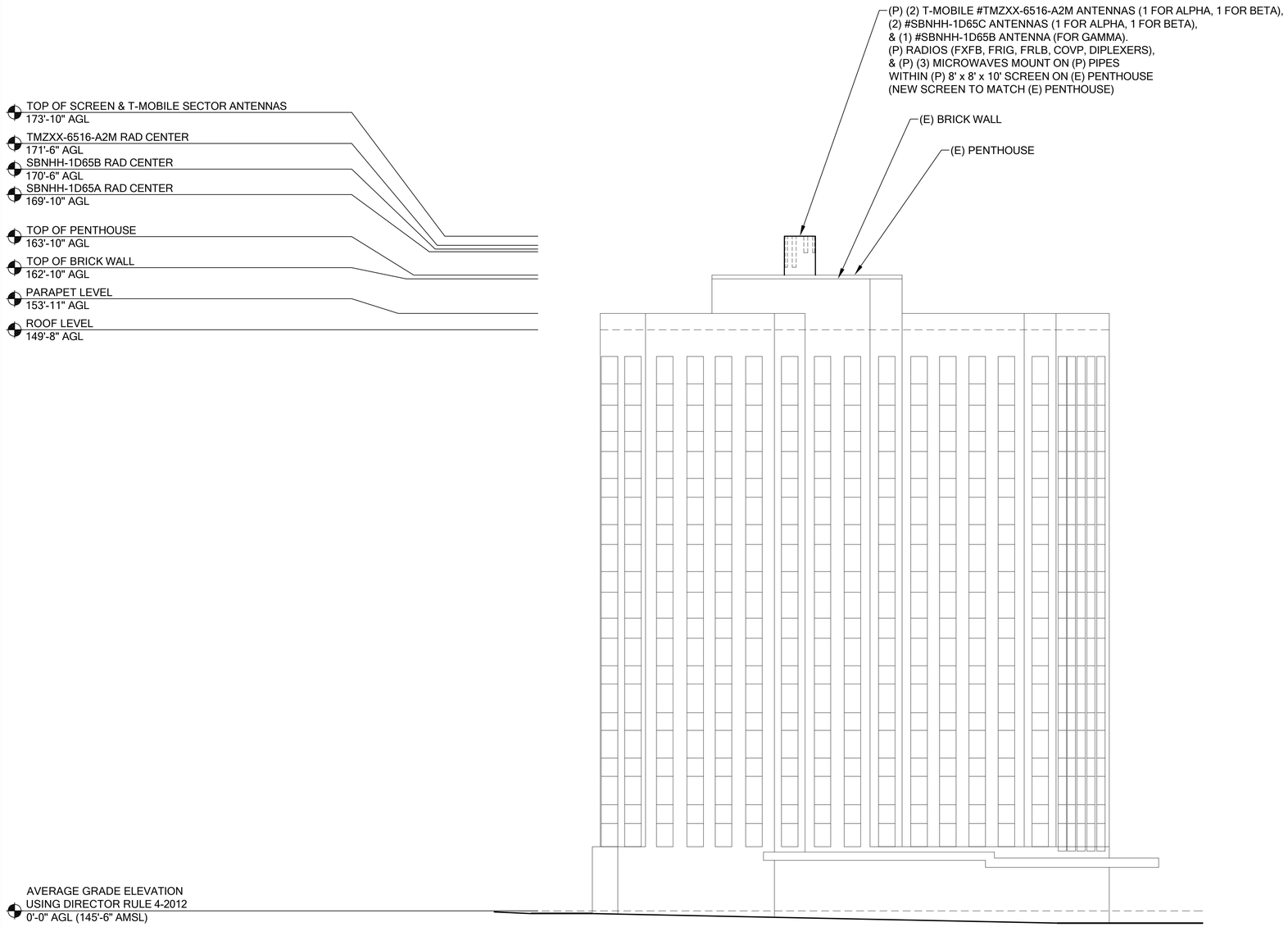

1 / A-2.5 **PROPOSED NORTH ELEVATION**
22x34 SCALE: 1/16" = 1'
11x17 SCALE: 1/32" = 1'

LANDLORD SIGNATURE: _____

T-Mobile

PROJECT INFORMATION:

GATEWOOD RELO
SE03813A

101 STEWART ST
SEATTLE, WA 98101

ISSUED FOR:

BUILDING PERMIT

REVISION HISTORY:

NO.	DATE:	DESCRIPTION:	CHK. BY:
10	6/29/2016	REV CALLOUTS PER EMAIL COMMENTS	BJT
9	6/22/2016	ADD GAMMA STYLE SHEET & UPDATE GAMMA CALLS	BJT
8	6/24/2016	ADD ROOF COVERAGE SHADOWBOX NOTE	BJT
7	6/13/2016	REVISED PER REDLINES	BJT
6	3/23/2016	ADD LATEST STRUCTURAL SHEETS TO DRAWING SET	BJT
5	3/2/2016	REV LOCATION OF SECTORS TO WITHIN NEW SCREEN	BJT
4	12/28/2015	REV PER STRUCTURAL	BJT
3	12/2/2015	REV PER REDLINES; ADDTIONAL REDLINES	BJT
2	12/1/2015	REV PER REDLINES	BJT
1	11/23/2015	ISSUED DESIGN REVIEW	BJT

PLANS PREPARED BY:

B. J. THOMAS, P.E.
7607 80TH AVE NE
MARYSVILLE, WA 98270
206-851-1106

DRAWN BY: AAL
CHK. BY: BJ

LICENSURE:

B. J. THOMAS
STATE OF WASHINGTON
37041
REGISTERED
PROFESSIONAL ENGINEER

JURISDICTIONAL APPROVAL:

DRAWING TITLE:

PROPOSED NORTH ELEVATION

DRAWING NUMBER:

A-2.5

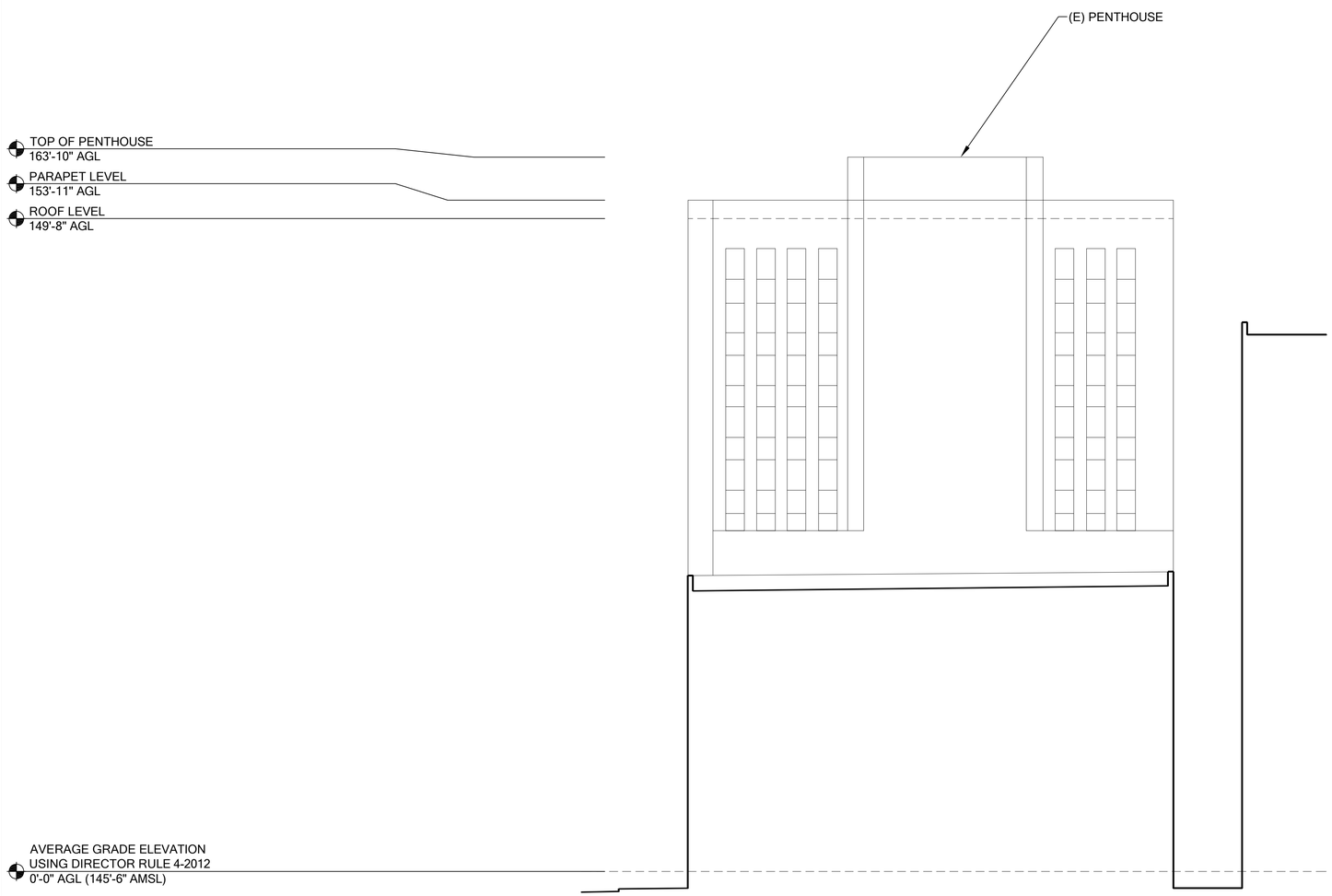

1 / A-2.6 **EXISTING SOUTH ELEVATION**
22x34 SCALE: 1/16" = 1'
11x17 SCALE: 1/32" = 1'

LANDLORD SIGNATURE: _____

T-Mobile

PROJECT INFORMATION:

GATEWOOD RELO
SE03813A

101 STEWART ST
SEATTLE, WA 98101

ISSUED FOR:

BUILDING PERMIT

REVISION HISTORY:

NO.	DATE:	DESCRIPTION:	CHK. BY:
10	6/29/2016	REV CALLOUTS PER EMAIL COMMENTS	BJT
9	6/22/2016	ADD GAMMA STYLE SHEET & UPDATE GAMMA CALLS	BJT
8	6/24/2016	ADD ROOF COVERAGE SHADOWBOX NOTE	BJT
7	6/13/2016	REVISED PER REDLINES	BJT
6	3/23/2016	ADD LATEST STRUCTURAL SHEETS TO DRAWING SET	BJT
5	3/2/2016	REV LOCATION OF SECTORS TO WITHIN NEW SCREEN	BJT
4	12/28/2015	REV PER STRUCTURAL	BJT
3	12/2/2015	REV PER REDLINES; ADDTIONAL REDLINES	BJT
2	12/1/2015	REV PER REDLINES	BJT
1	11/23/2015	ISSUED DESIGN REVIEW	BJT

PLANS PREPARED BY:

B. J. THOMAS, P.E.
7607 80TH AVE NE
MARYSVILLE, WA 98270
206-851-1106

DRAWN BY: AAL
CHK. BY: BJ

LICENSURE:

B. J. THOMAS
STATE OF WASHINGTON
37041
REGISTERED
PROFESSIONAL ENGINEER

JURISDICTIONAL APPROVAL:

DRAWING TITLE:

EXISTING SOUTH ELEVATION

DRAWING NUMBER:

A-2.6

PAINT NOTE:

PROPOSED ANTENNAS, RADIOS, AND ALL ATTACHMENTS/HARDWARE TO BE PAINTED TO MATCH EXISTING BRICK WALL OR EXISTING PENTHOUSE.

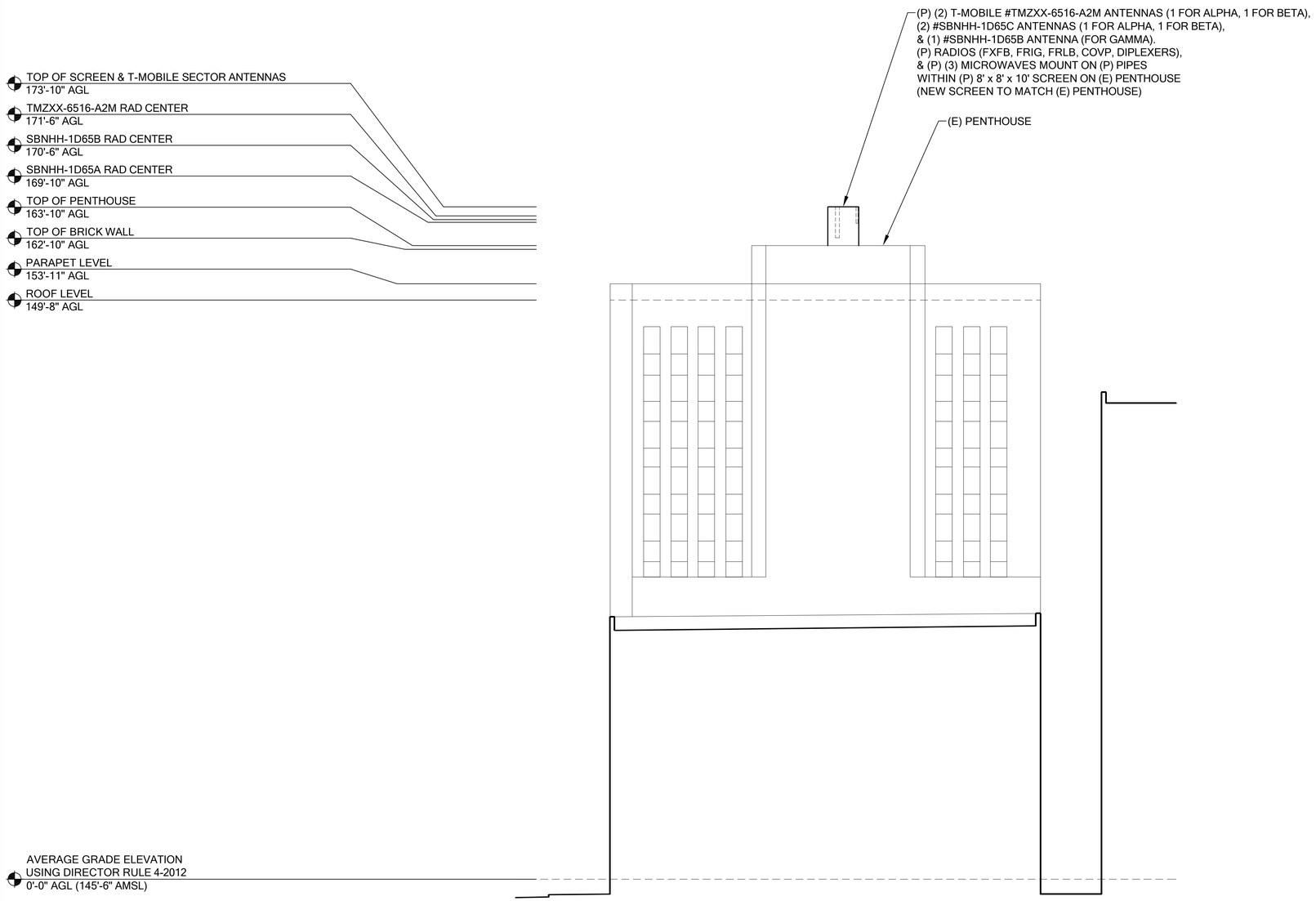

1 A-2.7 **PROPOSED SOUTH ELEVATION**

22x34 SCALE: 1/16" = 1'
11x17 SCALE: 1/32" = 1'

LANDLORD SIGNATURE: _____

T-Mobile

PROJECT INFORMATION:

GATEWOOD RELO
SE03813A

101 STEWART ST
SEATTLE, WA 98101

ISSUED FOR:

BUILDING PERMIT

REVISION HISTORY:

NO.	DATE:	DESCRIPTION:	CHK. BY:
10	6/29/2016	REV CALLOUTS PER EMAIL COMMENTS	BJT
9	6/22/2016	ADD GAMMA STYLE SHEET & UPDATE GAMMA CALLS	BJT
8	6/24/2016	ADD ROOF COVERAGE SHADOWBOX NOTE	BJT
7	6/13/2016	REVISED PER REDLINES	BJT
6	3/23/2016	ADD LATEST STRUCTURAL SHEETS TO DRAWING SET	BJT
5	3/2/2016	REV LOCATION OF SECTORS TO WITHIN NEW SCREEN	BJT
4	12/28/2015	REV PER STRUCTURAL	BJT
3	12/2/2015	REV PER REDLINES; ADDTIONAL REDLINES	BJT
2	12/1/2015	REV PER REDLINES	BJT
1	11/23/2015	ISSUED DESIGN REVIEW	BJT

PLANS PREPARED BY:

B. J. THOMAS, P.E.
7607 80TH AVE NE
MARYSVILLE, WA 98270
206-851-1106

DRAWN BY: AAL
CHK. BY: BJ

LICENSURE:

JURISDICTIONAL APPROVAL:

DRAWING TITLE:

PROPOSED SOUTH ELEVATION

DRAWING NUMBER:

A-2.7

BATTERY INFORMATION:

MAXIMUM OF (3) STRINGS OF (4) NORTHSTAR VLRA BATTERIES #NSB-170-FT IN PURCELL RAC57
TOTAL ELECTROLYTE = (12) BATTERIES x 0.9 GAL PER BATTERY = 10.8 GAL

AC SERVICE:

200 AMP 120/240 VOLTS AC 1Φ

PURCELL RAC57 DIMENSIONS
MANUFACTURER: PURCELL
HEIGHT: 57.75" DEPTH: 31.3" WIDTH: 30"
MAXIMUM WEIGHT: TBD
OPTIONAL: AIR CONDITIONER, AC POWER COMPARTMENT, AND REAR PANEL.

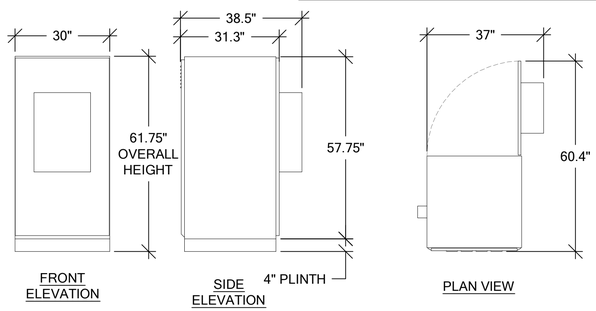

1 / A-3 **PURCELL RAC57 DETAILS**
SCALE: NTS

FCOA DIMENSIONS
MANUFACTURER: NOKIA SIEMENS
HEIGHT: 60"
DEPTH: 30"
WIDTH: 30"
MAXIMUM CABINET WEIGHT (WITH MODULES) 300± LBS

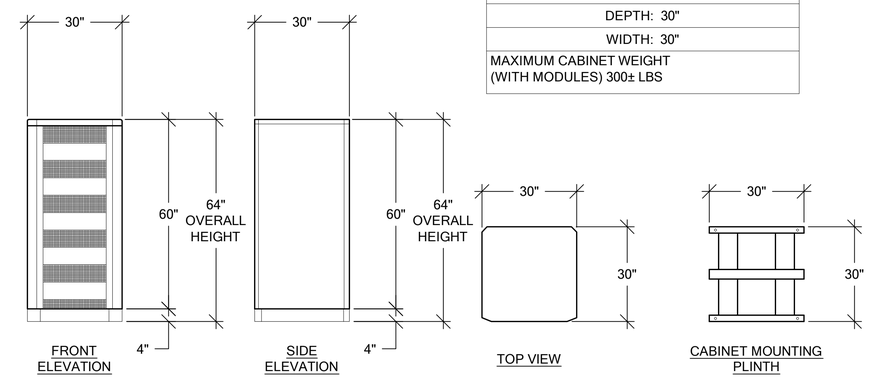

1 / A-3 **NOKIA SIEMENS FLEXI FCOA DETAILS**
SCALE: NTS

LANDLORD SIGNATURE: _____

T-Mobile

PROJECT INFORMATION:

GATEWOOD RELO
SE03813A

101 STEWART ST
SEATTLE, WA 98101

ISSUED FOR:

BUILDING PERMIT

REVISION HISTORY:

NO.	DATE:	DESCRIPTION:	CHK. BY:
10	6/29/2016	REV CALLOUTS PER EMAIL COMMENTS	BJT
9	6/22/2016	ADD GAMMA STYLE SHEET & UPDATE GAMMA CALLS	BJT
8	6/24/2016	ADD ROOF COVERAGE SHADOWBOX NOTE	BJT
7	6/13/2016	REVISED PER REDLINES	BJT
6	3/23/2016	ADD LATEST STRUCTURAL SHEETS TO DRAWING SET	BJT
5	3/2/2016	REV LOCATION OF SECTORS TO WITHIN NEW SCREEN	BJT
4	12/28/2015	REV PER STRUCTURAL	BJT
3	12/2/2015	REV PER REDLINES; ADDTIONAL REDLINES	BJT
2	12/1/2015	REV PER REDLINES	BJT
1	11/23/2015	ISSUED DESIGN REVIEW	BJT

PLANS PREPARED BY:

B. J. THOMAS, P.E.
7607 80TH AVE NE
MARYSVILLE, WA 98270
206-851-1106

DRAWN BY: AAL
CHK. BY: BJ

LICENSURE:

B. J. THOMAS
STATE OF WASHINGTON
37041
REGISTERED
PROFESSIONAL ENGINEER

JURISDICTIONAL APPROVAL:

DRAWING TITLE:

BTS EQUIPMENT DETAILS

DRAWING NUMBER:

A-3

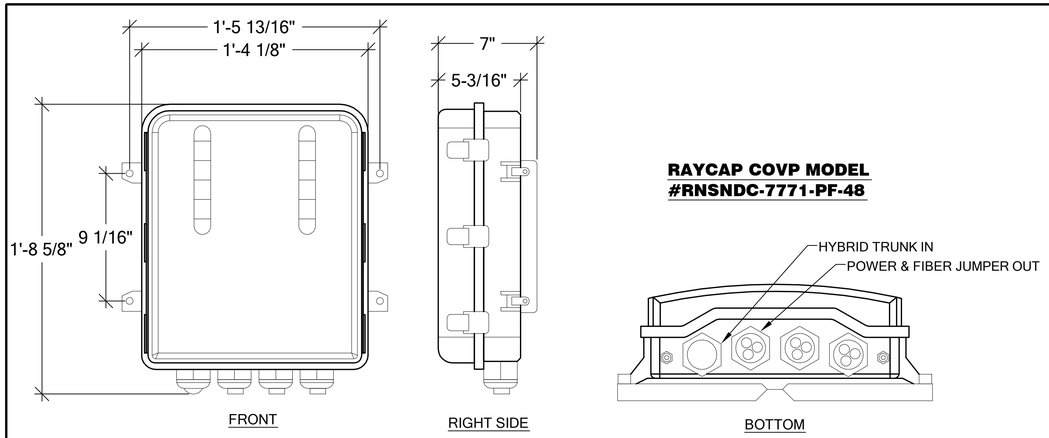

RAYCAP COVP MODEL #RNSNDC-7771-PF-48

1 / A-4 **RAYCAP COVP DETAIL**
SCALE: NTS

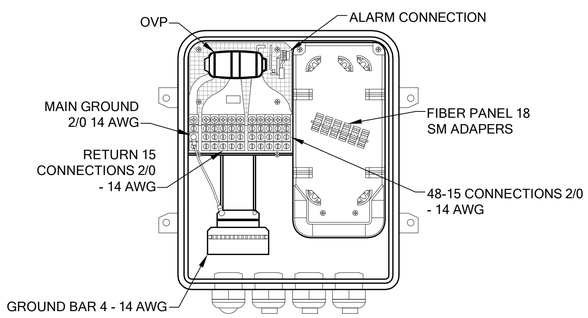

3 / A-4 **COVP INTERIOR DETAIL**
SCALE: NTS

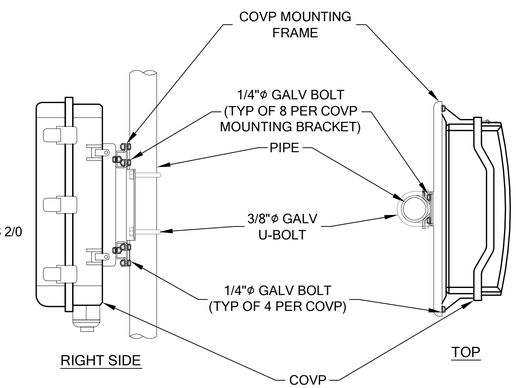

4 / A-4 **COVP MOUNTING DETAIL**
SCALE: NTS

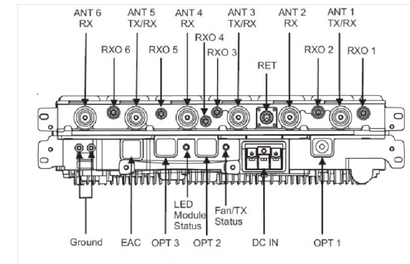

2 / A-4 **FXFC DETAIL**
SCALE: NTS

NOKIA FXFC

PROPERTY	VALUE
HEIGHT	133mm/3U (5.2 in)
WIDTH WIDTH (WITH COVERS)	447 mm (17.6 in) 492 mm (19.4 in)
DEPTH (FOR RACK ASSEMBLIES) DEPTH (WITH COVERS)	422 mm (16.6 in) 560 mm (22.1 in)
WEIGHT (INCLUDING THE CORE, FANS AND CASING)	MAX. 25 kg (55.1 lb)

NSN RADIO MODULE FOR LTE 700

PROPERTY	VALUE
HEIGHT	15.75"
WIDTH	15.75"
DEPTH	5.9 INCHES
WEIGHT	59.52 LBS

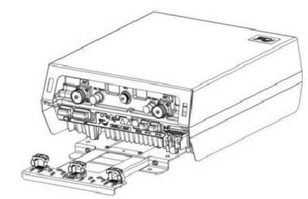

5 / A-4 **FRLB DETAIL**
SCALE: NTS

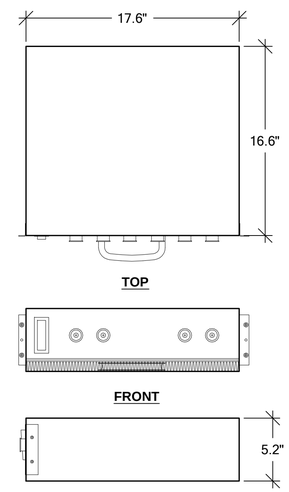

MODULE	WIDTH	HEIGHT	DEPTH	WEIGHT
SYSTEM FCM	17.6"	5.2"	22.1" (WITH COVER) 16.6" (WITHOUT COVER)	46.3 LBS
RADIO FRxx	17.6"	5.2"	22.1" (WITH COVER) 16.6" (WITHOUT COVER)	46.3 LBS
AC POWER FPMA *FPAA *FPBA	17.6" 2.8" 2.8"	5.2" 3.9" 3.9"	22.1" (WITH COVER) 16.6" (WITHOUT COVER) 15" 15"	24.3" 7.0" 8.4"
SITE SUPPORT FCSA *LTE *MIBBU (WPU) *WMP	26.3" 17.6" 17.6" 4.3"	14.4" 7" 5.2" 1.3"	20.6" 17.1" - -	44.1 LBS - 44.1 LBS 6.2 LBS

8 / A-4 **FRIA DETAIL**
SCALE: NTS

HYBRID CABLE		
SECTOR	# OF CABLES	LENGTH
ALL SECTORS	1	100'

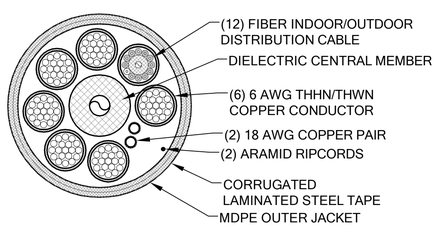

6 / A-4 **HYBRID CABLE DETAIL**
SCALE: NTS

DIMENSIONS (WxHxD) W/ SOLAR COVER & MOUNTING	17.2" x 23.8" x 7.5"
FRIG UNIT WEIGHT	24.0 kg / 25.9 lbs
SOLAR SHIELD WEIGHT	1.2 kg / 2.6 lbs
MOUNTING BRACKET WEIGHT	0.7 kg / 1.5 lbs
TOTAL WEIGHT	25.9 kg / 57 lbs

NOTE:
FRIG TO BE MOUNTED VERTICALLY ONLY.

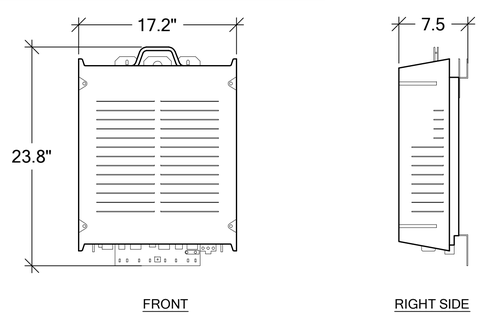

7 / A-4 **FRIG DETAIL**
SCALE: NTS

LANDLORD SIGNATURE: _____

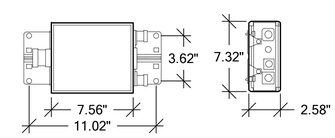

COMMSCOPE CROSSBAND DIPLEXER				
MECHANICAL SPECIFICATIONS:				
PART #	LENGTH	WIDTH	DEPTH	WEIGHT
ECC1920-VPUB	7.6" (192mm)	7.3" (186mm)	2.6" (65.5mm)	3.6 kg (7.9 lb)
CONNECTORS	MOUNTING CONNECTOR	PART NAME		
TYPE "RF"	7-16 DIN FEMALE	CROSSBAND COUPLER, PCS/AWS, AISG COMPATIBLE		
ELECTRICAL SPECIFICATIONS:				
FREQUENCY	FREQUENCY	GAIN		POWER HANDLING
AWS-1710-1755 MHz	PCS-1850-1990 MHz	12 DB		7-30 Vdc

T-Mobile

PROJECT INFORMATION:

GATEWOOD RELO
SE03813A

101 STEWART ST
SEATTLE, WA 98101

ISSUED FOR:

BUILDING PERMIT

REVISION HISTORY:

NO.	DATE:	DESCRIPTION:	CHK. BY:
10	6/29/2016	REV CALLOUTS PER EMAIL COMMENTS	BJT
9	6/22/2016	ADD GAMMA STYLE SHEET & UPDATE GAMMA CALLS	BJT
8	6/24/2016	ADD ROOF COVERAGE SHADOWBOX NOTE	BJT
7	6/13/2016	REVISED PER REDLINES	BJT
6	3/23/2016	ADD LATEST STRUCTURAL SHEETS TO DRAWING SET	BJT
5	3/2/2016	REV LOCATION OF SECTORS TO WITHIN NEW SCREEN	BJT
4	12/28/2015	REV PER STRUCTURAL	BJT
3	12/2/2015	REV PER REDLINES; ADDTIONAL REDLINES	BJT
2	12/1/2015	REV PER REDLINES	BJT
1	11/23/2015	ISSUED DESIGN REVIEW	BJT

PLANS PREPARED BY:

B. J. THOMAS, P.E.
7607 80TH AVE NE
MARYSVILLE, WA 98270
206-851-1106

DRAWN BY: AAL **CHK. BY:** BJ

LICENSURE:

B. J. THOMAS STATE OF WASHINGTON 37041 REGISTERED PROFESSIONAL ENGINEER

JURISDICTIONAL APPROVAL:

DRAWING TITLE:

GENERAL DETAILS

DRAWING NUMBER:

A-4

PARTS LIST			
ITEM #	QUANTITY	PART NUMBER	DESCRIPTION
1	2	601257	ANGLE ARM
2	2	601256	MOUNTING CLAMP
3	2	601235-1	BRACKET
4	2	601235-2	BRACKET
5	1	601258	LABEL, ANGLE
6	4	600679-3	SPACER TUBE
7	14	100525-24	ME FLAT WASHER (STAINLESS STEEL)
8	2	600419-8	M8x1.25x25mm LARGE CARRIAGE BOLT (STAINLESS STEEL)
9	6	6/1/7395	M8 LOCK WASHER (STAINLESS STEEL)
10	4	600419-10	M8x1.25x110mm LARGE HEX HEAD SCREW (STAINLESS STEEL)
11	6	204001-15	M8x1.25 HEX NUT (STAINLESS STEEL)
12	2	225244	CLAMP PLATE
13	8	600419-24	LARGE LOCK WASHER (STAINLESS STEEL)
14	8	204001-21	M12x1.75 HEX NUT (STAINLESS STEEL)
15	4	600419-12	M12x1.75x150mm LARGE CARRIAGE BOLT (STAINLESS STEEL)
17	1	601584	MOLYBDENUM DISULFIDE GREASE

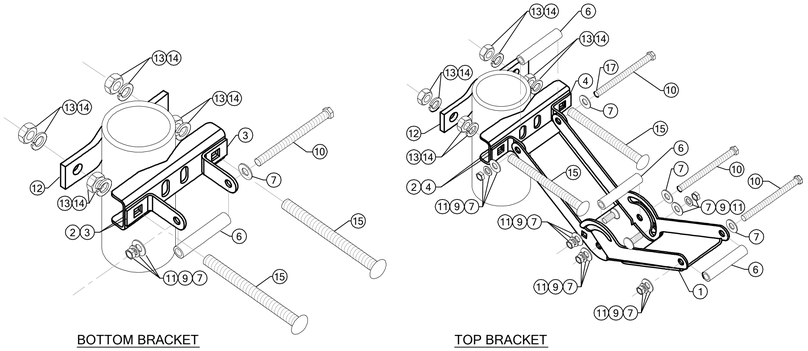

1 A-5 **ANTENNA BRACKET ATTACHMENT DETAIL**
SCALE: NTS

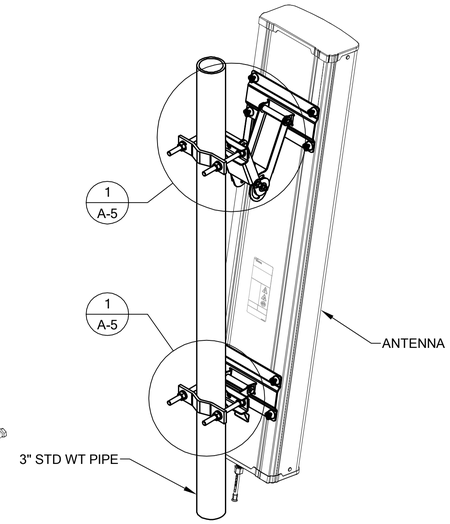

2 A-5 **ANTENNA ATTACHMENT DETAIL**
SCALE: NTS

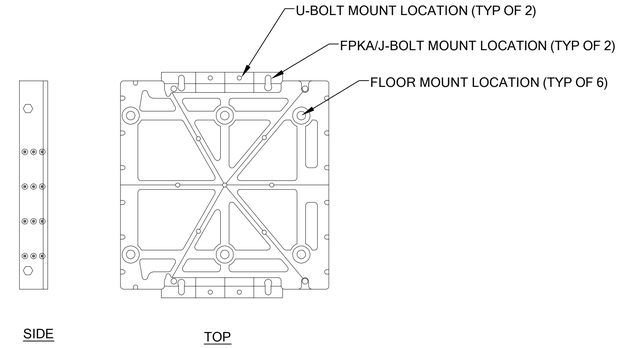

3 A-5 **FMFA DETAIL**
SCALE: NTS

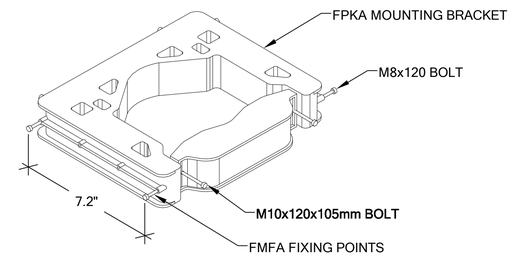

4 A-5 **FPKA DETAIL**
SCALE: NTS

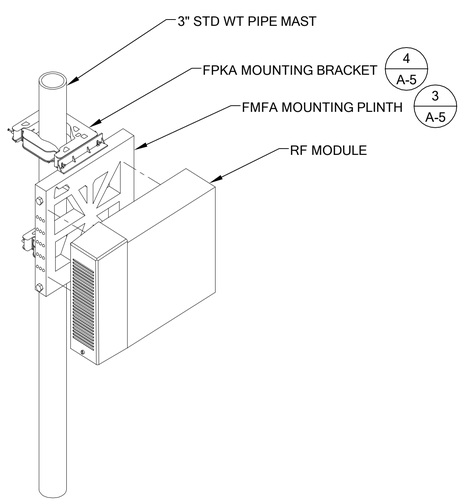

5 A-5 **RRU MOUNTING DETAIL**
SCALE: NTS

NOTE:

1,500 LBS MAX RECOMMENDED LOAD

HOT-DIPPED GALVANIZED FINISH FOR STRUT & HARDWARE

SURFACE AREA: 140.8 SQUARE INCH

WEIGHT: 4.40 LBS (EACH)

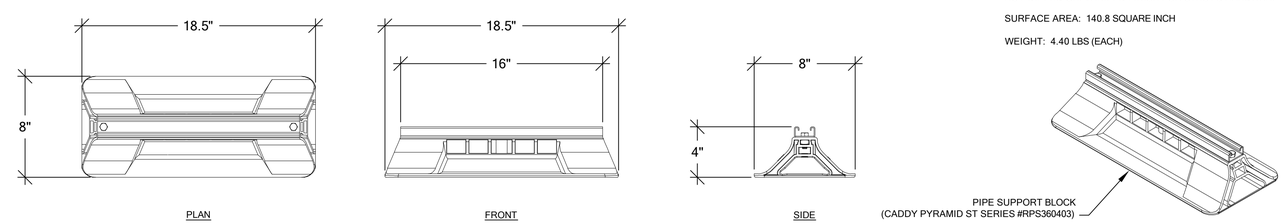

6 A-5 **PYRAMID SLEEPER DETAIL**
SCALE: NTS

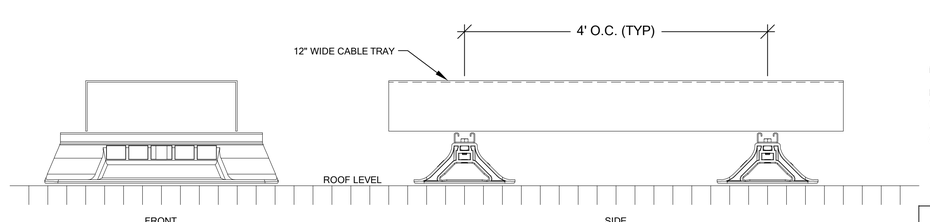

NOTE:

HYBRID CABLE RUN
WITHIN 12" WIDE CABLE TRAY ON SLEEPERS

SLEEPERS
(CADDY PYRAMID ST SERIES #RPS360403)

7 A-5 **ROOFTOP HYBRID CABLE ROUTE DETAIL**
SCALE: NTS

LANDLORD SIGNATURE: _____

T-Mobile

PROJECT INFORMATION:

GATEWOOD RELO
SE03813A

101 STEWART ST
SEATTLE, WA 98101

ISSUED FOR:

BUILDING PERMIT

REVISION HISTORY:

NO.	DATE:	DESCRIPTION:	CHK. BY:
10	6/29/2016	REV CALLOUTS PER EMAIL COMMENTS	BJT
9	6/22/2016	ADD GAMMA STYLE SHEET & UPDATE GAMMA CALLS	BJT
8	6/24/2016	ADD ROOF COVERAGE SHADOWBOX NOTE	BJT
7	6/13/2016	REVISED PER REDLINES	BJT
6	3/23/2016	ADD LATEST STRUCTURAL SHEETS TO DRAWING SET	BJT
5	3/2/2016	REV LOCATION OF SECTORS TO WITHIN NEW SCREEN	BJT
4	12/28/2015	REV PER STRUCTURAL	BJT
3	12/2/2015	REV PER REDLINES; ADDTIONAL REDLINES	BJT
2	12/1/2015	REV PER REDLINES	BJT
1	11/23/2015	ISSUED DESIGN REVIEW	BJT

PLANS PREPARED BY:

B. J. THOMAS, P.E.
7607 80TH AVE NE
MARYSVILLE, WA 98270
206-851-1106

DRAWN BY: AAL **CHK. BY:** BJ

LICENSURE:

B. J. THOMAS STATE OF WASHINGTON 37041 REGISTERED PROFESSIONAL ENGINEER

JURISDICTIONAL APPROVAL:

DRAWING TITLE:

GENERAL DETAILS

DRAWING NUMBER:

A-5

NOTE:

RADIO FREQUENCY & SITE SIGNAGE
TO BE PLACED AT T-MOBILE BTS EQUIPMENT.

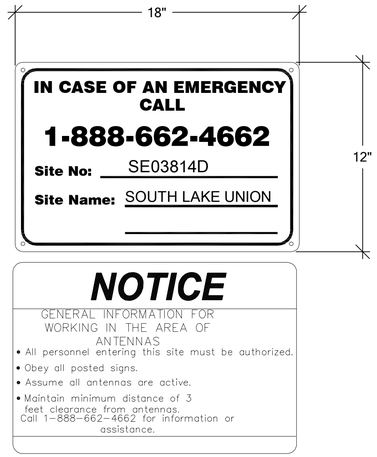

1 A-6 **RF SIGNAGE DETAIL**
SCALE: NTS

NOTE:

RADIO FREQUENCY RADIATION SIGN
TO BE PLACED AT ROOFTOP ACCESS DOOR.

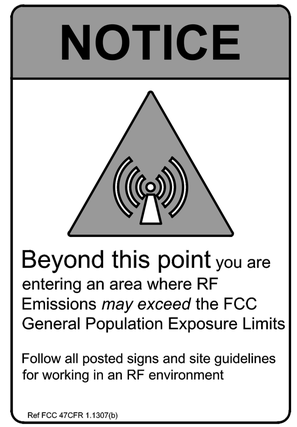

2 A-6 **RF SIGNAGE DETAIL**
SCALE: NTS

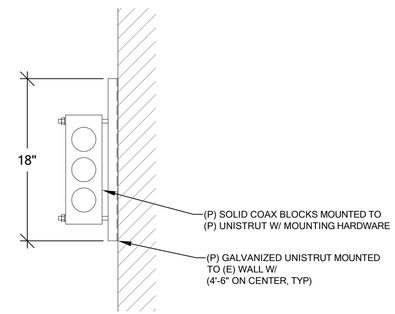

3 A-6 **COAX BLOCK MOUNT - SIDE DETAIL**
SCALE: NTS

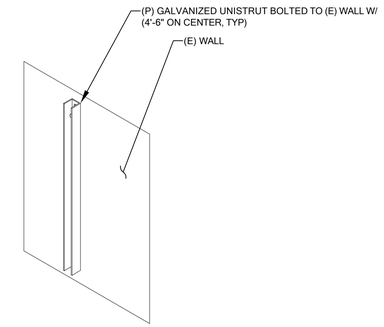

4 A-6 **COAX BLOCK MOUNT - ISO DETAIL**
SCALE: NTS

LANDLORD SIGNATURE: _____

T-Mobile

PROJECT INFORMATION:

GATEWOOD RELO
SE03813A

101 STEWART ST
SEATTLE, WA 98101

ISSUED FOR:

BUILDING PERMIT

REVISION HISTORY:

NO.	DATE:	DESCRIPTION:	CHK. BY:
10	6/29/2016	REV CALLOUTS PER EMAIL COMMENTS	BJT
9	6/22/2016	ADD GAMMA STYLE SHEET & UPDATE GAMMA CALLS	BJT
8	6/24/2016	ADD ROOF COVERAGE SHADOWBOX NOTE	BJT
7	6/13/2016	REVISED PER REDLINES	BJT
6	3/23/2016	ADD LATEST STRUCTURAL SHEETS TO DRAWING SET	BJT
5	3/2/2016	REV LOCATION OF SECTORS TO WITHIN NEW SCREEN	BJT
4	12/28/2015	REV PER STRUCTURAL	BJT
3	12/2/2015	REV PER REDLINES; ADDTIONAL REDLINES	BJT
2	12/1/2015	REV PER REDLINES	BJT
1	11/23/2015	ISSUED DESIGN REVIEW	BJT

PLANS PREPARED BY:

B. J. THOMAS, P.E.
7607 80TH AVE NE
MARYSVILLE, WA 98270
206-851-1106

DRAWN BY: AAL
CHK. BY: BJ

LICENSURE:

JURISDICTIONAL APPROVAL:

DRAWING TITLE:

GENERAL DETAILS

DRAWING NUMBER:

A-6

TOP OF SCREEN
& T-MOBILE SECTOR ANTENNAS
173'-10" AGL

TMZXX-6516-A2M RAD CENTER
171'-6" AGL

SBNHH-1D65A RAD CENTER
169'-10" AGL

PENTHOUSE LEVEL
163'-10" AGL

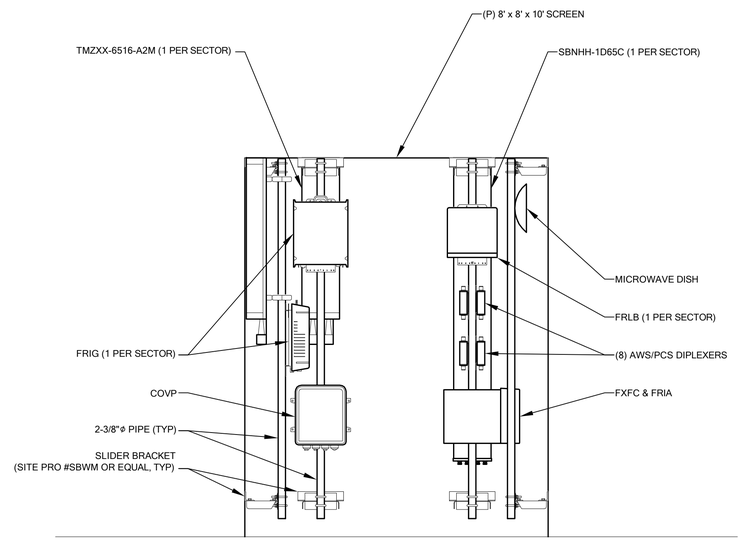

1 / A-7 **MOUNTING DETAIL**
SCALE: NTS

LANDLORD SIGNATURE: _____

T-Mobile

PROJECT INFORMATION:

GATEWOOD RELO
SE03813A

101 STEWART ST
SEATTLE, WA 98101

ISSUED FOR:

BUILDING PERMIT

REVISION HISTORY:

NO.	DATE:	DESCRIPTION:	CHK. BY:
10	6/29/2016	REV CALLOUTS PER EMAIL COMMENTS	BJT
9	6/22/2016	ADD GAMMA STYLE SHEET & UPDATE GAMMA CALLS	BJT
8	6/24/2016	ADD ROOF COVERAGE SHADOWBOX NOTE	BJT
7	6/13/2016	REVISED PER REDLINES	BJT
6	3/23/2016	ADD LATEST STRUCTURAL SHEETS TO DRAWING SET	BJT
5	3/2/2016	REV LOCATION OF SECTORS TO WITHIN NEW SCREEN	BJT
4	12/28/2015	REV PER STRUCTURAL	BJT
3	12/2/2015	REV PER REDLINES; ADDTIONAL REDLINES	BJT
2	12/1/2015	REV PER REDLINES	BJT
1	11/23/2015	ISSUED DESIGN REVIEW	BJT

PLANS PREPARED BY:

B. J. THOMAS, P.E.
7607 80TH AVE NE
MARYSVILLE, WA 98270
206-851-1106

DRAWN BY: AAL
CHK. BY: BJ

LICENSURE:

B. J. THOMAS
STATE OF WASHINGTON
37041
REGISTERED
PROFESSIONAL ENGINEER

JURISDICTIONAL APPROVAL:

DRAWING TITLE:

EQUIPMENT MOUNTING DETAILS

DRAWING NUMBER:

A-7

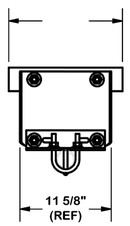

NOTE:

SLIDER BRACKET MOUNT (SITEPRO #SBWM)

PARTS LIST						
ITEM	QTY	PART NO.	PART DESCRIPTION	LENGTH	UNIT WT.	NET WT.
1	4	X-SLD-A	SLIDER BRACKET ANGLE	10 in	3.28	13.12
2	2	X-SLD-BP	SLIDER BRACKET BENT PLATE		8.13	16.26
3	2	X-SLD3	SLIDER BRACKET WALL ANGLE	14 1/2 in	6.10	12.20
4	8	G5802	5/8" x 2" HDG HEX BOLT GR5		0.27	2.17
5	8	G58FW	5/8" HDG USS FLATWASHER		0.07	0.56
6	8	G58LW	5/8" HDG LOCKWASHER		0.03	0.21
7	8	G58NUT	5/8" HDG HEAVY 2H HEX NUT		0.13	1.04
8	8	G12FW	1/2" HDG USS FLATWASHER		0.03	0.27
9	8	G12LW	1/2" HDG LOCKWASHER		0.01	0.11
10	8	G12NUT	1/2" HDG HEAVY 2H HEX NUT		0.07	0.57
11	4	X-UB1212	1/2" X 2-1/2" X 4-1/2" X 2" GALV. U-BOLT		0.66	2.63
12	4	X-UB1300	1/2" X 3" X 5" X 2" GALV U-BOLT		0.70	2.79
					TOTAL WT. #	51.93

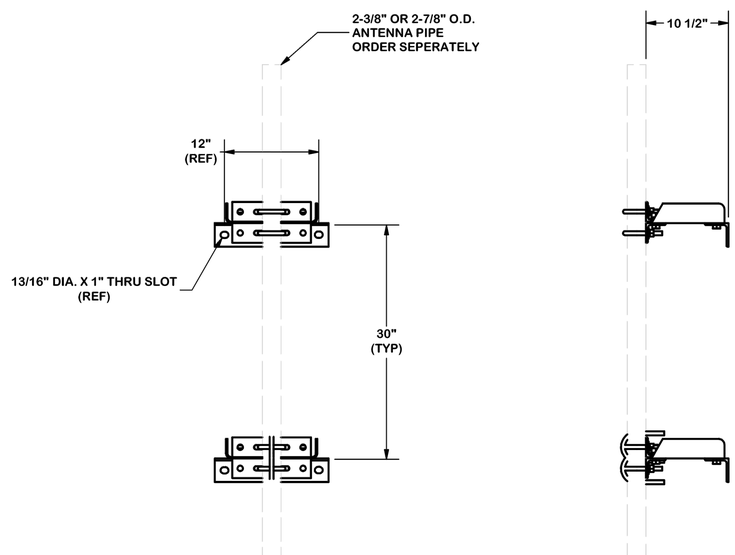

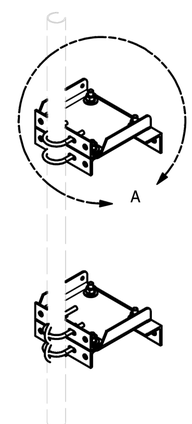

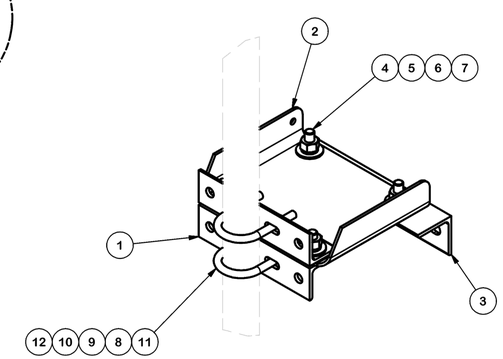

DETAIL A

1 / A-8 **SLIDER BRACKET MOUNT SPEC SHEET**

SCALE: NTS

LANDLORD SIGNATURE: _____

T-Mobile

PROJECT INFORMATION:

GATEWOOD RELO
SE03813A

101 STEWART ST
SEATTLE, WA 98101

ISSUED FOR:

BUILDING PERMIT

REVISION HISTORY:

NO.	DATE:	DESCRIPTION:	CHK. BY:
10	6/29/2016	REV CALLOUTS PER EMAIL COMMENTS	BJT
9	6/22/2016	ADD GAMMA STYLE SHEET & UPDATE GAMMA CALLS	BJT
8	6/24/2016	ADD ROOF COVERAGE SHADOWBOX NOTE	BJT
7	6/13/2016	REVISED PER REDLINES	BJT
6	3/23/2016	ADD LATEST STRUCTURAL SHEETS TO DRAWING SET	BJT
5	3/2/2016	REV LOCATION OF SECTORS TO WITHIN NEW SCREEN	BJT
4	12/28/2015	REV PER STRUCTURAL	BJT
3	12/2/2015	REV PER REDLINES; ADDTIONAL REDLINES	BJT
2	12/1/2015	REV PER REDLINES	BJT
1	11/23/2015	ISSUED DESIGN REVIEW	BJT

PLANS PREPARED BY:

B. J. THOMAS, P.E.
7607 80TH AVE NE
MARYSVILLE, WA 98270
206-851-1106

DRAWN BY: AAL **CHK. BY:** BJ

LICENSURE:

JURISDICTIONAL APPROVAL:

DRAWING TITLE:

ANTENNA MOUNTING DETAILS

DRAWING NUMBER:

A-8

LEGAL DESCRIPTION

LOT 8 AND THE NORTHWESTERLY 49 FEET OF LOT 9 IN BLOCK 27 OF ADDITION TO TOWN OF SEATTLE, AS LAID OUT BY A.A. DENNY (COMMONLY KNOWN AS A.A. DENNY'S 6TH ADDITION TO THE CITY OF SEATTLE), ACCORDING TO PLAT RECORDED IN VOLUME 1 OF PLATS, AT PAGE(S) 99, RECORDS OF KING COUNTY, WASHINGTON;
EXCEPT THE SOUTHWESTERLY 9 FEET THEREOF CONDEMNED FOR THE WIDENING OF FIRST AVENUE IN KING COUNTY SUPERIOR COURT CAUSE NO. 7092, AS PROVIDED BY ORDINANCE NO. 1129 OF THE CITY OF SEATTLE.

EASEMENTS

(#) CORRESPONDS WITH ITEM NUMBER IN 'SCHEDULE B' OF TITLE REPORT.

THE FOLLOWING EASEMENTS FROM THE REFERENCED TITLE REPORT CONTAIN SUFFICIENT INFORMATION TO BE DEPICTED ON THE PLAN. OTHER EASEMENTS OR ENCUMBRANCES, IF ANY, MAY AFFECT THE PROPERTY, BUT LACK SUFFICIENT INFORMATION TO BE SHOWN.

- (4) CONDITIONS, EASEMENTS, ETC., PER PLAT RECORDED IN VOLUME 1 OF PLATS, PAGE 99, RECORDS OF KING COUNTY – NOTHING TO SHOW
- (5) SUBJECT TO PUBLIC PLACE INDEMNITY AGREEMTN PER RECORDING NO. 8512130831, RECORDS OF KING COUNTY – DOCUMENT REFERS TO TIEBACKS DURING CONSTRUCTION, NOTHING TO SHOW
- (6) SUBJECT TO TERMS AND CONDITIONS IN MEMORANDUM OF DRAINAGE CONTROL PLAN PER RECORDING NO. 8604020519, RECORDS OF KING COUNTY – NOTHING TO SHOW
- (7) BROADBAND COMMUNICATION SERVICES EASEMENT PER RECORDING NO. 9107190977, RECORDS OF KING COUNTY – DOCUMENT CONTAINS NO EASEMENT DESCRIPTION, NOT SHOWN
- (8) CONDITIONS, EASEMENTS, ETC., PER RECORDING NO. 8608219011, RECORDS OF KING COUNTY – COPY PROVIDED IS ILLEGIBLE, NO OTHER PLAT FOUND IN KING COUNTY RECORDS – NOT SHOWN
- (9) CONDITIONS, EASEMENTS, ETC., PER RECORDING NO. 8608219011, RECORDS OF KING COUNTY – PLAT SHOWS BUILDING'S RELATIONSHIP TO BOUNDARY LINES
- (10) MATTERS DISCLOSED BY ALTA SURVEY DATED MAY 4, 2009 AND AUGUST 17, 2011 – SURVEY NOT PROVIDED, NOT SHOWN

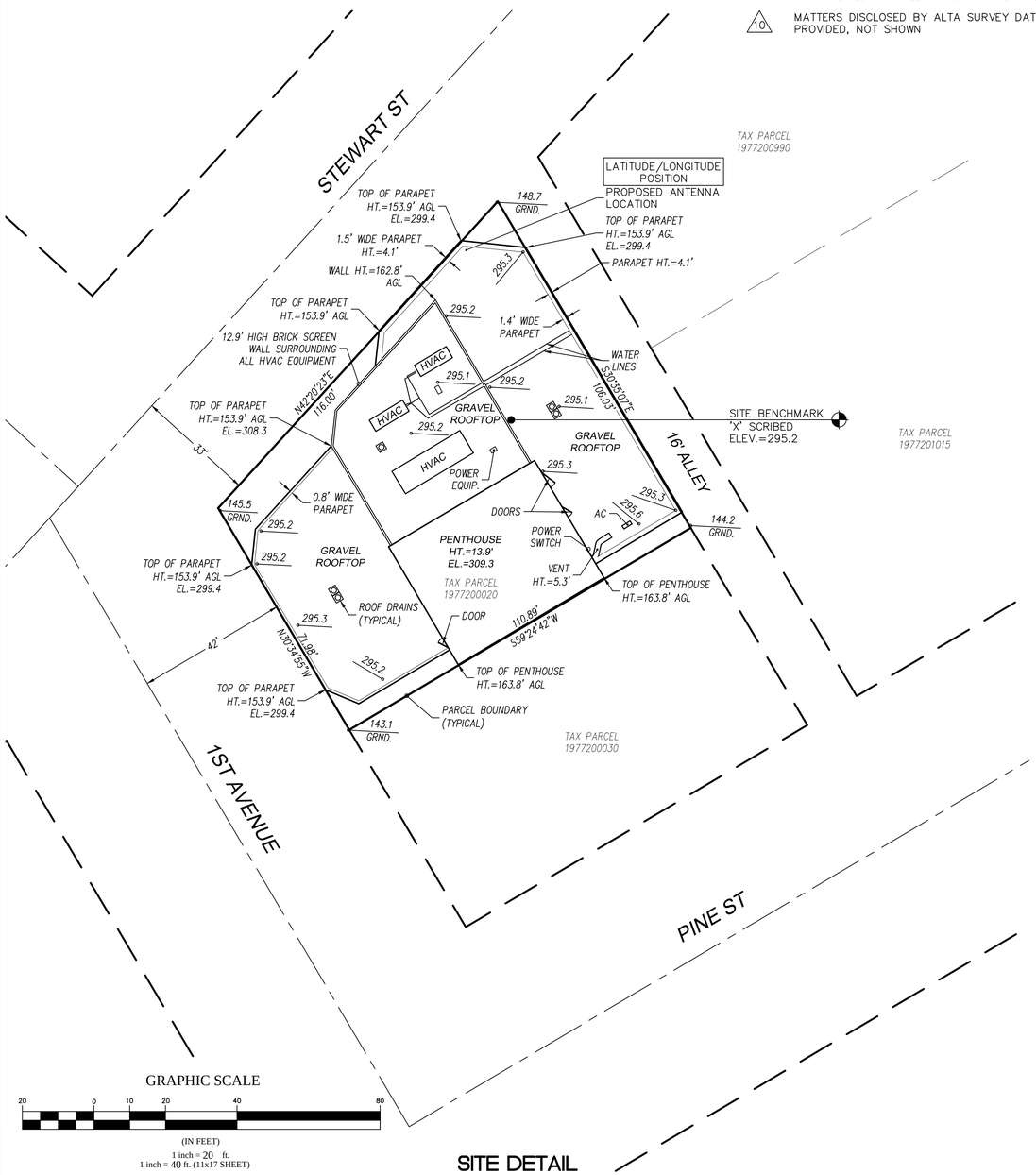

SITE DETAIL

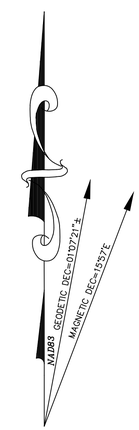

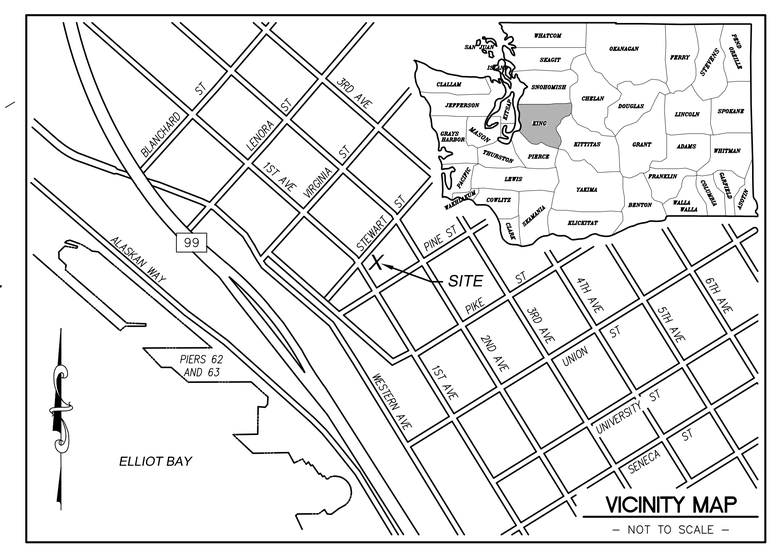

VICINITY MAP
– NOT TO SCALE –

LATITUDE/LONGITUDE POSITION

COORDINATE DATA AT PROPOSED ANTENNA LOCATION:
NAD 83
LAT – 47°36'37.75" N
LONG – 122°20'27.15" W
NAVD 88
ELEV.= 145.5 FEET (GRND)

NAVD 88

BENCHMARK IS "SEAT"
NGS GPS CORS STATION.
ELEV = 224.5'

ELEVATION DERIVED USING GPS. ACCURACY MEETS OR EXCEEDS 1A STANDARDS AS DEFINED ON THE FAA ASAC INFORMATION SHEET 91:003.

NOTES

1) TITLE REPORT ISSUED BY FIRST AMERICAN TITLE COMPANY, GUARANTEE NO. 2371436, DATED SEPTEMBER 23, 2015.
2) FIELD WORK CONDUCTED IN OCTOBER, 2015.
3) BASIS OF BEARING: WASHINGTON STATE PLANE COORDINATE SYSTEM, NORTH ZONE (NAD83).
4) UNDERGROUND UTILITIES SHOWN HEREON, IF ANY, WERE DELINEATED FROM SURFACE EVIDENCE AND/OR UTILITY COMPANY RECORDS. CRITICAL LOCATIONS SHOULD BE VERIFIED PRIOR TO DESIGN AND CONSTRUCTION.
5) FEMA DESIGNATION: ZONE 'X' (AREAS DETERMINED TO BE OUTSIDE 500–YEAR FLOODPLAIN), PANEL 327 OF 1725, FIRM MAP NUMBER 53033C0327F, EFFECTIVE DATE MAY 16, 1995.

BUILDING HEIGHT NOTE

AVERAGE GROUND ELEVATION IS 145.5 FEET, USING RULE 4–2012
HEIGHTS BASED ON THIS ELEVATION ARE AS FOLLOWS:
ROOF HT.=149.7'
PENTHOUSE HT.=163.8'
SCREEN WALL HT.=162.8'
PARAPET HT.=153.9'

LEGEND

- SUBJECT BOUNDARY LINE
- RIGHT–OF–WAY CENTERLINE
- RIGHT–OF–WAY LINE
- ADJACENT BOUNDARY LINE
- SECTIONAL BREAKDOWN LINE
- OP — OVERHEAD POWER LINE
- UP — BURIED POWER LINE
- G — BURIED GAS LINE
- OT — OVERHEAD TELEPHONE LINE
- UT — BURIED TELEPHONE LINE
- W — BURIED WATER LINE
- SS — BURIED SANITARY SEWER
- SD — BURIED STORM DRAIN
- DITCH LINE/FLOW LINE
- ROCK RETAINING WALL
- VEGETATION LINE
- CHAIN LINK FENCE
- WOOD FENCE
- BARBED WIRE/WIRE FENCE
- TRANSFORMER
- LIGHT STANDARD
- POWER VAULT
- UTILITY BOX
- UTILITY POLE
- POLE GUY WIRE
- GAS VALVE
- GAS METER
- TELEPHONE VAULT
- TELEPHONE RISER
- FIRE HYDRANT
- GATE VALVE
- WATER METER
- FIRE STAND PIPE
- CATCH BASIN, TYPE I
- CATCH BASIN, TYPE II
- SIGN
- BOLLARD
- MAIL BOX
- 234.21 SPOT ELEVATION

NOTE:
1) ALL ELEVATIONS SHOWN ARE ABOVE MEAN SEA LEVEL (AMSL) AND ARE REFERENCED TO THE NAVD88 DATUM.
2) ALL TOWER, TREE AND APPURTENANCE HEIGHTS ARE ABOVE GROUND LEVEL (AGL) AND ARE ACCURATE TO ± 0.5 FEET OR ± 1% OF TOTAL HEIGHT, WHICHEVER IS GREATER.

TREE LEGEND

DECIDUOUS TREE
AL12 — TRUNK DIAMETER (IN)
TYPE

AL=ALDER
MP=MAPLE
DS=DECIDUOUS
MA=MADRONA
OK=OAK
CH=CHERRY

EVERGREEN TREE
DF18
195.2
HEIGHT AGL IF MEASURED

CE=CEDAR
DF=DOUGLAS FIR
HE=HEMLOCK
PI=PINE
EVG=EVERGREEN

NOTE:
TREE DRIP LINES ARE NOT TO SCALE. TREE SYMBOLS REFERENCE TRUNK LOCATION ONLY. TRUNK DIAMETERS WERE APPROXIMATED AT 3.5' TO 4' ABOVE GROUND LEVEL. TREES SHOWN ARE FOR REFERENCE ONLY AND OTHER TREES AND VEGETATION MAY EXIST.

SITE INFORMATION

TAX LOT NUMBER	1977200020
SITE ADDRESS	101 STEWART ST SEATTLE, WA 98101
SITE CONTACT	.
PHONE NUMBER	.
ZONING	DMC–125 (CITY OF SEATTLE)
TOTAL LOT AREA	9869± S.F.(0.23 AC.)
PROJECT AREA	TO BE DETERMINED

SURVEY REFERENCE

1) RECORD OF SURVEY PER A.F. NO. 9902019006, RECORDS OF KING COUNTY.
2) RECORD OF SURVEY PER A.F. NO. 20101027900001, RECORDS OF KING COUNTY.

BOUNDARY DISCLAIMER

THIS PLAN DOES NOT REPRESENT A BOUNDARY SURVEY. SUBJECT AND ADJACENT PROPERTY LINES ARE DEPICTED USING FIELD–FOUND EVIDENCE AND RECORD INFORMATION.

CAUTION!

UNDERGROUND UTILITIES EXIST IN THE AREA AND UTILITY INFORMATION SHOWN MAY BE INCOMPLETE. STATE LAW REQUIRES THAT CONTRACTOR CONTACT THE ONE–CALL UTILITY LOCATE SERVICE AT LEAST 48 HOURS BEFORE STARTING ANY CONSTRUCTION.
1-800-424-5555

T-Mobile
Get more from life

B.J. THOMAS, PE

DUNCANSON
Company, Inc.
145 SW 155th Street, Suite 102
Seattle, Washington 98166
Phone 206.244.4141
Fax 206.244.4455

SITE
SE03813A
GATEWOOD RELO
101 STEWART ST
SEATTLE, WA 98101
KING COUNTY

THIS DRAWING WAS CREATED FOR THE EXCLUSIVE USE OF THE CLIENT NAMED HEREON, AND IS NOT TO BE USED IN WHOLE OR IN PART WITHOUT WRITTEN AUTHORIZATION FROM SAID CLIENT.
©2015, DUNCANSON COMPANY, INC.

FLD. CREW:	BM/JW
FLD. BOOK:	383/21
DRAWN BY:	LAC
JOB #:	01808.941
DATE:	10/09/15

REVISIONS

DATE	DESCRIPTION	BY

KEVIN J. WALKER
STATE OF WASHINGTON
41038
REGISTERED
PROFESSIONAL LAND SURVEYOR
10/09/15

SHEET TITLE
EXISTING SITE SURVEY
SEC 31, TWP 25 N, RNG 4 E, WM

SHEET NUMBER
SV1

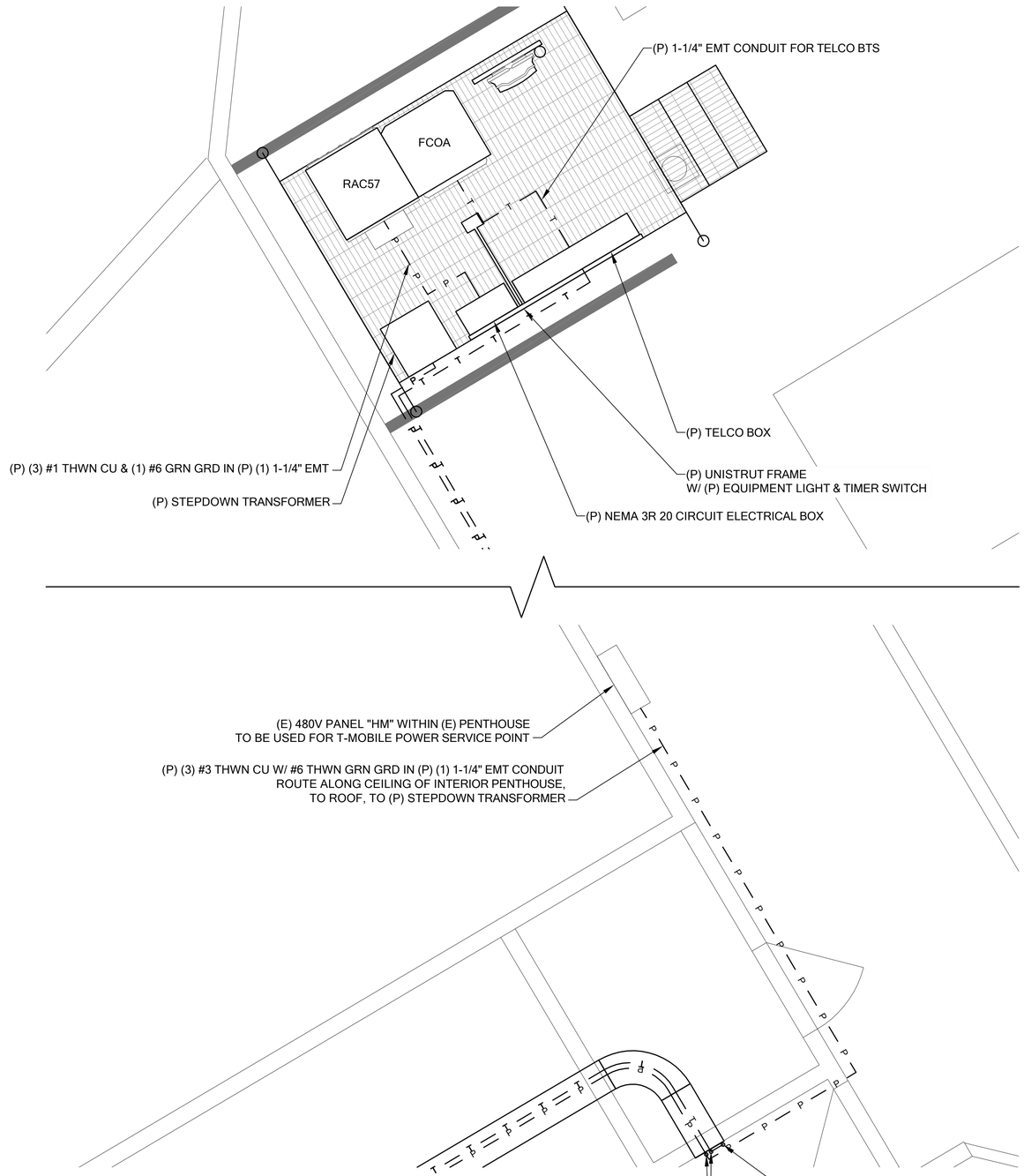

GROUNDING NOTES:

1. GROUNDING SHALL COMPLY WITH LATEST EDITION OF THE NATIONAL ELECTRICAL CODE.
2. MINIMUM BENDING RADIUS FOR GROUND CONDUCTOR IS 8".
3. NO SPLICES PERMITTED IN GROUND CONDUCTORS.
4. ALL GROUNDING CONNECTORS TO BE CLEAN AND FREE OF PAINT AT THEIR MATING SURFACES AND INSTALLED PER MANUFACTURER'S RECOMMENDATIONS. USE PENETROX OR EQUIVALENT ANTIOXIDANT GREASE.
5. ALL GROUND BAR CONNECTIONS ARE TO BE 2 HOLE LUG COMPRESSION TYPE. STACKED CONNECTIONS ARE NOT ACCEPTABLE. BACK TO BACK CONNECTIONS ON OPPOSITE SIDES OF THE GROUND BAR WILL BE PERMITTED.
6. ENSURE ALL MECHANICAL CONNECTORS ARE TORQUED TO THE MANUFACTURER'S SPECIFIED VALUES.
7. MULTIPLE BONDS ON GROUND RODS TO BE SEPARATED BY ATLEAST 6".
8. MAXIMUM RESISTANCE OF THE COMPLETED GROUND SYSTEM SHALL NOT EXCEED A RESISTANCE OF 5 OHMS TO EARTH.
9. GROUND WIRES SHALL NOT BE INSTALLED THROUGH HOLES IN ANY METAL OBJECTS OR SUPPORTS; TO PRECLUDE ESTABLISHING A "CHOKE" POINT.
10. GROUND BARS SHALL NOT BE FIELD MODIFIED.
11. GROUND RING BURIAL DEPTH SHALL BE 30".
12. A CERTIFIED CONTRACTOR WILL MAKE ALL MEASUREMENTS REQUIRED TO TEST THE GROUNDING SYSTEM USING A MEGGER OR EQUIVALENT. THE ACCEPTABLE RESISTANCE MEASURED FOR THE GROUNDING SYSTEM WILL NOT EXCEED 5 OHMS RESISTANCE. THREE DISTANCES SHALL BE USED: 1 AT 100 FEET, 1 AT 70 FEET, AND 1 AT 35 FEET. THESE DISTANCES ARE SUBJECT TO A SITE BY SITE BASIS. T-MOBILE-WTS SHALL BE GIVEN 24 HOURS NOTICE. ALL COSTS ASSOCIATED WITH GROUND TESTING WILL BE AT THE EXPENSE OF THE CONTRACTOR.

SYMBOL LEGEND:

MGB GROUND BAR

CADWELD

MECHANICAL CONNECTION

COPPER GROUND ROD

GROUND INSPECTION WELL

EXPOSED WIRING

UNDERGROUND WIRING

ELECTRICAL GROUNDING PLAN

22x34 SCALE: 1/2" = 1'
11x17 SCALE: 1/4" = 1'

LANDLORD SIGNATURE: _____

T-Mobile

PROJECT INFORMATION:

GATEWOOD RELO
SE03813A

101 STEWART ST
SEATTLE, WA 98101

ISSUED FOR:

BUILDING PERMIT

REVISION HISTORY:

NO.	DATE:	DESCRIPTION:	CHK. BY:
10	6/29/2016	REV CALLOUTS PER EMAIL COMMENTS	BJT
9	6/22/2016	ADD GAMMA STYLE SHEET & UPDATE GAMMA CALLS	BJT
8	6/24/2016	ADD ROOF COVERAGE SHADOWBOX NOTE	BJT
7	6/13/2016	REVISED PER REDLINES	BJT
6	3/23/2016	ADD LATEST STRUCTURAL SHEETS TO DRAWING SET	BJT
5	3/2/2016	REV LOCATION OF SECTORS TO WITHIN NEW SCREEN	BJT
4	12/28/2015	REV PER STRUCTURAL	BJT
3	12/2/2015	REV PER REDLINES; ADDTIONAL REDLINES	BJT
2	12/1/2015	REV PER REDLINES	BJT
1	11/23/2015	ISSUED DESIGN REVIEW	BJT

PLANS PREPARED BY:

B. J. THOMAS, P.E.
7607 80TH AVE NE
MARYSVILLE, WA 98270
206-851-1106

DRAWN BY: AAL
CHK. BY: BJ

LICENSURE:

B. J. THOMAS
STATE OF WASHINGTON
37041
REGISTERED
PROFESSIONAL ENGINEER

JURISDICTIONAL APPROVAL:

DRAWING TITLE:

ELECTRICAL GROUNDING PLAN

DRAWING NUMBER:

E-1

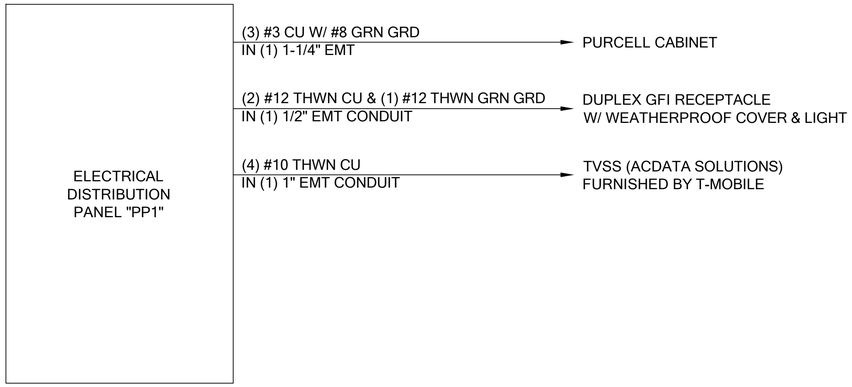

ELECTRICAL BLOCK DIAGRAM

PANEL SCHEDULE

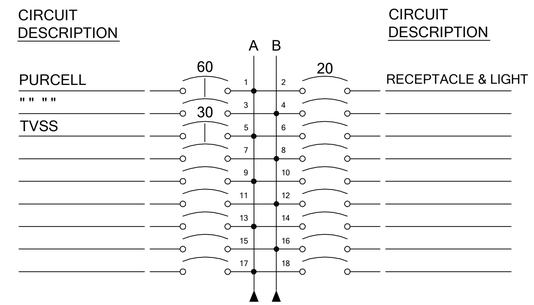

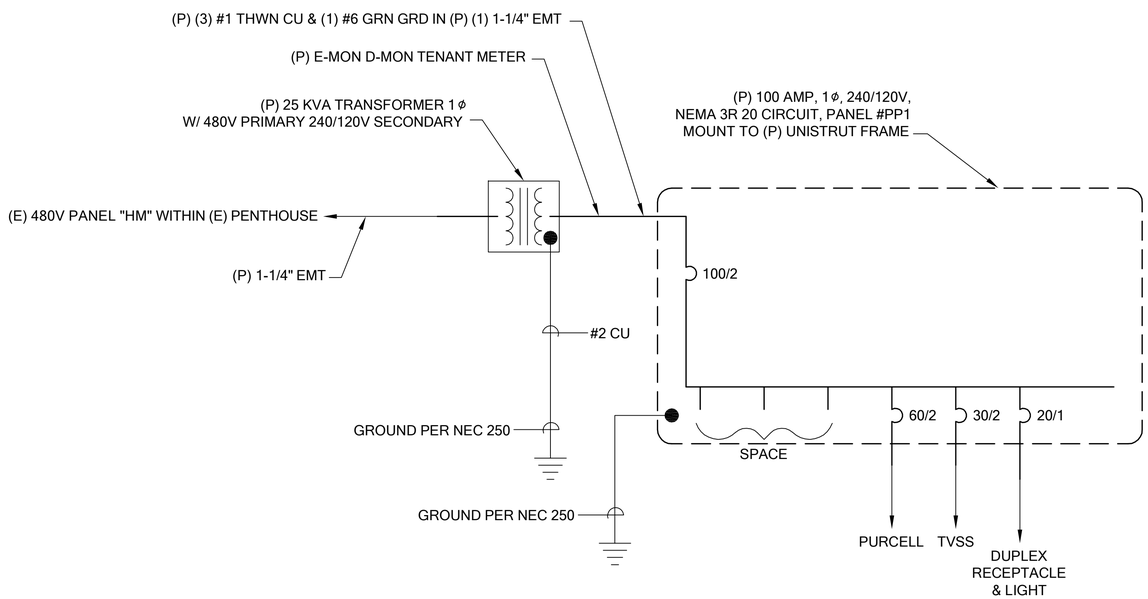

ELECTRICAL ONE LINE

LANDLORD SIGNATURE: _____

T-Mobile

PROJECT INFORMATION:

GATEWOOD RELO
SE03813A

101 STEWART ST
SEATTLE, WA 98101

ISSUED FOR:

BUILDING PERMIT

REVISION HISTORY:

NO.	DATE:	DESCRIPTION:	CHK. BY:
10	6/29/2016	REV CALLOUTS PER EMAIL COMMENTS	BJT
9	6/22/2016	ADD GAMMA STYLE SHEET & UPDATE GAMMA CALLS	BJT
8	6/24/2016	ADD ROOF COVERAGE SHADOWBOX NOTE	BJT
7	6/13/2016	REVISED PER REDLINES	BJT
6	3/23/2016	ADD LATEST STRUCTURAL SHEETS TO DRAWING SET	BJT
5	3/2/2016	REV LOCATION OF SECTORS TO WITHIN NEW SCREEN	BJT
4	12/28/2015	REV PER STRUCTURAL	BJT
3	12/2/2015	REV PER REDLINES; ADDTIONAL REDLINES	BJT
2	12/1/2015	REV PER REDLINES	BJT
1	11/23/2015	ISSUED DESIGN REVIEW	BJT

PLANS PREPARED BY:

B. J. THOMAS, P.E.
7607 80TH AVE NE
MARYSVILLE, WA 98270
206-851-1106

DRAWN BY: AAL **CHK. BY:** BJ

LICENSURE:

JURISDICTIONAL APPROVAL:

DRAWING TITLE:

ELECTRICAL DETAILS

DRAWING NUMBER:

E-2

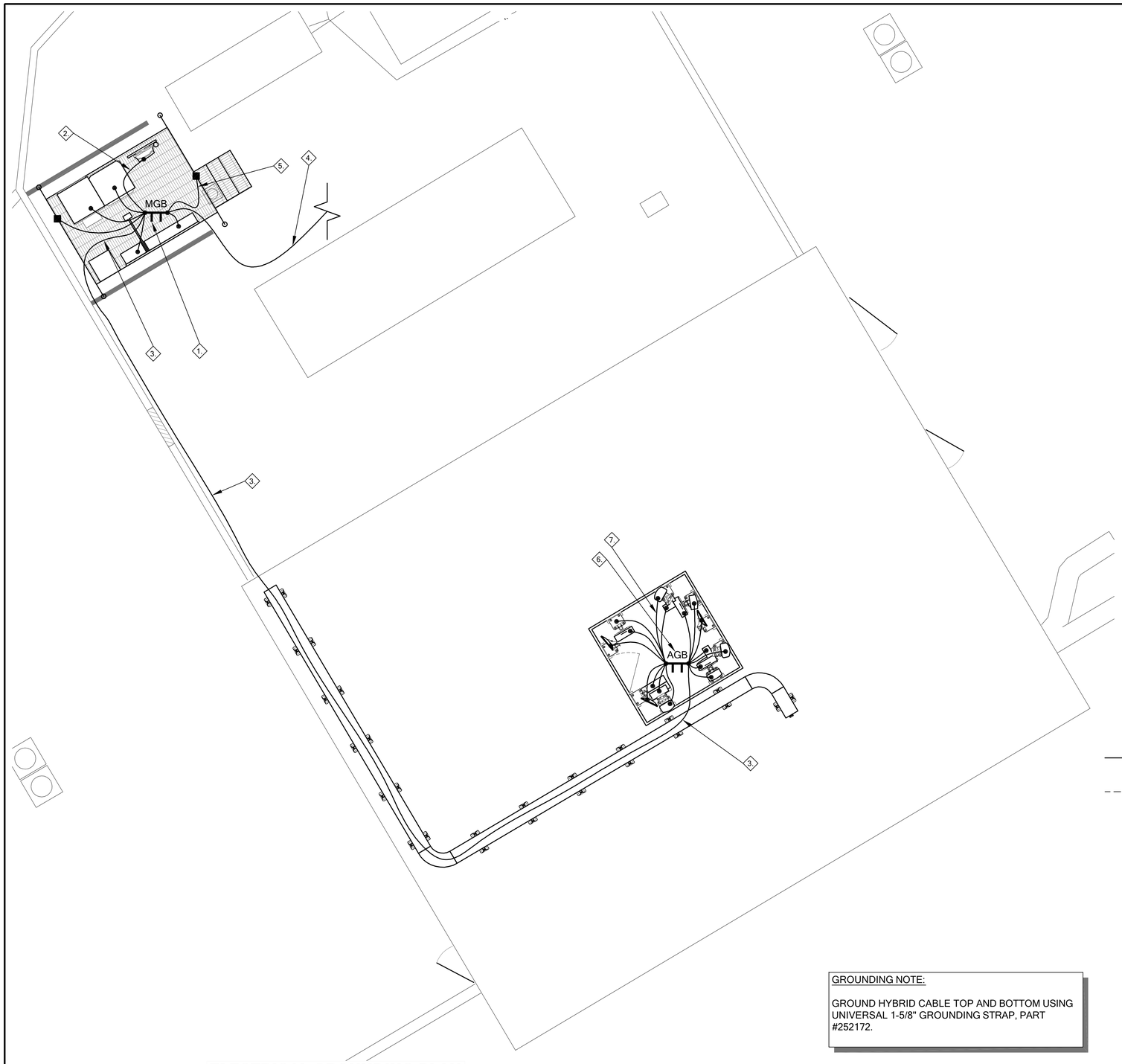

ELECTRICAL GROUNDING PLAN

22x34 SCALE: 1/4" = 1'
11x17 SCALE: 1/8" = 1'

GROUNDING NOTES:

1. GROUNDING SHALL COMPLY WITH LATEST EDITION OF THE NATIONAL ELECTRICAL CODE.
2. MINIMUM BENDING RADIUS FOR GROUND CONDUCTOR IS 8".
3. NO SPLICES PERMITTED IN GROUND CONDUCTORS.
4. ALL GROUNDING CONNECTORS TO BE CLEAN AND FREE OF PAINT AT THEIR MATING SURFACES AND INSTALLED PER MANUFACTURER'S RECOMMENDATIONS. USE PENETROX OR EQUIVALENT ANTIOXIDANT GREASE.
5. ALL GROUND BAR CONNECTIONS ARE TO BE 2 HOLE LUG COMPRESSION TYPE. STACKED CONNECTIONS ARE NOT ACCEPTABLE. BACK TO BACK CONNECTIONS ON OPPOSITE SIDES OF THE GROUND BAR WILL BE PERMITTED.
6. ENSURE ALL MECHANICAL CONNECTORS ARE TORQUED TO THE MANUFACTURER'S SPECIFIED VALUES.
7. MULTIPLE BONDS ON GROUND RODS TO BE SEPARATED BY ATLEAST 6".
8. MAXIMUM RESISTANCE OF THE COMPLETED GROUND SYSTEM SHALL NOT EXCEED A RESISTANCE OF 5 OHMS TO EARTH.
9. GROUND WIRES SHALL NOT BE INSTALLED THROUGH HOLES IN ANY METAL OBJECTS OR SUPPORTS; TO PRECLUDE ESTABLISHING A "CHOKE" POINT.
10. GROUND BARS SHALL NOT BE FIELD MODIFIED.
11. GROUND RING BURIAL DEPTH SHALL BE 30".
12. A CERTIFIED CONTRACTOR WILL MAKE ALL MEASUREMENTS REQUIRED TO TEST THE GROUNDING SYSTEM USING A MEGGER OR EQUIVALENT. THE ACCEPTABLE RESISTANCE MEASURED FOR THE GROUNDING SYSTEM WILL NOT EXCEED 5 OHMS RESISTANCE. THREE DISTANCES SHALL BE USED: 1 AT 100 FEET, 1 AT 70 FEET, AND 1 AT 35 FEET. THESE DISTANCES ARE SUBJECT TO A SITE BY SITE BASIS. T-MOBILE-WTS SHALL BE GIVEN 24 HOURS NOTICE. ALL COSTS ASSOCIATED WITH GROUND TESTING WILL BE AT THE EXPENSE OF THE CONTRACTOR.

SYMBOL LEGEND:

MGB — GROUND BAR
CADWELD
MECHANICAL CONNECTION
COPPER GROUND ROD
GROUND INSPECTION WELL
EXPOSED WIRING
UNDERGROUND WIRING

GROUNDING KEYED NOTES:

1. PROPOSED MGB NEAR BTS EQUIPMENT MOUNT TO PROPOSED UNISTRUT H-FRAME
2. BOND PROPOSED BTS CABINETS & EQUIPMENT TO PROPOSED MGB
3. BOND PROPOSED MGB NEAR BTS EQUIPMENT TO PROPOSED AGB
4. BOND PROPOSED MGB NEAR BTS EQUIPMENT TO EXISTING BUILDING GROUND
5. BOND PROPOSED EQUIPMENT PLATFORM TO PROPOSED MGB NEAR BTS EQUIPMENT (TYP OF 2 PLACES)
6. PROPOSED AGB
7. BOND PROPOSED ANTENNAS, RADIOS, & EQUIPMENT TO PROPOSED AGB

GROUNDING NOTE:

GROUND HYBRID CABLE TOP AND BOTTOM USING UNIVERSAL 1-5/8" GROUNDING STRAP, PART #252172.

LANDLORD SIGNATURE: _____

T-Mobile

PROJECT INFORMATION:

GATEWOOD RELO
SE03813A

101 STEWART ST
SEATTLE, WA 98101

ISSUED FOR:

BUILDING PERMIT

REVISION HISTORY:

NO.	DATE:	DESCRIPTION:	CHK. BY:
10	6/29/2016	REV CALLOUTS PER EMAIL COMMENTS	BJT
9	6/22/2016	ADD GAMMA STYLE SHEET & UPDATE GAMMA CALLS	BJT
8	6/24/2016	ADD ROOF COVERAGE SHADOWBOX NOTE	BJT
7	6/13/2016	REVISED PER REDLINES	BJT
6	3/23/2016	ADD LATEST STRUCTURAL SHEETS TO DRAWING SET	BJT
5	3/2/2016	REV LOCATION OF SECTORS TO WITHIN NEW SCREEN	BJT
4	12/28/2015	REV PER STRUCTURAL	BJT
3	12/2/2015	REV PER REDLINES; ADDTIONAL REDLINES	BJT
2	12/1/2015	REV PER REDLINES	BJT
1	11/23/2015	ISSUED DESIGN REVIEW	BJT

PLANS PREPARED BY:

B. J. THOMAS, P.E.
7607 80TH AVE NE
MARYSVILLE, WA 98270
206-851-1106

DRAWN BY: AAL
CHK. BY: BJ

LICENSURE:

B. J. THOMAS
STATE OF WASHINGTON
37041
REGISTERED
PROFESSIONAL ENGINEER

JURISDICTIONAL APPROVAL:

DRAWING TITLE:

ELECTRICAL GROUNDING PLAN

DRAWING NUMBER:

E-3

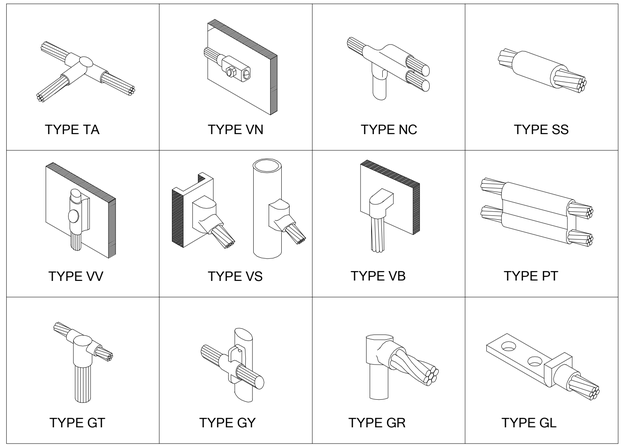

1 / E-4 **TYPICAL CADWELD CONNECTIONS**
SCALE: NTS

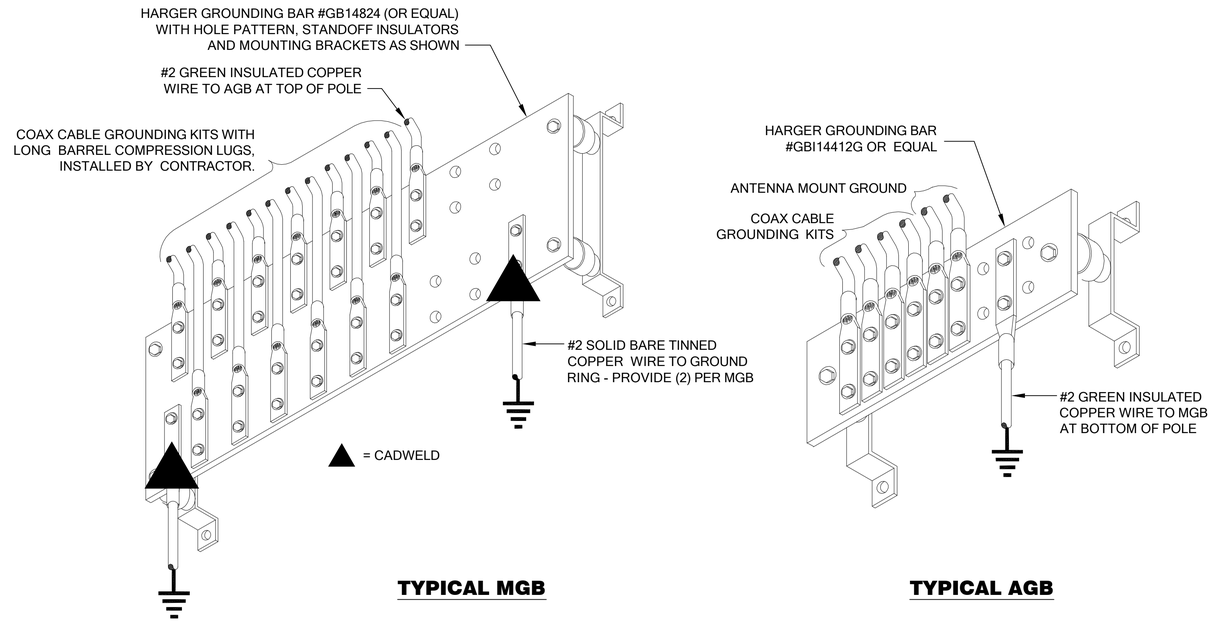

2 / E-4 **GROUND BAR DETAILS**
SCALE: NTS

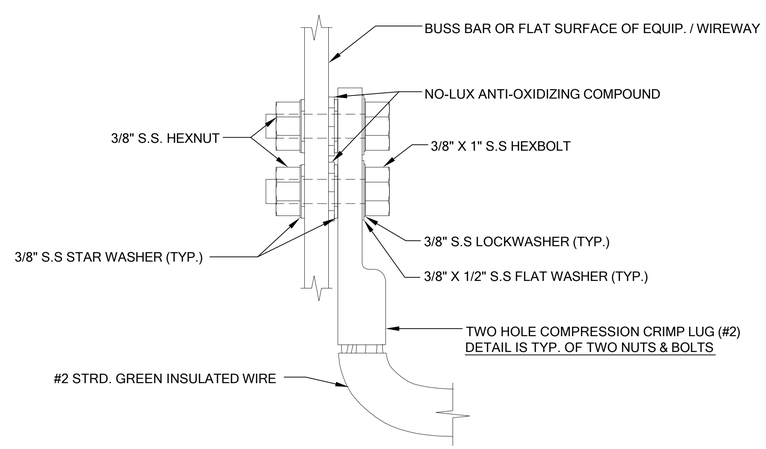

NOTES:

1. TYPICAL ALL GROUND WIRES FOR ELECTRICAL AND OTHER EQUIPMENT.

2. THE ENTIRE LUG AND AREA TO BE SPRAYED WITH CLEAR LACQUER OR COLD GALVANIZING SPRAY

3. GROUND LEADS TO BE CAD WELDED TO GROUND RING.

3 / E-4 **TYPICAL CABINET GROUNDING DETAIL**
SCALE: NTS

LANDLORD SIGNATURE: _____

T-Mobile

PROJECT INFORMATION:

GATEWOOD RELO
SE03813A

101 STEWART ST
SEATTLE, WA 98101

ISSUED FOR:

BUILDING PERMIT

REVISION HISTORY:

NO.	DATE:	DESCRIPTION:	CHK. BY:
10	6/29/2016	REV CALLOUTS PER EMAIL COMMENTS	BJT
9	6/22/2016	ADD GAMMA STYLE SHEET & UPDATE GAMMA CALLS	BJT
8	6/24/2016	ADD ROOF COVERAGE SHADOWBOX NOTE	BJT
7	6/13/2016	REVISED PER REDLINES	BJT
6	3/23/2016	ADD LATEST STRUCTURAL SHEETS TO DRAWING SET	BJT
5	3/2/2016	REV LOCATION OF SECTORS TO WITHIN NEW SCREEN	BJT
4	12/28/2015	REV PER STRUCTURAL	BJT
3	12/2/2015	REV PER REDLINES; ADDTIONAL REDLINES	BJT
2	12/1/2015	REV PER REDLINES	BJT
1	11/23/2015	ISSUED DESIGN REVIEW	BJT

PLANS PREPARED BY:

B. J. THOMAS, P.E.
7607 80TH AVE NE
MARYSVILLE, WA 98270
206-851-1106

DRAWN BY: AAL **CHK. BY:** BJ

LICENSURE:

JURISDICTIONAL APPROVAL:

DRAWING TITLE:

ELECTRICAL GROUNDING PLAN

DRAWING NUMBER:

E-4

SITE LOADING CHART

SECTOR	COLOR	ANTENNA MODEL #	VENDOR	AZIMUTH (TN)	MECHANICAL DOWNTILT	ELECTRICAL DOWNTILT	RADIATION CENTER	CABLE TYPE
ALPHA	RED	TMZXX-6516-A2M SBNHH-1D65C	ANDREW COMMSCOPE	80°	3° 3°	2° 2°	171'-6" AGL 169'-10" AGL	(1) 100' HYBRID CABLE
BETA	GREEN	TMZXX-6516-A2M SBNHH-1D65C	ANDREW COMMSCOPE	150°	3° 3°	2° 3°	171'-6" AGL 169'-10" AGL	
GAMMA	BLUE	SBNHH-1D65B	COMMSCOPE	300°	3°	3°	170'-6" AGL	
	ORANGE	MICROWAVE	TBD	TBD	TBD	TBD	172'-6" AGL	(1) 1/2" COAX FEEDER
	ORANGE	MICROWAVE	TBD	TBD	TBD	TBD	172'-6" AGL	(1) 1/2" COAX FEEDER
	ORANGE	MICROWAVE	TBD	TBD	TBD	TBD	172'-6" AGL	(1) 1/2" COAX FEEDER

ANTENNA AND COAX GENERAL NOTES:

1. ALL ANTENNA AND COAXIAL ANTENNA CABLE TO BE FURNISHED BY T-MOBILE AND INSTALLED BY CONTRACTOR.
2. COAX COLOR CODING: ANTENNAS TO BE NUMBERED IN A CLOCKWISE MANNER FROM TRUE NORTH AND COLOR CODED AS FOLLOWS:
3. THE ABOVE COAX COLOR CODING APPLIES TO SECTORIZED SITES. FOR OMNI SITES, USE THE AT0, BT0, & GT0 COLOR CODES ONLY.
4. COAX SHALL BE TAGGED WITH COLOR CODING AT (2) PLACES USING 1" WIDE WEATHER PROOF COLORED VINYL TAPE AT THE FOLLOWING LOCATIONS:

   #1 - AT ANTENNA CONNECTION
   #2 - AT ENTRY TO EQUIPMENT CABINET

5. RUN COAXIAL CABLE WITH MINIMUM 12" SLACK & 12" FROM EDGE OF EQUIPMENT CABINETS, ACROSS WAVE GUIDE BRIDGE (IF APPLICABLE), UP TO TOWER LEG (IF APPLICABLE), & DISTRIBUTE TO EACH ANTENNA DEVICE. FURNISH AND INSTALL A MINIMUM OF (3) GROUND KITS PER COAXIAL CABLE ACCORDING TO ELECTRICAL DRAWINGS. VERIFY NUMBER OF ANTENNAS, CABLE, & CABLE DIAMETER WITH PROJECT MANAGER.

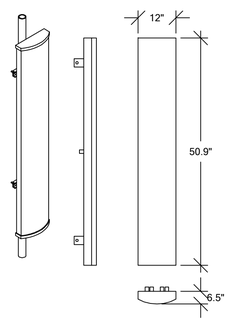

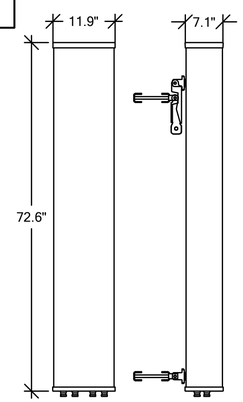

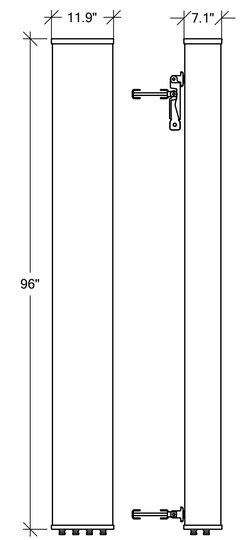

NOTE:

1. ALL COAXIAL CABLE CONNECTIONS TO BE WEATHER PROOFED.
2. CONTRACTOR TO DIP CABLES AND JUMPERS WHERE NECESSARY.
3. TAGGING:
   - ALL COAXIAL CABLES TO BE MARKED WITH COLOR CODED TAPE TO INDICATE THE ANTENNA SECTOR.
   - COLORED ELECTRICAL TAPE SHALL MARK EACH END OF CABLE AND EACH END OFJUMPERS AS CLOSE TO EACH END AS POSSIBLE. (NOT TO INTERFERE WITH WEATHERPROOFING.)
4. COAXIAL CABLE SPECIFICATIONS REQUIRE CABLE SUPPORT EVERY 3'-0" ON CENTER. CONTRACTOR SHALL SUPPLY SUPPORTS AS REQUIRED TO MEET THIS REQUIREMENT.
5. VERTICAL CONNECTIONS SHALL BE TAPED FROM THE BOTTOM UP SO OVERLAP MOVES WATER AWAY FROM CONNECTION. (SEE STEP 4.)
6. PROVIDE HEAT SHRINK IN PLACE OF TAPE FOR QUAD POLES AND TMA'S. HEAT SHRINK SHALL BE "CANUSA" WITH ADHESIVE.

ANDREW ANTENNA DATA

MECHANICAL SPECIFICATIONS				
PART NUMBER	HEIGHT	WIDTH	DEPTH	WEIGHT
TMZXX-6516-A2M	59.6 in (with actuator)	12.0 in	6.5 in	32.2 lbs
CONNECTORS	STANDARD MOUNTING HARDWARE			
(2) 7-16 DIN	INCLUDED			

ELECTRICAL SPECIFICATIONS				
FREQUENCY	POLARIZATION	GAIN	AZIMUTH B.W.	ELEVATION B.W.
1710-2155 MHz	±45°	17.5° ± 0.8	64.5° ± 8	7.2° ± 1.2
	VSWR	MAX INPUT POWER		
	1.35:1 / 16.5	250 WATTS		

COMMSCOPE ANTENNA DATA

MECHANICAL SPECIFICATIONS				
PART NUMBER	HEIGHT	WIDTH	DEPTH	WEIGHT
SBNHH-D65B	72.6 in	11.9 in	7.1 in	40.6 lbs
CONNECTORS	STANDARD MOUNTING HARDWARE			
(6) 7-16 DIN	INCLUDED			

ELECTRICAL SPECIFICATIONS				
FREQUENCY	POLARIZATION	GAIN	AZIMUTH B.W.	
1710-2360 MHz	±45°	17.7-18.6 dBi	64° ± 6°	
	VSWR	MAX INPUT POWER	ELEVATION B.W.	
	<1.4:1	350 WATTS	4.5° - 5.6°	

COMMSCOPE ANTENNA DATA

MECHANICAL SPECIFICATIONS				
PART NUMBER	HEIGHT	WIDTH	DEPTH	WEIGHT
SBNHH-1D65C	96 in	11.9 in	7.1 in	49.6 lbs
CONNECTORS	STANDARD MOUNTING HARDWARE			
(6) 7-16 DIN	INCLUDED			

ELECTRICAL SPECIFICATIONS				
FREQUENCY	POLARIZATION	GAIN	AZIMUTH B.W.	
1710-2360 MHz	±45°	17.7-18.5 dBi	64° ± 6	
	VSWR	MAX INPUT POWER	ELEVATION B.W.	
	<1.5:1	350 WATTS	5.0° ± 0.7°	

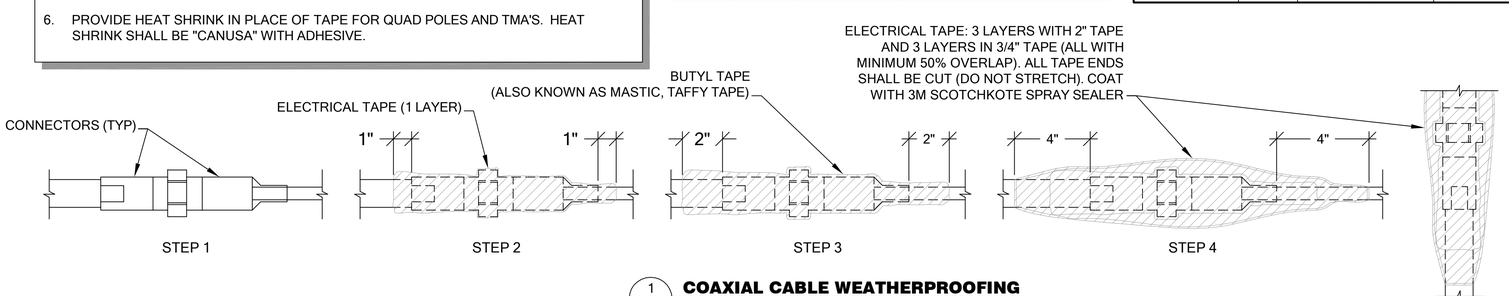

1 / RF-1 **COAXIAL CABLE WEATHERPROOFING**
SCALE: NTS

LANDLORD SIGNATURE: _____

T-Mobile

PROJECT INFORMATION:

GATEWOOD RELO
SE03813A

101 STEWART ST
SEATTLE, WA 98101

ISSUED FOR:

BUILDING PERMIT

REVISION HISTORY:

NO.	DATE:	DESCRIPTION:	CHK. BY:
10	6/29/2016	REV CALLOUTS PER EMAIL COMMENTS	BJT
9	6/22/2016	ADD GAMMA STYLE SHEET & UPDATE GAMMA CALLS	BJT
8	6/24/2016	ADD ROOF COVERAGE SHADOWBOX NOTE	BJT
7	6/13/2016	REVISED PER REDLINES	BJT
6	3/23/2016	ADD LATEST STRUCTURAL SHEETS TO DRAWING SET	BJT
5	3/2/2016	REV LOCATION OF SECTORS TO WITHIN NEW SCREEN	BJT
4	12/28/2015	REV PER STRUCTURAL	BJT
3	12/2/2015	REV PER REDLINES; ADDTIONAL REDLINES	BJT
2	12/1/2015	REV PER REDLINES	BJT
1	11/23/2015	ISSUED DESIGN REVIEW	BJT

PLANS PREPARED BY:

B. J. THOMAS, P.E.
7607 80TH AVE NE
MARYSVILLE, WA 98270
206-851-1106

DRAWN BY: AAL **CHK. BY:** BJ

LICENSURE:

JURISDICTIONAL APPROVAL:

DRAWING TITLE:

RF DETAILS

DRAWING NUMBER:

RF-1

Configuration 702A_RUSh_003 – 2015

(Antenna cabling of one sector shown for clarity)

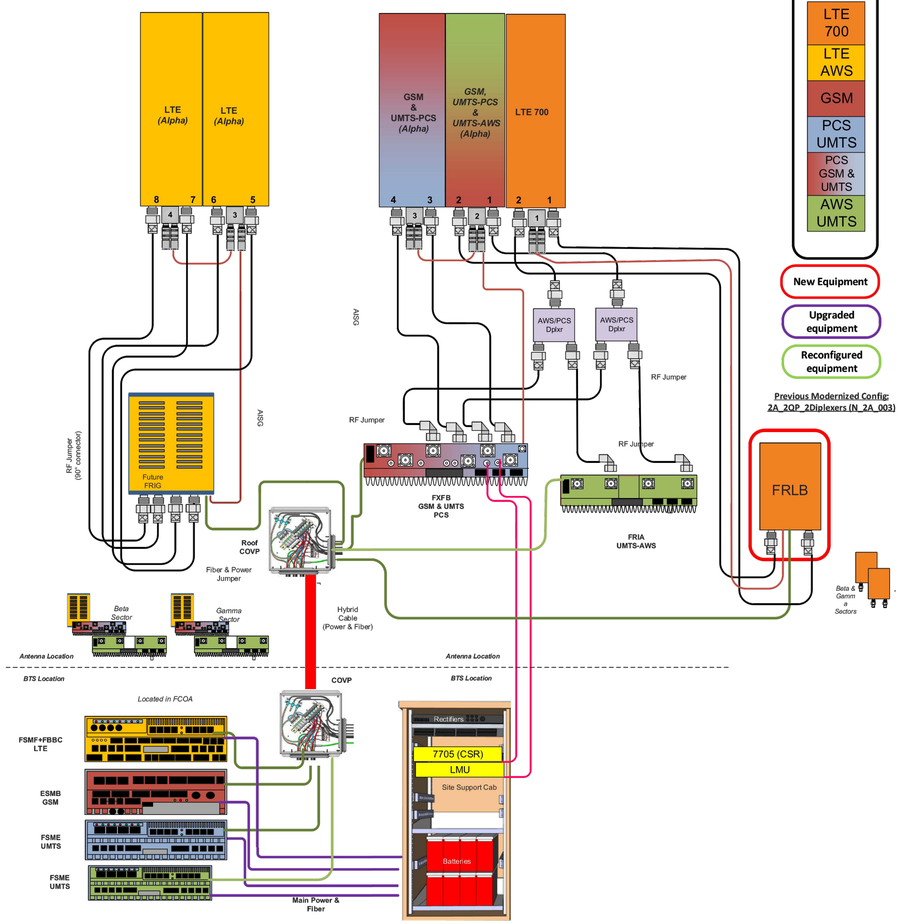

Special Notes:

- This diagram represents a "star" type HCS deployment for rooftops. Depending on sector locations a main HCS with a junction box may be usable between 2 sectors.

ALPHA & BETA SECTOR

NSN Configuration 701A_RUSh_002-2015

FRLB RRU with 1 Tri band Hex Port Antenna – No AWS UMTS

(1 Sector of cabling shown for clarity)

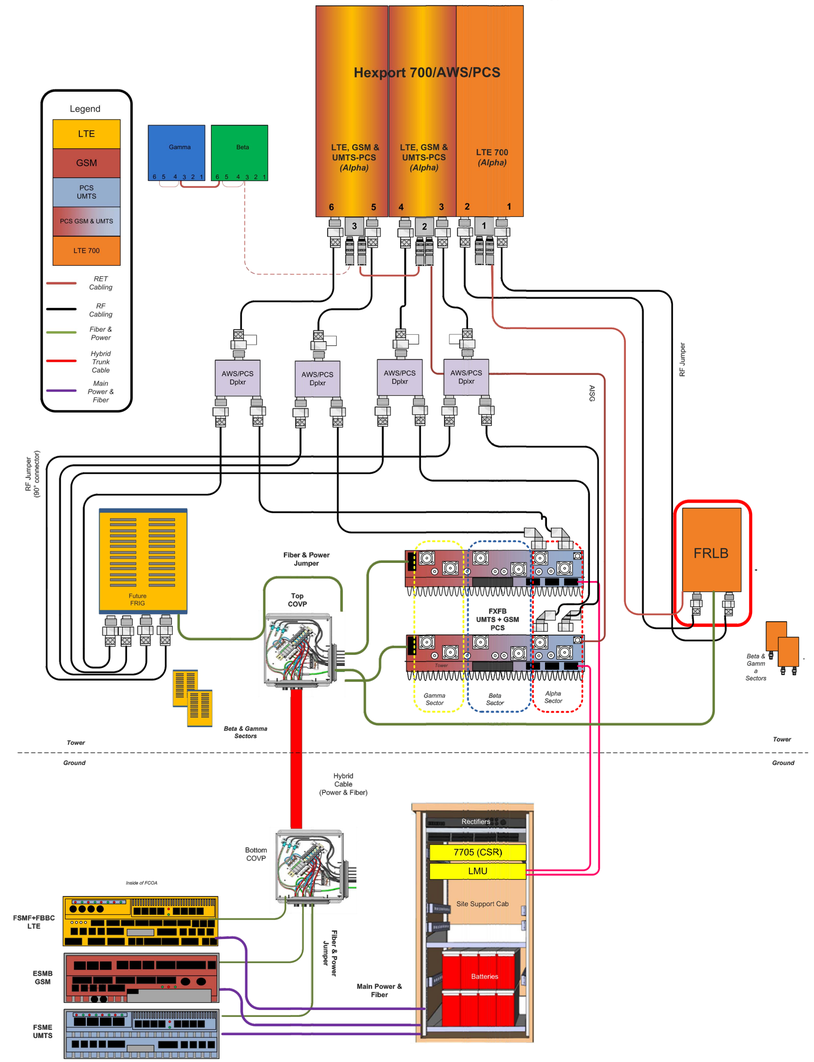

GAMMA SECTOR

LANDLORD SIGNATURE: _____

T-Mobile

PROJECT INFORMATION:

GATEWOOD RELO
SE03813A

101 STEWART ST
SEATTLE, WA 98101

ISSUED FOR:

BUILDING PERMIT

REVISION HISTORY:

NO.	DATE:	DESCRIPTION:	CHK. BY:
10	6/29/2016	REV CALLOUTS PER EMAIL COMMENTS	BJT
9	6/22/2016	ADD GAMMA STYLE SHEET & UPDATE GAMMA CALLS	BJT
8	6/24/2016	ADD ROOF COVERAGE SHADOWBOX NOTE	BJT
7	6/13/2016	REVISED PER REDLINES	BJT
6	3/23/2016	ADD LATEST STRUCTURAL SHEETS TO DRAWING SET	BJT
5	3/2/2016	REV LOCATION OF SECTORS TO WITHIN NEW SCREEN	BJT
4	12/28/2015	REV PER STRUCTURAL	BJT
3	12/2/2015	REV PER REDLINES; ADDTIONAL REDLINES	BJT
2	12/1/2015	REV PER REDLINES	BJT
1	11/23/2015	ISSUED DESIGN REVIEW	BJT

PLANS PREPARED BY:

B. J. THOMAS, P.E.
7607 80TH AVE NE
MARYSVILLE, WA 98270
206-851-1106

DRAWN BY: AAL **CHK. BY:** BJ

LICENSURE:

JURISDICTIONAL APPROVAL:

DRAWING TITLE:

RF DETAILS

DRAWING NUMBER:

RF-2

STRUCTURAL NOTES

(THESE NOTES ARE TYPICAL UNLESS NOTED OR DETAILED OTHERWISE ON DRAWINGS)

CODE

ALL MATERIALS, WORKMANSHIP, DESIGN, AND CONSTRUCTION SHALL CONFORM TO THE DRAWINGS, SPECIFICATIONS, AND THE INTERNATIONAL BUILDING CODE (IBC), 2012 EDITION. SPECIFICATIONS AND STANDARDS WHERE REFERENCED ON THE DRAWINGS ARE TO BE THE LATEST EDITION.

DESIGN LOADS - BUILDING

DEAD LOADS:

MAIN ROOF	55 PSF (GRAVEL)
MAIN ROOF	85 PSF (CONCRETE SLAB)
UPPER ROOF	41 PSF

LIVE LOADS:

ROOF (SNOW LOAD)	25 PSF

(LIVE LOADS ARE REDUCED WHERE PERMISSIBLE PER IBC SECTION 1607.10).

EARTHQUAKE LOADS:

EQUIVALENT LATERAL FORCE PROCEDURE PER ASCE 7-10 SECTION 12.8.

SITE CLASS (ASSUMED)	D
SHORT PERIOD SPECTRAL RESPONSE ACCEL (S_S)	1.361
ONE SECOND SPECTRAL RESPONSE ACCEL (S_1)	0.527
SHORT PERIOD DESIGN SPECTRAL RESPONSE ACCEL (S_{DS})	0.907
ONE SECOND DESIGN SPECTRAL RESPONSE ACCEL (S_{D1})	0.527
RISK CATEGORY	II
SEISMIC IMPORTANCE FACTOR (I_E)	1.0
SEISMIC DESIGN CATEGORY	D
BASIC SEISMIC FORCE-RESISTING-SYSTEM	STEEL SPECIAL MOMENT FRAMES
RESPONSE MODIFICATION FACTOR, (R)	8.0
REDUNDANCY FACTOR (p)	1.0
SEISMIC RESPONSE COEFFICIENT (C_S)	0.043

W = TOTAL SEISMIC DEAD LOAD AS DEFINED PER ASCE 7-10 SECTION 12.7.2.

BASE SHEAR (V), $V = C_S W = \frac{S_{DS}}{R/I} W$

WIND LOADS:

BASIC WIND SPEED (3 SECOND GUST)	110 MPH
EXPOSURE	B
K_{ZT}	1.0

SEE PLANS FOR ADDITIONAL DESIGN LOADS.

DESIGN LOADS - ROOFTOP STRUCTURES

ROOFTOP OTHER STRUCTURES:

EQUIPMENT PLATFORM =	5,600 LBS (W/ CABINETS)
ANTENNA SCREEN =	4,500 LBS (W/ ANTENNAS)

1

WIND LOAD: 110 MPH EXPOSURE C

F =	qz x G x Cf x Af = 35.4 PSF = 21.2 PSF (ASD) [h>60']
qz =	29.74 PSF (Kz = 0.68, Kzt = 1.00, Kd = 0.85)
G =	0.85 (RIGID STRUCTURE) [h>60']
Cf =	1.4 [h>60']
RISK CATEGORY	II

SEISMIC LOAD: SEISMIC DESIGN CATEGORY D, SOIL TYPE Sd

Fp =	$\frac{0.4apSdsIp}{Rp}$ [1+2z/h] Wp = 0.319 Wp (ASD)
ap =	1.0 (WIRELESS EQUIPMENT)
Rp =	2.5 (WIRELESS EQUIPMENT)
Sds =	(Ss = 1.553 & Fa = 1.0 BASED ON LAT/LONG)
Ip =	1.0 (COMM EQUIPMENT)
z/h =	1.0

STATEMENT OF SPECIAL INSPECTIONS

SPECIAL INSPECTIONS ARE REQUIRED AS INDICATED IN THE FOLLOWING TABLE. THE CONTRACTOR SHALL SUBMIT A WRITTEN STATEMENT OF RESPONSIBILITY TO THE BUILDING OFFICIAL AND OWNER PRIOR TO COMMENCEMENT OF WORK IN ACCORDANCE WITH CHAPTER 1704.4 OF THE IBC.

STEEL CONSTRUCTION - SPECIAL INSPECTION IS REQUIRED IN CONFORMANCE WITH IBC SECTION 1705.2 AND 1705.11.1.

STRUCTURAL OBSERVATION OF THE STRUCTURAL SYSTEM BY THE ENGINEER IS NOT REQUIRED.

FREQUENCY AND DISTRIBUTION OF REPORTS - INSPECTION REPORTS SHALL BE PROVIDED FOR EACH DAY ON SITE BY SPECIAL INSPECTOR. STRUCTURAL OBSERVATION REPORTS SHALL BE PROVIDED AFTER EACH OBSERVATION. REPORTS SHALL BE DISTRIBUTED TO THE CONTRACTOR, ARCHITECT, ENGINEER AND BUILDING OFFICIAL.

SPECIAL INSPECTION

OPERATION	CONT	PERIODIC	REMARKS
CONCRETE			
EXPANSION ANCHORS		X	IF REQ'D
STRUCTURAL STEEL			
FABRICATION & ERECTION		X	
HIGH STRENGTH BOLTING		X	
SHOP & FIELD WELDING			
SINGLE PASS FILLET WELDS ≤ 5/16"		X	

NOTE:
ALL ITEMS MARKED WITH AN "X" SHALL BE INSPECTED IN ACCORDANCE WITH IBC CHAPTER 17. SPECIAL INSPECTION SHALL BE PERFORMED BY A QUALIFIED TESTING AGENCY DESIGNATED BY THE OWNER. THE ARCHITECT, STRUCTURAL ENGINEER, AND BUILDING OFFICIAL SHALL BE FURNISHED WITH COPIES OF ALL RESULTS. ANY INSPECTION FAILING TO MEET THE PROJECT SPECIFICATIONS SHALL BE IMMEDIATELY BROUGHT TO THE ATTENTION OF THE DESIGN TEAM.

SHOP DRAWINGS

SHOP DRAWINGS FOR THE FOLLOWING ITEMS SHALL BE SUBMITTED TO THE ARCHITECT AND STRUCTURAL ENGINEER FOR REVIEW PRIOR TO FABRICATION:

1. STRUCTURAL STEEL 2. STEEL GRATING 3. FRP SCREENWALLS 1

SHOP DRAWINGS SHALL BE REVIEWED, REVISED AS REQUIRED FOR FIELD CONDITIONS, AND DATE STAMPED BY THE CONTRACTOR PRIOR TO REVIEW BY THE ENGINEER. CONTRACTOR SHALL PROVIDE (3) SETS OF SHOP DRAWINGS FOR ENGINEER'S REVIEW. ALLOW TWO WEEKS FOR SHOP DRAWING APPROVAL BY ENGINEER.

ENGINEER'S SHOP DRAWING REVIEW IS FOR GENERAL CONFORMANCE WITH THE DESIGN CONCEPT AND CONTRACT DOCUMENTS. MARKINGS OR COMMENTS SHALL NOT BE CONSTRUED AS RELIEVING THE CONTRACTOR FROM COMPLIANCE WITH THE PROJECT PLANS AND SPECIFICATIONS. THE CONTRACTOR REMAINS RESPONSIBLE FOR DETAILS AND ACCURACY, FOR CONFORMING AND CORRELATING ALL QUANTITIES AND DIMENSIONS, FOR SELECTING FABRICATION PROCESSES, FOR TECHNIQUES OF ASSEMBLY, AND FOR PERFORMING THE WORK IN A SAFE MANNER.

ENGINEER'S SHOP DRAWING REVIEW OF STRUCTURAL COMPONENTS DESIGNED BY OTHERS IS FOR LOADS IMPOSED ON THE BASIC STRUCTURE. THE COMPONENT DESIGNER IS RESPONSIBLE FOR CODE CONFORMANCE AND ALL CONNECTIONS TO THE BASIC STRUCTURE. SHOP DRAWINGS SHALL INDICATE MAGNITUDE AND DIRECTION OF THE LOADS IMPOSED ON THE BASIC STRUCTURE AND SHALL BE STAMPED & SIGNED BY A PROFESSIONAL ENGINEER REGISTERED IN THE SAME STATE AS THE PROJECT.

1 FABRICATION SHALL BEGIN ONLY AFTER SHOP DRAWINGS BEARING THE STAMP AND SIGNATURE OF THE PROJECT ARCHITECT, ENGINEER OF RECORD, AND CONTRACTOR HAVE BEEN RECEIVED.

DEFERRED APPROVAL ITEMS

SUBMITTAL DOCUMENTS FOR DEFERRED SUBMITTAL ITEMS SHALL BE SUBMITTED TO THE ARCHITECT OR ENGINEER OF RECORD WHO SHALL REVIEW THEM AND INDICATE THAT THE DEFERRED SUBMITTAL DOCUMENTS HAVE BEEN REVIEWED AND THAT THEY HAVE BEEN FOUND TO BE IN GENERAL CONFORMANCE WITH THE DESIGN OF THE BUILDING. THE DEFERRED SUBMITTAL ITEMS SHALL NOT BE INSTALLED UNTIL THEIR DESIGN AND SUBMITTAL DOCUMENTS HAVE BEEN APPROVED BY THE BUILDING OFFICIAL.

1. FRP SCREEN WALLS

STRUCTURAL STEEL

STRUCTURAL STEEL DESIGN, FABRICATION AND ERECTION SHALL BE IN ACCORDANCE WITH THE AISC "SPECIFICATION FOR THE DESIGN, FABRICATION, AND ERECTION OF STRUCTURAL STEEL FOR BUILDINGS", LATEST EDITION.

SHAPES SHALL CONFORM TO ASTM A992, Fy = 50 KSI.

PLATES, ANGLES, AND RODS SHALL CONFORM TO ASTM A36, Fy = 36 KSI.

STRUCTURAL TUBING SHALL CONFORM TO ASTM A500 GRADE B, Fy = 46 KSI.

STEEL PIPE SHALL CONFORM TO ASTM A53 GRADE B, Fy = 35 KSI.

BOLTS CONNECTING STEEL MEMBERS SHALL CONFORM TO ASTM A325-N. BOLTS SHALL BE 3/4"Ø MINIMUM, UNO ANCHOR BOLTS SHALL CONFORM TO ASTM A307.

CONTRACTOR SHALL PROVIDE CONNECTION ADJUSTMENT TOLERANCES TO SATISFY THE REQUIREMENTS OF AISC MANUAL OF STEEL CONSTRUCTION.

UNLESS SPECIFIED AS STAINLESS STEEL, ALL STEEL MEMBERS, SHAPES, BOLTS, AND ACCESSORIES EXPOSED TO WEATHER SHALL BE HOT DIP GALVANIZED.

WELDING

WELDING SHALL CONFORM TO AWS "STRUCTURAL WELDING CODE", LATEST EDITION. ALL WELDING SHALL BE DONE WITH 70 KSI LOW HYDROGEN ELECTRODES. WHERE NOT CALLED OUT, MINIMUM FILLET WELD SIZE SHALL BE PER TABLE 5.8 IN AWS D1.1, LATEST EDITION.

1 ALL WELDING SHALL BE DONE BY WASHINGTON ASSOCIATION OF BUILDING OFFICIALS (WABO) CERTIFIED WELDERS.

FIBER REINFORCED POLYMER (FRP) SHAPES AND FASTENERS

ALL FRP STRUCTURAL SHAPES SHALL BE 1525 SERIES PULTEX STANDARD PROFILES BY CREATIVE PULTRUSIONS, INC.

BOLTS AND NUTS SHALL BE SUPERSTUD FIBER REINFORCED POLYMER FASTENER SYSTEM BY CREATIVE PULTRUSIONS, INC.

FIBER REINFORCED POLYMER PRODUCTS SHALL BE DESIGNED AND PROVIDED BY HI-TECH COMPOSITE STRUCTURES OR ENGINEER-APPROVED EQUIVALENT MANUFACTURER. SHOP DRAWINGS ARE REQUIRED PER THE STRUCTURAL NOTES AND SHALL BE DESIGNED AND STAMPED BY THE MANUFACTURER'S PROFESSIONAL ENGINEER LICENSED IN THE SAME STATE AS THE PROJECT. REFER TO THE DESIGN LOADS SECTION OF THE STRUCTURAL NOTES FOR MAXIMUM WEIGHT OF SCREENWALL AS WELL AS LATERAL FORCE REQUIREMENTS.

STEEL GRATING

PROVIDE GALVANIZED STEEL FLOOR GRATING BY GRATING PACIFIC OR APPROVED EQUAL. BAND ALL GRATING EDGES.

TYPE OF GRATING: W-19-4
SIZE OF BEARING BARS: 1 1/2" x 1/8" @ 1 3/16" OC
MAX SPAN: 7'-0"

MANUFACTURER/SUPPLIER TO PROVIDE CONNECTION OF GRATING TO STRUCTURAL STEEL WITH "G" CLIPS. SUBMIT SHOP DRAWINGS FOR APPROVAL. PROVIDE MIN. OF (1) "G" CLIP CONNECTOR BETWEEN GRATING & STRUCTURAL STEEL ADJACENT TO EACH LOCATION WHERE EQUIPMENT IS ATTACHED TO THE GRATING.

MOUNT EQUIPMENT TO GRATING USING GM SERIES CLIPS WITH 1/2"Ø THREADED STUDS MANUFACTURED BY G-CLIPS GRATING FASTENERS.

EXISTING BUILDING

CONTRACTOR SHALL VERIFY ALL DIMENSIONS, MEMBER SIZES AND CONDITIONS OF THE EXISTING BUILDING DEPICTED IN THE DRAWINGS, AND NOTIFY THE STRUCTURAL ENGINEER OF ANY DISCREPANCIES FOR POSSIBLE REDESIGN.

GENERAL

STRUCTURAL DRAWINGS SHALL BE USED IN CONJUNCTION WITH ARCHITECTURAL, CIVIL, ELECTRICAL, AND MECHANICAL DRAWINGS FOR BIDDING AND CONSTRUCTION. CONTRACTOR SHALL VERIFY ALL DIMENSIONS AND CONDITIONS FOR COMPATIBILITY BEFORE PROCEEDING. ANY DISCREPANCIES SHALL BE BROUGHT TO THE ATTENTION OF THE ARCHITECT BEFORE PROCEEDING.

CONTRACTOR TO SEE ARCHITECTURAL, CIVIL, ELECTRICAL AND MECHANICAL DRAWINGS FOR SIZE AND LOCATION OF PIPE, VENT, DUCT AND OTHER OPENINGS AND DETAILS NOT SHOWN ON THESE DRAWINGS.

CONTRACTOR SHALL BE RESPONSIBLE FOR ERECTION STABILITY AND TEMPORARY SHORING AS NECESSARY UNTIL PERMANENT SUPPORT AND STIFFENING ARE INSTALLED.

CONTRACTOR-INITIATED CHANGES SHALL BE SUBMITTED IN WRITING TO THE ARCHITECT AND STRUCTURAL ENGINEER FOR APPROVAL PRIOR TO FABRICATION OR CONSTRUCTION. CHANGES SHOWN ON SHOP DRAWINGS ONLY WILL NOT SATISFY THIS REQUIREMENT.

DRAWINGS INDICATE GENERAL AND TYPICAL DETAILS OF CONSTRUCTION. WHERE CONDITIONS ARE NOT SPECIFICALLY INDICATED BUT ARE OF A SIMILAR CHARACTER TO DETAILS SHOWN, SIMILAR DETAILS OF CONSTRUCTION SHALL BE USED, SUBJECT TO REVIEW AND APPROVAL BY THE ARCHITECT AND THE STRUCTURAL ENGINEER.

PLAN NOTES:
1. THE CONTRACTOR SHALL VERIFY ALL DIMENSIONS AND FRAMING SHOWN FOR COMPATIBILITY TO THE DRAWINGS PRIOR TO FABRICATION AND CONSTRUCTION. NOTIFY THE ENGINEER OF ANY DISCREPANCIES FOR POSSIBLE REDESIGN.
2. CONTRACTOR RESPONSIBLE FOR COMPLETELY SEALING ALL AREAS WHERE EXISTING ROOF MATERIAL IS PENETRATED OR REMOVED. PROVIDE WATER PROOFING AS REQUIRED BY THE ARCH.
3. ALL EXTERIOR STEEL SHALL BE HOT DIP GALV.

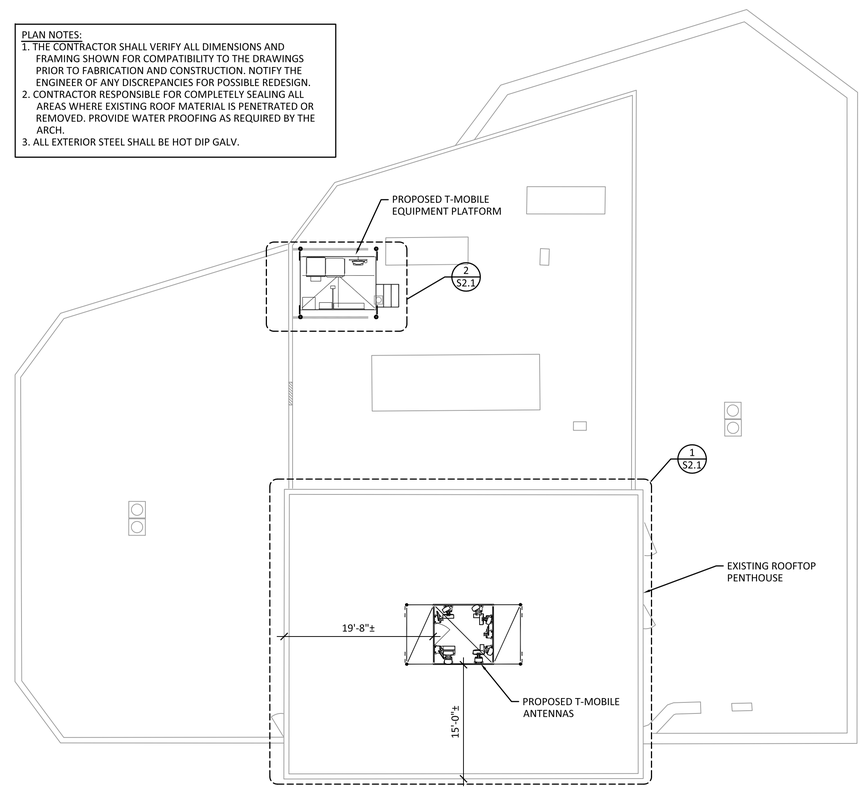

1 **1 OVERALL ROOF PLAN**
SCALE: 1" = 10'

10 0 5 10 20

T-Mobile

PROJECT INFORMATION:

GATEWOOD RELO
SE033813A
101 STEWART ST
SEATTLE, WA 98101

ISSUED FOR:

PERMIT

REVISION HISTORY:

NO.	DATE:	DESCRIPTION:	CHK. BY:
1	03/22/16	ANTENNA SCREEN REVISIONS	DTR
0	12/28/15	PERMIT SUBMITTAL	CGP

PLANS PREPARED BY:

C G ENGINEERING
250 4TH AVE. S., SUITE 200
EDMONDS, WASHINGTON 98020
PHONE (425) 778-8500
FAX (425) 778-5536

DRAWN BY: JCS **CHK. BY:** JGG

LICENSURE:

C. CHEVY CHASE, STATE OF WASHINGTON, REGISTERED PROFESSIONAL ENGINEER

03/22/16

JURISDICTIONAL APPROVAL:

DRAWING TITLE:

STRUCTURAL NOTES

DRAWING NUMBER:

S1.1

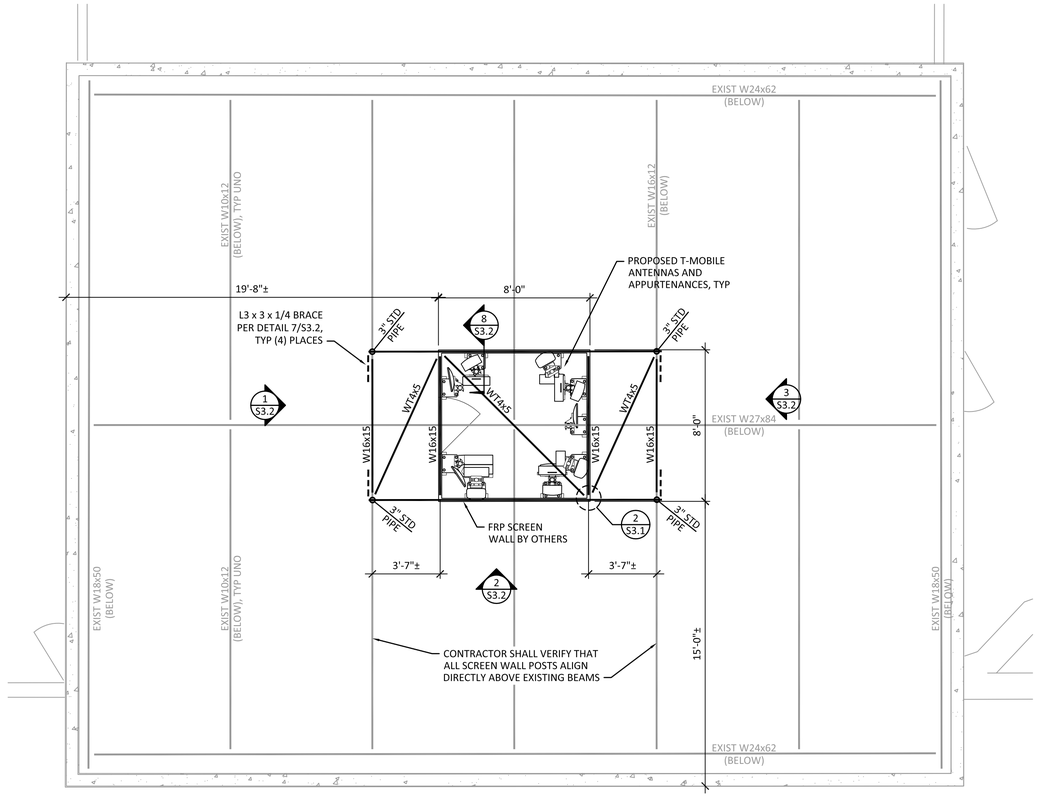

1 PARTIAL PENHOUSE ROOF FRAMING PLAN
SCALE: 1/4" = 1'-0"

2'-0" 0 2'-0" 4'-0"

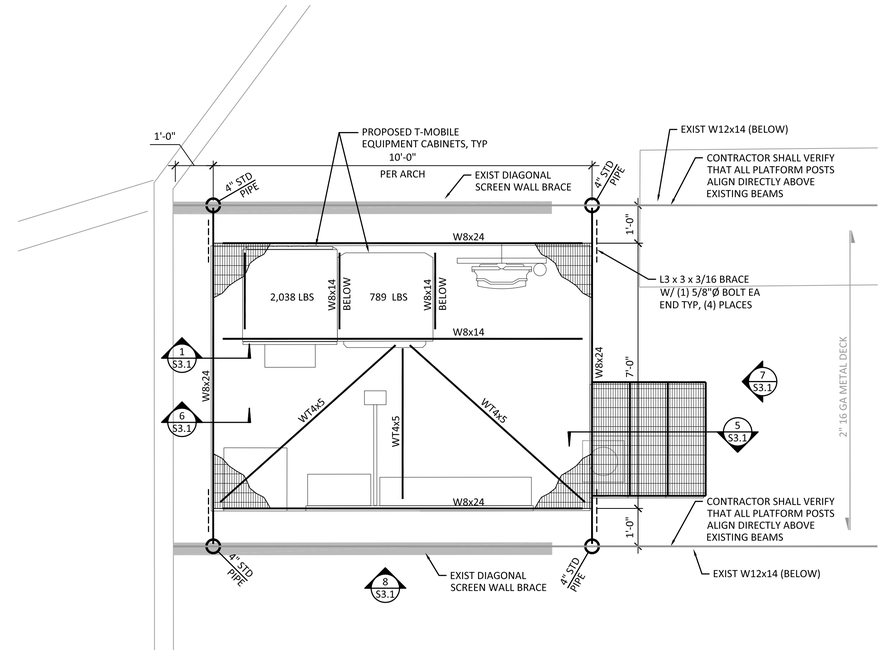

2 EQUIPMENT PLATFORM FRAMING PLAN
SCALE: 1/2" = 1'-0"

1'-0" 0 2'-0" 4'-0"

T-Mobile

PROJECT INFORMATION:

GATEWOOD RELO
SE033813A
101 STEWART ST
SEATTLE, WA 98101

ISSUED FOR:

PERMIT

REVISION HISTORY:

NO.	DATE:	DESCRIPTION:	CHK. BY:
1	03/22/16	ANTENNA SCREEN REVISIONS	DTR
0	12/28/15	PERMIT SUBMITTAL	CGP

PLANS PREPARED BY:

CG ENGINEERING
250 4TH AVE. S., SUITE 200
EDMONDS, WASHINGTON 98020
PHONE (425) 778-8500
FAX (425) 778-5536

DRAWN BY: JCS
CHK. BY: JGG

LICENSURE:

C. CHEVY CHASE
STATE OF WASHINGTON
40372
REGISTERED PROFESSIONAL ENGINEER
05/22/16

JURISDICTIONAL APPROVAL:

DRAWING TITLE:

FRAMING PLANS

DRAWING NUMBER:

S2.1

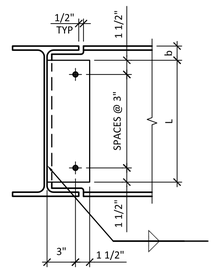

BEAM TO BEAM

BEAM SIZE	NO OF BOLTS	PL LENGTH (L)	PL THICKNESS	WELD SIZE	DIM (b)
W6	(2) 5/8"Ø	4 1/2"	5/16"	3/16"	3/4"
W8	(2) 3/4"Ø	6"	5/16"	1/4"	1"

NOTES:
1. ALL BOLTS SHALL BE A325N, TYP UNO BOLT HOLES SHALL BE STANDARD SIZE, TYP UNO.
2. BOLT INSTALLATION SHALL BE PER AISC SPECIFICATIONS, LATEST EDITION.

1

1 TYP SINGLE PLATE SHEAR CONNECTION
SCALE: NTS

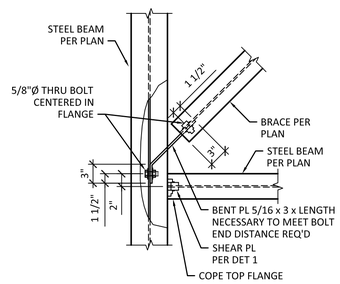

2 TYP BRACE CONN
SCALE: 1" = 1'-0"

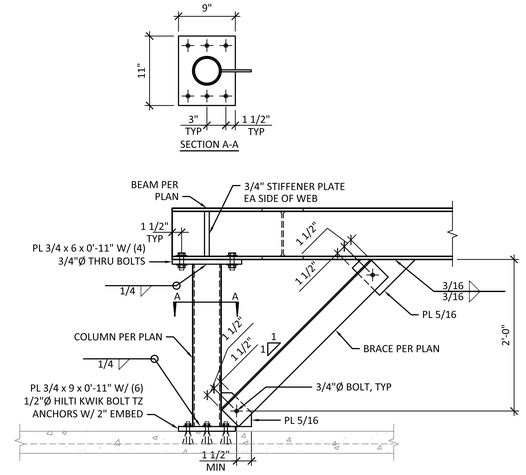

3 SECTION
SCALE: 1" = 1'-0"

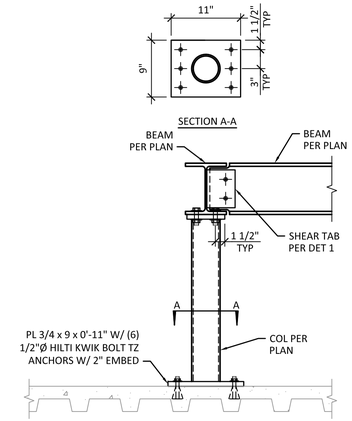

4 SUPPORT COLUMN SECTION
SCALE: 1" = 1'-0"

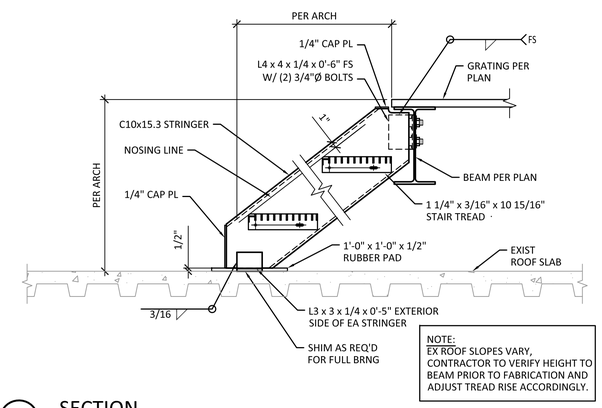

NOTE:
EX ROOF SLOPES VARY, CONTRACTOR TO VERIFY HEIGHT TO BEAM PRIOR TO FABRICATION AND ADJUST TREAD RISE ACCORDINGLY.

5 SECTION
SCALE: 1" = 1'-0"

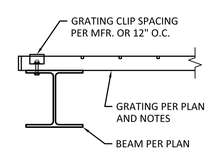

6 SECTION
SCALE: 1 1/2" = 1'-0"

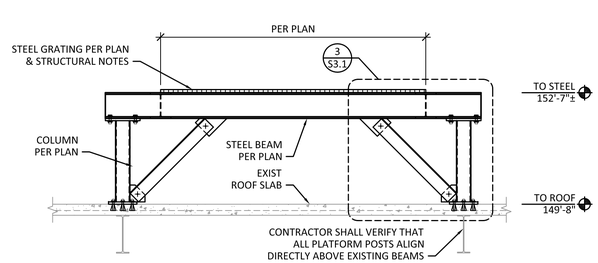

7 EQUIPMENT PLATFORM
SCALE: 1/2" = 1'-0"

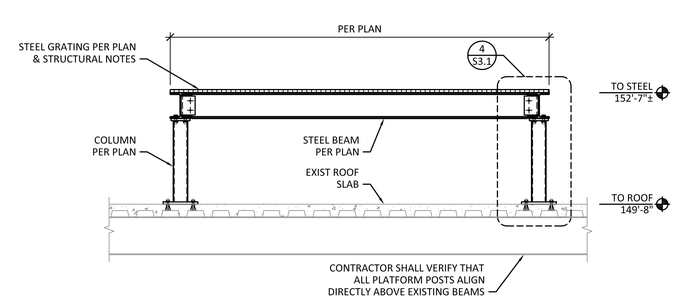

8 EQUIPMENT PLATFORM
SCALE: 1/2" = 1'-0"

T-Mobile

PROJECT INFORMATION:

GATEWOOD RELO
SE033813A
101 STEWART ST
SEATTLE, WA 98101

ISSUED FOR:

PERMIT

REVISION HISTORY:

NO.	DATE:	DESCRIPTION:	CHK. BY:
1	03/22/16	ANTENNA SCREEN REVISIONS	DTR
0	12/28/15	PERMIT SUBMITTAL	CGP

PLANS PREPARED BY:

C.G. ENGINEERING
250 4TH AVE. S., SUITE 200
EDMONDS, WASHINGTON 98020
PHONE (425) 778-8500
FAX (425) 778-5536

DRAWN BY: JCS
CHK. BY: JGG

LICENSURE:

CHEVY CHASE — STATE OF WASHINGTON — 23272 — REGISTERED PROFESSIONAL ENGINEER
05/22/16

JURISDICTIONAL APPROVAL:

DRAWING TITLE:

FRAMING DETAILS

DRAWING NUMBER:

S3.1

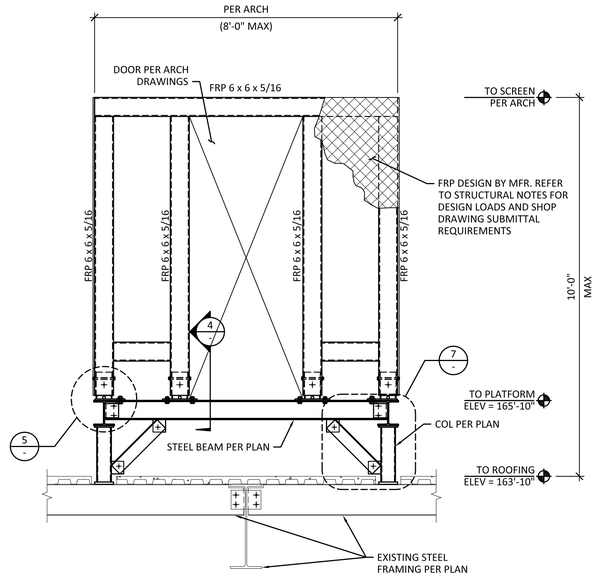

1 TYPICAL SCREEN WALL ELEVATION
SCALE: 1/2" = 1'-0"

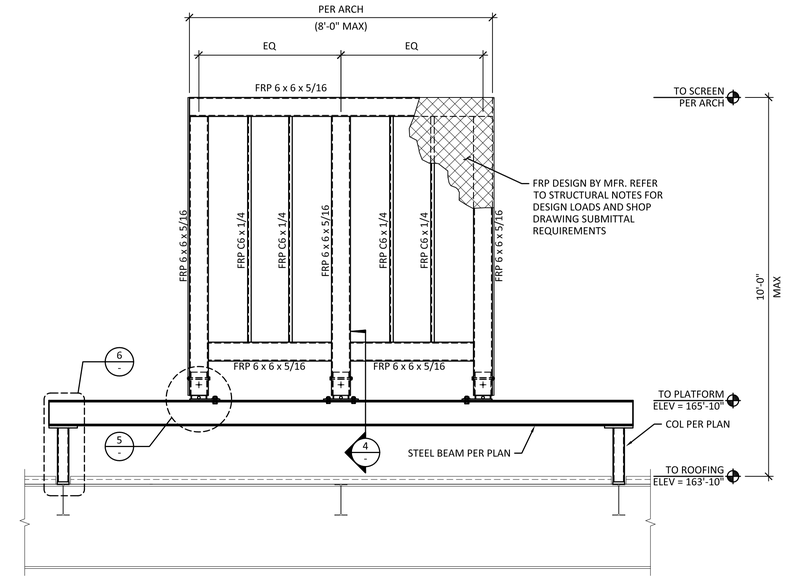

2 TYPICAL SCREEN WALL ELEVATION
SCALE: 1/2" = 1'-0"

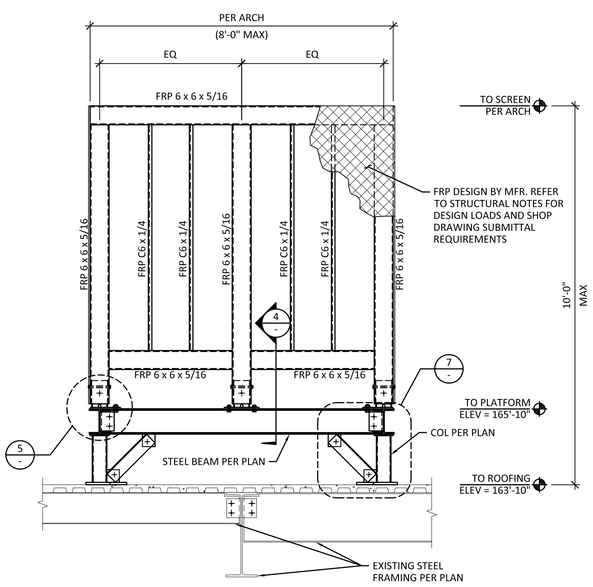

3 TYPICAL SCREEN WALL ELEVATION
SCALE: 1/2" = 1'-0"

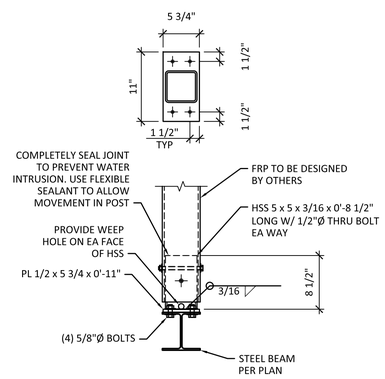

4 SECTION
SCALE: 1" = 1'-0"

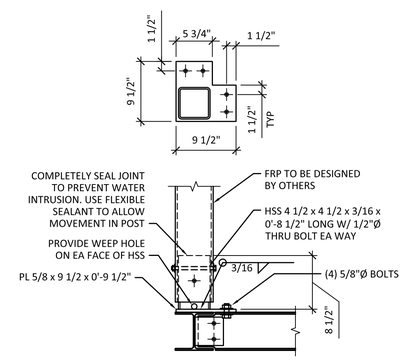

5 SECTION
SCALE: 1" = 1'-0"

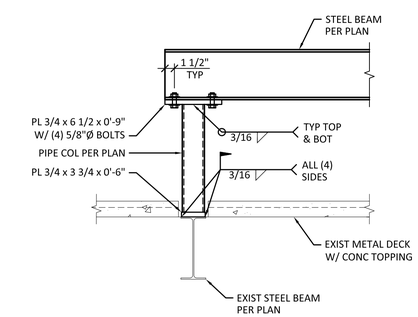

6 SECTION
SCALE: 1" = 1'-0"

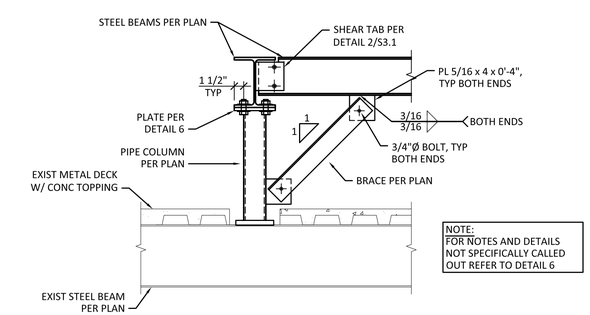

NOTE:
FOR NOTES AND DETAILS NOT SPECIFICALLY CALLED OUT REFER TO DETAIL 6

7 SECTION
SCALE: 1" = 1'-0"

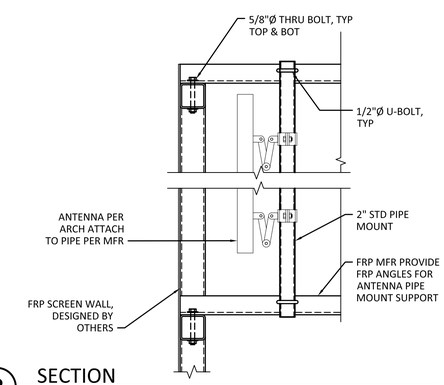

8 SECTION
SCALE: 1" = 1'-0"

T-Mobile

PROJECT INFORMATION:

GATEWOOD RELO
SE033813A
101 STEWART ST
SEATTLE, WA 98101

ISSUED FOR:

PERMIT

REVISION HISTORY:

NO.	DATE:	DESCRIPTION:	CHK. BY:
1	03/22/16	ANTENNA SCREEN REVISIONS	DTR
0	12/28/15	PERMIT SUBMITTAL	CGP

PLANS PREPARED BY:

CG ENGINEERING
250 4TH AVE. S., SUITE 200
EDMONDS, WASHINGTON 98020
PHONE (425) 778-8500
FAX (425) 778-5536

DRAWN BY: JCS
CHK. BY: JGG

LICENSURE:

C. CHEVY CHASE — STATE OF WASHINGTON — 23725 — REGISTERED PROFESSIONAL ENGINEER
03/22/16

JURISDICTIONAL APPROVAL:

DRAWING TITLE:

SCREENWALL ELEVATIONS AND DETAILS

DRAWING NUMBER:

1 **S3.2**

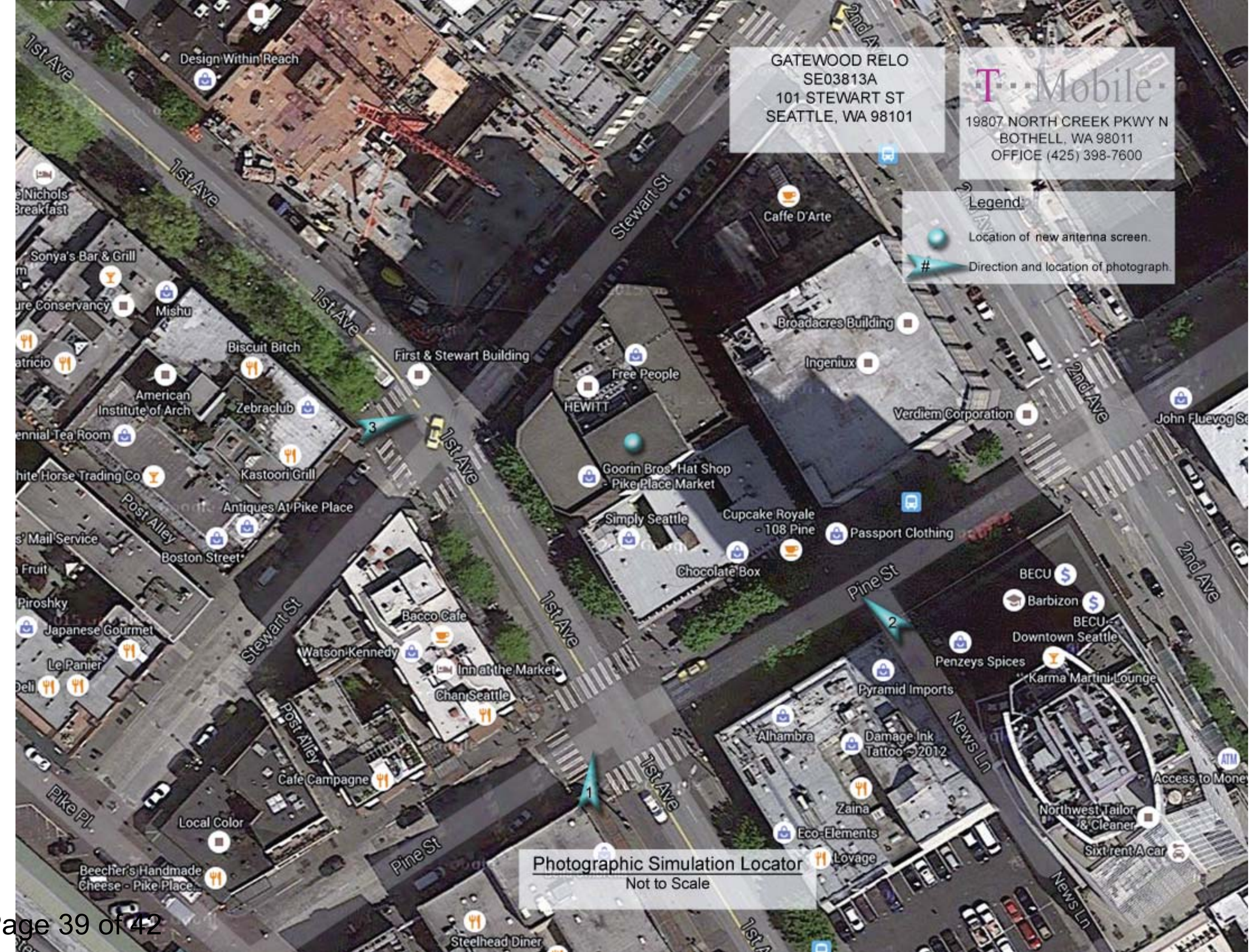
GATEWOOD RELO
SE03813A
101 STEWART ST
SEATTLE, WA 98101
T · Mobile
19807 NORTH CREEK PKWY N
BOTHELL, WA 98011
OFFICE (425) 398-7600
Legend:
Location of new antenna screen.
Direction and location of photograph.
Photographic Simulation Locator
Not to Scale
1st Ave
2nd Ave
Stewart St
Pine St
Post Alley
Pike Pl
News Ln
Design Within Reach
Caffe D'Arte
Sonya's Bar & Grill
Mishu
Biscuit Bitch
First & Stewart Building
Free People
HEWITT
Broadacres Building
Ingeniux
Verdiem Corporation
American Institute of Arch
Zebraclub
Kastoori Grill
Antiques At Pike Place
Boston Street
Goorin Bros. Hat Shop - Pike Place Market
Simply Seattle
Cupcake Royale - 108 Pine
Passport Clothing
Chocolate Box
Piroshky
Japanese Gourmet
Le Panier
Bacco Cafe
Watson Kennedy
Inn at the Market
Chan Seattle
Cafe Campagne
Local Color
Beecher's Handmade Cheese - Pike Place
Steelhead Diner
BECU
Barbizon
BECU Downtown Seattle
Penzeys Spices
Karma Martini Lounge
Pyramid Imports
Alhambra
Damage Ink Tattoo - 2012
Zaina
Eco-Elements
Lovage
Northwest Tailor & Cleaner
Sixt rent A car
Access to Money

GATEWOOD RELO
SE03813A
101 STEWART ST
SEATTLE, WA 98101

EXISTING/PROPOSED
PHOTO #1

T··Mobile·

19807 NORTH CREEK PKWY N
BOTHELL, WA 98011
OFFICE (425) 398-7600

FROM 1ST AVE & PINE ST LOOKING NORTH
(NEW SCREEN NOT VISIBLE THIS VIEW)

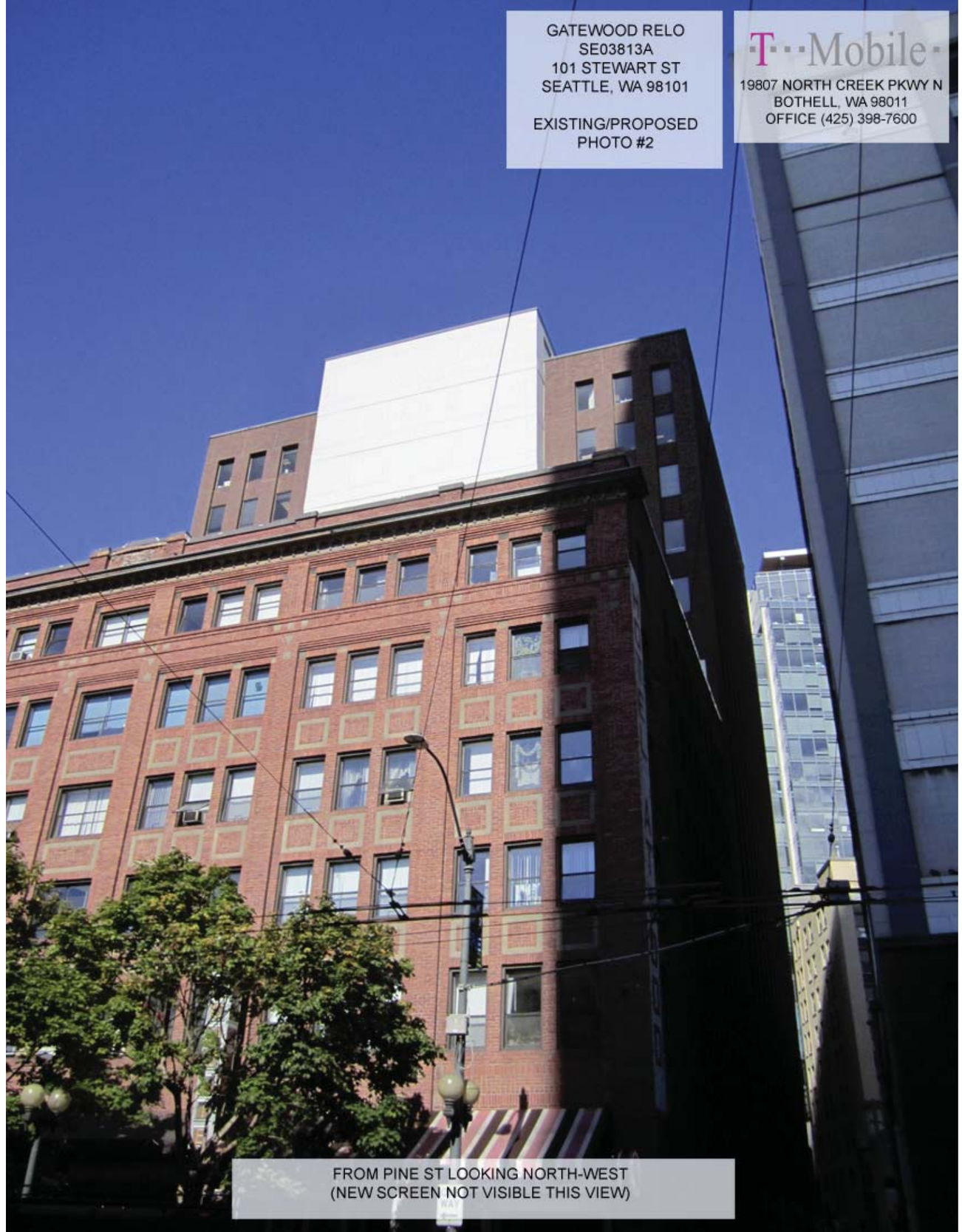
GATEWOOD RELO
SE03813A
101 STEWART ST
SEATTLE, WA 98101
EXISTING/PROPOSED
PHOTO #2
T··Mobile·
19807 NORTH CREEK PKWY N
BOTHELL, WA 98011
OFFICE (425) 398-7600
FROM PINE ST LOOKING NORTH-WEST
(NEW SCREEN NOT VISIBLE THIS VIEW)

GATEWOOD RELO
SE03813A
101 STEWART ST
SEATTLE, WA 98101
EXISTING/PROPOSED
PHOTO #3
T··Mobile·
19807 NORTH CREEK PKWY N
BOTHELL, WA 98011
OFFICE (425) 398-7600
FROM 1ST AVE & STEWART ST LOOKING EAST
(NEW SCREEN NOT VISIBLE THIS VIEW)