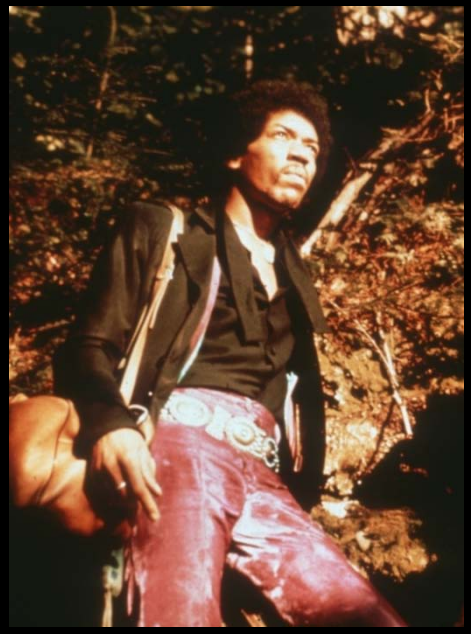

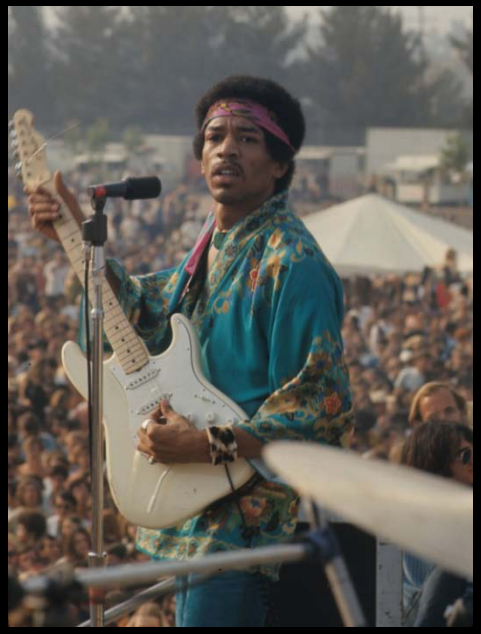

JIMI HENDRIX PARK

SEATTLE DESIGN COMMISSION PRESENTATION

OCTOBER 3, 2013

LOCAL CONTEXT MAP

0' 100' 500'

NORTH

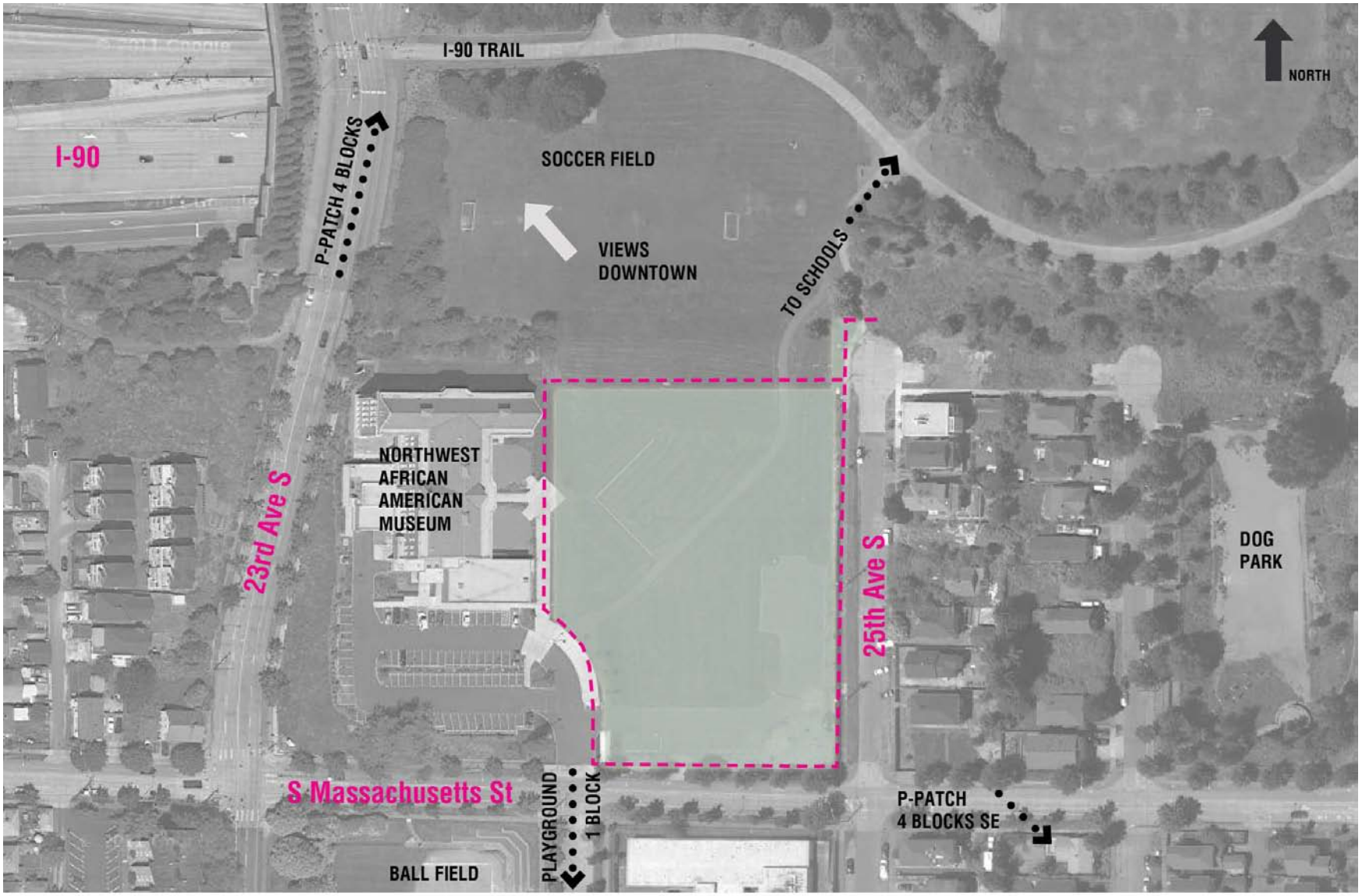
I-90 TRAIL
NORTH
I-90
P-PATCH 4 BLOCKS
SOCCER FIELD
VIEWS
DOWNTOWN
TO SCHOOLS
NORTHWEST
AFRICAN
AMERICAN
MUSEUM
23rd Ave S
25th Ave S
DOG
PARK
S Massachusetts St
PLAYGROUND
1 BLOCK
P-PATCH
4 BLOCKS SE
BALL FIELD

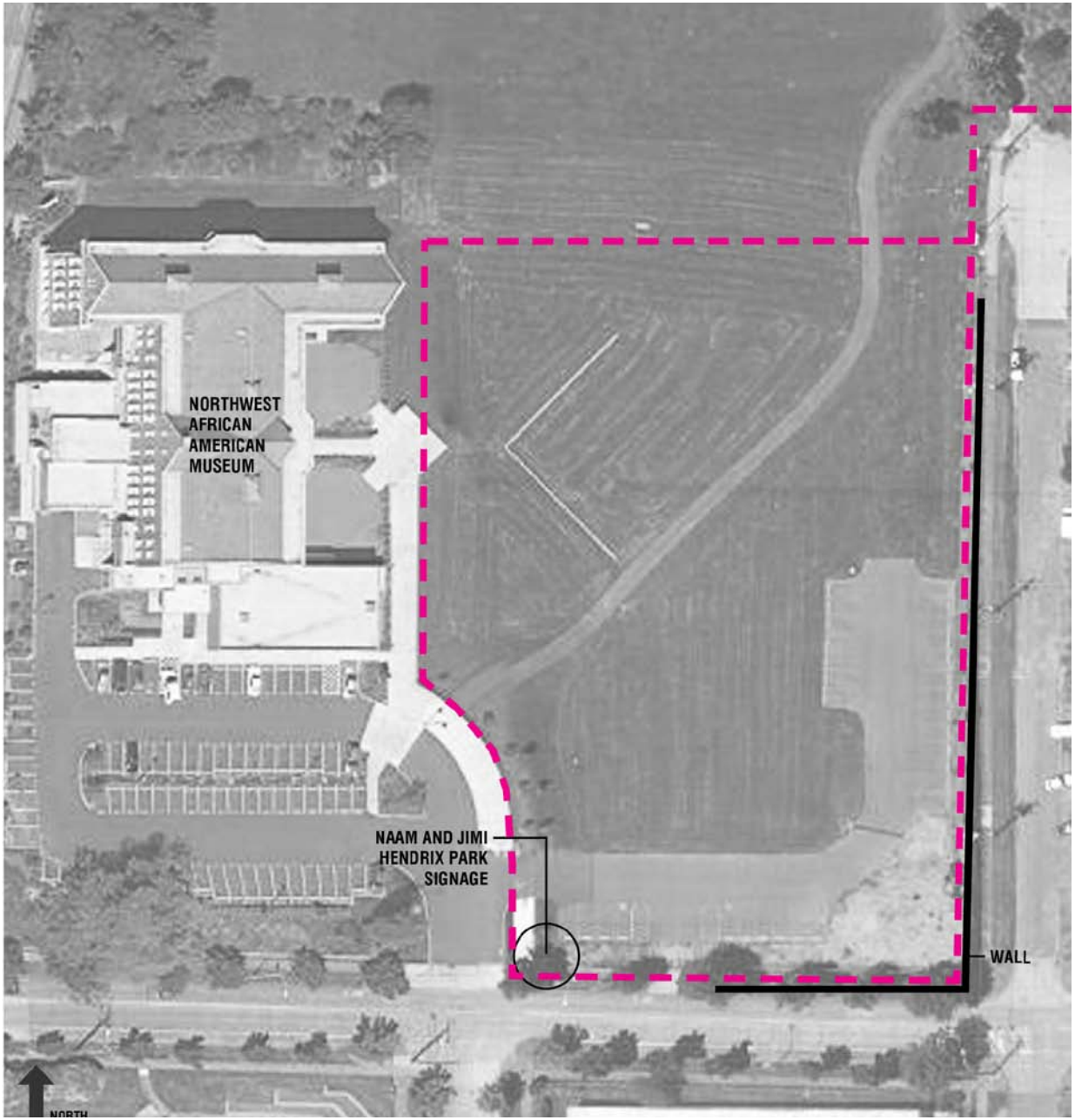
NORTHWEST
AFRICAN
AMERICAN
MUSEUM
NAAM AND JIMI
HENDRIX PARK
SIGNAGE
WALL
NORTH

VIEW OF PARK FROM SOUTH (EXISTING PARKING LOT)

VIEW OF PARK FROM SOUTHEAST (MT. BAKER NEIGHBORHOOD)

NORTHWEST AFRICAN AMERICAN MUSEUM ENTRANCE

PATH LOOKING NORTHEAST TO I-90 TRAIL

PATH LOOKING SOUTHWEST

VIEW TO SOUTHEAST FROM NAAM ROOF

RETAINING WALL INHIBITS ACCESS FROM SOUTHEAST

VIEW TO MOUNT RAINIER

JIMI HENDRIX PARK

JIMI HENDRIX DRAWING INSPIRATION

JIMI HENDRIX INSPIRATION

- **Phasing**
- **Literal vs. Abstract**
- **Entries**
- **Retaining wall/stairs**
- **Detail**
- **ADA**
- **CPTED**

JIMI HENDRIX PARK

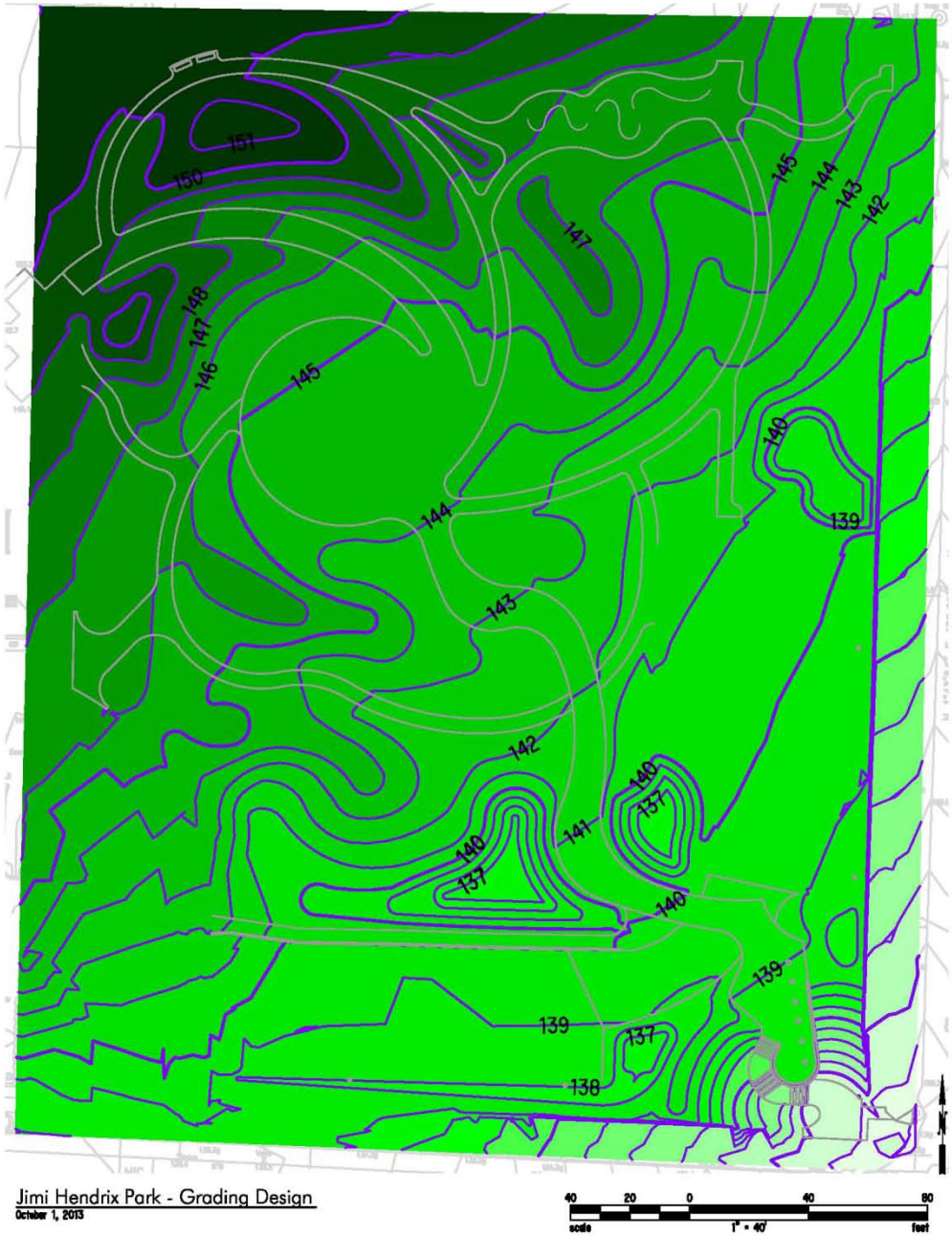

GRADING PLAN

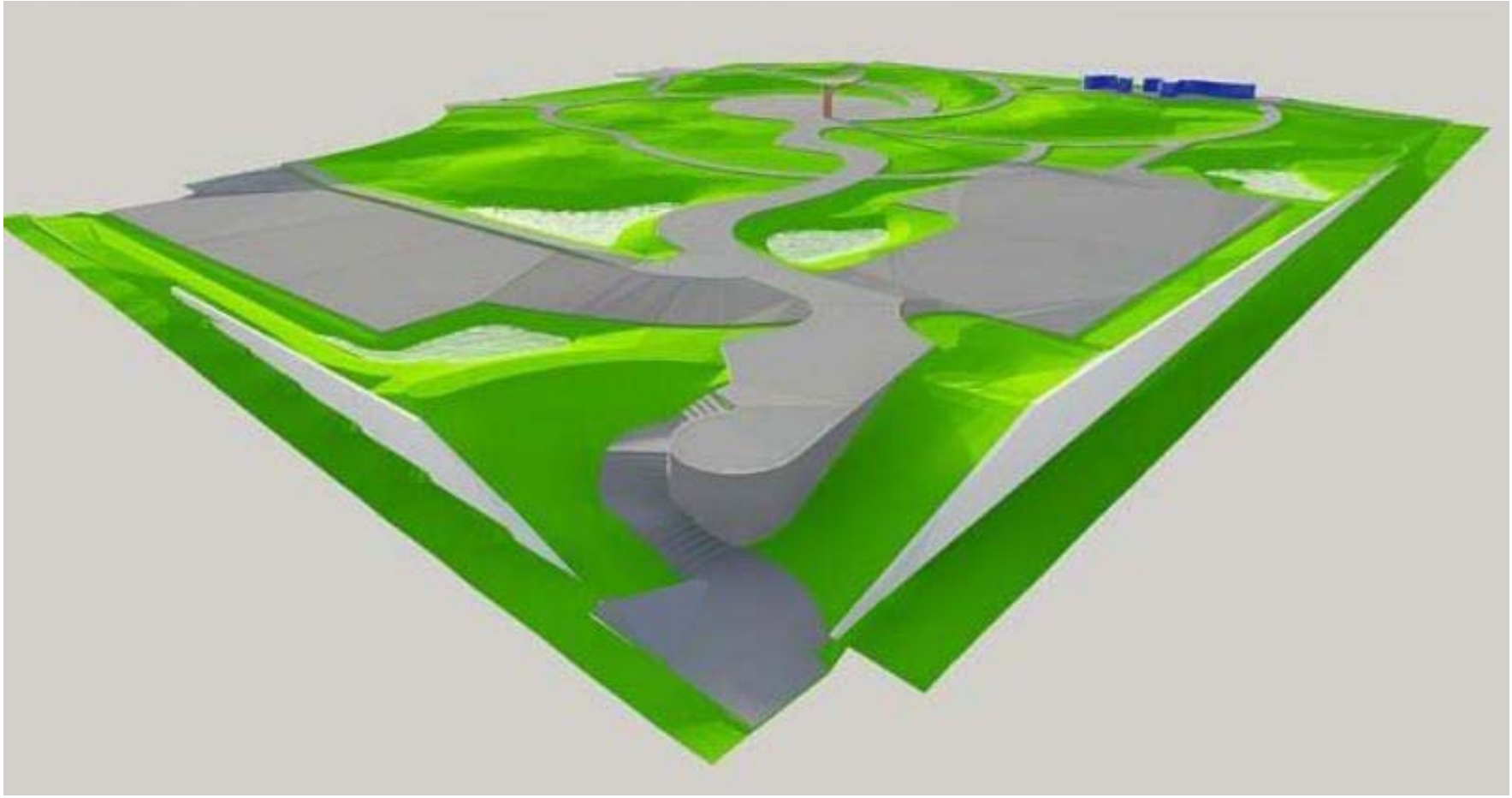

VIEW FROM SOUTHEAST CORNER

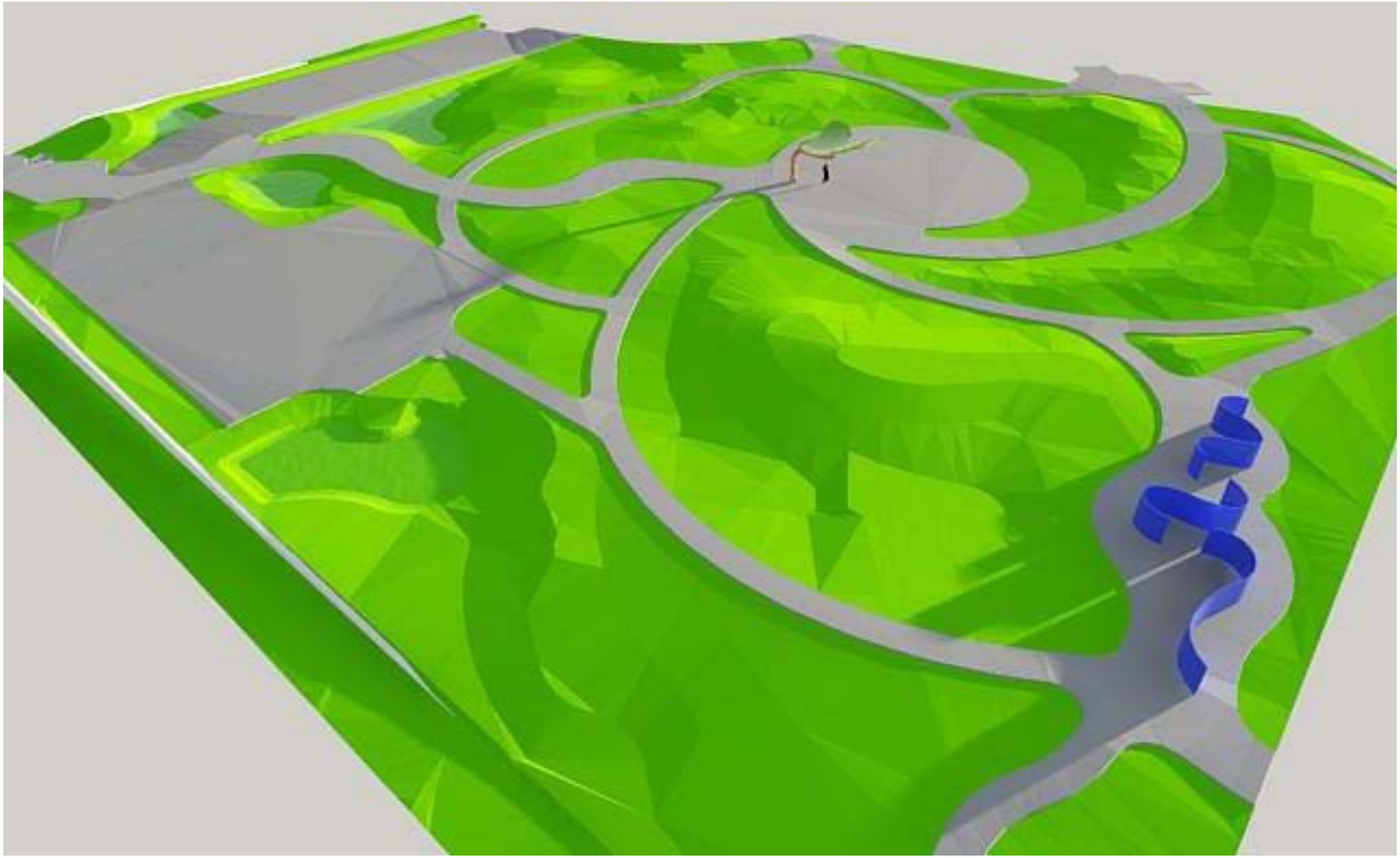

VIEW FROM NORTHEAST CORNER

JIMI HENDRIX PARK ENTRIES

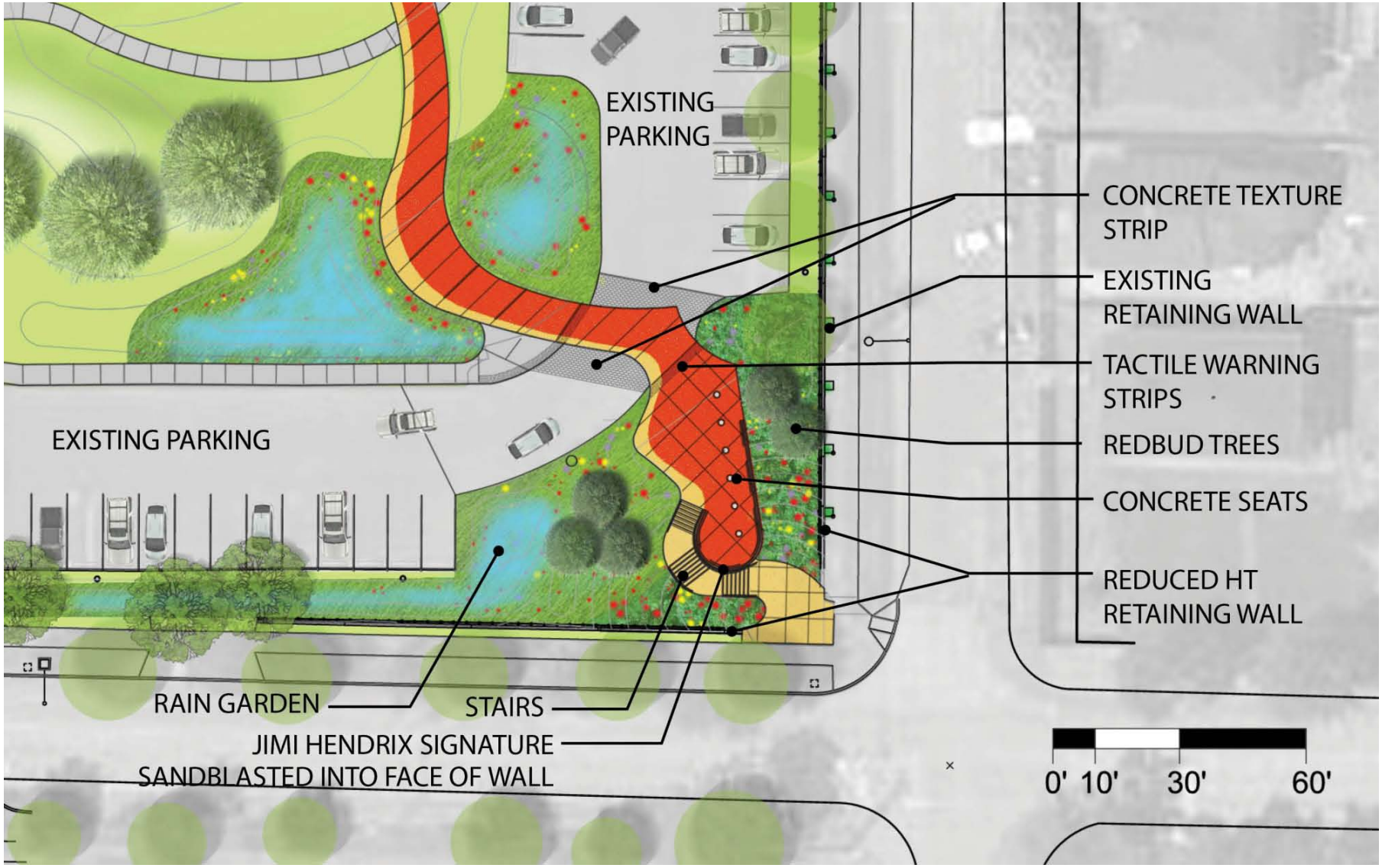

SOUTHEAST CORNER ENTRY

JIMI HENDRIX SIGNATURE SANDBLASTED INTO CONCRETE WALL

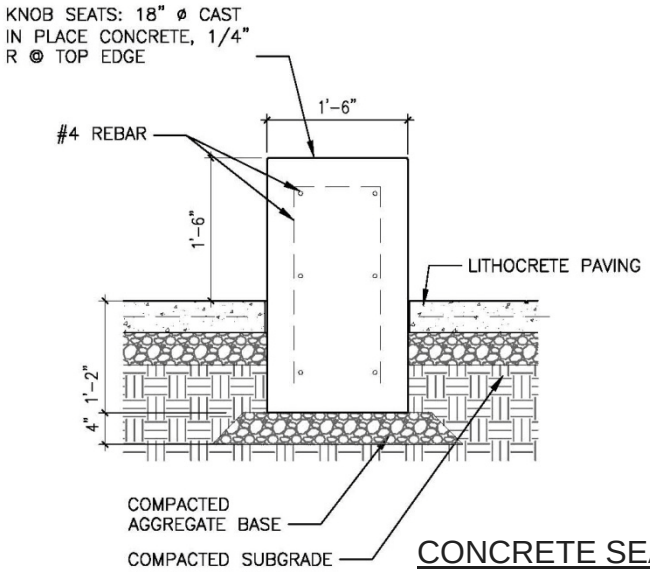

CONCRETE SEAT

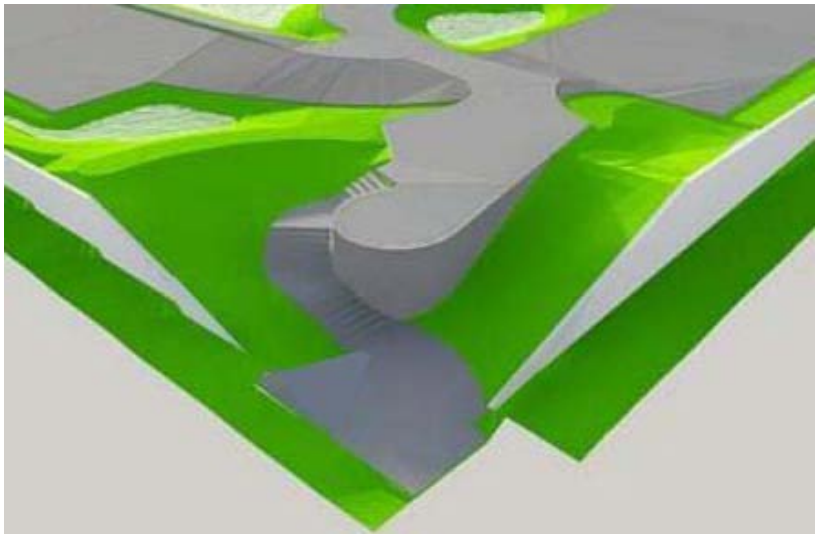

SOUTHEAST CORNER ENTRY

PAULOWNIA TREE

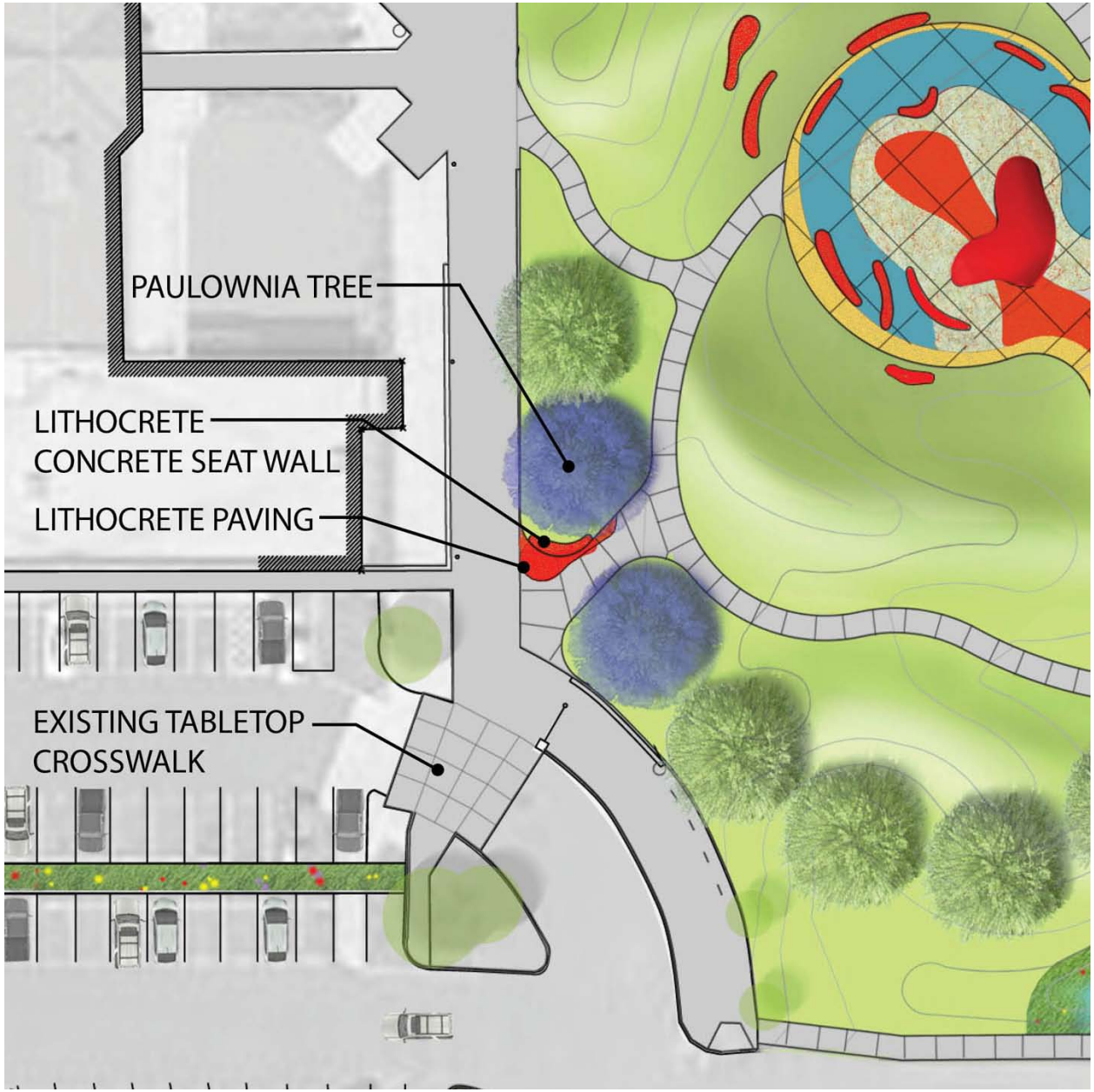

SOUTHWEST FROM NAAM SIDEWALK

WEST FROM NAAM ENTRY

NORTHEAST CORNER ENTRIES

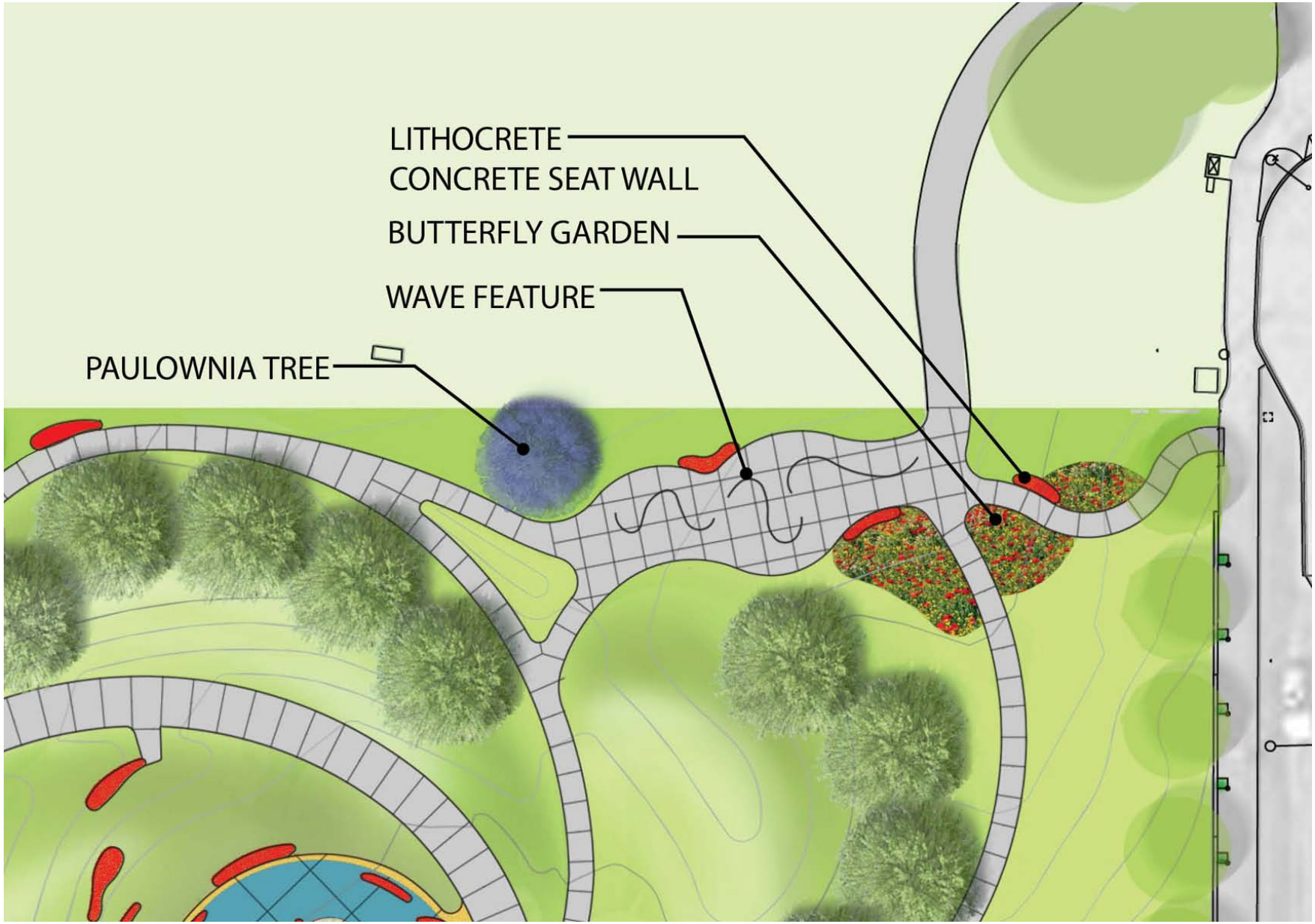

NORTHEAST CORNER ENTRIES

WAVE FEATURE FLATTENED ELEVATION

WAVE FEATURE VIEW FROM SOUTHWEST

WAVE FEATURE VIEW FROM SOUTHEAST

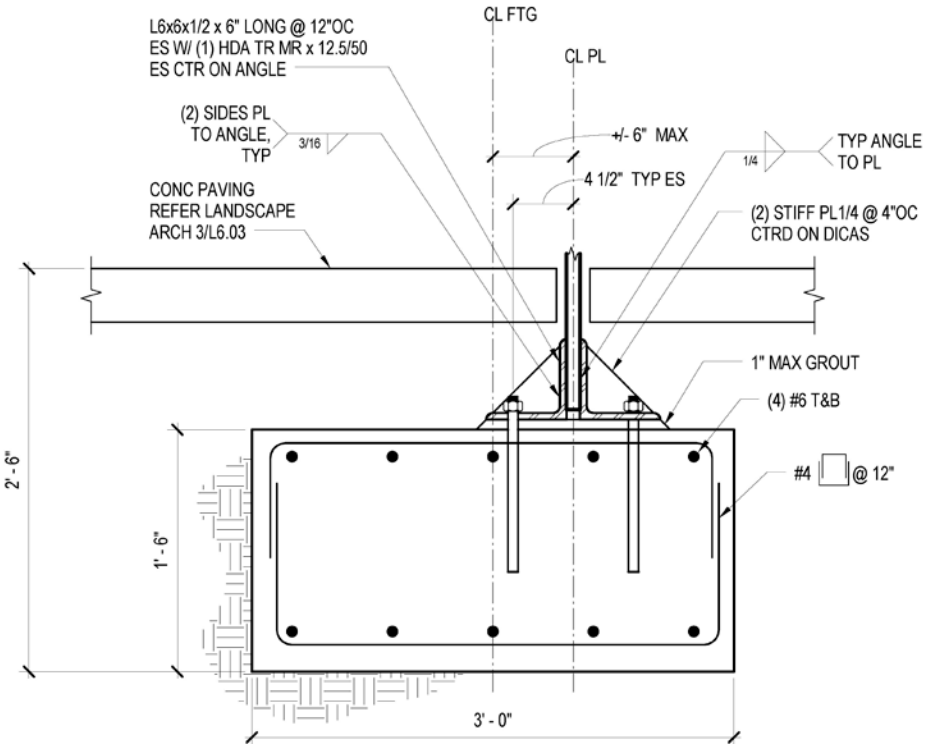

WAVE FEATURE FOOTING

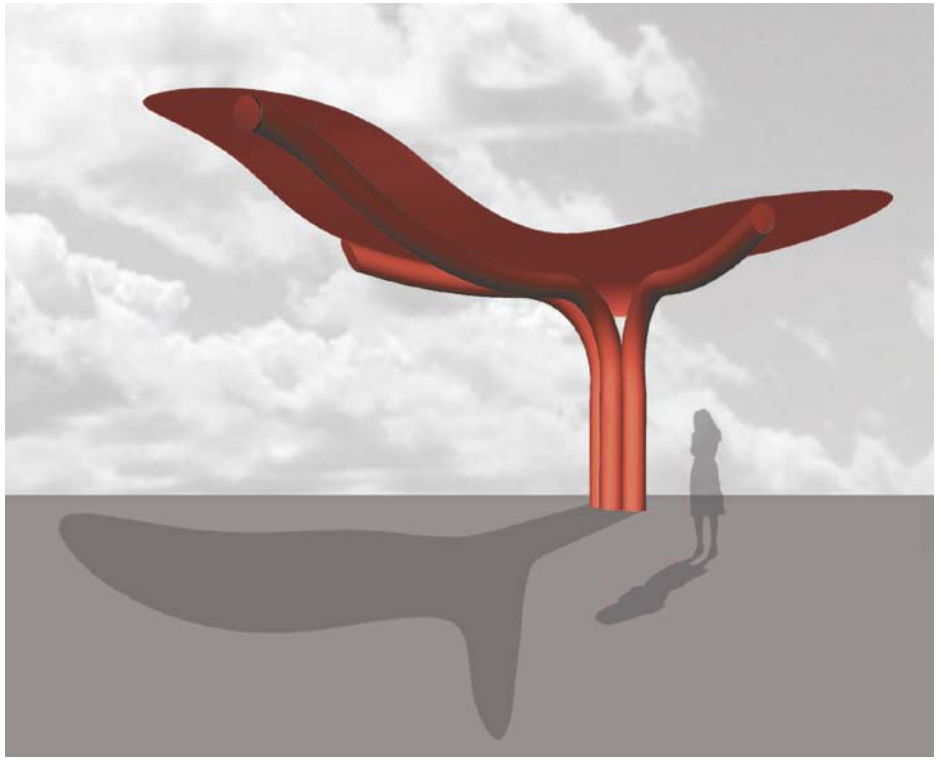

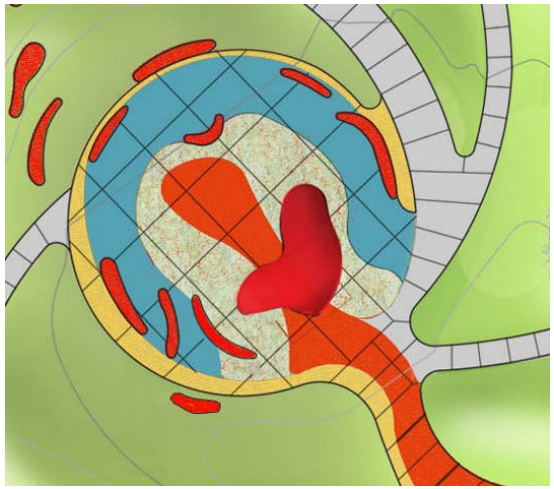

CENTRAL SHELTER

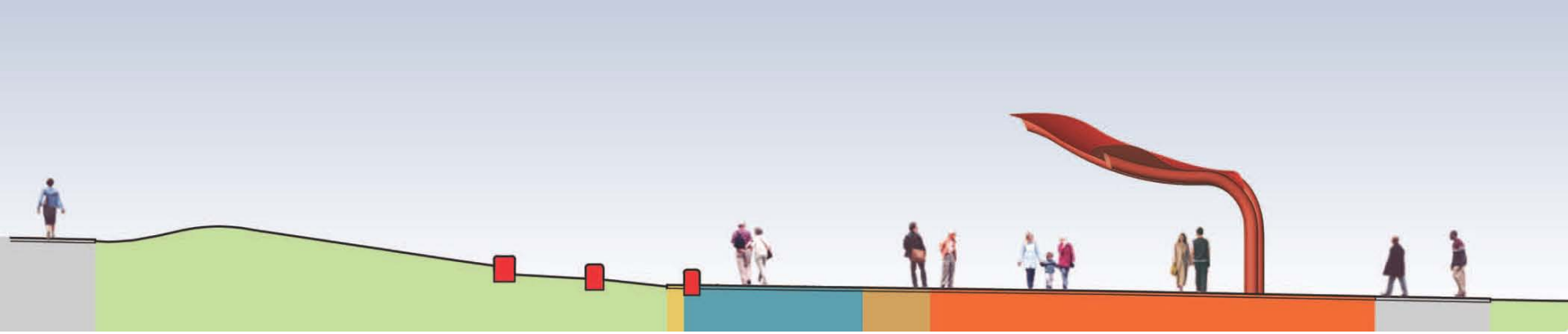

A’ A

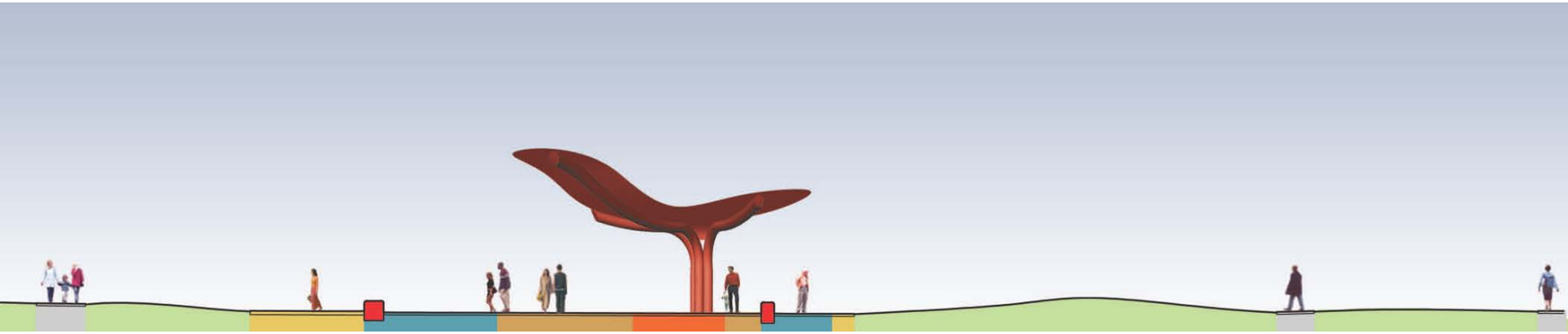

B B’

CENTRAL PLAZA

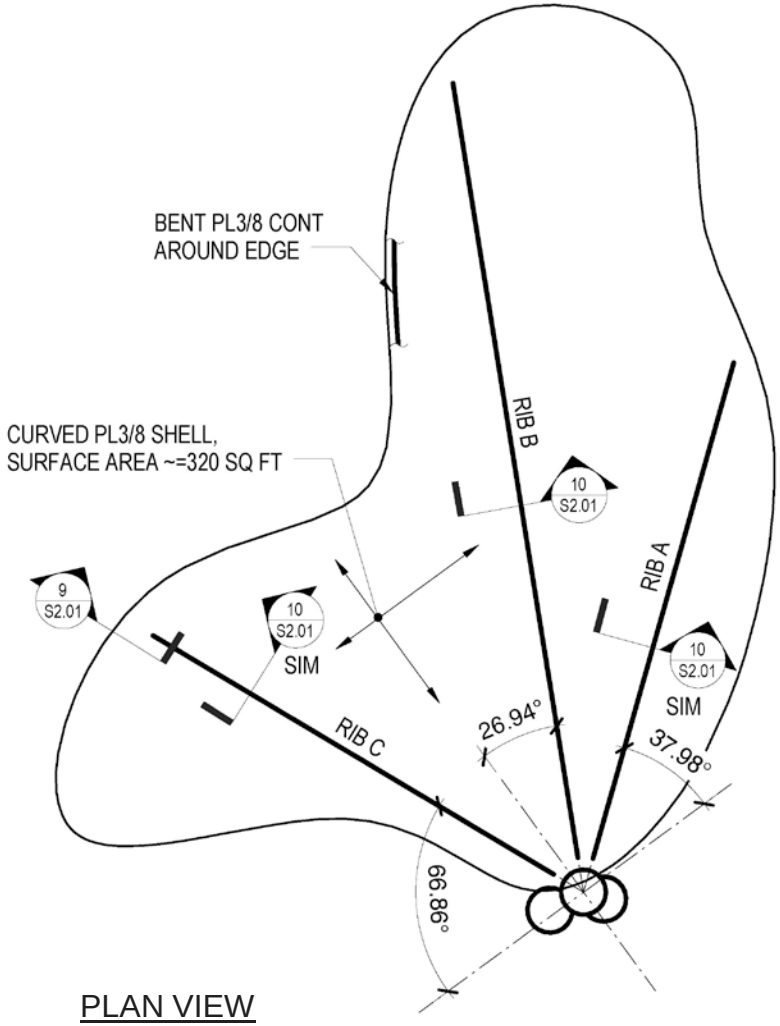

PLAN VIEW

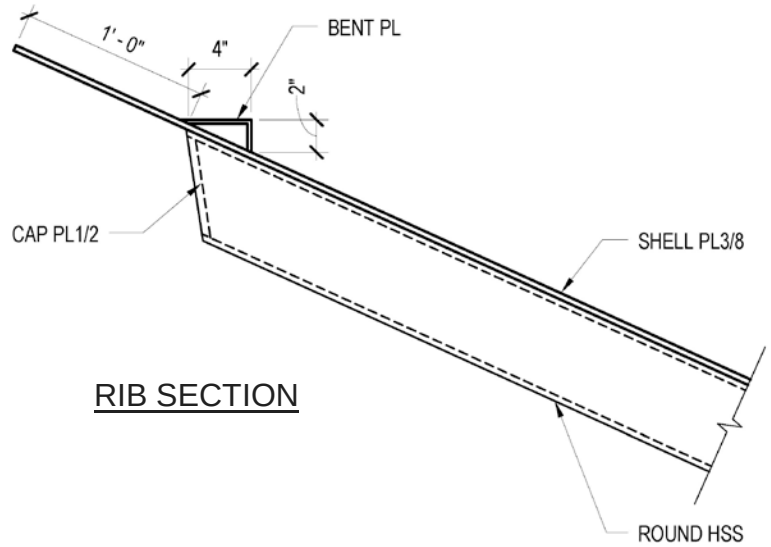

RIB SECTION

CENTRAL SHELTER

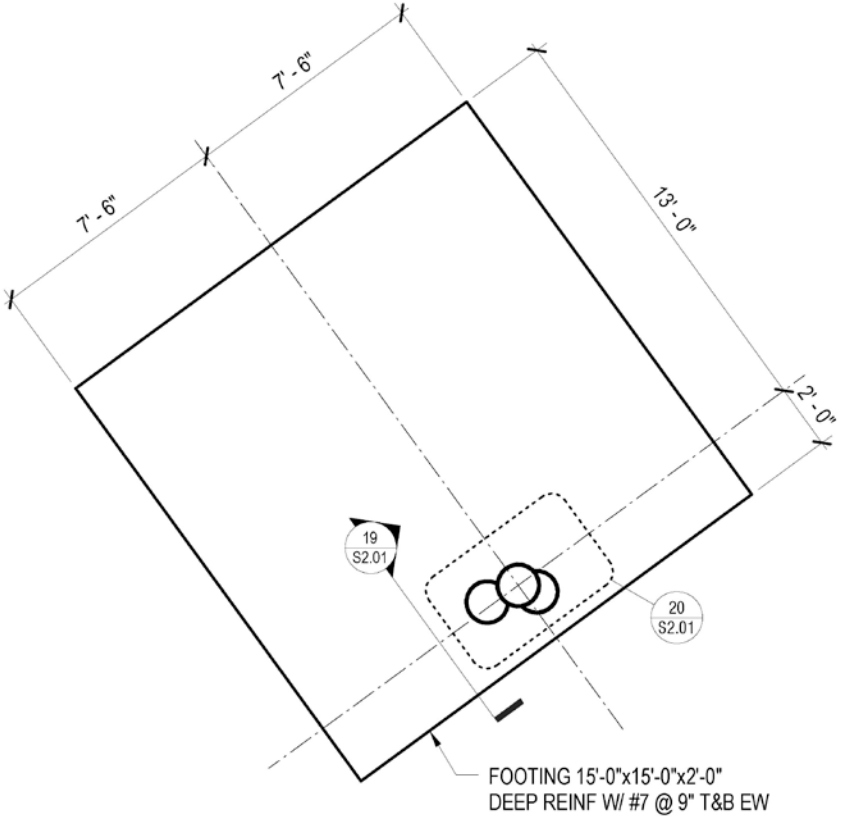

CONCRETE FOOTING AND BASE PLATE PLAN

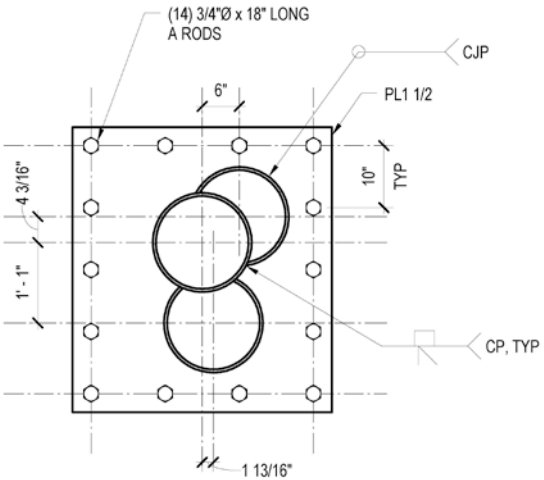

BASE PLATE PLAN

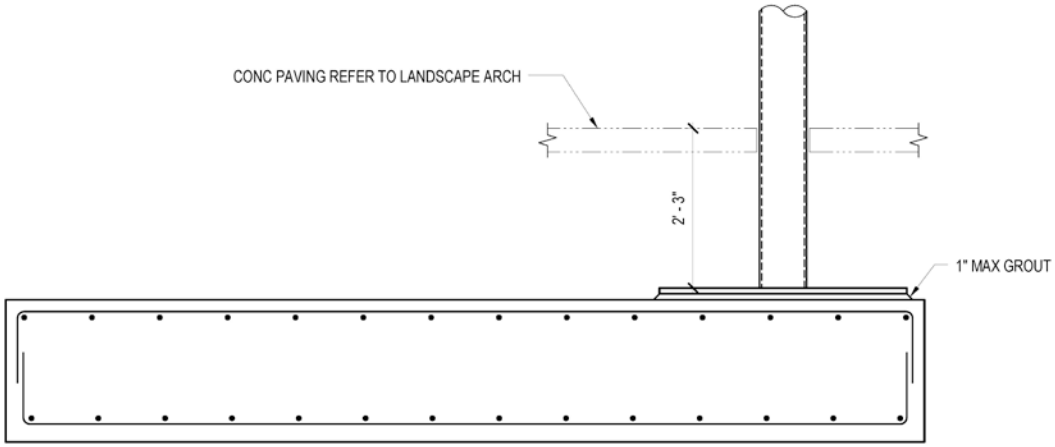

CONCRETE FOOTING AND BASE PLATE SECTION

CENTRAL SHELTER

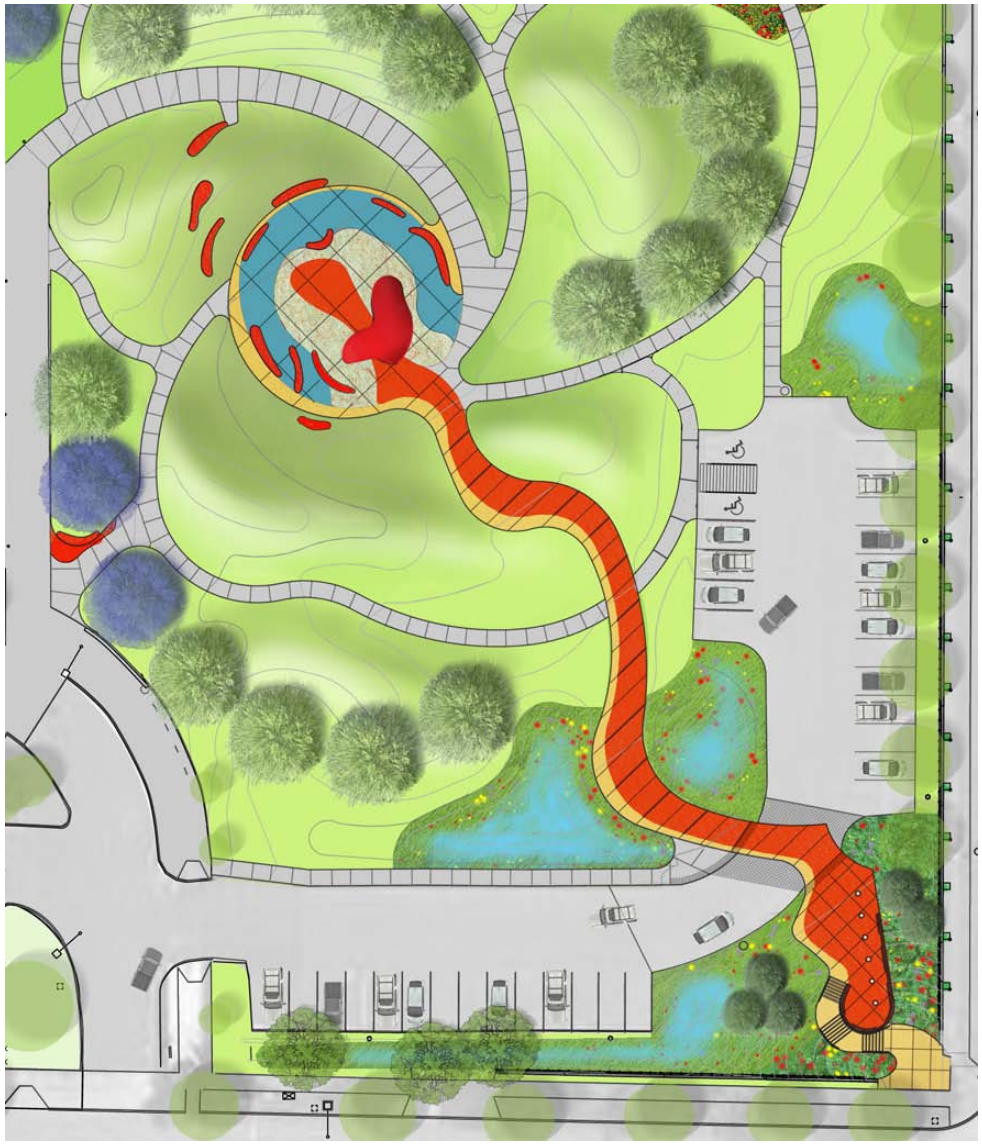

LITHOCRETE WITH
SEEDED COLORED GLASS

SPECIALTY PAVING

TEXT IMBEDDED IN STEM OF GUITAR TIMELINE PATH

TIMELINE CATEGORIES:

- THE EARLY YEARS
- LOCAL PERFORMANCE DATES
- RECORDING STUDIO DATES
- WORLD-WIDE CONCERT DATES

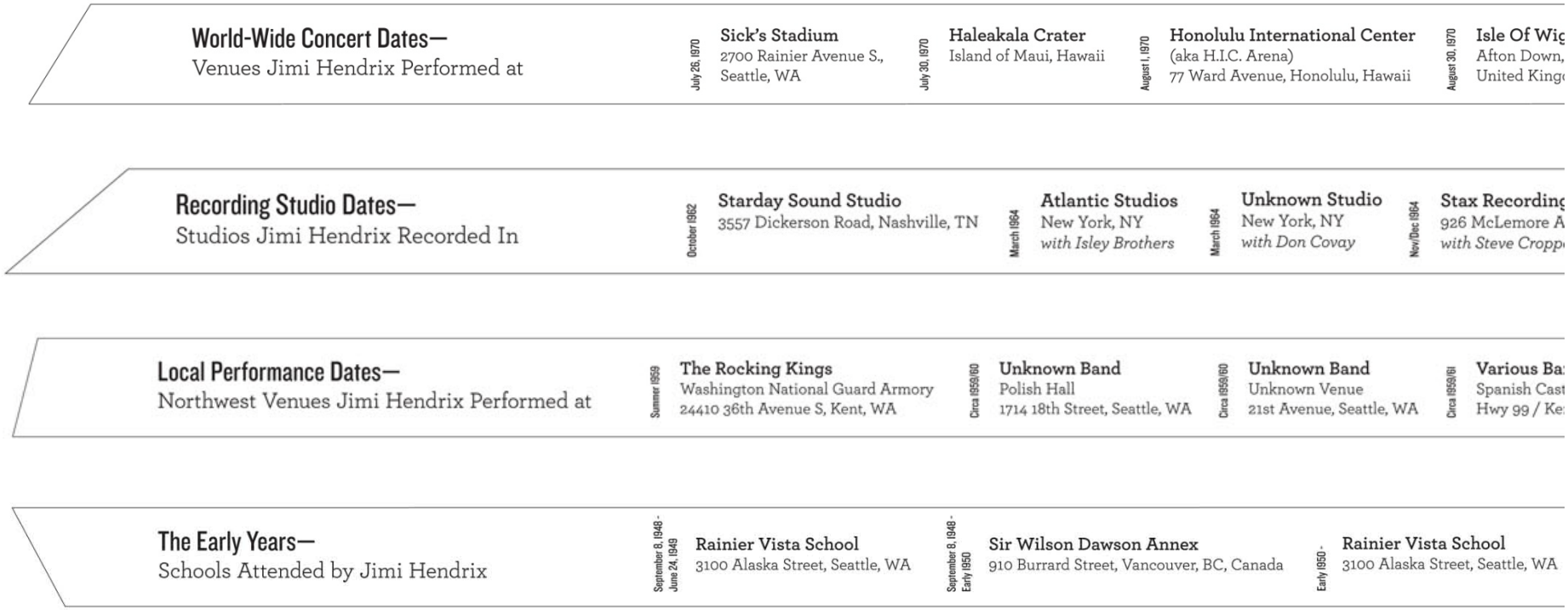

TEXT IMBEDDED IN STEM OF GUITAR TIMELINE PATH

SITE FURNITURE

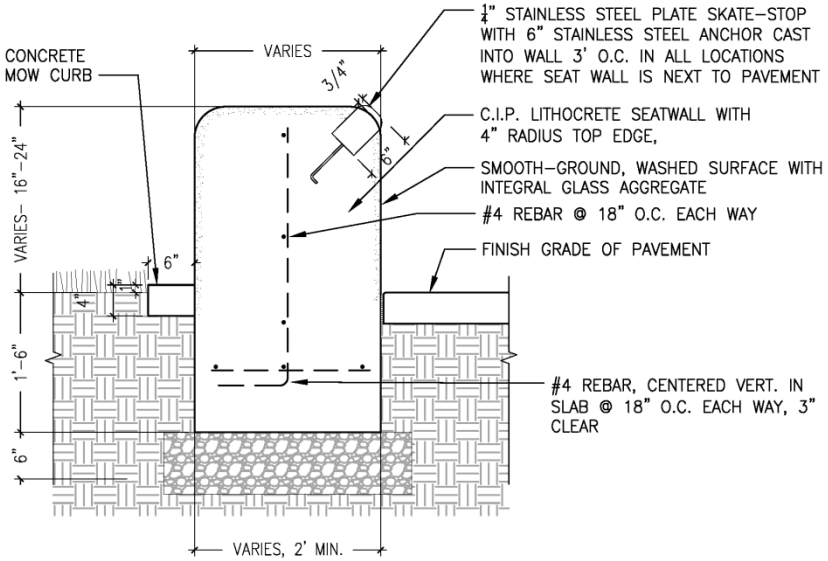

CONCRETE SEAT WALLS

ORANGE RED LITHOCRETE WITH GROUND DOWN TOPS

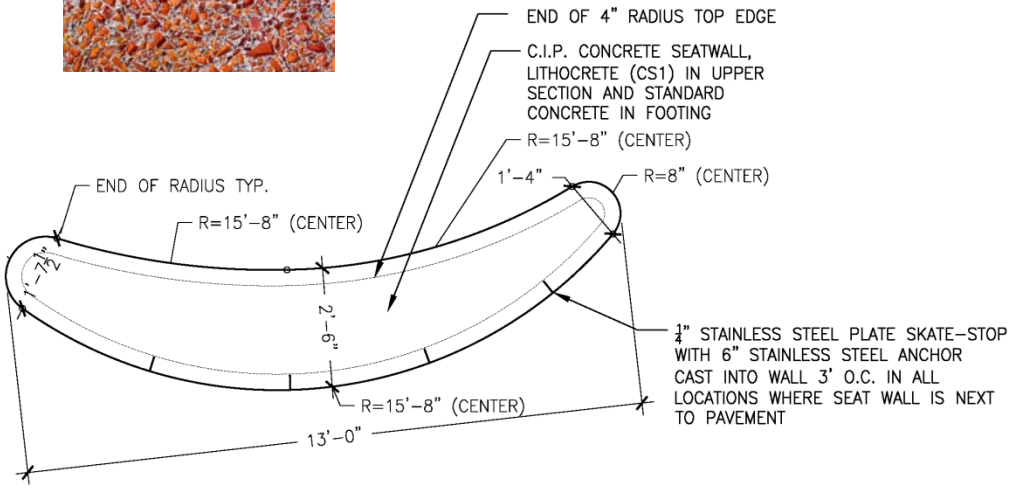

PROTOTYPE BENCH- PLAN VIEW

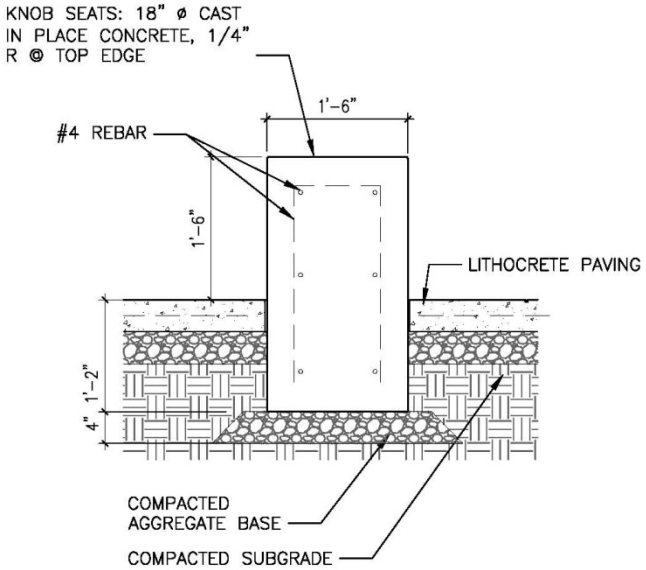

CONCRETE SEATS

CONCRETE SEATING

LANDSCAPE FORMS ‘BOLA’ BIKE RACK

TRASH RECEPTACLE

SITE FURNITURE

Cercis canadensis- Redbud

Zeolkova serrata 'Green Vase' - Japanese Zelcova

Paulownia

Betula jacquemontii

SITE TREES

Scirpus microcarpus - Small Fruited Bullrush

Carex obnupta - Slough Sedge

Juncus effusus - Scouring Rush

Cornus s. 'Kelseyii' - Dwarf Red Twigged Dogwood

Douglas Spirea - Spiraea douglasii

Siberian Iris - Iris siberica

Purple Coneflower - Echinacea purpurea

Camassia quamash - Camas

STORMWATER GARDEN

BOSTON IVY WALL VINE

Symphyotrichum nobae-baglae- Aster

Achillea filipendulina - Yarrow

Rudbeckia hirta - Black-Eyed Susan

Verbena bonariensis- Tall Vervain

Stipa gigantea Giant Feather Grass

Fragaria - Wild Strawberry

Asclepias tuberosa- Butterfly Weed

Echinacea purpurea - Purple Coneflower

Spiraea japonica

Monarda didyma 'Jacob Cline'- Bee Balm

Sedum X 'Autumn Joy'

Zauchneria californica- California Fuschia

BUTTERFLY GARDEN

LIGHTING PLAN

CENTRAL PLAZA MAST LIGHT
LUMINAIRE BY BEGA
30’ HT POLE

PEDESTRIAN HEIGHT POLE TOP
LUMINAIRE BY BEGA
12’ HT ALONG PATHS, 16’ AT PARKING LOTS

LIGHTING

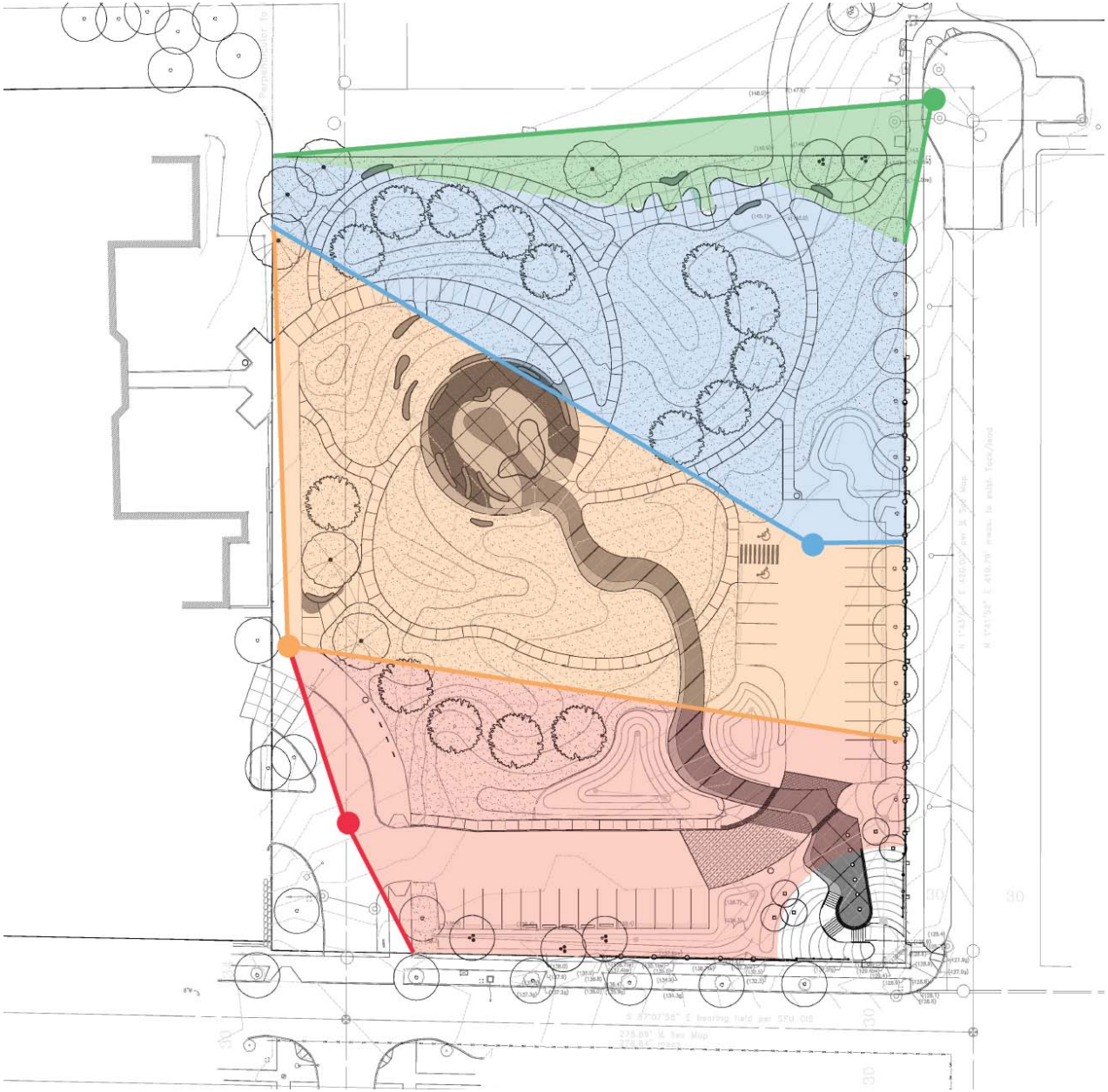

CPTED REVIEW WITH SPD
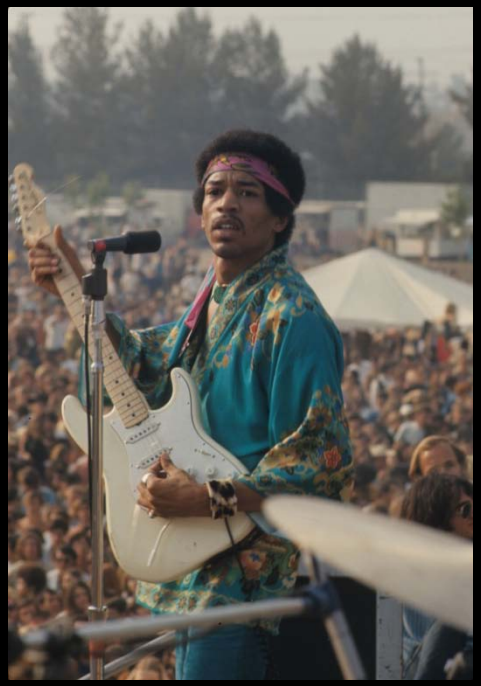
JIMI HENDRIX PARK