CITY OF SEATTLE
Department of Planning and Development
Applicant Services Center
700 Fifth Avenue, Suite 2000
P. O. Box 34019
Seattle, WA 98124-4019
(206) 684-8850
www.seattle.gov/dpd

COMMERCIAL KITCHEN HOOD WORKSHEET/CHECKLIST

Two copies of this worksheet/checklist must accompany plan sets submitted with commercial kitchen range hood permit applications. It explains and organizes information needed by the Department of Planning and Development (DPD) to efficiently review plans and issue permits. DPD will keep this document as part of the permanent project file and will use it to verify code compliance. The applicant is responsible for assuring the accuracy and consistency of the information.

A. Project Address: _____

B. Established use and history of building

Is it an existing restaurant, food processing area or food service area: ☐ Yes ☐ No

If no, provide construction or change of use permit number: _____

C. Location of exterior ductwork and mechanical equipment

1. Is ductwork or mechanical equipment located outside of building other than roof top? ☐ Yes ☐ No

2. Applicant shall provide plan and elevation views showing ductwork, duct enclosure, hood, cooking surface air supply, exhaust system, and equipment support including structural detail (See attached examples 1,2 and 3).

D. Type of Hood

1. For grease and smoke removal: Type I _____ Quantity
   (Example: deep fryer, charbroilers, grill, roasting ovens larger than 6 KW and all solid-fuel appliances)

2. For steam, vapor, heat or odor removal: Type II _____ Quantity
   (Example: steamer, pastry and pizza oven)
   Hood shall have a permanent, visible label identifying it as a Type II hood.

3. Is hood for solid-fuel cooking equipment? ☐ Yes ☐ No
   If yes, a separate exhaust system is required.

E. Type of material and gage (506.3.1.1, 507.4, 507.5)

	TYPE I HOOD				TYPE II HOOD		
		Gage			Gage		
	Type of Material	Min. Req.	Proposed		Minimum Req.	Proposed	
Duct and	Stainless Steel	18 Ga.	_____	Ga.	26 Ga. Up to 12" Diameter	_____	Ga.
Plenum	Galvanized Steel	16 Ga.	_____	Ga.	22 Ga. Up to 30" Diameter	_____	Ga.
Hood	Stainless Steel	20 Ga.	_____	Ga.	Stainless Steel 24 Ga.	_____	Ga.
	Galvanized Steel	18 Ga.	_____	Ga.	Galvanized Steel 22 Ga.	_____	Ga.
Flashing	Stainless Steel	22 Ga.	_____	Ga.	NOT REQUIRED		
	Galvanized Steel	22 Ga.	_____	Ga.			

F. Quantity of air exhausted through the hood (507.12, 507.14)

1. Canopy hoods are hoods that extend a minimum 6" beyond cooking surface.

   Type of hood proposed: ☐ Canopy ☐ Non-canopy

   Distance between lip of hood and cooking surface: Proposed: Canopy _____ ft. (4 ft. maximum allowed) Non-canopy _____ft. (3 ft. maximum allowed)

2. Complete part "i" for listed hood **or** part "ii" for unlisted hood.

   i) Listed hood. Make and model No.: _____ Listed CFM _____

   ii) Unlisted hood: Quality of air = Lineal ft. of hood front X CFM from Table below

   = _____ ft. X _____ $\frac{\text{CFM}}{\text{ft.}}$ = _____CFM

Minimum net airflow for different types of unlisted hood. (507.13) **For island hood see SMC Sec 507.13.**

Identify the cooking appliances and circle the CFM applied. Where any combination of cooking appliances are utilized under a single hood, the highest exhaust rate required by this table shall be used for the entire hood.

	Hood Exhaust CFM Table	**CFM / lineal ft. of hood front Canopy or Non-Canopy Hood**
1)	Extra heavy-duty cooking appliances (non-canopy hood not allowed) Type I hood e.g. All solid-fuel including solid-fuel pizza oven.	550
2.	Heavy-duty cooking appliances Type I hood e.g. wok, broiler (gas or electric), gas burner range.	400
3.	Medium-duty cooking appliances Type I hood e.g. deep fryer, Top range (electric or gas), skillet.	300
4.	Light-duty cooking appliances Type II hood e.g. pizza oven (electric or gas), solid fuel (see #1).	200

G. Exhaust duct system (506.3.4)

1. Applicant shall provide the specified air velocity in exhaust duct.
2. Duct size _____ in. X _____ in., duct area = $\frac{\text{_____ in. x _____ in.}}{144}$ = _____ ft²

Type of Hood		**Air Velocity (FPM)**	**CFM/Duct Area (ft²)**		**Proposed Air Velocity**
1.	I	Req. 1500 to recom. 2500	_____ / _____	=	_____ FPM
	II	Recom. 500 to 2500	_____ / _____	=	_____ FPM

2. Static pressure loss

   duct _____ in. + grease filters/extractor _____ in. + other _____ in. = Total _____ In. of H_2O

3. Fan and Motor shall be of sufficient capacity to provide the required air movement. Fan motor shall not be installed within ducts or under hood.

   Fan make and model _____ HP _____

   Static pressure _____ in. at _____ cfm.

H. Exhaust outlet location (506.3.12)

		Min. required	Proposed
1. Exhaust outlet shall terminate above roof	Type I	40 in.	
	Type II	24 in.	_____ in.
Distance from same or adjacent building		10 ft.	_____ ft.
Distance above adjoining grade		10 ft.	_____ ft.
Distance from property line		10 ft.	_____ ft.
Distance from windows and doors		10 ft.	_____ ft.
Distance from mechanical air intake		10 ft.	_____ ft.
Distance of duct above adjoining grade at alley		16 ft.	_____ ft.

2. If exhaust outlet terminates at exterior wall, provide cleaning equipment per DR 14-98. ☐ Yes ☐ No

I. Makeup air (508.1)

1. Applicant shall provide makeup air not less than 90% of the exhaust. _____ Cfm.
2. Makeup air system shall be electrically interlocked with the exhaust system, such that the makeup air system will operate when the exhaust system is in operation. Provide note on plan sheet no. _____ .
3. Makeup air shall be provided by a mechanical or gravity means of sufficient capacity. Windows and door openings shall not be used for the purpose of providing makeup air.
4. If more than 2500 cfm supplied to the space other than the hood, provide heater capable of heating makeup air supplied to the space to 65 degrees F.
   Heater model # _____ Input BTU _____ Output BTU _____
   Heater CFM _____ AFUE _____

FAN	MOTORIZED DAMPER
Make and model _____ H.P. ____	Recommended air velocity, 500 fpm
Static pressure _____ in. at cfm	Duct area req. = cfm/500 fpm /500= ft.²
Duct Dimension _____ , area _____ ft.²	Duct Dimension req. = _____
Air velocity = cfm/area _____ / _____ = _____ fpm	Eff. Damper opening _____ X _____ = _____ ft.²

J. Slope of duct and cleanout access (506.3.7, 506.3.8)

1. Horizontal duct up to 75' long	Min slope ¼ in/ft	proposed	_____ in/ft
More than 75' long	Min slope 1 in/ft	Proposed	_____ in/ft

2. Tight-fitting cleanout doors shall be provided at every change in ductwork direction Total number proposed _____

K. Duct enclosure (506.3.10, 506.3.11)

1. Ducts penetrating a ceiling, wall or floor shall be enclosed in a duct enclosure having fire rating per IBC table 601 from the point of penetration to the outside air. A duct may only penetrate exterior walls at locations where unprotected openings are permitted by Table 704.8 of 2003 Seattle Building Code.

2. For code compliance purposes, it is acceptable to assume that ducts penetrating concrete, brick or steel ceilings, walls or floors shall require a 2-hour fire-resistive duct enclosure, and for others, it shall be 1 hour.

Type of Construction	Min. Fire-Resistive Const. Of Enclosure	Proposed	Proposed Material and Construction
I F.R., II F.R.	2 hour	_____ hr.	_____
II, III, IV, V	1 hour	_____ hr.	_____

3. Duct enclosures shall be separated from the duct by at least 3. Proposed _____ In.
4. Duct enclosure shall be of **METAL STUD** construction and shall be sealed around the duct at the point of penetration and vented to the exterior through a weather-protected opening.
5. Duct enclosures shall serve only one kitchen exhaust duct.
6. Tight-fitting hinged access door shall be provided at each cleanout. Access enclosure doors shall have a fire-resistance rating equal to the enclosure. An approved sign shall be placed on access door. **"ACCESS PANEL. DO NOT OBSTRUCT"**

L. Multiple hood venting (507.15)

1. Number of hoods vented by a single duct system: Proposed: _____
   A single duct system may serve more than one hood located in the same story of the building, provided that the interconnecting ducts do not penetrate any fire resistance rated construction.
2. A hood outlet shall serve not more than a 12-foot section of hood.

M. Additional information for Type 1 hood only (507):

1. Grease filters shall be installed at minimum 45 degree angle and
   Equipped with drip tray and gutter beneath lower edge of filters. (507.11.2) Proposed _____ Degrees

2. Distance between lowest edge of grease filters and cooking surface of:
   Grill, fryer, exposed flame shall be not less than 2 ft. Proposed _____ ft.
   Exposed charcoal, charbroil shall be not less than 3 ½ ft. (507.11) Proposed _____ ft.

3. Type I hood and duct shall have clearances from combustible construction of: Proposed _____ In.
   GWB on metal stud (minimum 3" clearance required) (506.3.6, 507.9)
   GWB on wood stud (minimum 18" clearance required)

UNPROTECTED	PROTECTED With 1-hour Fire-Rated Material and Metal Stud Construction
Hood Min. Req. 18 in. Proposed _____ in.	Min. req. 3 in. Proposed _____ in.
Duct Min. Req. 18 in. Proposed _____ in.	Min. Req. 3 in. Proposed _____ in.

4. Hoods less than 12 inches from ceilings or walls shall be flashed solidly.

   Flashing provided ☐ Yes ☐ No Distance from ceiling _____ in., wall _____ in.

5. All joints and seams shall be made with continuous liquid-tight weld or braze made on the external surface of the duct system. Vibration insulation connector may be used provided it consists of noncombustible packing in a metal sleeve joint. (506.3.2, 507.7)

6. Exhaust fans used for discharging grease exhaust shall be positioned so that the discharge will not impinge on the roof. The fan shall be provided with an adequate drain opening at the lowest point to permit drainage of grease to a suitable collection device. (506.5.2)

7. Fire Suppression System. Fire Suppression System shall be per Fire Code. Portable fire extinguisher shall also be provided per Fire Code. Fire Department phone number (206) 386-1450. (509.1)

8. Performance test certificate of the hood system shall be provided to owner before final approval. Test shall verify proper operation, the rate of exhaust, makeup air, capture and containment performance of the exhaust at normal operating conditions. (507.16)

References:
1) Seattle Mechanical Code 2003
2) Director's Rule 14-98
3) Seattle Building Code 2003

Example 1

Mechanical Plot Plan

1. Identification of adjacent streets, property and alleys.
2. Any easements that cross the property or other pertinent legal features.
3. Property line and property dimension.
4. Location, size and shape of any structure present on site and proposed for construction.
5. A North arrow and scale.
6. Locate and describe the job. Show location of hood, hood exhaust and supply, existing HVAC, and HVAC exhaust and supply.

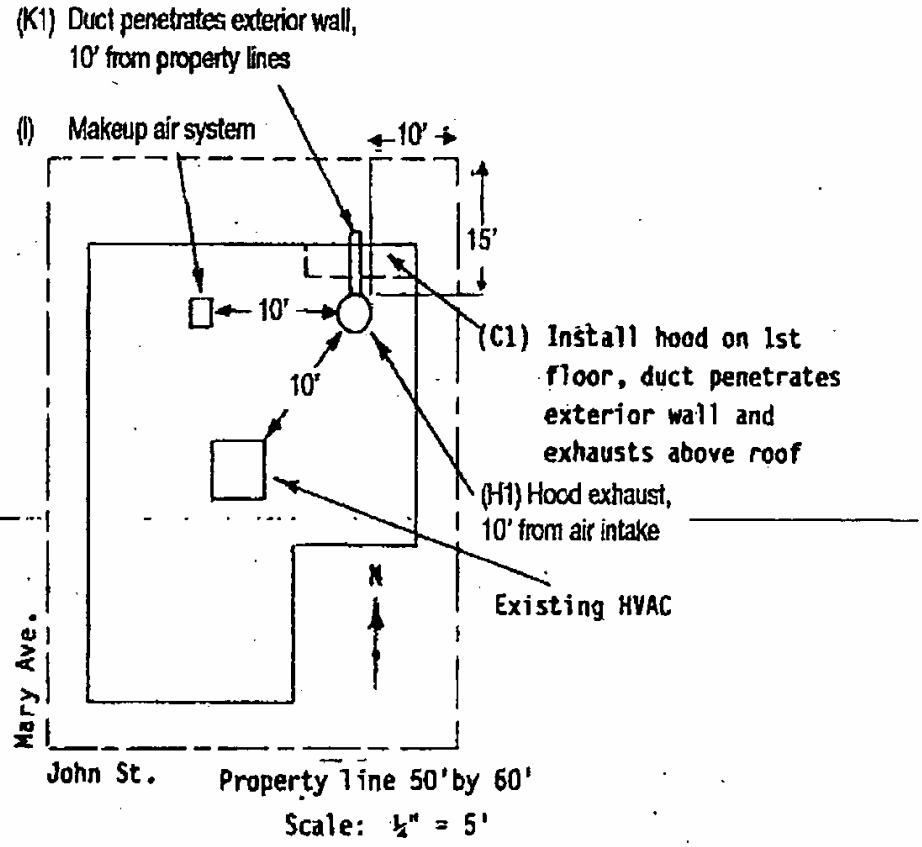

Example 2

Elevation View of Makeup Air System

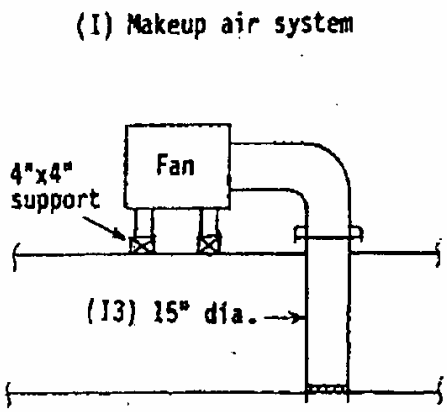

Plan View of Hood System

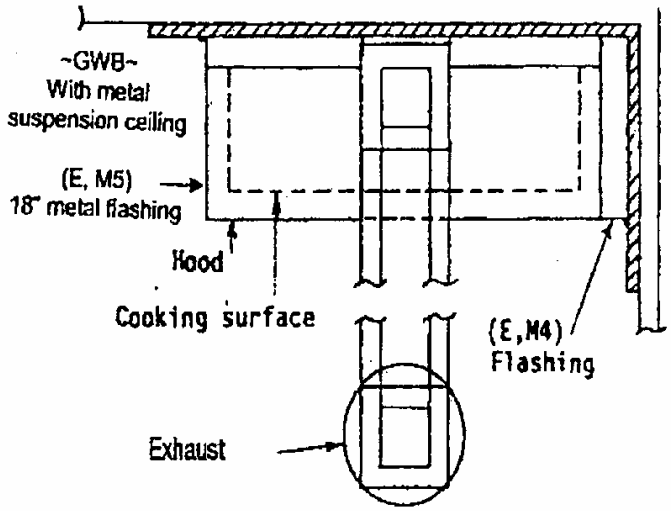

Example 3
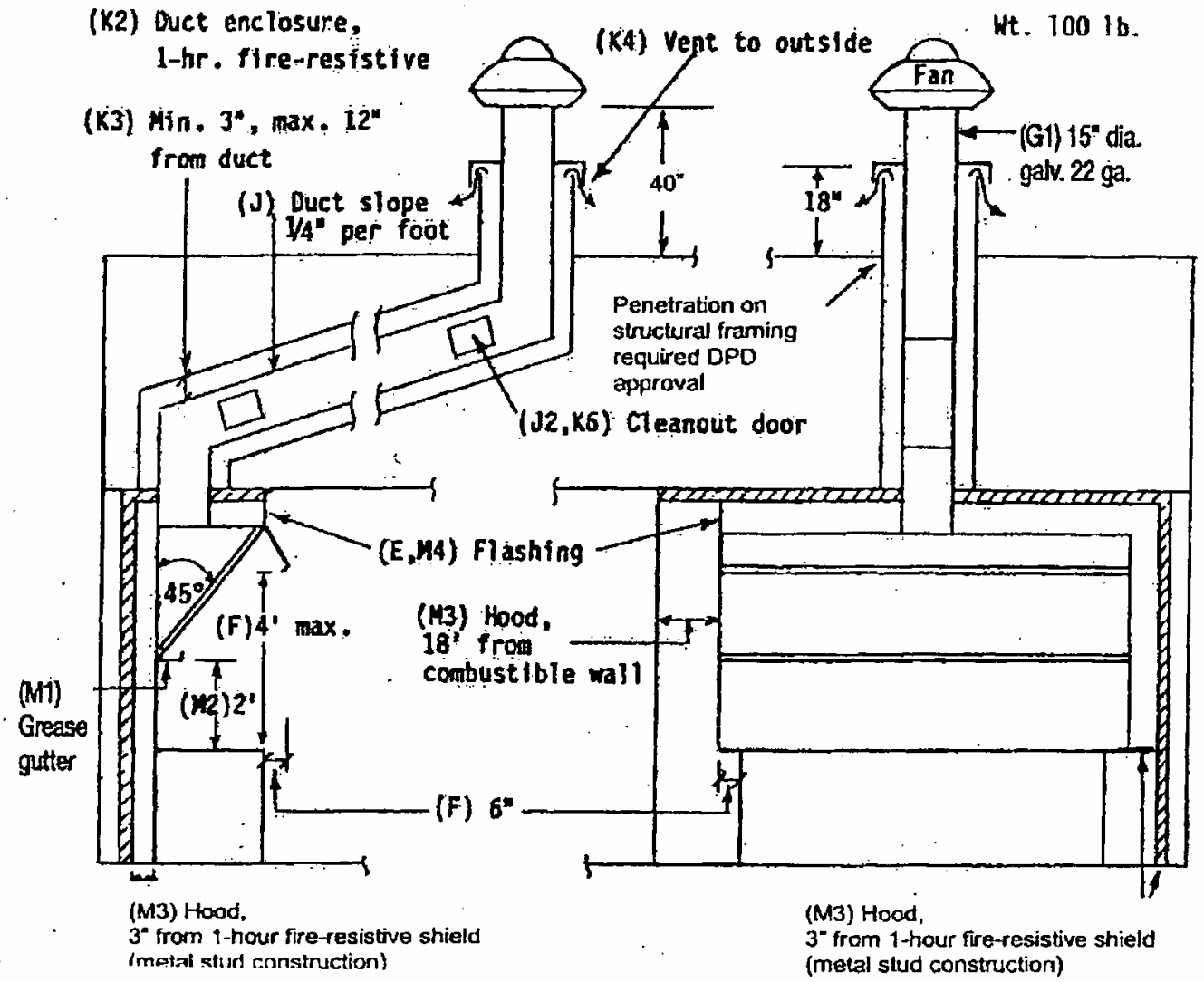
Elevation Views of Hood System