HOME EARTHQUAKE RETROFIT SERIES

GUIDE TO COMPLETING AN EARTHQUAKE RETROFIT PLAN FOR WOOD-FRAME RESIDENTIAL BUILDINGS

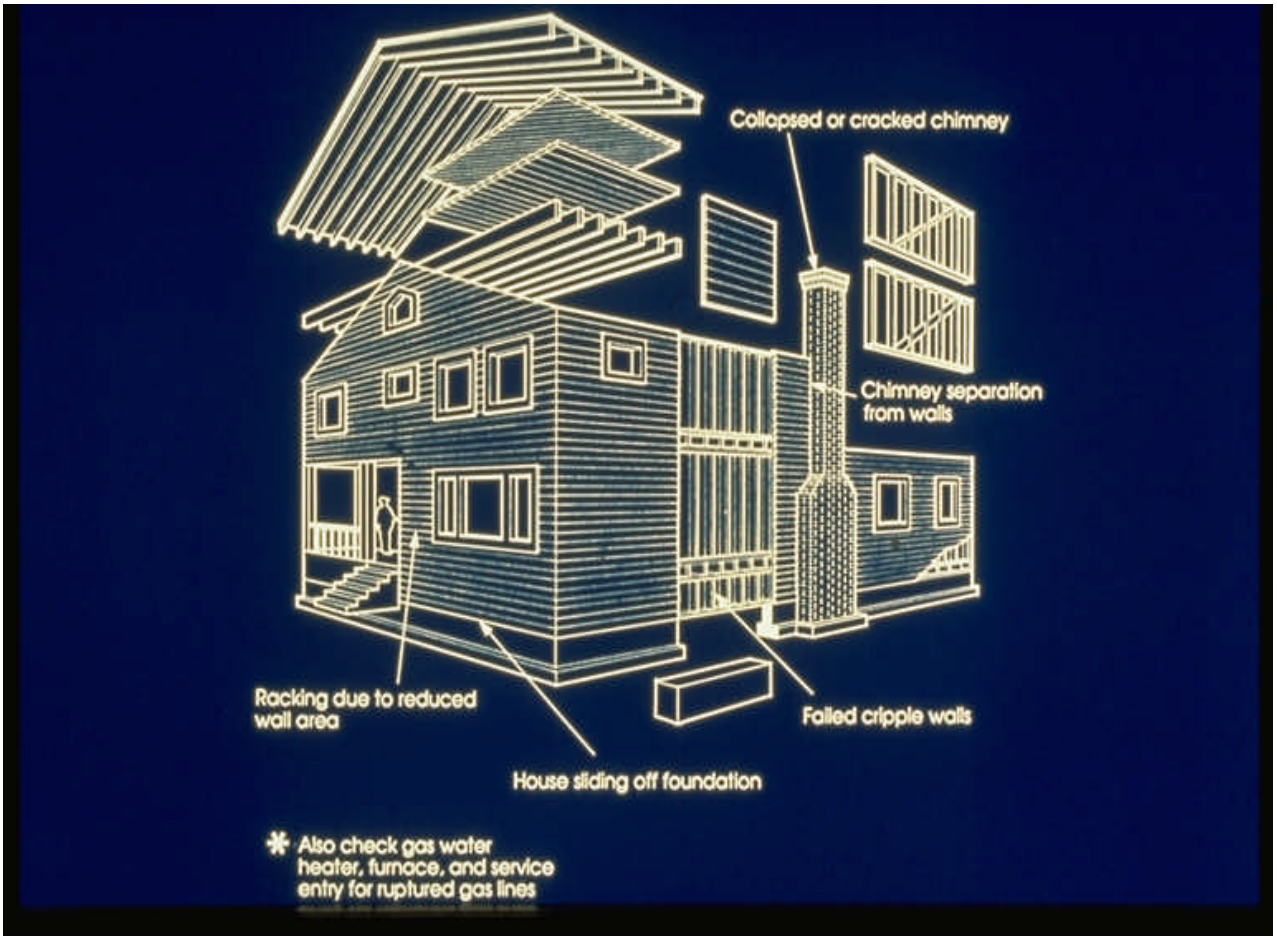

NOTE: The Seattle Department of Design, Construction and Land Use (DCLU) became the Department of Planning and Development (DPD) in October 2003.

Booklet 3 **October 1999**

Disclaimer

The information in the Home Earthquake Retrofit Information Series is based on current home earthquake retrofit practice and standards for the retrofit of existing buildings. Practice and standards may change as new information is learned. No guarantee is made that the use of the information in the series will prevent all losses in all earthquakes. Liability for any losses caused by earthquakes or as a result of applying the information in these publications is specifically disclaimed.

Acknowledgements

The Home Earthquake Retrofit Information Series is based on materials provided by the cities of San Leandro and Los Angeles, California. The Seattle Project Impact Permitting and Standards Committee modified San Leandro's *Planset Information Booklet* to meet local building practices. The plan detail sheets (construction drawings) from both cities were used to produce the Seattle Project Impact plan sheets for the Seattle Department of Design, Construction and Land Use (DCLU) permit application packet. The assistance of building department personnel from both cities is gratefully acknowledged.

The revised content and format of the Seattle Project Impact Home Earthquake Retrofit Series was developed under direction of Tom Kinsman of DCLU. Linda Noson coordinated all material revisions based on committee recommendations. Many Seattle Project Impact partners and individuals assisted in the development and design of the Home Earthquake Retrofit Series. They include:

Permitting and Standards Committee - Development
American Institute of Architects, Seattle Chapter: Judy Tucker, Geise Architects
International Conference of Building Officials: Kraig Stevenson, Seattle Conference Services Office
Retrofitters: Gary Milici, President
Structural Engineers Association of Washington: Todd Perbix, Skilling Ward Magnusson Barkshire
Washington Association of Building Officials: Charles Pearson, Tacoma Building
and Land Use Services: Tim Tyler, City of Everett Building Department.

Technical Editing
Washington Department of Natural Resources: Kitty Reed, Technical Editor

Production Design
Pemco Insurance Company: Steven Myers, Sales Analyst

Graphics
Swenson Say Faget, Scott Gilberts, CAD Manager

Home Earthquake Retrofit Information Series

The Home Earthquake Retrofit Information Series booklets are intended to promote public safety and welfare by helping you, the homeowner or contractor, reduce the risk of earthquake-induced damage in existing wood-frame residential buildings.

The booklets contain detailed information to help you understand and use the Standard Home Earthquake Retrofit (SHER) Planset to increase the structural safety of your home. The primary purpose of the minimum prescriptive requirements in the standard plan is to reduce the likelihood that residential buildings will fall off their foundations during an earthquake. California homes retrofitted according to the requirements in the standard plan remained on their foundations during the 1994 Northridge Earthquake in Los Angeles. When applied to qualified buildings, the SHER Planset will improve the performance of existing buildings.

This series also guides you through obtaining a building permit to retrofit a wood-frame residential building using the plan's simplified construction methods.

The information series consists of three booklets:

(1) The Overview summarizes the information contained in each of the series booklets, provides general information on why it makes sense to strengthen residential homes to reduce earthquake-induced damage, and introduces the advantages and limitations of the voluntary SHER Planset. Appendix A of the Overview contains a Definition of Terms.

(2) The Guide to Completing the Home Assessment Checklist provides detailed information to help you determine if your home qualifies to use the prescriptive requirements and if earthquake retrofit work is needed.

(3) The Guide to Completing a Home Earthquake Retrofit Plan for Wood Framed Residential Buildings shows you how to complete a plan for your own earthquake retrofit project according to the minimum prescriptive requirements in the SHER Planset. The earthquake retrofit plan is submitted to the building department as part of the permit application.

These booklets accompany the Home Earthquake Retrofit Permit Application Packet in the City of Seattle. The application packet includes the Home Assessment Checklist and two-sheet planset that summarize the elements of the SHER Planset and provide a space to draw your plan. Outside of Seattle, additional inserts may be included in the application packet to provide local information about home earthquake retrofit programs and building construction requirements.

If you are familiar with earthquake retrofit construction practices, the information provided in the application packet may be all you need to understand the plan requirements, complete the permit application, and identify local resources to assist you.

—LOANS—

To qualify for special Project Impact Earthquake Retrofit loans, the Home Assessment Checklist must be prepared by a contractor or homeowner who has completed a Project Impact home retrofit class. Submit a copy of the class certificate with your loan application.

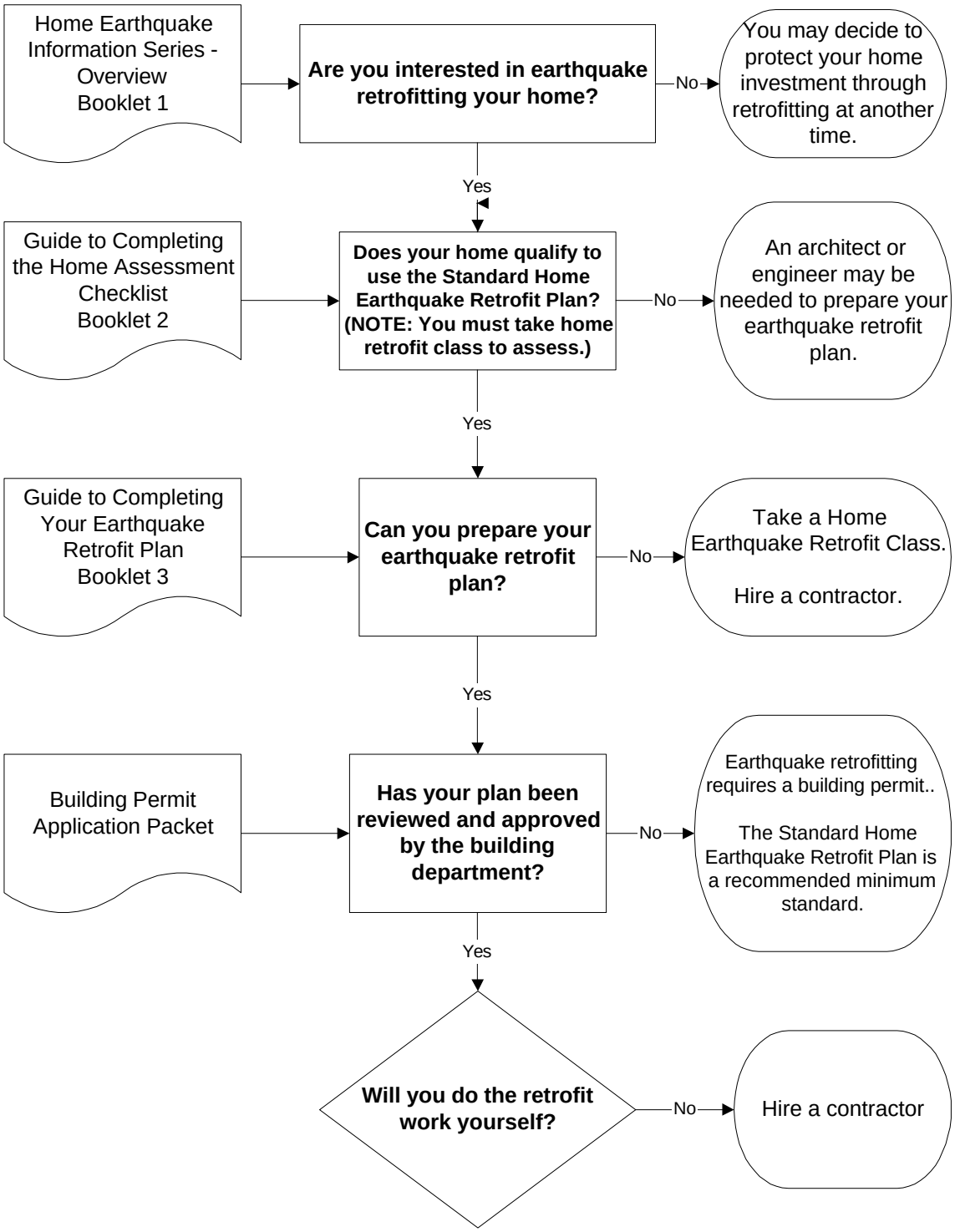

TABLE OF CONTENTS

DISCLAIMER i

ACKNOWLEDGEMENTS i

HOME EARTHQUAKE RETROFIT INFORMATION SERIES iii

QUALIFYING FOR A HOME RETROFIT LOAN iv

INTRODUCTION 1

PURPOSE OF THE GUIDE TO COMPLETING AN EARTHQUAKE RETROFIT PLAN FOR WOOD FRAME RESIDENTIAL BUILDINGS 1
- Standard Home Earthquake Retrofit Plan Format 1
- Does your home qualify to use the Standard Home Earthquake Retrofit Plan? 1
- What if your home does not qualify? 1
- Do I Need A Building Permit? 2
- How Many Copies of my Plan Must Be Submitted to Obtain A Building Permit? 2

HOW TO COMPLETE YOUR EARTHQUAKE RETROFIT PLAN 4

SUMMARY OF RETROFIT TASKS 4

DETAILED TASK DESCRIPTIONS 7
- Task 1. Drawing the foundation outline 7
- Task 2 Replacing sections of damaged concrete foundation wall 9
- Task 3. Anchoring the sillplate to the foundation wall 10
- Task 4. Bracing the pony walls 15
- Task 5. Connecting the floor framing system to the pony wall or foundation wall 23

REVIEW OF THE STEPS FOR COMPLETING AN EARTHQUAKE RETROFIT PLAN 26

OBTAINING A BUILDING PERMIT AND FINISHING THE PROJECT 27
- Building Permit Issuance 27
- Beginning Work 27
- Required Inspections 27
- Additional Inspections 27

APPENDIX A: DEFINITIONS OF COMMON CONSTRUCTION TERMS 29

APPENDIX B: BASIC CONCEPTS FOR EARTHQUAKE RESISTANT DESIGN 31

APPENDIX C: THE HAZARD ASSESSMENT CHECKLIST 34

APPENDIX D: ADDITIONAL PLAN DETAILS 38

APPENDIX E: NAIL AND LAG SCREW SIZES 46

FIGURES

Figure 1 Side view of a typical retrofit wall section. Numbers refer to the drawings on the Plan Detail Reference—Sheet 2 5

Figure 2 Isometric view of a typical retrofit, showing foundation anchor bolts, pony wall bracing, and framing clips, from inside the basement or crawlspace. 6

Figure 3 Sample rough sketch of foundation outline (view from above) 7

Figure 4 Installation of anchor bolt vertically into the sill plate using rotary hammer. 11

Figure 5 Sample manufacturers sheet for anchor side plates 12

Figure 6 Mechanical anchor bolts for connecting the sill plate to the foundation wall 13

Figure 7 Illustration of the movement of a sample wall section in response to earthquake shaking, called side-sway. 15

Figure 8 Pony wall without structural panels to strengthen the wall to present excessive side-sway 16

Figure 9 A structural panel installed to brace the pony wall to prevent this short wall from collapsing, causing the home to fall off the foundation wall. 16

Figure 10 How to cut out a section of structural panel to accommodate piping, etc. 18

Figure 11 Example of a plywood structural panel with five-plys of wood. 20

Figure 12 An example of overdriven nails. Nails should be driven flush with the surface of the structural panel 21

Figure 13 Illustration of a framing clip installed between the floor framing system and the underlying sill plate showing the applied load generated by the force of the earthquake along the clip's long direction. 24

Introduction

Purpose of The Guide to Completing an Earthquake Retrofit Plan for Wood Frame Residential Buildings

This booklet gives you step-by-step instructions for an earthquake retrofit project according to the Standard Home Earthquake Retrofit (SHER) Planset. Damage to homes in the California Northridge Earthquake show that incorrect or incomplete retrofits are "as bad as having no retrofit at all" (FEMA Seismic Retrofit Training Handbook 1998). To be effective, the earthquake retrofit of your home should at least conform to the minimum prescriptive requirements in the standard plan. Prescriptive means that the information in the plan must be applied in the exact manner described. Table 1 provides a summary of the minimum prescriptive requirements. Contact the City of Seatltle Department of Design, Construction and Land Use (DCLU) to find out how to obtain copies of the SHER Planset.

The information in this booklet does not teach you how to design an earthquake retrofit, but it does explain how to apply the planset's simplified construction methods to complete your retrofit project and to select construction materials according to the plan's minimum prescriptive requirements. Not all details in the SHER Planset will work for your building, so you will need to select the details applicable to the framing system of your specific building.

Retrofitting your home according to the minimum prescriptive requirements in the SHER Planset will reduce the likelihood that the building will shift on its foundation, but structural retrofitting will not necessarily prevent all earthquake damage.

SHER Planset Format

The 1998 SHER Planset is printed on two plan sheets: the Applicant Plan (Sheet 1) and the Plan Detail Reference (Sheet 2). The Applicant Plan contains three sections: Section I - Permit Application Instructions, Section II - Earthquake Retrofit Plan Instructions, and Section III - General Notes. The General Notes section includes a detailed description of plan materials and installation requirements as well as a brief summary of the plan's purpose, scope, and definition. The Plan Detail Reference provides detailed construction drawings, called plan details, showing how to carry out the retrofit work. This booklet shows how a homeowner or contractor can use the information on these two plan sheets to complete an earthquake retrofit plan. Space is provided on the Applicant Plan sheet to draw your plan.

Does your home qualify to use the SHER Planset?

The guidelines and plan details in the SHER Planset apply to one-, two-, and three-story wood-frame, residential buildings that meet the qualification criteria in the Home Assessment Checklist (Appendix C). The completed checklist must be submitted as part of your building permit application and is included with the plan sheets in XXXX 's permit application packet. The Guide for Completing the Home Assessment Checklist (Booklet 2) provides help in using the checklist to determine if your home qualifies to use the SHER Plan.

What if your home does not qualify?

If your home does not qualify to use the SHER Planset, alternate earthquake retrofit methods and materials may be used when approved by the building official. You may need to hire an engineer or architect to design an alternate earthquake retrofit plan to address your home's specific needs. Your local building department may be able to help you decide if you can use the SHER Planset or identify resources that can help you make that decision. A number of additional plan details are included in Appendix D of this booklet for conditions that do not exactly meet those covered by the SHER Planset. The building official may approve these plan details for similar conditions in your home.

The retrofit method contained in the SHER Planset may be inadequate to prevent serious structural damage to homes that do not qualify to use the plan's simplified approach.

Do I Need A Building Permit?

You must get a building permit before you start the work shown on your earthquake retrofit plan. Call your local building department for permit information. Use of the SHER Planset should reduce the amount of time needed to obtain a building permit. Dity of Seattle plans to review within 24 hours your application to complete an earthquake retrofit of a qualifying home. Review of your home's earthquake retrofit plan by the building department can help identify inappropriate applications of the plan's prescriptive methods. The plan reviewer may be able to suggest alternate solutions or planning resources to assist you.

How Many Copies of My Plan Must Be Submitted to Obtain A Building Permit?

Seattle's Department of Design, Construction and Land Use requires that two copies of your completed Earthquake Retrofit Plan be submitted, along with the completed Home Assessment Checklist. Many copy stores have a machine capable of copying your plan. Your completed earthquake retrofit plan will consist of:

(1) the Applicant Plan (Sheet 1 of 2) with a drawing in the space provided showing a dimensioned outline of your home's foundation wall with the number of the plan detail you will use for carrying out the work marked on the appropriate location on the outline;
(2) the Plan Detail Reference (Sheet 2 of 2) showing all the plan details included in the SHER Planset;
(3) any additional plan details you prepared or had prepared to address conditions not covered by the drawings on the Plan Detail Reference Sheet.

Table 1 Summary of Minimum Prescriptive Requirements in the Plan

Stories Above Pony Wall (1)	Anchor Size and Spacing (2,3,4)	Short sill plates (2,3,4)			Requirements for Pony Wall Sections (5)	Framing Clips	Joist Blocking (7)
		6 ft to < 12 ft	30 in. to < 6 ft	<30 in. near center			
ONE	½ in. at 6 ft on center maximum	3 anchors	2 anchors	1 anchor	Total bracing not less than 50% of wall length. Install part of bracing at each end of wall section and remainder equally spaced in between ends.	32 in. on center maximum	On alternate joists
TWO	½ in. at 4 ft on center maximum (6)	4 anchors for ½ in. bolts; 3 anchors for 5/8 in.	2 anchors	1 anchor	Total bracing not less than 70% of wall length. Install part of bracing at each end of wall section and remainder equally spaced in between ends	24 in. on center maximum	On alternate joists and on every joist above wall bracing
THREE	5/8 in. at 4 ft on center maximum (6)	4 anchors	2 anchors	1 anchor	Install bracing over 100% of the wall length	16 in. on center maximum	On all joists

Notes:

1. These standards apply to selected wood-frame residential buildings as defined by the Home Assessment Checklist. Complete the checklist first to determine if the standard plan can be used.
2. The plate washers for use with adhesive or expansion anchors on wood shall be 2-inch by 2-inch by 3/16 inch for ½ inch anchors and 2½- inch by 2½- inch by ¼ inch for 5/8-inch anchors.
3. Existing sill plate anchor bolts cast in concrete and in sound condition shall be permitted to provide all or a portion of the sill plate connection required if the anchor bolt diameter and spacing meet or exceed the requirements in this table.
4. Anchor side plates shall be permitted to substitute for adhesive or expansion anchors where conditions prevent anchor installation vertically through the sill plate. Anchor side plates shall be spaced the same as adhesive or expansion anchors per the requirements in the General Notes (Section V-E and V-H on the Applicants Plan in the permit application packet).
5. The wall bracing length shall be at least 48 inches or two times the height of the pony wall, whichever is greater. Wall bracing is required at all exterior walls. Panels installed on individual pony wall sections shall be nearly equal in length and nearly equally spaced along the wall. Nails shall be 8d common with a minimum shank diameter of .131 inches.
6. Two story buildings may substitute 5/8-inch anchors at a maximum of 6 feet on center and three story buildings may substitute ½ inch anchors at a maximum of 2 feet 8 inches on center.
7. Existing 2-inch nominal thickness joist blocking shall be permitted to meet this requirement. New blocking may be either 2-inch nominal dimensioned lumber or 1 1/8-inch plywood.

How to Complete Your Earthquake Retrofit Plan

Summary of Retrofit Tasks

Figure 1 and 2 show a typical side and front view, respectively, of a wall strengthened to meet the minimum prescriptive requirements in the SHER Planset. The numbers marked on Figure 1 refer to the number of the detail on the Plan Detail Reference Sheet. See plan format above. This booklet helps you determine which of the plan details on the Reference Sheet are relevant to your home's retrofit plan.

You will need to complete five tasks to prepare your Earthquake Retrofit Planset.

Task 1. Drawing the foundation outline.
Task 2. Select method of replacing sections of damaged concrete foundation wall, if necessary.
Task 3. Select method of anchoring the sill plate to the foundation wall.
Task 4. Select method of strengthening the pony wall.
Task 5. Select method of connecting the floor framing system to the pony wall or to the foundation wall

You may skip a task only if your home already meets the plan requirement being addressed. Detailed guidance and information for completing each task can be found on pages 7 through 25.

If you use alternate construction methods, you must prepare plan details showing how the work will be done. You may need an architect or engineer to design alternate construction methods. Label each alternate detail to be used and mark the number on your plan.

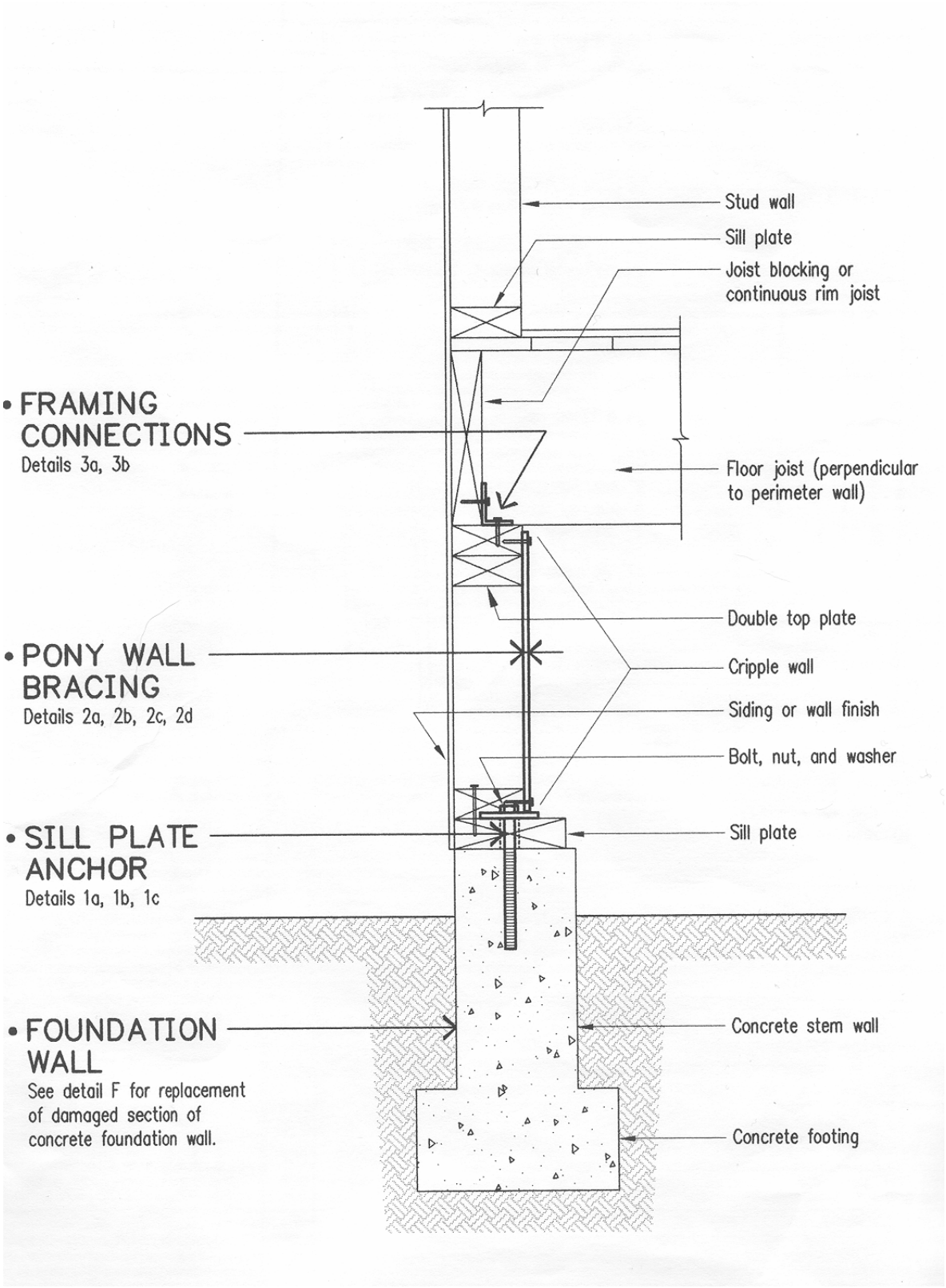

Figure 1 Side view of a typical retrofit wall section. Numbers refer to the drawings on the Plan Detail Reference – Sheet 2.

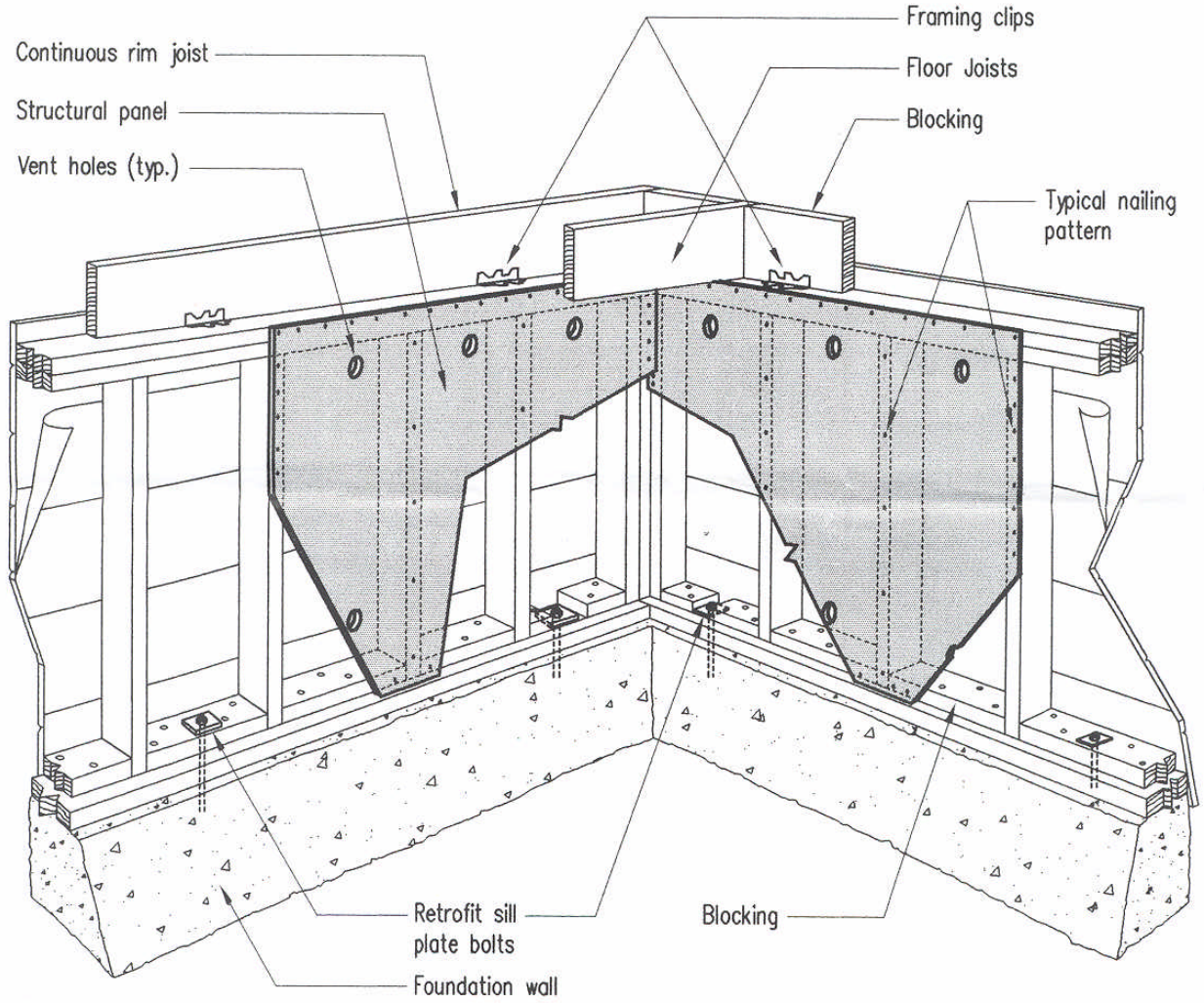

Notes:

1. This sketch shows a sample wall section that has undergone a typical seismic strengthening retrofit.
2. This is a general sketch and is not intended to supersede requirements contained in the Standard Home Earthquake Retrofit Plan or in the specific installation details.

FRONT VIEW (isometric)

Figure 2 Isometric view of a typical retrofit, showing foundation anchor bolts, pony wall bracing, and framing clips, from inside the basement or crawlspace.

Detailed Task Descriptions

On the following pages are detailed instructions for completing the five tasks needed to complete your earthquake retrofit plan.

Task 1. Drawing the foundation outline.

In the space provided on the Applicant Plan sheet in the building permit application packet (Sheet 1, Section II), draw a detailed outline of the home's exterior foundation wall. Show the length of each exterior foundation wall segment, the height of all pony walls, the location of foundation wall obstructions and openings, and the direction of run (orientation) of floor joists and joist beams. In Tasks 2 through 5, you will identify and mark on your foundation outline the number of each standard plan detail you will use in your retrofit. You will also mark on the foundation outline where structural panels will be installed to brace pony walls. When all the plan details and the structural panel layout are marked on the foundation outline, you will have completed your Earthquake Retrofit Plan. To see a sample completed, refer to Sheet 1 of the Standard Home Retrofit Plan. Figure 3 shows a sample of a foundation wall layout.

Step 1. Measure the length of each segment of exterior foundation wall.
Use a tape measure of sufficient length. Some portions of the house, such as porch walls and additions, may not rest on the foundation. You must show these areas on your foundation outline for your plan to be compete. The initial drawing can be a rough sketch with the measurements rounded off to the nearest foot. Figure 3 is a sample rough sketch.

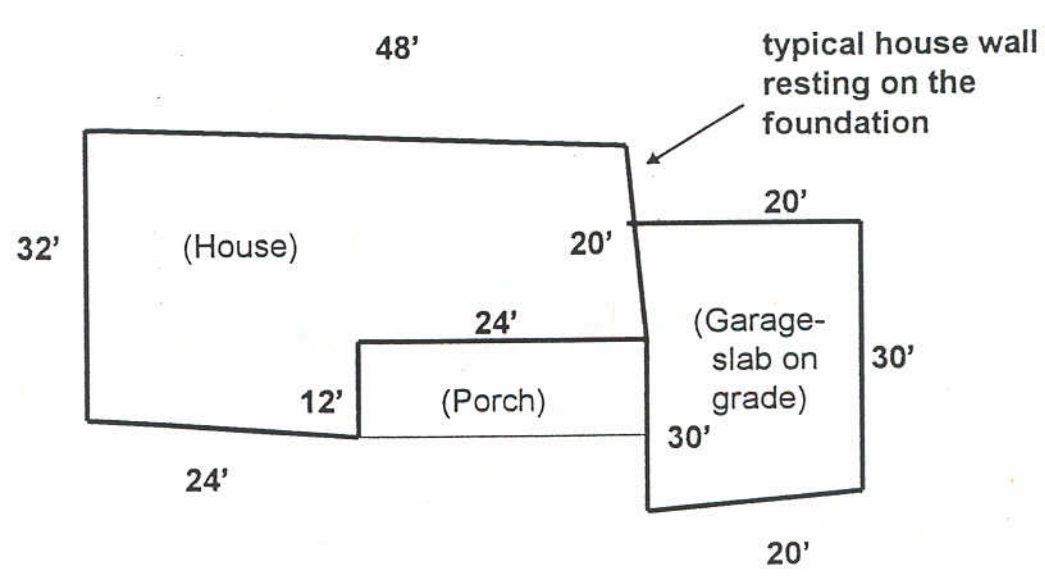

Figure 3 Sample rough sketch of foundation outline (view from above)

Step 2. Draw the foundation outline to scale.

Once the lengths of all the perimeter walls of the house have been measured and sketched as shown in Figure 2, prepare a precise drawing to scale using either graph paper or the grid lines in the space provided on the Applicant Plan Sheet (Sheet 1, Section II). Check the box on the Applicant Plan Sheet to indicate that the scale being used equals either one foot per square (4 feet per inch) or two feet per square (8 feet per inch). Using two feet per square, a drawing of the foundation outline for a home up to 120 feet by 49 feet can fit into the space provided.

Step 3. Mark the location of all foundation wall obstructions and openings on the foundation outline.

Certain elements along the perimeter of the house may interrupt the continuity of the foundation walls or pony walls. You should check the underfloor or basement area for openings in the foundation wall for fireplace and chimney footings; crawlspace openings; vent openings; gas and electrical meters, panels or piping; and any other breaks in the foundation wall caused by objects or openings that may project through sections of the foundation wall. Show on the scaled foundation outline the size and location of each perimeter wall obstruction or opening. Make sure to identify any area that is built on a concrete slab-on-grade or that does not have an underfloor space, such as an attached garage.

Step 4. Show the direction (the orientation) of all floor joists and beams.

The orientation of the floor joists and beams with respect to the pony wall or foundation wall determines the specific plan element needed to (1) anchor the sill plate to the foundation and (2) connect the floor framing system to the supporting structure.

End of Task 1

You have now completed a detailed drawing showing an outline of the home's foundation with obstructions and opening in the foundation wall and the direction of run (orientation) of all floor joists and beams noted. A completed Sample Plan is included on the Applicant Plan Sheet.

Task 2 Select method of replacing sections of damaged concrete foundation wall, if necessary.

The second task in completing your home retrofit plan is to identify how you will replace a damaged section of a continuous concrete perimeter foundation wall that may have been determined to be damaged or in poor condition. To qualify to use the SHER Planset, the foundation should be of concrete or reinforced masonry in good condition. Damaged or weak sections must be replaced before completing the earthquake retrofit work. Some weaknesses in the concrete foundation wall may not be identified until the retrofit work is being done.

A home that rests directly on the ground without an approved foundation or that has a foundation system made-up only of wood posts supported on isolated pad footings (post and pier construction) needs to have a new foundation system installed as approved by the building official. Discontinuous foundations and unreinforced masonry foundations need to be evaluated by an architect or engineer. When approved by the building official, these foundations may be strengthened according to the recommendations in the evaluation report rather than replaced.

Step 1. Select the concrete foundation replacement detail – Plan Detail F.
Plan Detail F on the Plan Detail Reference Sheet (Sheet 2) shows a simplified construction method that you may use to replace a section of damaged concrete foundation.

Step 2. Review the material information on the Applicant Plan Sheet, General Notes .
All concrete shall be fully cured and hardened, uncracked and in sound condition. A screw driver may used to probe the concrete to identify weakened sections. Some weaknesses in the foundation will become apparent when trying to install anchor bolts. A hole drilled into weakened concrete may become too large to hold the anchor bolt. Sometimes a chemical anchor installed using adhesives to hold the anchor bolt will provide a secure attachment. Concrete with excessive cracking, deterioration or damage shall be replaced. All new concrete replacement footings shall be of 2500 psi (pounds per square inch) minimum compressive strength.

Step 3. Review the installation information on the Applicant Plan Sheet, General Notes.
Proper shoring and sequence of replacement must be provided to avoid weakening the structure and creating a hazard for occupants or passers by. When existing footings and stem walls are replaced in sections, the person performing the work shall take care to insure that all reinforcing steel shall be lapped a minimum of 24 inches and shall be doweled into the existing concrete with adhesive or drypack a minimum of 8 inches. Note that the anchor bolt used in newly poured concrete has a J-shape to provide greater resistance to being pulled out during earthquake shaking.

End of Task 2

Task 3. Select method of anchoring the sill plate to the foundation wall

The third task is to identify how you will anchor the sill plate to the foundation. Anchoring the sill plate to the foundation prevents displacement of the framed walls relative to the underlying foundation wall. The standard plan detail you will use to anchor the sill plate to the foundation depends in part upon the amount of working space above the sill plate. Homes built before 1965 rarely have an anchored foundation that meets the plan requirements. Many homes built between 1965 and 1975 do have anchored foundations. However, a few homes built as recently as 1980 may be inadequately anchored.

Step 1. Select the applicable sill plate anchor detail(s) from the Plan Detail Reference Sheet – Plan Details 1a, 1b, 1c, and 1d.

A pony wall of at least 27 inches is needed to operate a common rotary hammer drill held in the upright position to install expansion bolts or chemical anchors vertically into the sill plate (Fig. 4). Some special rotary hammer drills are designed to install vertical bolts into smaller spaces. Standard Plan Detail 1a on the Plan Detail Reference Sheet (Sheet 2), shows the installation of install expansion bolts or chemical anchors vertically through the sill plate.

When the pony wall is less than 27 inches you may be able to nail the top of an L-shaped side anchor plate into the sill plate using Plan Detail 1b on the Plan Detail Reference Sheet. The expansion bolt or chemical anchor may then be installed into the side of the foundation wall through the holes in the side anchor plate.

If no pony wall is present above the sill plate, a flat side plate (Plan Detail 1c) or an adjustable side plate (Plan Detail 1d) may be used. The expansion bolt or chemical anchor may be installed into the side of the foundation wall as in Plan Detail 1b. Unlike Plan Detail 1a and 1b there is no place to install expansion bolts, chemical anchors, or nails vertically into the side plate used in Plan Detail 1c.

Several types of manufactured anchor side plates are designed for specific foundation and sill plate conditions. Figure 5 shows a sample manufacturer's sheet for an anchor side plate. The L-shaped plate, the flat plate, and the adjustable plate discussed above represent three common types. Using more than one type of plate may be necessary and is permitted. How far the sill plate is set back from the inside face of the foundation wall, as well as from any framing obstructions above the sill plate or the pony wall, will dictate what type of anchor plate can be used.

On your foundation outline, mark the number and location of each standard plan detail to be used to anchor the sill plate to the foundation.

Figure 4 Installing anchor bolts into the sill plate using a rotohammer. Note that the sill plate is wider than the pony wall studs. (Photo from City of San Leandro)

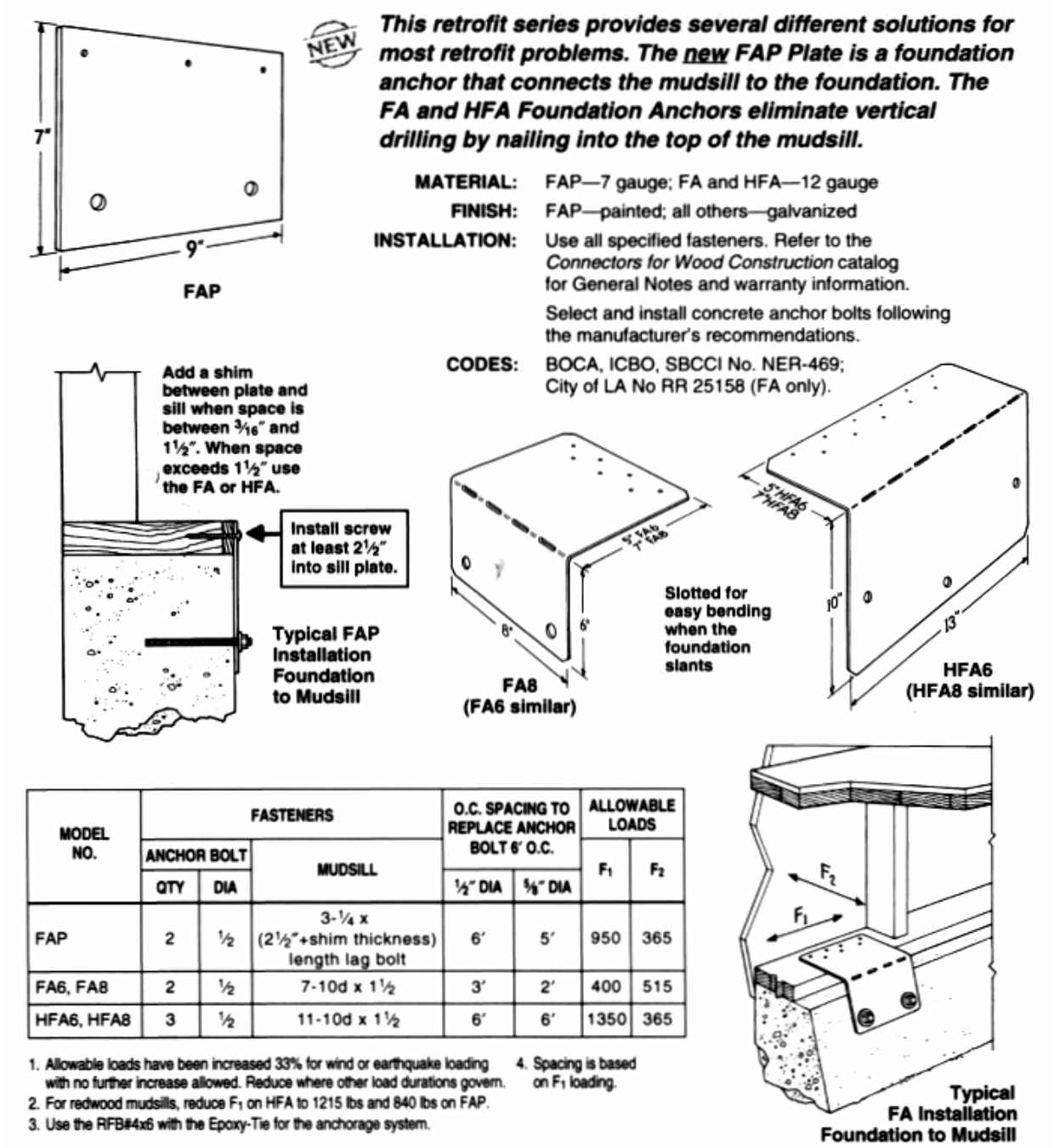

MODEL NO.	FASTENERS			O.C. SPACING TO REPLACE ANCHOR BOLT 6' O.C.		ALLOWABLE LOADS	
	ANCHOR BOLT		MUDSILL			F_1	F_2
	QTY	DIA		½" DIA	⅝" DIA		
FAP	2	½	3-¼ x (2½"+shim thickness) length lag bolt	6'	5'	950	365
FA6, FA8	2	½	7-10d x 1½	3'	2'	400	515
HFA6, HFA8	3	½	11-10d x 1½	6'	6'	1350	365

1. Allowable loads have been increased 33% for wind or earthquake loading with no further increase allowed. Reduce where other load durations govern.
2. For redwood mudsills, reduce F_1 on HFA to 1215 lbs and 840 lbs on FAP.
3. Use the RFB#4x6 with the Epoxy-Tie for the anchorage system.
4. Spacing is based on F_1 loading.

Figure 5 Sample manufacturer's sheet for anchor side plates. Carefully review material requirements in the General Notes (Applicant Plan - Sheet 1) to verify that the hardware meets the allowable loads specified in the plan (F1 at least 850 for ½ inch bolt). Closer spacing is required for hardware with lower allowable load values in order to meet plan requirements.

Step 2. Review the material information in the General Notes on the Applicant Plan (Sheet 1).

New anchors shall conform to ASTM A307. Existing anchors should not be severely rusted or corroded. All anchors shall have a minimum lateral load capacity of 635 lbs for ½ inch bolts and a minimum load capacity of 980 lbs for 5/8 inch bolts if installed in 2000 psi concrete at the minimum edge distance and depth of embedment. All proprietary anchors shall have current International Conference of Building Officials (ICBO) or equivalent approval. The size and spacing of all anchors used must meet the minimum prescriptive requirements in the SHER Plan (Table 1).

There are two primary types of anchor used to attach the sill plate to the underlying foundation wall: the expansion bolt and the chemical anchor. The expansion bolt is a mechanical fastener placed in hardened concrete designed to expand in a self-drilled or pre-drilled hole of a specified size. When tightened, the bolt engages the sides of the hole in one or more locations to develop shear and/or tension resistance to applied loads without grout, adhesive or drypack (Fig. 6).

A chemical anchor is a threaded rod fastener that derives its holding strength from a chemical adhesive compound placed between the wall of the hole and the embedded portion of the anchor. Chemical anchor compounds are organic compounds comprised of resin and hardener, that form adhesives when blended together. Examples of adhesive compounds include epoxies, polyurethane, polyesters, methyl methacrylate and vinyl esters.

Chemical anchors or expansion bolts may be used interchangeably in concrete of average or better quality. Concrete of weaker quality may be indicated by spalling during drilling or setting of expansion bolts or failure of anchors to reach the minimum torque required. Chemical anchors must be used in weaker quality concrete. This requirement does not waive the need to replace existing concrete foundations when damaged, deteriorated, or of unsuitable quality.

Figure 6 Mechanical anchor bolts for connecting the sill plate to the foundation wall. Note that square washers are required. (Photo from Ben Emam, Amazon.com)

Step 3. Review the installation information on the Applicant Plan - General Notes (Sheet 1).

Expansion bolts and chemical anchors must be embedded at least 4 inches vertically into the concrete foundation. Expansion bolts and chemical anchors installed horizontally to attach a side plate to the foundation wall must not penetrate more than 2/3 the thickness of the stem wall or generally about 3 inches. Follow the manufacturer's installation requirements. The drilled hole must be of the correct diameter and cleaned before insertion of anchor or bolt. Concrete dust in the hole may prevent the anchor bolt from being completely installed. Expansion bolts must be properly tightened to set the expanding portion of the assembly. The concrete must be able to engage the expanding portion without cracking.

Table 1 summarizes the minimum requirements for anchors and identifies the size and spacing for bolts and plates on the basis of the number of stories above the sill plate. Where obstructions (such as pipes or ducts) prevent the installation of bolts, the distance between bolts in the remainder of the sill must be reduced in order to provide the minimum number of bolts for the full length of the wall. However, do not install bolts closer than 12 inches on center. Table 1 (page 3) is also included in the permit application packet on the Applicant Plan (Sheet 1) (General Notes).

Manufactured expansion bolts, chemical anchors, and anchor side plates must be installed in accordance with the manufacturers' requirements. The size and spacing must meet the minimum prescriptive requirements listed on Table 1 on page 3.

End of Task 3

Task 4. Select method of strengthening the pony walls.

Pony walls are extremely vulnerable to earthquake damage unless they are properly strengthened. Most pony walls are constructed as wood-framed stud walls with some form of exterior sheathing and some lateral bracing. Homes built in Washington before 1975 generally do not have pony walls adequately strengthened to prevent earthquake-induced damage. Some homes built as recently as 1985 may have inadequately strengthened pony walls. Without proper strengthening, pony walls may collapse due to excessive movement of the floor above the pony wall in response to earthquake shaking. This movement is called “side sway” (Fig. 7) and reflects the use of materials lacking sufficient strength and stiffness to resist the back and forth movement of the ground underneath the home. Figure 8 shows a pony wall that has not been strengthened with structural panels to prevent excessive side sway.

The SHER Planset requires that pony walls be strengthened with structural panels to form a shear wall that will resist the excessive movement that can occur when earthquake shaking moves the home back and forth (Fig. 9). The foundation tends to move with the ground. The overlying building tends to lag behind the ground movement, displacing the home relative to the underlying foundation wall. Anchor bolts will help hold home to the foundation. However, they will not prevent the collapse of the pony wall. Structural panels bolster the pony wall's strength and stiffness to resist that collapse.

Pony walls on houses built before the early 1950s may have horizontal siding installed directly on the pony wall studs (on the exterior side). Others may have "let-in" diagonal braces (typically 1 inch x 4 inch) in addition to the siding. Neither of these have sufficient strength and stiffness to resist earthquake-induced collapse of the pony wall. However, 1-inch individual boards laid diagonally across the face of the pony wall studs will provide adequate strengthening if the boards are nailed to each stud they cross and to the top and bottom plates.

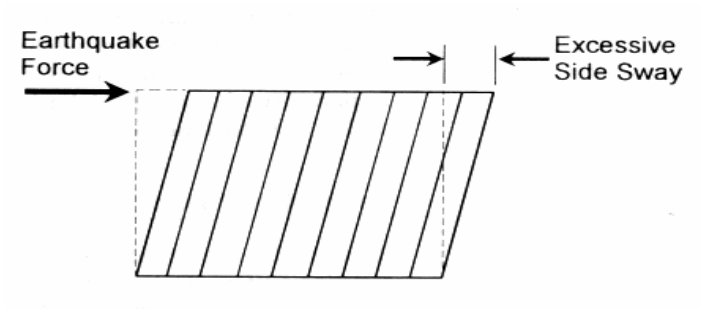

Figure 7 Illustration of the movement of a sample wall section in response to earthquake shaking. The displacement of the wall is called side-sway.

Figure 8 Pony wall without structural panels to strengthen the wall to prevent excessive side sway that may lead to collapse of the wall. Note the sill plate is embedded into the foundation wall. (Photo by Linda Noson, AGRA Earth & Environmental)

Figure 9 A structural panel installed to strengthen the pony wall to preventthe wall from collapsing, causing the home to fall off the foundation. (photo from Ben Emam, Amazon.com)

Step 1. Select the applicable pony wall strengthening detail(s) from the Plan Detail Reference – Sheet 2 – Plan Details 2a, 2b, 2c, and 2d.

Four plan details are provided showing how to install structural panels to strengthen the pony wall (Details 2a, 2b, 2c, 2d). Determine which wall sections require the installation of structural panels and assign the appropriate detail numbers "2a", "2b", "2c", or "2d" to those locations on your scaled foundation outline. These details are most appropriate for a home with a crawlspace or basement with unfinished walls. There will be an additional expense and effort required to install pony wall bracing in finished basement areas. The finishing will need to be removed and replaced.

Detail 2a shows the installation detail for a home in which the sill plate is the same width as the studs in the pony wall (Fig. 6). This detail shows that the structural panels can be nailed directly to face of the sill plate and the face of the pony wall.

Detail 2b shows the installation detail for a home in which the sill plate is wider than the studs in the pony wall or the sill plate is embedded in the foundation (Fig. 4, Fig. 8). Blocking the full width between the studs in the pony wall is required to provide a surface to which the lower edge of the structure panels are nailed. This added blocking must be nailed to the existing sill plate below.

Detail 2c shows how to install structural panels on the exterior face of the pony wall studs. The existing exterior sheathing should be carefully removed and the wall repaired after installation of the panels. This approach may be practical where the interior face of the pony wall is not easily accessible, such as in a finished basement. If a thicker structural panel is used to provide a flush wall surface, then care must be taken to use the appropriate sized nails to ensure the same wall strength will be achieved as for the prescribed panel thickness and nailing.

Detail 2d shows how to shape the cutouts and notching to accommodate existing features like vents, wiring, conduits, and piping (Fig. 10); how to estimate the additional length of structural panel needed to make up for what was removed; and how to install blocking to permit proper panel edge-nailing at cutouts.

Figure 10 Refer to the Plan Detail Reference sheet (Plan Detail 2d) to determine how to cut-out a section of the structural panel to accommodate piping, etc. (Photo from Ben Emam, Amazon.com)

Step 2. Review the material information on the Applicant Plan (Sheet 1), General Notes

The SHER Planset requires that you use a nominal ½ inch or 15/32 inch wood structural panel rated as APA Rated Sheathing or APA Structural 1 Rated Sheathing or an equivalent rated by another trade association. The structural panel must be classed as Exposure 1 for durability and have a span rating of 32/16. Plywood and Oriented Strand Board (OSB) are both types of wood structural panels. Whichever one is used must meet these specifications.

When using plywood, a structural panel with a minimum of 4 plys is recommended. Plywood structural panels labeled CDX refer to grade-C and grade-D veneer with Exposure 1 durability. CDX plywood that meets the prescribed thickness, span rating, and number of plys may be used to strengthen the pony wall.

Structural panel products should be protected from moisture if stockpiled in a location exposed to moisture for a long period of time. Otherwise, loss of strength may occur.

The meaning of the ratings marked on APA-trademarked labels stamped on wood structural panels are discussed below. Structural panels rated by other trade associations may be substituted provided they have characteristics equivalent to the APA ratings. Wood structural panels include both plywood and Oriented Strand Board (OSB).

Wood Species All structural panels, also called sheathing, shall be graded under the United States Voluntary Product Standard PS 1-95 or PS 2-92. These standards divide over 70 species of wood into five groups on the basis of strength and stiffness. The Group number that appears in the trademark of wood rated by the APA-The Engineered Wood Association is based on the species of wood used for the face and back veneers. Commonly the type of face and back veneer in the structural panel is marked on the panel label rather than the group number. Structural panels to be used to strengthen pony walls should be faced with grade-C veneer and backed with Grade-D veneer or better.

Durability Structural panels are graded for durability into four classes: Exterior, Exposure 1, Exposure 2, and Interior. The exposure class is defined by the glue bond used to hold the panel layers together. Exterior panels are glued to withstand permanent exposure to the weather or to moisture. Exposure 1 rated structural panels have a fully waterproof bond and may be used where temporary, but not permanent, exposure is expected. Exposure 1 rated structural panels may be used to strengthen pony walls in the crawl space and basement area. When used on the exterior, Exposure 1 structural panel may be used because the panel will generally be covered with building paper and finish siding so that it will not be permanently exposed to the weather. An Exposure 1 structural panel is commonly called CDX, which indicates both the species veneer (grade-C/grade-D) and the exposure durability (X). CDX is not equivalent to an Exterior panel and should not be used in areas that will be permanently exposed to the weather.

Intended Use Structural panels may also be graded based on the intended use, including wall sheathing, flooring, or siding. For pony wall strengthening, use structural panels graded for wall sheathing. APA Rated Sheathing Exposure 1 or APA Structural 1 Rated Sheathing meet the minimum prescriptive requirements in the SHER Planset. Equivalent ratings by other trade associations may be substituted. Note that APA Structural 1 Rated Sheathing provides about 10% greater shear strength than APA Rated Sheathing for the same thickness of panel (280 pounds per foot compared to 260 pounds per foot when using common 8d nails).

Span Rating Span Ratings for rated structural panels denote the maximum recommended center-to-center spacing of supports, in inches, over which the panel should be installed. The span rating is presented as a fraction. The left-hand number indicates the maximum spacing of supports, in inches, for panels intended to be used for roof sheathing. The right-hand number indicates the maximum spacing of supports, in inches, for panels intended for wall sheathing. A span rating of 32/16 indicates that the maximum center-to-center spacing for pony wall studs, should not exceed 16 inches.

Number of Plys in Plywood The number of plys or wood layers in plywood structural panels varies. The number of plys available at a particular lumber store varies from store to store, depending upon how much is purchased at one time, local building practice, and the decision to carry stronger (more plys) panels. Tears of the inner ply in three-ply structural panels were observed after the Northridge earthquake. The minimum prescriptive requirements for strengthening pony walls in the City of Los Angeles and the City of San Leandro calls for a minimum of 5-plys (Fig. 11). The SHER Planset recommends 4-ply or greater. In some cases, it will be easier to obtain, and less expensive, to use 5-ply plywood, depending upon local availability. Call more than one lumber yard or home repair store in an area to check on availability and cost.

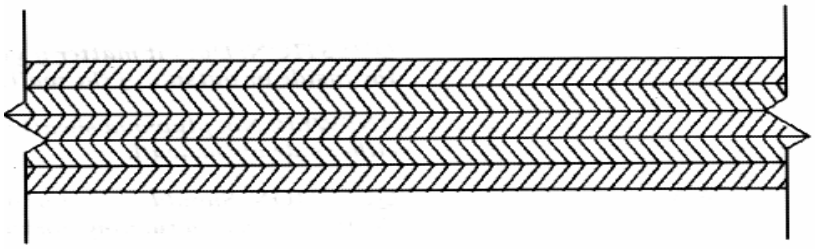

Figure 11 Example of a plywood structural panel with five-plys of wood.

Oriented Strand Board (OSB) Wood structural panels may also be made from cross-oriented layers of wood strands produced in mats. This layered mat wood product is called Oriented Strand Board or OSB. The mat layers are bonded with fully waterproof adhesives and may also have sealant on the panel edges. APA-The Engineered Wood Association rates OSB for intended use according to the same system used for plywood. Therefore, OSB with the trademark APA Rated Sheathing is intended for use in shear walls. OSB is also rated for durability using the exterior and exposure 1 classifications discussed above and the same span rating system. The minimum prescriptive requirements specify structural panels of nominal ½ inch or 15/32 inch thickness. Some lumber stores only keep the thinner, and unacceptable, 7/16 inch thick OSB in stock. It may be cheaper to use plywood of minimum thickness that is in stock rather than pay extra costs for thicker OSB that may be in stock or for special ordering.

Remember, structural panels, including OSB, should be protected from moisture if stored outside for periods of time before installation.

Nails To achieve the appropriate shear strength, you must use 8d common nails with a minimum shank diameter of 0.131 inch to fasten your structural panels to the pony walls. Nails with a smaller shank diameter, such as 8d box nails, will not provide the minimum strength required in the prescriptive plan.

Step 3. Review the installation information on the Applicant Plan Sheet, General Notes

You must install structural panels to strengthen pony walls on each pony wall section according to the Summary of Minimum Prescriptive Requirements on Table 1, page 3 (also included in the General Notes on the Applicant Plan sheet). To determine how much of the pony wall must be covered with structural panel, refer to the appropriate row on Table 1 (one-story, two-story, or three-story). Remember that a pony wall over 18 inches high must be treated as a story. A home with one-story and a 24 inch pony wall must be anchored and strengthened as a two-story home.

> The amount and location of wood structural panels needed to strengthen the pony wall must meet the requirements specified on Table 1 (page 3). When physical conditions, such as large window openings, prevent the installation of the required amount of wood structural panel, design assistance from an engineer or architect may be needed.

Identify the following information in order to determine the structural panel layout to be marked on the foundation outline completed in Task 1:

(a) how much of the pony wall area that must be strengthened,
(b) the minimum required length of each structural panel to be installed, and
(c) where the structural panels must be placed to achieve the required panel spacing for each wall section.

On the scaled foundation outline, show the location and spacing of all the required structural panels that you will install in your retrofit. When structural conditions prevent the installation of the required number and size of structural panels according to the prescriptive plan, you will need to prepare an alternate structural layout plan.

Fasten structural panels with 8d common nails at 4 inches on-center at all edges and at 12 inches on-center at intermediate supports. Two nails minimum should be driven into each stud. Nails should be driven so that the top of the nail is flush with the surface of the structural panel. The nail head should not be left above the surface of the panel because it can cause problems during finishing. The nail head should not be driven into the structural panel too deeply or too close to the edge (Fig. 12). Overdriven nails will reduce the shear strength of the panel by reducing the effective thickness and allowing the panel to buckle more easily when stressed. If nails are installed too close to the panel edge, that may allow the nail to pull through the panel during earthquake shaking. Install nails a minimum of ½ inch from the edge of existing studs, and where this dimension cannot be met, add a new stud adjacent to the existing stud. Screws should not be substituted for nails. Screws lack the flexibility of nails and may shatter rather than yield under shaking. For similar reasons of potential brittle failure, glue should not be substituted for nails.

A 1/8 inch gap should exist at vertical joints between structural panels to allow for product expansion.

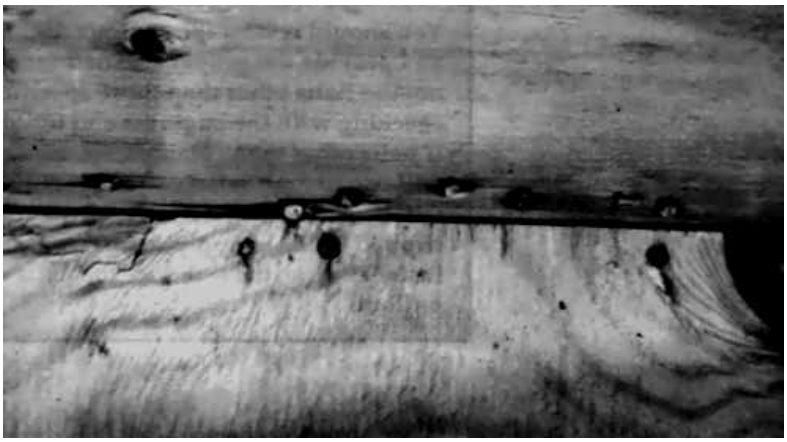

Figure 12 An example of overdriven nails and nails too close to the panel edge. Nails should be driven flush with the surface of the structural panel.

Exercise to determine the amount of sheathing needed to strengthen the pony wall.
This exercise focuses on determining the amount and spacing of structural panels needed to strengthen the 39- foot-long pony wall segment shown on the right hand side of the Sample Plan on the Applicant Plan (Sheet 1). The Sample Plan is for a home with one-story above the pony wall and a pony wall of varying height.

Step 1. Refer to the foundation outline to determine the height of the pony wall. The foundation outline in the Sample Plan shows this pony wall to be 24 inches high. Therefore, the pony wall must be counted as one-story for the purpose of determining how much structural panel is needed to strengthen the pony wall. Therefore, that side of the home should be strengthened using the minimum prescriptive requirements for two-stories.

Step 2. Summary of Minimum Prescriptive Requirements (Table 1, page 3; also on the Applicant Plan) Select Row 2 for requirements for a two-story home. Then, look under the column titled "pony wall strengthening requirements for individual wall sections" to identify the percentage of the wall that must be braced.

The table tells you that:

- At least 70% of the wall length shall be strengthened.
  70% of the 39-foot-long wall shown on the Sample Plan is about 27 feet; therefore, at least 27 linear feet of structural paneling must be installed on this portion of the foundation wall.
- Structural panel lengths shall be equal to twice the height of the pony wall but *never* less than 48 inches.
  The pony wall height is 24 inches. Therefore the minimum length of each plywood panel must be twice that, or 48 inches (4 feet).
- Structural panels shall be installed at each end of the wall section.
  A 48-inch-long panel is shown installed at each end of the 39-foot wall on the Sample Plan. So far, a total of 8 linear feet (96 inches) of structural panel has been placed on the pony wall. Thus, the location of the remaining roughly 20 feet of the total strengthening requirement of 27 feet now must be marked on the foundation outline. Three 5 feet 4 inch panels and one 4 feet panel would meet the remaining requirements.
- Structural panels shall be nearly equal in length and nearly equally spaced along each wall section.
  The exact layout will depend upon conditions along the wall. Installing a longer section of structural panel where the underfloor access opening is marked on the foundation outline would provide additional strength where the foundation wall has a gap.

Additional explanations for this exercise.

- The panels marked on the foundation outline are not all the same length as required in the minimum prescriptive standards. This is acceptable in order to accommodate actual field framing conditions and minimum percentage panel requirements. The panels must be only *nearly* equal in length and *nearly* equally spaced along the wall.

- The 12-foot-long wall at the bottom left of Sheet 1 of the SHER Planset is braced with two 4-foot -long panels. This far exceeds the 50% strengthening requirement for that wall. However, because the prescriptive standard requires installation of at least one panel of minimum length at the end of each wall section at the corners of buildings, the amount of structural panel shown placed along the pony wall is correct.

- The length of perimeter wall obstructions must be included when calculating the total length of structural panel required. For example, a wall that has 30 feet of pony wall and 10 feet of brick fireplace foundation is considered to be 40 feet in length. If it is supporting a one-story house, strengthening would be required along 20 feet of the pony wall or 100 percent of the available wall. Openings in the perimeter foundation wall greater than ten feet may require installation of new sections of foundation wall.

End of Task 4

Task 5. Select the method for connecting the floor framing system to the pony wall or foundation wall

The floor framing system needs to be connected to the underlying pony wall. If there is no pony wall, the framing system needs to be connected to the sill plate. Lack of these connections may result in movement of the house off the pony wall or the foundation wall.

Step 1. Select framing connection detail from the Plan Detail Reference Guide – Sheet 2: Plan Details 3a and 3b

The Plan Detail Reference (Sheet 2) shows framing connections between the floor framing system and the underlying sill plate or pony wall. Plan Detail 3a applies when the floor joist is perpendicular to the foundation wall. Plan Detail 3b applies when the floor joist is parallel to the foundation wall. No framing clip is required between the rim joist or joist blocking and the overlying flooring. It is assumed that some nailing was installed in this area during the original construction. Verification of the nailing in this area would be expensive and installation difficult. While not required according to the SHER Planset, those involved with homes with more that two stories may want to try to confirm whether or not the flooring is adequately nailed to the underlying rim joist or joist blocking.

A number of variations exist in conditions between the floor framing system and the underlying foundation wall or pony wall. Plan Details listed below address common variations from characteristics of homes qualifying to use the prescriptive plan. These additional details are in Appendix D. The building official will need to determine if your use of one of these details provides an adequate solution for your home

- Plan Detail 3a-1.1a,b,c – There is no blocking between the floor joists of a cantilevered floor section at the point where the joists rest upon the pony wall or sill plate. This plan detail shows the installation of new joist blocking to provide a place to attach the framing clip.

- Plan Detail 3b-1.1a,b - There are no pony wall top plates and the perimeter rim joist rests directly on top of the studs in the pony wall. (LA2a,2b; Plan Detail 4b-1.2)

- Plan Detail 3b.2 – Parallel floor joists are too close to the sill plate or pony wall to allow access for the installation of framing clips.

Step 2. Review the material information on the Applicant Plan Sheet, General Notes.

All framing clips shall be of minimum 18 gauge galvanized steel, of 4-1/2 inch length and approved under ICBO or equivalent for wood frame construction. The earthquake load capacity in the long direction must meet or exceed 450 lbs in dry lumber (Fig. 13). The fasteners must be 12-8d common by 1-1/2 inch nails unless other wise approved.

Number 6 by 1-1/2 inch flat head wood screws may be used at existing rim joist, blocking or top plate connections.

Step 3. Review the installation information on the Applicant Plan Sheet, General Notes.

The standard plan requires that you install metal framing clips at regular intervals along the perimeter of the underfloor framing system. The distance between clips depends upon the number of stories (Table 1, p. 3). All metal connections and hardware must be installed as instructed by the manufacturer and in accordance with the requirements of these retrofit standards. The retrofit standard for spacing the framing clips ranges from a maximum of 32 inches on center for a one-story home to a maximum 16 inches on center for a three-story home (Table 1). In most one-story homes this means that one framing clip will be installed between every other floor joist bay. You will need a tape measure and marker to lay out this spacing when the floor joist is parallel to the foundation wall because there are no floor joists resting on the sill plate or pony wall to use as a guide.

The framing clips should be nailed to the top of the sill plate or pony wall and to the face of the continuous rim joist or joist blocking with 8d, 1½ -inch-long joist hanger nails. Nails longer than 1½ inches should not be used to fasten the clips to the sill plate because they will hit the concrete below the sill plate and may not create a solid, proper clip connection.

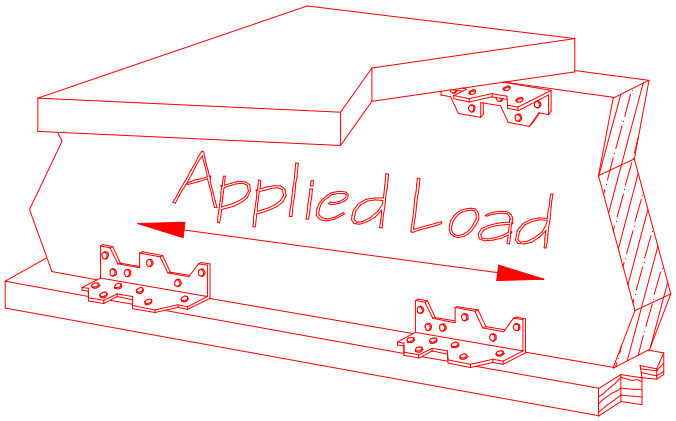

Figure 13 Illustration of a framing clip installed between the floor framing system and the underlying sill plate. The applied load generated by the force of the earthquake along the clip's long direction is marked. The upper framing clip is not required by the SHER Plan.

Most houses have a continuous rim joist ranging in size from a nominal size of 2-inch-by 6-inch to a size of 2-inch by 10-inch located at the outside edge of the floor framing system. Other houses may have full depth 2x blocking between the floor joists. The framing clips may be nailed directly to a continuous rim joist or the 2x blocking. If there is no continuous rim joist or no full depth joist blocking, you must install 2x blocking or structural panel sheathing between the joists to provide a place to attach the framing clips. The retrofit standard for installing joist blocking or sheathing ranges from installation between alternate joists for a one-story home to installation between all joists for a three-story home (Table 1, page 3.)

All nail holes in the framing clips must be used in order to develop the load capacity required by the retrofit plan. Because of space limitations in this area of your home's floor framing system, you will need to use a special nailing tool such as a "palm nailer" to properly install this retrofit hardware.

REVIEW OF THE STEPS FOR COMPLETING AN EARTHQUAKE RETROFIT PLAN

You first complete the Home Assessment Checklist to determine if your home qualifies to use the SHER Planset and to identify the general type of retrofit work that must be done before developing a detailed earthquake retrofit plan for your home retrofit project.

You then use this guide to

(1) Draw your Earthquake Retrofit Plan in the space provided on the Applicant Plan (Sheet 1) in the permit application packet and mark the scale used,

(2) Select the Plan Detail reference numbers and the structural panel layout and mark them on your foundation outline

(3) Make a note about the materials you will use to implement each plan detail

Your completed earthquake retrofit plan will address all of the following elements in the standard plan **that apply to your building's condition:**

- repairing or replacing damaged parts of the foundation
- anchoring the sill plate to the underlying foundation wall with anchor bolts or anchor side plates
- strengthening the pony walls with structural panels
- connecting the floor framing to the underlying sill plate or pony wall using framing clips

Make sure you have followed the "Sample Plan" shown on the Applicant Plan (Sheet 1) as a guide for the preparation of your earthquake retrofit plan. The foundation outline you drew in Task 1 should be annotated with the appropriate information and plan details to address the conditions that exist in the home to be retrofit. Transfer your earthquake retrofit plan to the space provided on the Applicant Plan (Sheet 1) if you drew it on a separate sheet of paper.

You are ready to submit your completed earthquake retrofit plan to the building department for plan review and processing of your permit.

OBTAINING A BUILDING PERMIT AND FINISHING THE PROJECT

You must have a building permit before you retrofit your home. The permit process ensures that the proposed plan is reviewed and that installation has been performed in accordance with the voluntary minimum prescriptive requirements in the SHER Planset.

Once you have completed the Applicant Plan (Sheet 1) in the permit application packet, take two copies of both the Applicant Plan (Sheet 1), the Plan Detail Reference (Sheet 2), and the Home Assessment Checklist to the building department. Many copy stores have equipment to copy large size sheets of paper. Department staff will review the Home Assessment Checklist and your Earthquake Retrofit Plan. They may ask questions about the project to make sure that no critical issues have been overlooked. When the building permit is issued, you will receive an approved copy of your earthquake retrofit plan.

Building Permit Issuance

If your Earthquake Retrofit Plan on the Applicant Plan (Sheet 1) and your attached plan details are in order, the sheets will be stamped approved and a building permit issued upon payment of the required fees. Fees for an earthquake retrofit project permit are based on the value of the project. Fees for earthquake retrofit projects are generally around $200. A home that requires additional work to improve poor existing conditions, such as installing a new foundation, may require higher permit fees to cover the more expensive and complex project. An "Inspection Record Card" will be provided for use by the building inspector.

Beginning Work

With the permit in hand, you, the homeowner, may decide to complete the work or you may choose to hire contractor. The permit is valid for 18 months in the City of Seattle.

Required Inspections

Have the project address and the permit number available and let the inspector know if it is for Project Impact-related bolting or pony wall bracing. Building department staff will visit your home twice to inspect the retrofit work. Generally one inspection will be completed after the anchor bolts are installed and one inspection after the pony wall bracing is installed. The contractor, or you as homeowner, if you are doing the work yourself, are responsible to call your district inspector when you are ready for these inspections. Inspection will focus on work-related to the earthquake retrofit project.

Additional Inspections

If unusual structural conditions or site problems are uncovered after work begins, and these problems necessitate additional field inspections by the building department, supplemental fees may be assessed to cover the cost of the additional inspections. The building department will advise you beforehand if this need arises.

APPENDIX A: Definitions of Common Construction Terms

Anchor side plate--A metal plate or plates used to connect the sill plate or floor framing to the side of a concrete stem wall when conditions prevent anchor or bolt installation vertically through the sill plate.

Chemical anchor--A fastener placed in hardened concrete that derives its holding strength from a chemical adhesive compound placed between the wall of the hole and the embedded portion of the anchor. Chemical adhesive compounds are organic compounds, composed of resin and hardener, that form adhesives when blended together. Examples of chemical adhesive compounds include epoxies, polyurethanes, polyesters, methyl methacrylates and vinylesters.

Composite panel--A wood structural panel product composed of a combination of wood veneer and wood-based material and bonded with waterproof adhesive.

Pony wall--A wood-framed stud wall extending from the top of the foundation to the underside of the lowest floor framing. Also called a cripple wall or knee wall.

Embedment depth--The depth of the anchor into the concrete prior to setting of the anchor.

Expansion bolt --A mechanical fastener placed in hardened concrete designed to expand in a self-drilled or pre-drilled hole of a specified size and engage the sides of the hole in one or more locations to develop shear and/or tension resistance to applied loads without grout, adhesive or drypack.

Installation torque--The minimum moment applied to a torque-set anchor that creates the degree of anchorage required for full load values.

Minimum concrete edge distance--The measure between the free edge of the concrete and the centerline of the bolt at which the concrete will not break away when the anchor is set or loaded in service. Minimum edge distances for anchors are given in the produce approval

Oriented strand board (OSB)--A mat-formed structural panel product composed of thin rectangular wood strands or wafers arranged in oriented layers and bonded with waterproof adhesive.

Perimeter foundation--A foundation system that is located under the exterior walls of a building.

Plan detail--An individual drawing of a specific portion of construction containing dimensions, notes, and other information necessary to guide the work to be done.

Plywood--A structural panel product composed of sheets of wood veneer bonded together and with the grain of adjacent layers oriented at right angles to one another.

Snug tight--The condition when the full surface of the plate washer is in contact with the wood member and begins to slightly indent the wood surface.

Torque-set anchor--An expansion anchor whose wedge or sleeve engages the concrete base material in the drilled hole by the application of torque and where the amount of torque applied controls the degree of anchorage.

Waferboard--A mat-formed wood structural panel product composed of thin rectangular wood wafers arranged in random layers and bonded with waterproof adhesive.

Wood structural panel--A structural panel product composed primarily of wood and meeting the requirements of United States Voluntary Product Standard PS 1 and United States Voluntary Product Standard PS 2. Wood structural panels include all-veneer plywood, composite panels containing a combination of veneer and wood-based materials, and mat-formed panels such as oriented strand board and wafer board.

APPENDIX B: Basic Concepts for Earthquake Resistant Design

Earthquake Shaking

When an earthquake occurs, the ground beneath a building shakes in all directions. How strong the shaking is at the building site and how much damage is produced depends on the following factors:

- **The "size" of the earthquake**. The size of an earthquake is usually described by either a number related to the amplitude of the recorded ground motion, called magnitude, or by a subjective description of the level of damage observed at a particular site, called the intensity. The initial magnitude reported by different earthquake centers may vary slightly due to differences in the recorded signals used to calculate the magnitude. These minor differences generally are resolved when measurements of recorded signals for a number of centers are combined. There are also different types of magnitude determined by measuring the amplitude of different parts of the recorded earthquake ground motion. The earthquake's magnitude will be reported as a single number. The magnitude is often used in equations to calculate the amount of energy released by the earthquake. The magnitude of an earthquake is similar to the number of watts used to indicate the strength of a light bulb.

  The intensity of an earthquake is measured using a scale of increasing numbers representing increasing levels of observed damage. Each earthquake will produce many different intensities. The intensity assigned to a particular event will represent the greatest amount of damaged observed, called the maximum intensity. The intensity of an earthquake is similar to the brightness of a light bulb observed at different locations relative to the bulb.

- **The depth of the earthquake**. A shallow earthquake will typically cause the most severe damage near the epicenter, which is the point on the Earth's surface directly above the earthquake's point of origin. A deep earthquake of the same magnitude will cause less damage near the epicenter because the point of origin is now farther from the surface, but it will typically cause damage over a larger area.

- **The distance of the building from the fault causing the earthquake**. A fault is a weakness in the Earth's brittle outer layer along which movement occurs. Sudden slip along a fault generates the shaking we call an earthquake. The distance to the place along the fault where slip occurred, called the hypocenter, is important in determining the resulting shaking. Buildings close to the fault will usually feel stronger shaking than those farther away.

- **The composition of the soil at the building site**. Hard, rocky or firm ground will tend to shake the most in response to rapid back and forth movements. A short, stiff building also shakes more strongly in response to rapid back and forth movements. Thus, a short stiff building like an Unreinforced Masonry building will typically sustain greater damage when shaken rapidly on a firm site. Soft sandy or clayey soil will tend to shake more in response to slower back and forth motions. A tall, flexible building shakes more strongly in response to slower ground motions. Thus, a tall, flexible building like a high rise will typically sustain greater damage when shaken more slowly on a soft site. This matching of ground motion to the natural period of vibration of the building producing stronger (amplified) motions is called resonance.

Building Forces

The size of the shaking generated in a building during an earthquake will depend upon the building's size and type of building materials as well as the ground accelerations produced by the earthquake's shaking. A large, heavy building will generate more force when set into motion by earthquake ground shaking than a small, light building. Force may be calculated by multiplying the building's weight times the ground acceleration caused by the earthquake's shaking.

During an earthquake the ground shakes back and forth. This causes forces to act on a building in all directions. The building's foundation tends to move with the ground. The overlying building tends to lag behind. This tendency of the building to lag behind the ground's motion is called inertia. Imagine a person in a speeding car. If the car stops suddenly, the person's inertia continues the forward movement of the body against the seat belt. If the car speeds up quickly, the person's inertial force resists the movement and the body is pressed into the seat as the car moves forward. An earthquake may repeat this sudden back and forth movement many times, weakening the building and possibly leading to collapse.

Building forces are greatest between the foundation and the first floor of the building. At this location the total weight of each overlying floor, walls and roof adds together, resulting in the highest level of force experienced by the building. This is also where the movement between the foundation and overlying building shifts back and forth relative to each other. For this reason, strengthening the connections between the foundation and the first floor of the building is the most important part of a home earthquake retrofit.

Horizontal Force Resisting System

Roof and floor systems are the horizontal elements of a house's earthquake force-resisting system. These horizontal elements are called diaphragms. The floor and roof systems transfer the horizontal, side-to-side earthquake forces to the vertical elements of a house (the walls) which, in turn, transfer the forces to the foundation and then the ground. This connected system allowing the transfer of forces through each building element to the ground is called the complete load path.

Weak walls do not do a good job of transferring the horizontal forces from the roof and floors to the foundation. Large picture windows, garage doors and other openings that weaken the ability of the wall to transfer the earthquake loads to the foundation may result in collapse of that floor. Also, inadequate materials and connections weaken the ability of the walls to transfer forces. These weaknesses can be especially damaging in the foundation area. Weak pony walls and inadequately bolted foundation sill plates are usually the most vulnerable to earthquake damage because they are located where the forces in the building are typically strongest due to the weight of the overlying structure and to the inertial movement between that structure and the foundation.

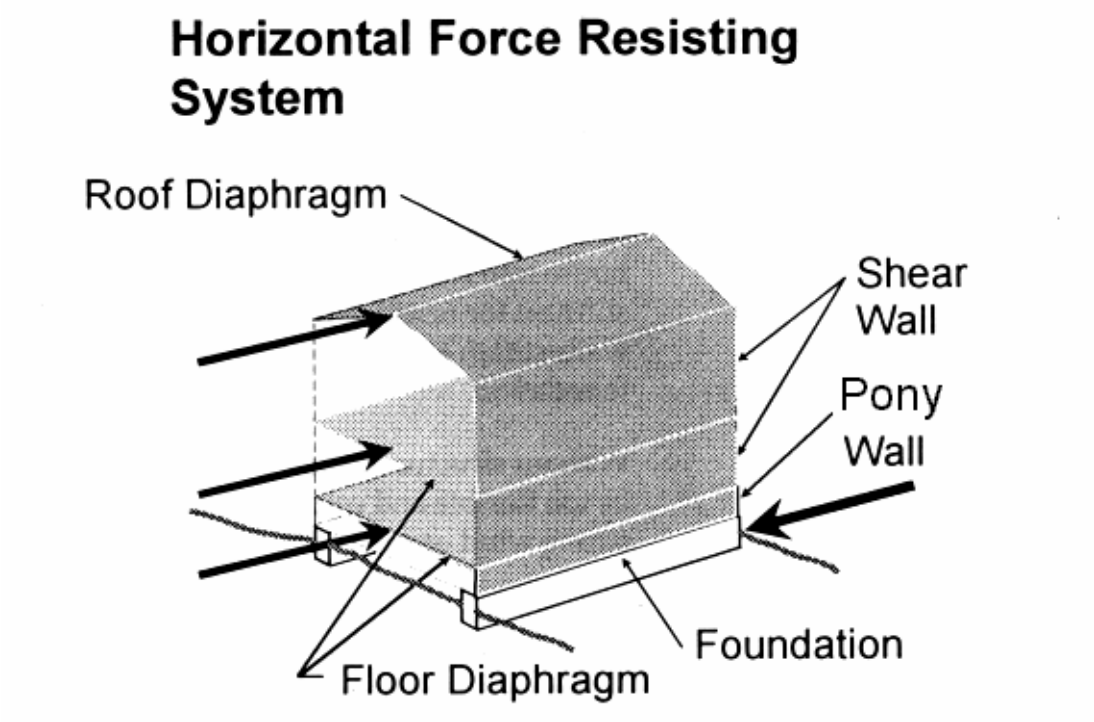

Need for Retrofit

Building code design requirements for earthquake resistance have improved dramatically in the last few decades, but there are many thousands of homes in communities throughout the Pacific Northwest that were constructed prior to the development of modern earthquake design requirements. These homes usually have hidden weaknesses in the foundation and pony wall areas that require strengthening in order for the structure to resist the potential forces of a major earthquake.

APPENDIX C – THE HAZARD ASSESSMENT CHECKLIST

Booklet 2 provides detailed instructions for completing the checklist. "Yes" answers to all questions indicates the home (1) qualifies to use the SHER Planset; (2) is adequately anchored and braced to resist earthquake ground shaking; and (3) is constructed of structural elements that are in good condition. Space is provided at the end of the checklist for you to enter comments related to questions answered "no" or "uncertain".

PART 1 – THIS SECTION TO BE FILLED IN BY THE HOMEOWNER			
1. Owner Name:	**2. Telephone Number:**		
3. Mailing Address:	**City**	**State**	**Zip Code**
4. Property Address (If different from above)	**City**	**State**	**Zip Code**
❑ **Owner Occupied** ❑ **Non owner occupied**			

PART 2 – Qualification Requirements

All answers to the questions in Part 2 must be yes or NA (not applicable) for your home to qualify to use the Standard Home Earthquake Retrofit Plan. You may need to hire an engineer or architect to develop the appropriate retrofit method if "no" or "uncertain" is checked.

Home Characteristics	**Yes or NA**	**No**	**Uncertain**
5. Is the home of light, wood-frame residential construction?			
6. Does the home have four or fewer dwelling units?			
7. Is the roof made of standard lightweight roofing materials, such as wood or composition shingle?			
8. Is the home built on a flat or moderate slope of less than 30 percent (approximately 18 degrees from horizontal)?			
9. Is the foundation wall around the perimeter of the home continuous except for allowable exclusions?			
10. Is the foundation of concrete or reinforced masonry that is in good condition?			
11. Are the pony walls 4 feet or less in height?			
12. Is the home three stories or less, including pony walls over 18 ½ inches as one story?			
13. Is a sill plate present?			
14. What is the overall height of the pony wall? **(Specify dimension.)**			
15. How many floors are above the pony wall (or above the foundation if there is not a pony wall)? **(Specify # of floors.)**			

PART 3 – Identify Retrofit Needs for Homes Qualifying to Use the Standard Plan "Yes" answers indicate no retrofit work is needed. "No" or "Uncertain" answers indicate retrofit and/or repair work is needed to improve the resistance of the home to earthquake shaking.			
Anchoring the Sill Plate	**Yes or NA**	**No**	**Uncertain**
16. Are sill plates in good condition?			
17. Are sill plates anchored (bolted) to the foundation?			
18. Are sill plate anchor bolts spaced 4 to 6 feet apart, placed near the center of the concrete foundation wall (about 2 ½ inches from the inside concrete edge of a 6 inch foundation wall), and in good conditions?			
19. Are sill plate anchor bolts at least ½ inch in diameter for one to two story buildings and 5/8 inch for a three-story building (½ inch bolts may be used in a three-story home if places 2 feet 8 inches apart)?			
20. Are sill plate anchor bolts located not more than 12 inches from the ends of each piece of sill plate more than 30 inches in length?			
Connecting the Floor Framing	**Yes or NA**	**No**	**Uncertain**
21. Are floor joists and either continuous rim joists or joist blocking present?			
22. Are pony wall double top plates present and in good condition?			
23. Is the floor framing system connected to the underlying sill plate with metal framing clips or are 8d nails placed 6 inches on center?			
24. Does the continuous rim joist rest on top of the pony wall studs?			
Strengthening the Pony Wall	**Yes or NA**	**No**	**Uncertain**
25. Do structural panels (also called sheathing) cover the stud walls on either the inside or the outside of the pony wall?			
26. Does existing pony wall sheathing in a crawl space have sufficient stud space ventilation to prevent the growth of fungus?			
27. Are the nails around the perimeter of the structural paneling spaced 3 to 6 inches apart?			
28. Are the nails along the studs spaced 6 to 14 inches apart?			
29. Are there screened ventilation holes in each structural panel located in the crawl space?			

Name of person who completed the Home Assessment Checklist (PLEASE PRINT)
Signature of person who completed the Home Assessment Checklist:
Date assessment completed:
Relationship of person completing the Home Assessment Checklist to the home retrofit project: (CIRCLE ONE) Owner Lessee Contractor Licensed Architect Licensed Engineer Owner's Agent

If a contractor completed the Home Assessment Checklist, please supply the following information. (The original license or a notarized copy will need to be provided when you apply for a building permit.)

Name	Address	Telephone	License #	Exp.Date
Company Name: Consultant Name:		Work Number: Home Number:		

Has the contractor completed an approved Home Retrofit Training Class?
_____ Yes _____ No

If yes, enter workshop date and location: _____

RESULTS of the Home Assessment Checklist (CHECK ALL THAT APPLY):
❑ Home qualifies to use the Standard Home Earthquake Retrofit Plan
❑ Home does not qualify to use the standard Home Earthquake retrofit Plan
❑ Home earthquake retrofit not needed
❑ Damaged or missing structural elements must be repaired or installed before completing the retrofit

COMMENTS

If you answered “no” or “uncertain” to any of the checklist questions, use this space to explain the problem and your proposed solution.

APPENDIX D – ADDITIONAL PLAN DETAILS

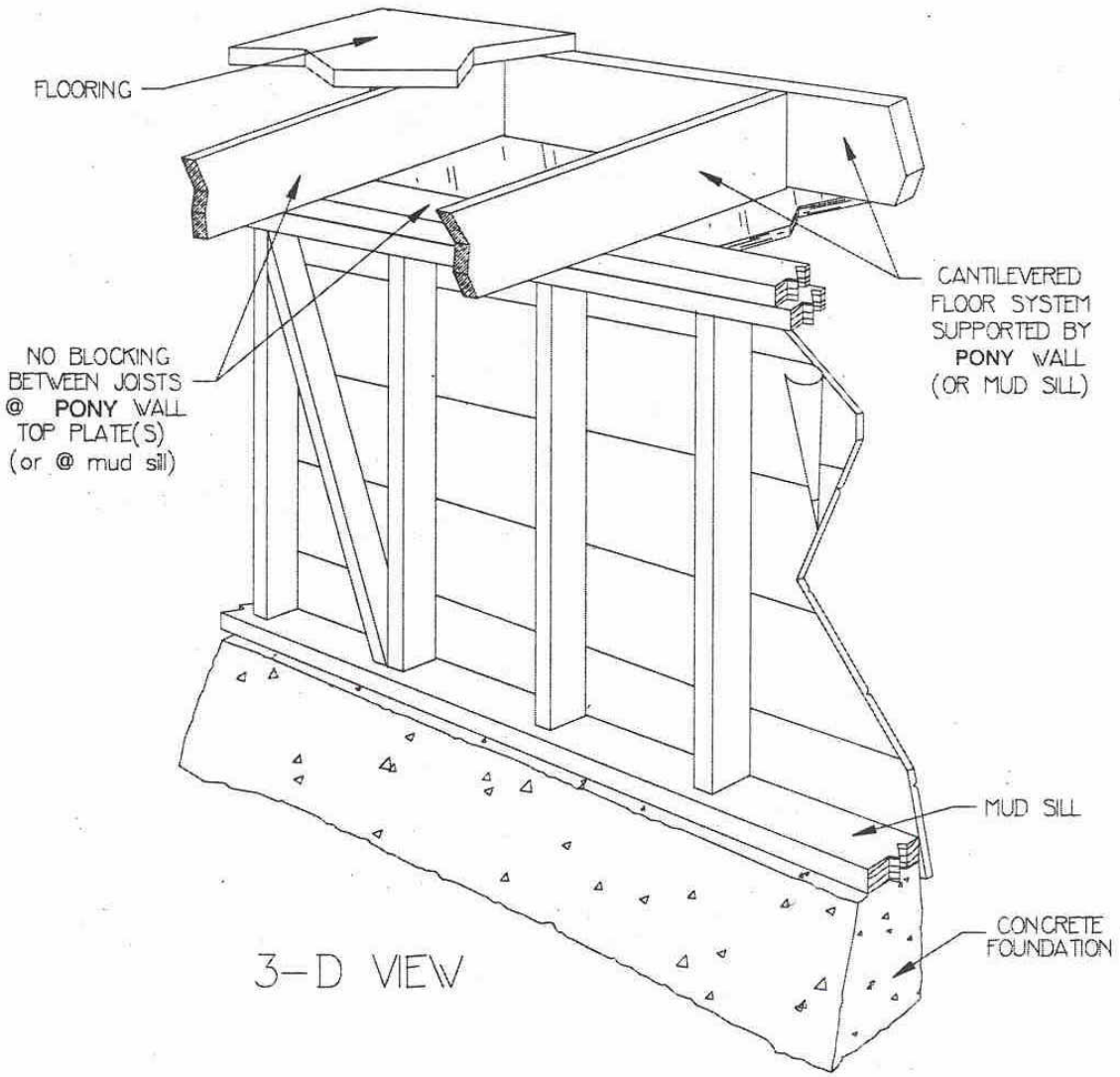

REPAIR CONDITION 3a-1

LACK OF BLOCKING ABOVE PONY WALL AT CANTILEVERED FLOOR

NO FRAMING ELEMENTS ON WHICH TO INSTALL FRAMING CLIPS

Framing modifications are necessary to provide the required nailing surfaces for the framing clips and to ensure connections that complete the load path between the pony wall and the floor system.

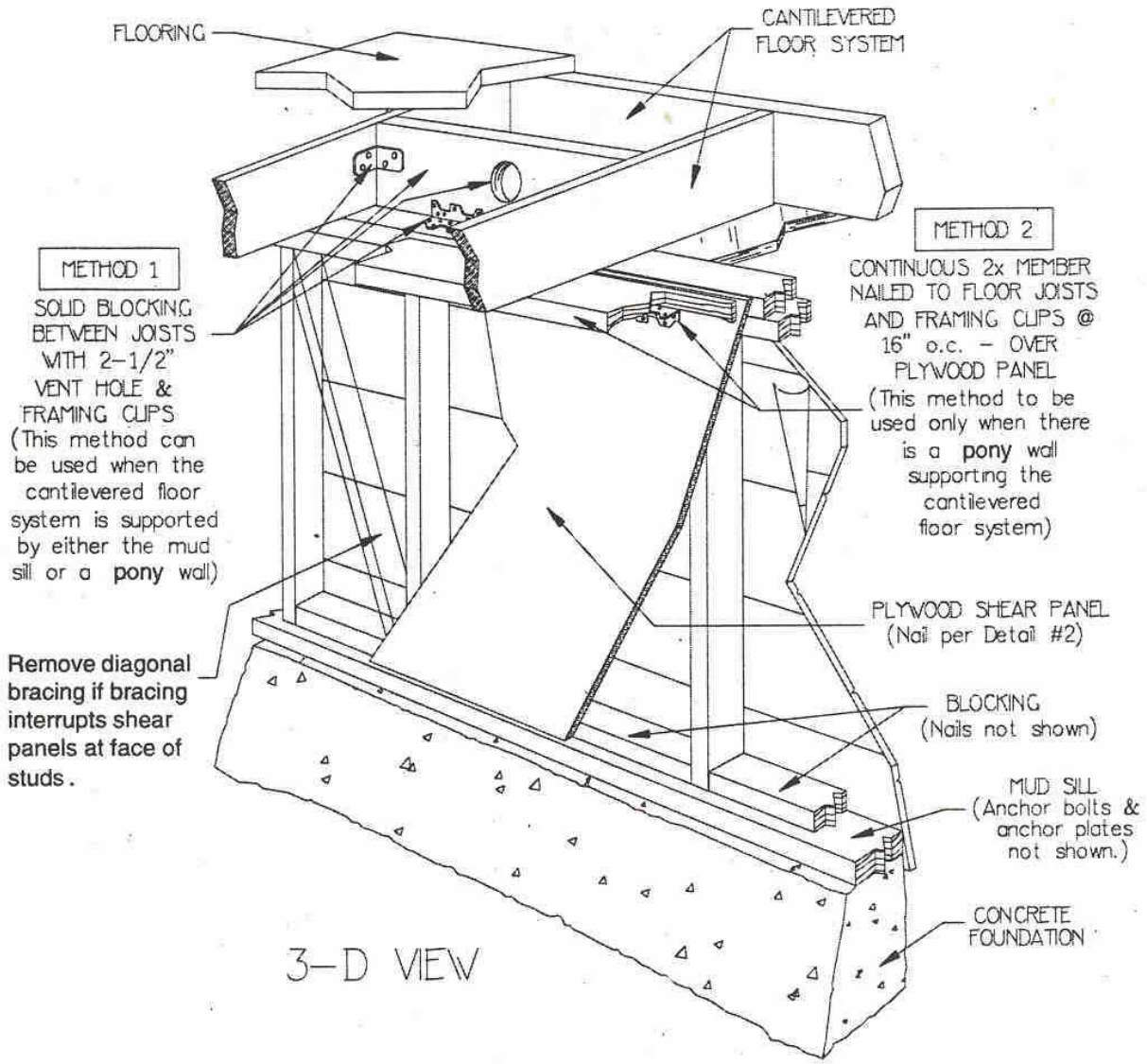

Plan Detail 3a-1.1a
[For use with the Project Impact
SHER Planset}

PLAN DETAIL SHOWING TWO METHODS FOR INSTALLING FRAMING CLIPS FOR A CANTILEVERED FLOOR WITH NO BLOCKING ABOVE PONY WALL
(Install solid blocking between joists - "METHOD 1"
or
install continuous 2x member - "METHOD 2")

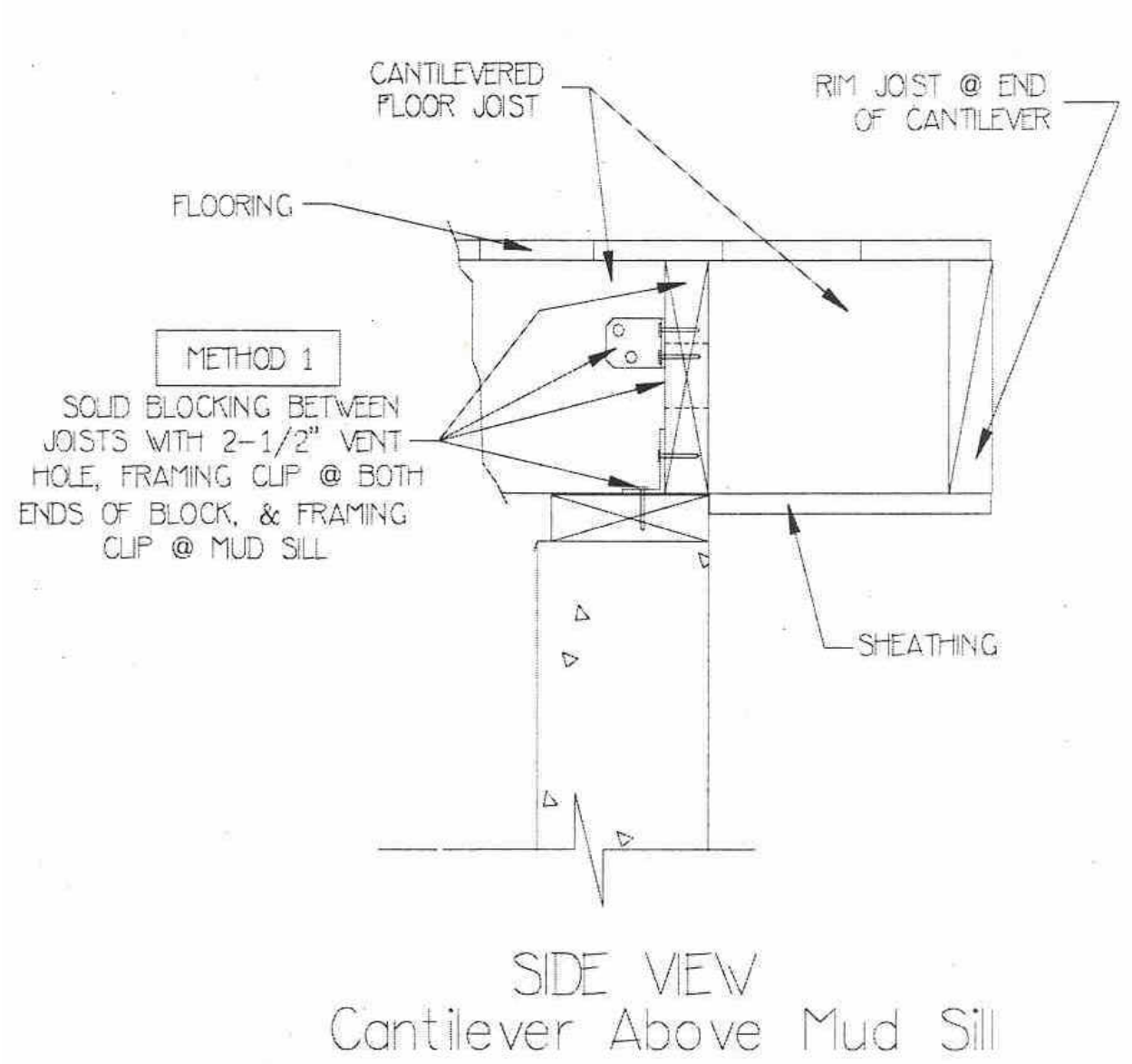

PLAN DETAIL 3a-1.1b
[For use with the Project Impact
SHER Planset]

REPAIR DETAIL FOR CANTILEVERED FLOOR WITH NO BLOCKING ABOVE SILL PLATE
(Install solid blocking between joists - "METHOD 1")

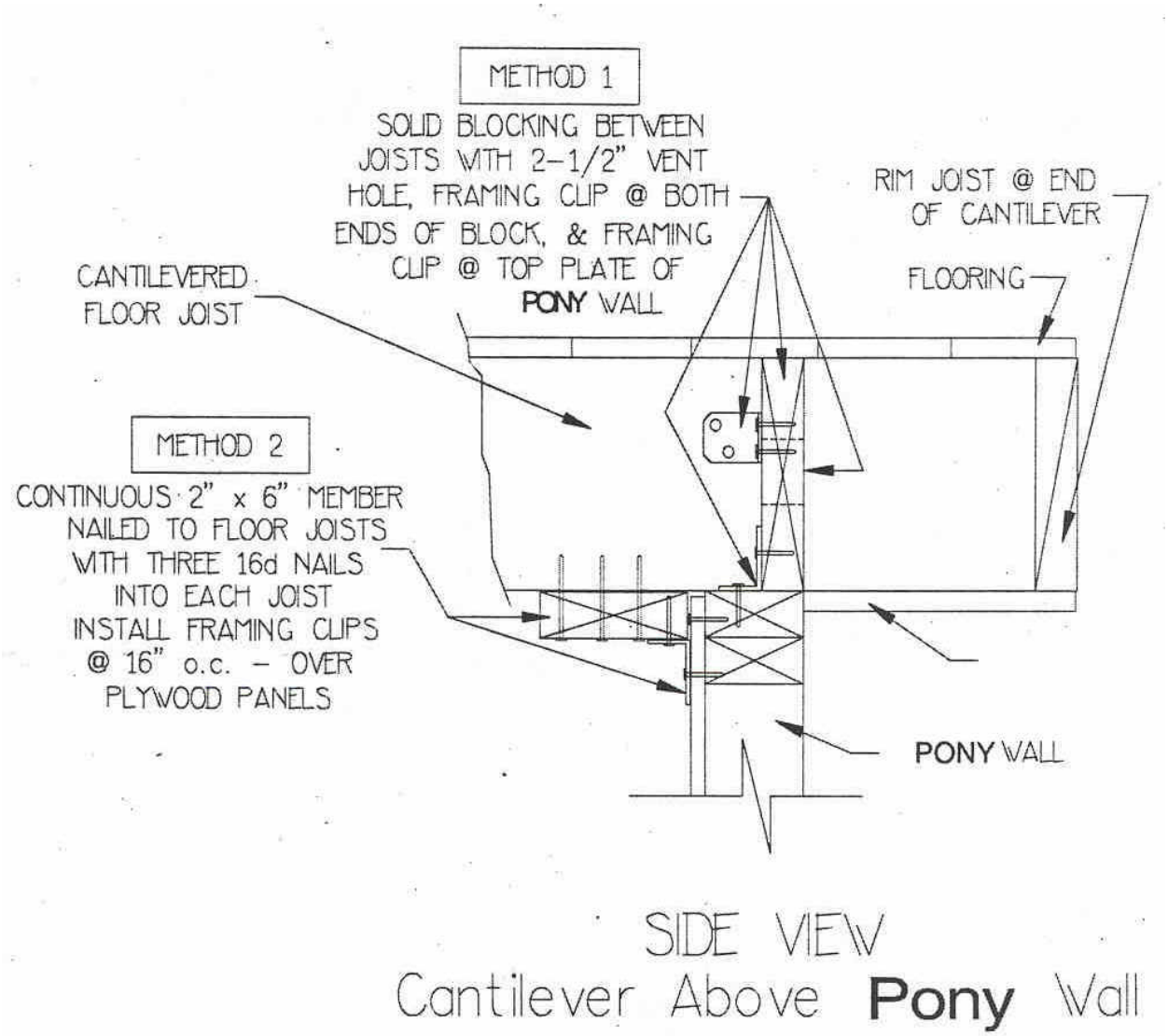

Plan Detail 3a-1.1c
[For use with the Project Impact
SHER Planset]

REPAIR DETAIL FOR CANTILEVERED FLOOR WITH NO BLOCKING ABOVE PONY WALL
(Install solid blocking between joists - "METHOD 1"
or install continuous 2x member - "METHOD 2")

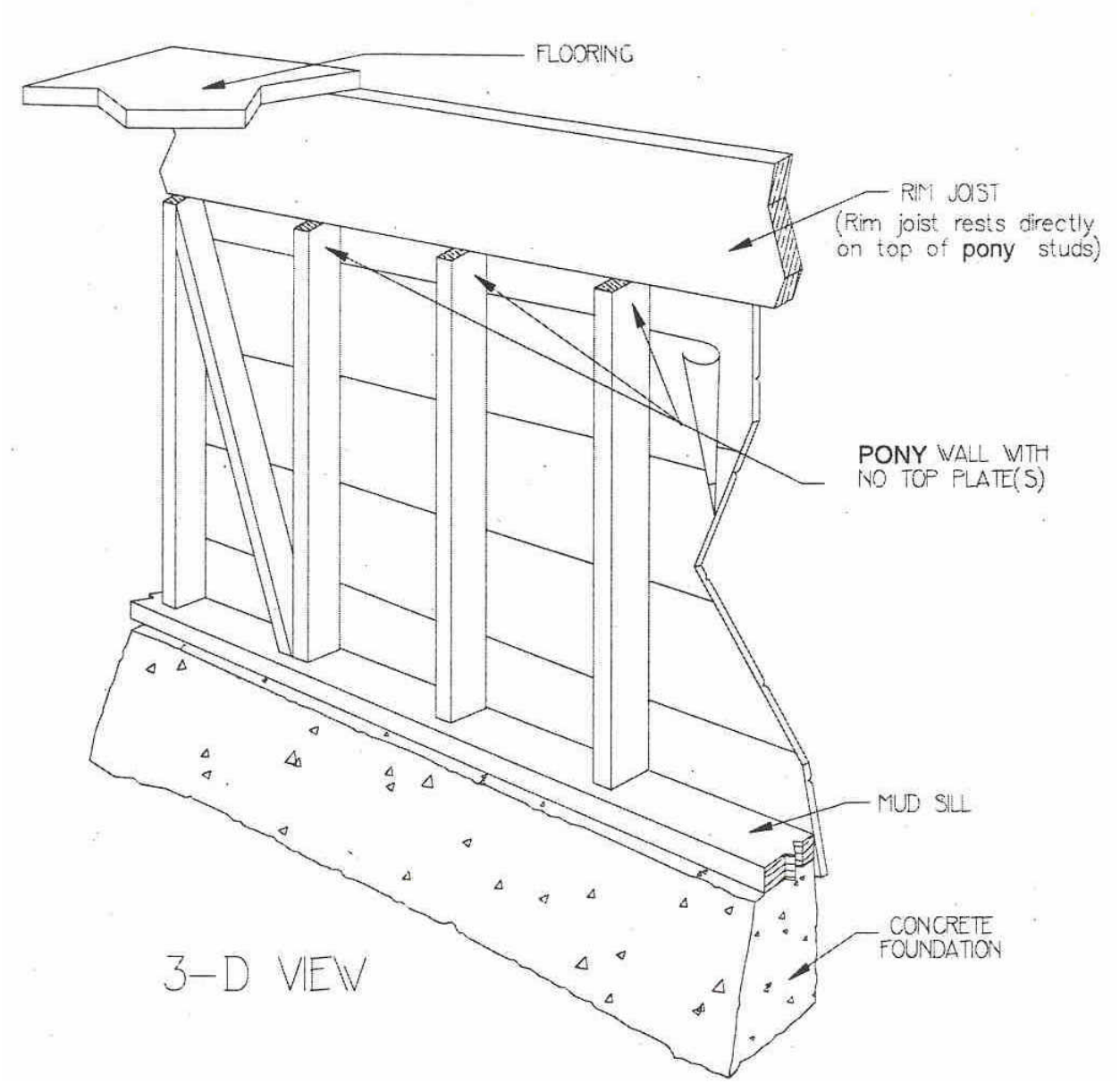

REPAIR CONDITION 3b-1

NO PONY WALL TOP PLATE(S)

RIM JOIST RESTS ON TOP OF PONY WALL STUDS

Framing modifications are necessary to provide the required nailing surfaces for the plywood shear panels and to ensure connections which complete the load path between the pony wall and the floor system.

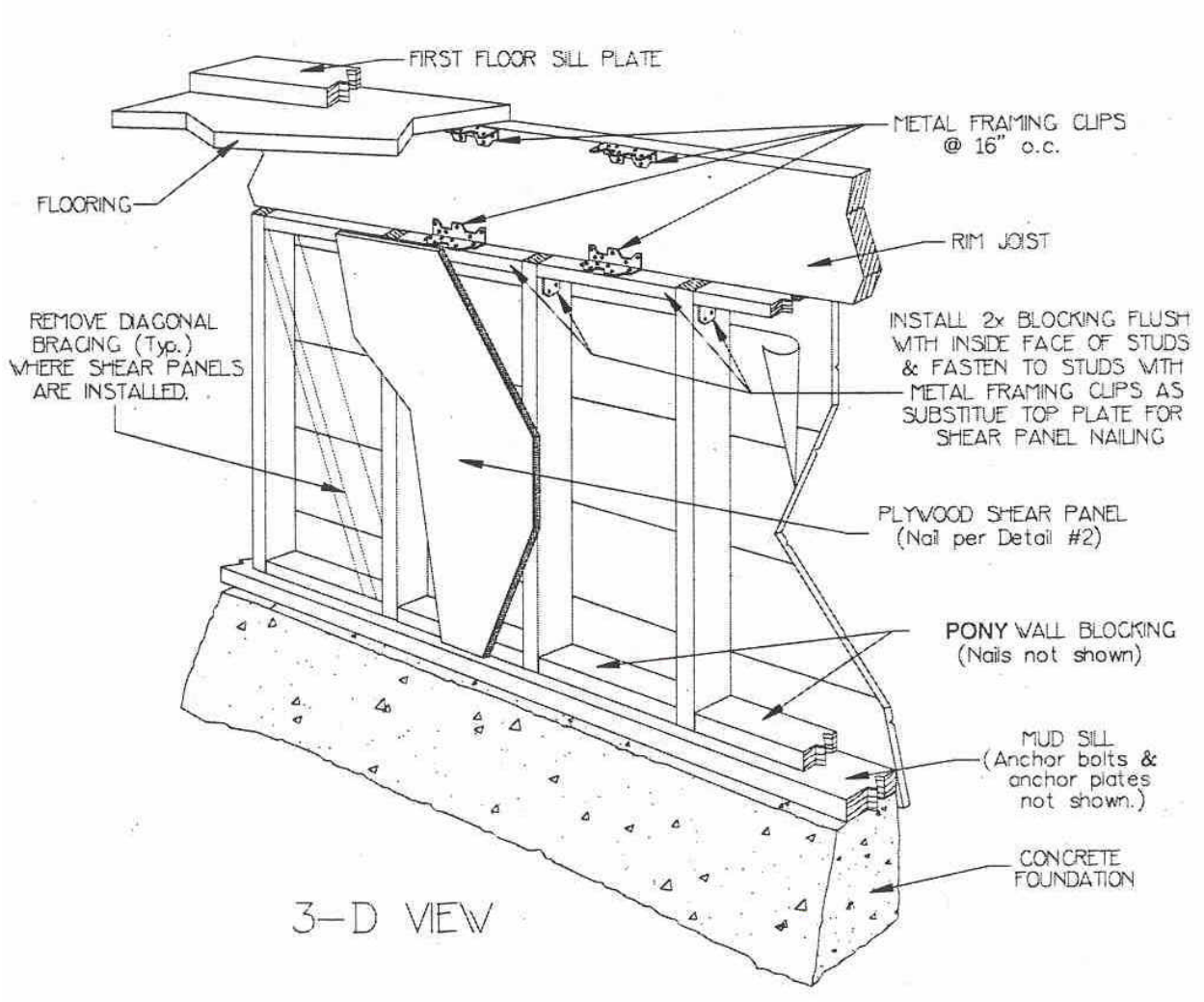

Plan Detail 3b-1.1a
[For use with the Project Impact
SHER Planset]

REPAIR DETAIL FOR PONY WALLS WITH NO TOP PLATE(S) WHERE THE RIM JOIST RESTS DIRECTLY ON THE PONY WALL STUDS (FRAMING CLIPS SHOWN BETWEEN FLOOR FRAMING SYSTEM AND CONTINUOUS RIM JOIST NOT REQUIRED; FRAMING CLIPS BETWEEN CONTINUOUS RIM JOIST AND NEWLY INSTALLED 2X BLOCKING ARE REQUIRED)

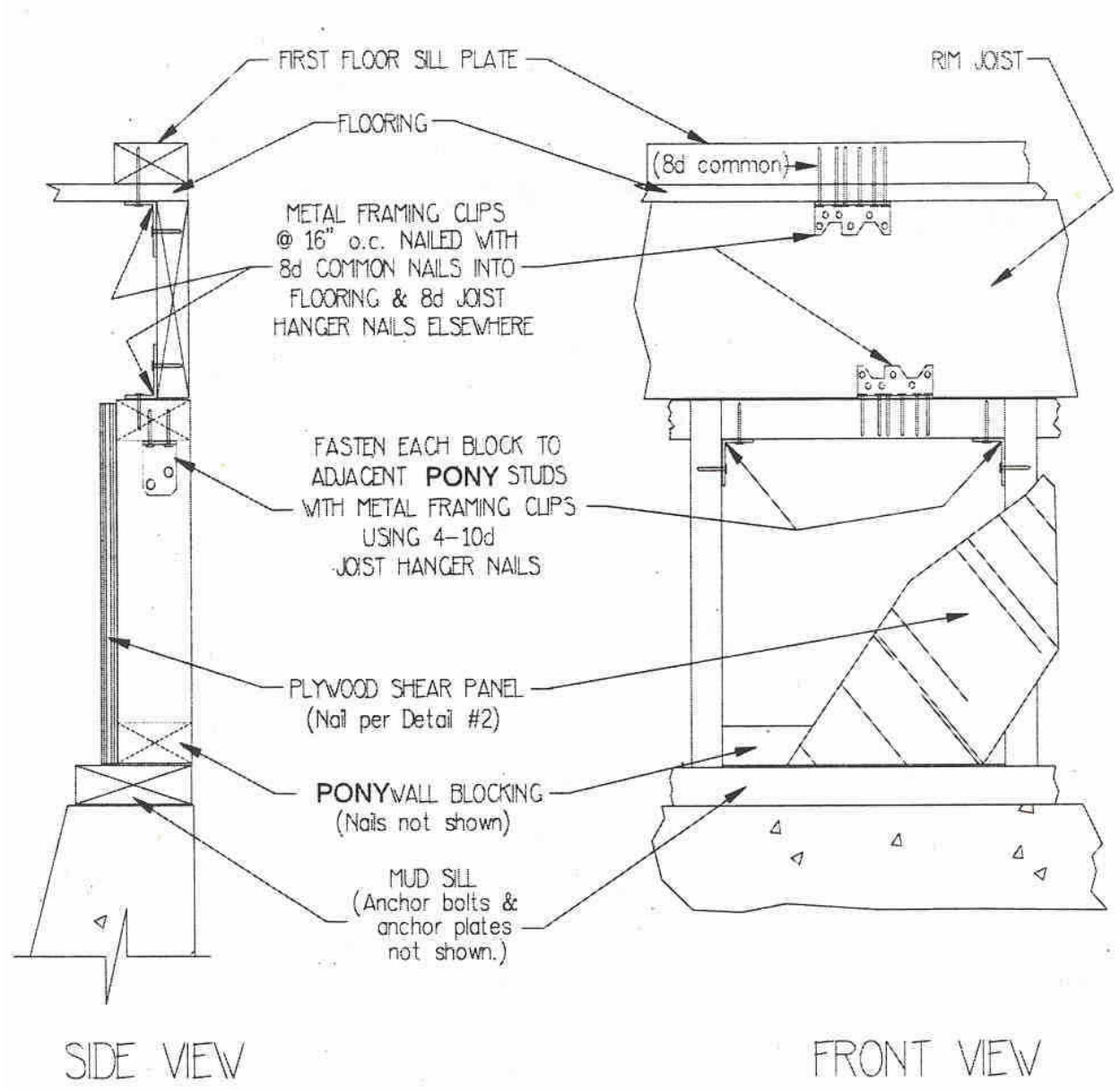

PLAN DETAIL 3b-1.1b

[For use with the Project Impact SHER Planset]

REPAIR DETAIL FOR PONY WALLS WITH NO TOP PLATE(S) WHERE THE RIM JOIST RESTS DIRECTLY ON THE PONY WALL STUDS (UPPER FRAMING CLIPS BETWEEN FLOOR FRAMING SYSTEM AND CONTINUOUS RIM JOIST NOT REQUIRED; FRAMING CLIPS BETWEEN CONTINOUS RIM JOIST AND NEWLY ADDED JOIST BLOCKING ARE REQUIRED)

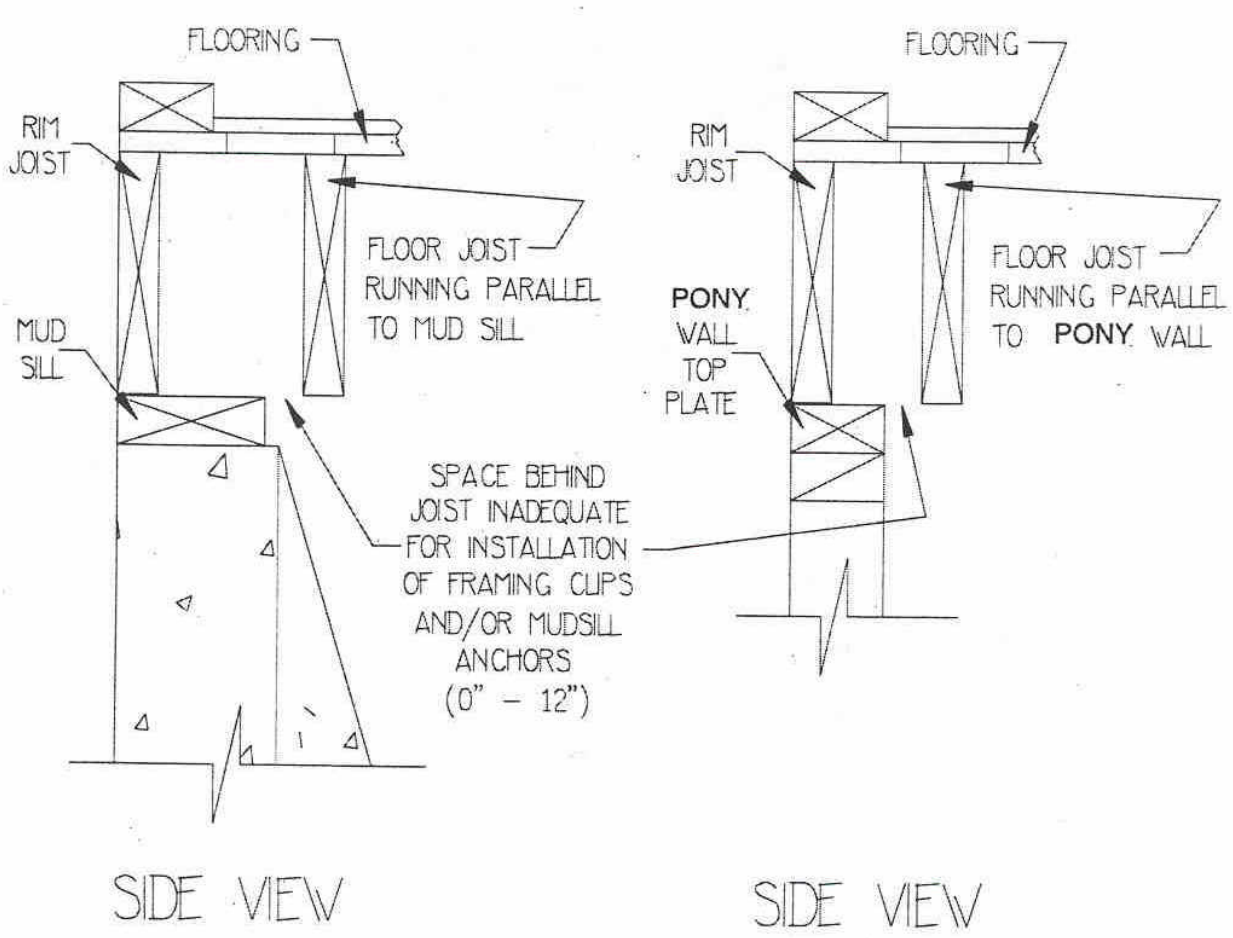

REPAIR CONDITION 3b-2

INADEQUATE SPACE BETWEEN RIM JOIST & FLOOR JOIST

NO ROOM TO INSTALL FRAMING CLIPS AND/OR ANCHORS

Framing modifications are necessary to allow access to the rim joist and the mud sill (or the top of the pony wall) to permit the installation of the required framing clips and/or mud sill anchors.

APPENDIX E

NAIL AND LAG SCREW SIZES FROM SAN LEANDRO BOOKLET

FULL SCALE NAIL CHART

COMMON	Wire Diam.	Wire Gage	LENGTH	
20d	.192	6	4"	
16d	.162	8	3 1/2"	
12d	.148	9	3 1/4"	
10d	.148	9	3"	
8d	.131	10.25	2 1/2"	
6d	.113	11.5	2"	