NOTE:
Detail F only applies to the replacement of a SECTION of foundation wall. Partial perimeter foundations or unreinforced masonry foundations shall be evaluated by an engineer or architect.

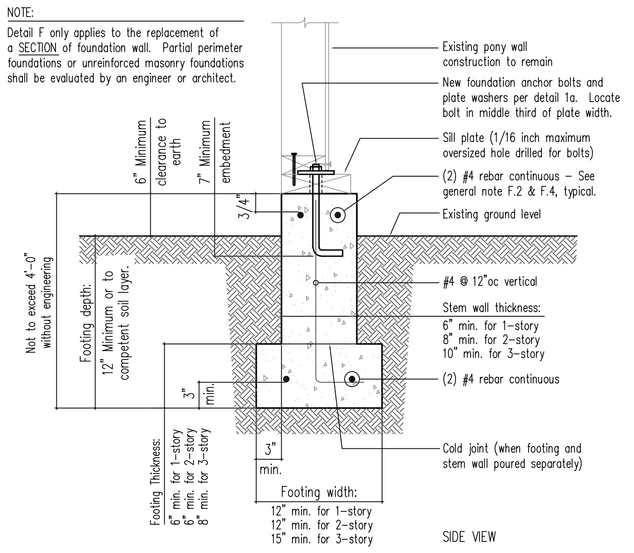

REFERENCE: SBC Table 18–1–C

F CONCRETE FOUNDATION – SECTION REPLACEMENT

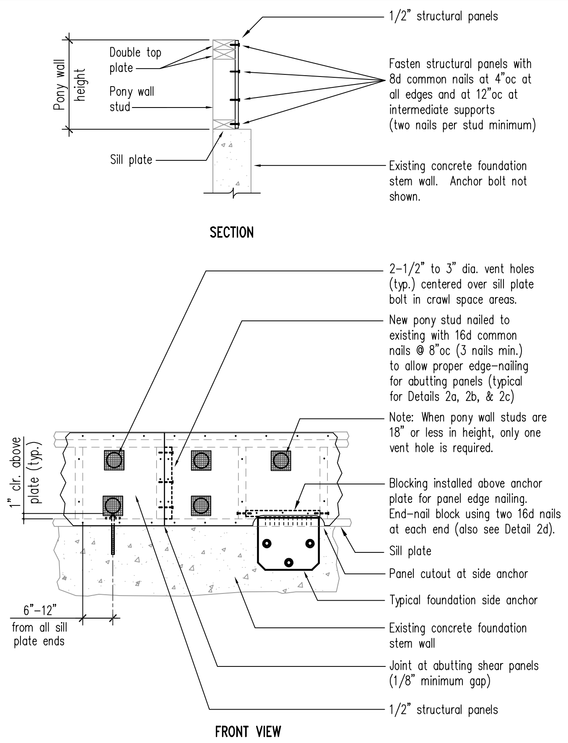

2a SILL PLATE SAME WIDTH AS PONY WALL

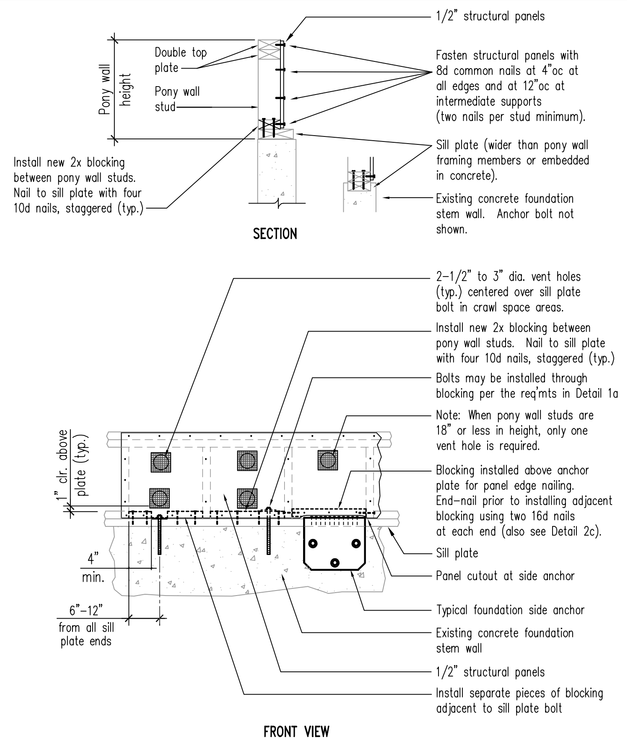

2b SILL PLATE WIDER THAN PONY WALL

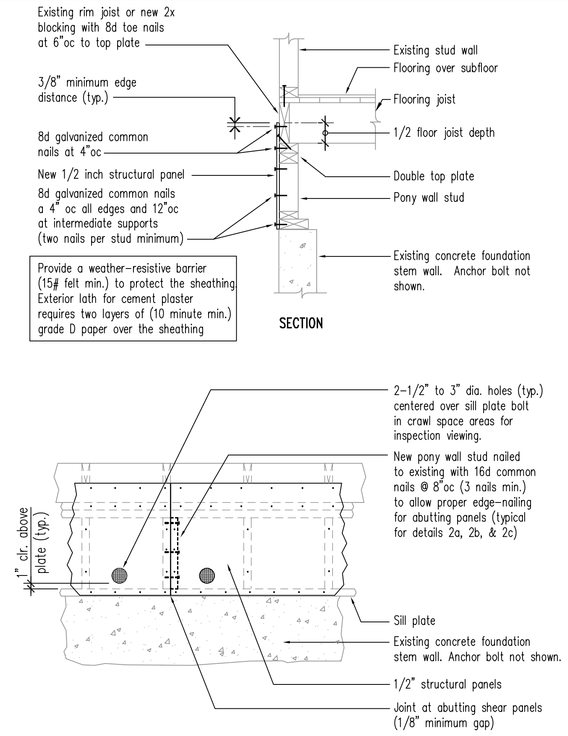

2c STRUCTURAL PANEL INSTALLED ON EXTERIOR FACE OF PONY STUDS

TYPICAL PONY WALL BRACING NOTES:

1. Structural panels shall be 15/32" or 1/2" CDX, Oriented Strand Board (OSB), or Structural II and shall be installed in accordance with the size, spacing, and hardware specifications in Details 2a through 2e and General Notes (Section III, Sheet S1).
2. Nails: All 8d nails shall be "common" nails with 8d shank diameter equal to .131 inches.
3. Leave screens for ventilation holes at anchors unfastened until the anchors are inspected. No vent holes are required in heated areas, such as finished basements, or exterior panel installations.

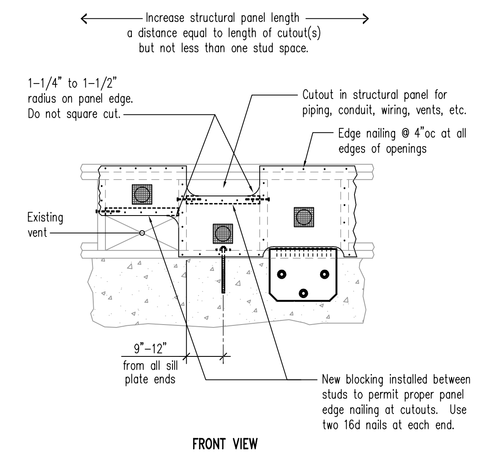

2d PANEL CUTOUTS AND NOTCHING

2 PONY WALL BRACING DETAILS

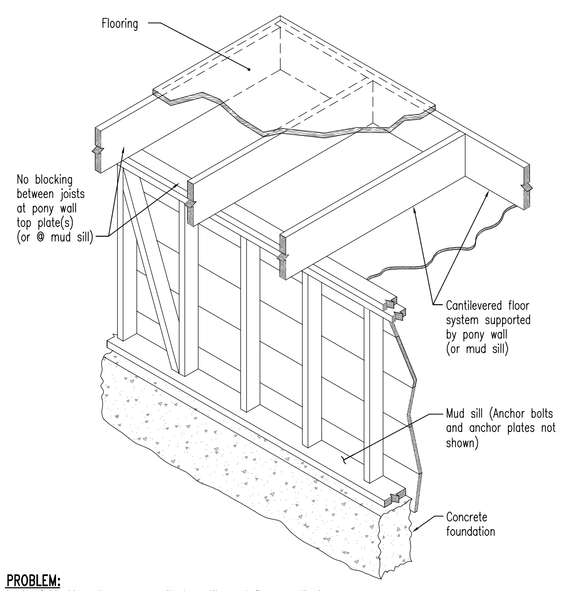

PROBLEM:
Lack of blocking above pony wall at cantilevered floor results in no framing elements on which to install framing clips.

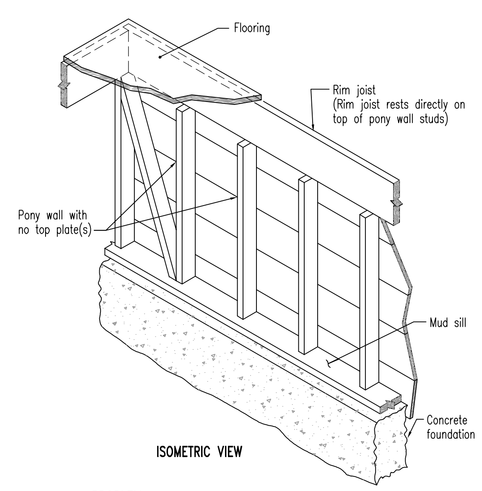

PROBLEM:
No pony wall top plate(s)

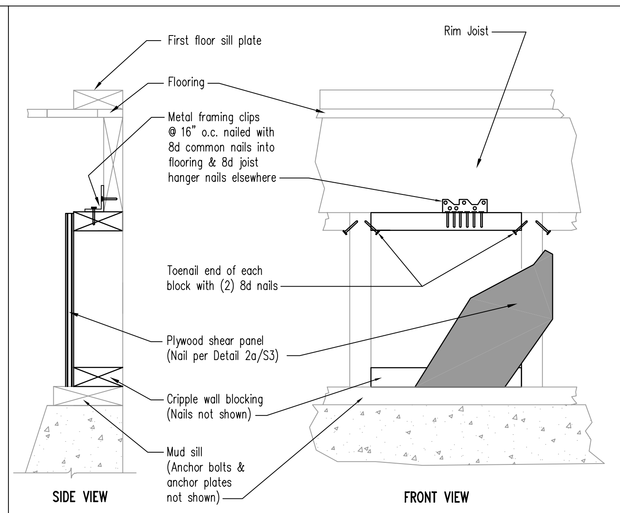

SOLUTION:
Framing modifications are necessary to provide the required nailing surfaces for the plywood shear panels and to ensure connections which complete the load path between the pony wall and the floor system.

2e PONY WALL BRACING FOR PONY WALLS WITHOUT TOP PLATES

2 PONY WALL BRACING DETAILS FOR PONY WALLS WITHOUT TOP PLATES

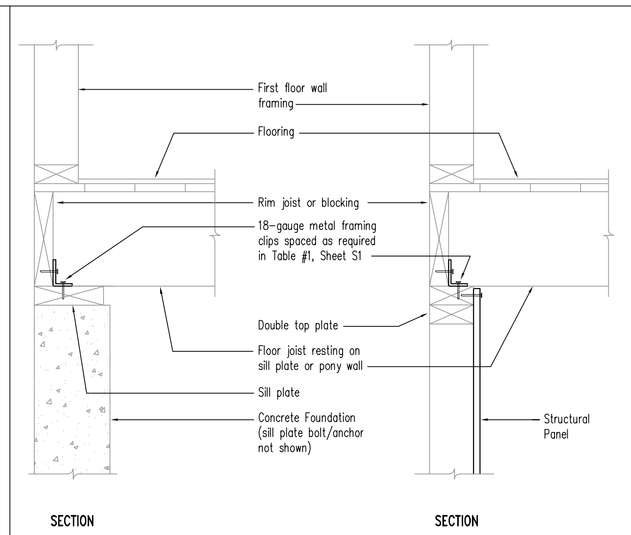

3a FLOOR JOIST PERPENDICULAR TO SILL PLATE OR PONY WALL

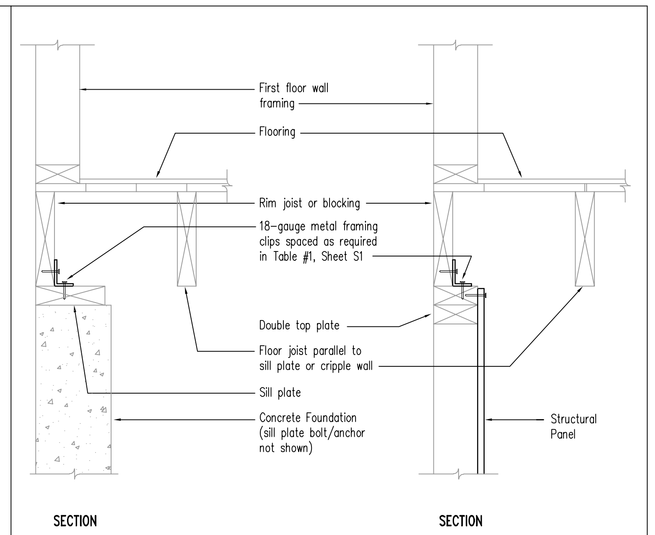

3b FLOOR JOIST PARALLEL TO SILL PLATE OR PONY WALL

3 FLOOR FRAMING CONNECTION DETAILS

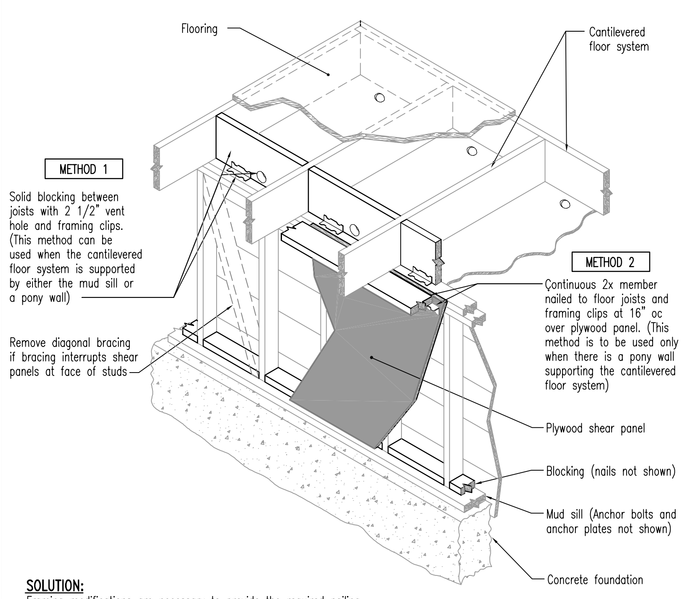

SOLUTION:
Framing modifications are necessary to provide the required nailing surfaces for the framing clips and to ensure connections that complete the load path between the pony wall and the floor system (See details on sheet S–3)

3 FLOOR FRAMING AT CANTILEVERED FLOORS CONNECTION DETAILS

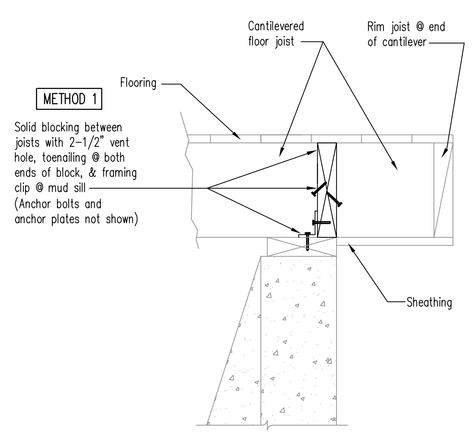

3c CANTILEVER ABOVE SILL PLATE

REPAIR DETAIL FOR CANTILEVERED FLOOR WITH NO BLOCKING ABOVE SILL PLATE
(Install solid blocking between joists – "METHOD 1")

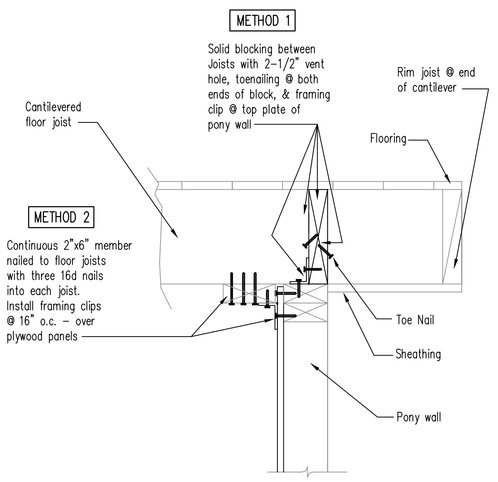

3d CANTILEVER ABOVE PONY WALL

REPAIR DETAIL FOR CANTILEVERED FLOOR WITH NO BLOCKING ABOVE PONY WALL
(Install solid blocking between joists – "METHOD 1"
OR install continuous 2x member – "METHOD 2")

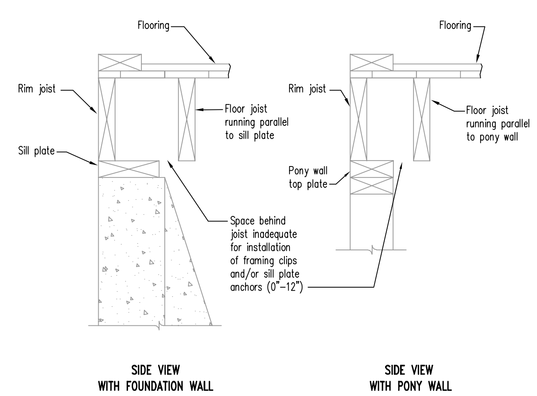

Problem:
Inadequate space between rim joist & floor joist results in no room to install framing clips and/or anchors

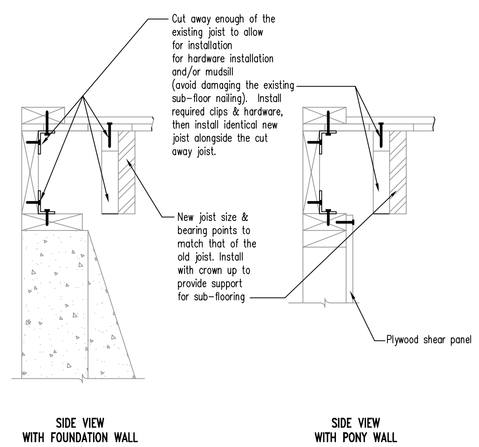

3e INADEQUATE CLEARANCE

Solution:
Framing modifications are necessary to allow access to the rim joist and the mud sill (or the top of the pony wall) to permit the installation of the required framing clips and/or mud sill anchors. **Alternate solutions may be approved on a case by case basis.**

3 FLOOR FRAMING CONNECTION DETAILS

REVISED
MAY 2002

Standard Earthquake Home Retrofit Plan Set

EARTHQUAKE DAMAGE REDUCTION IN EXISTING WOOD FRAME RESIDENTIAL BUILDINGS WITH WEAK PONY WALLS AND UNBOLTED SILL PLATES

Applicant Plan Sheet

BUILDING A DISASTER RESISTANT COMMUNITY
PROJECT IMPACT SEATTLE

Sheet
S3
3 of 3