DCLU

Director's Rule 38-82

Applicant	Page of	Supersedes
CITY OF SEATTLE DEPARTMENT OF CONSTRUCTION AND LAND USE	1 2	10-79
	Publication 10-25-82	**Effective** 11/22/82
	Code and Section Reference 23.84.02 SMC Zoning	
Subject Pedestrian Access Bridges	**Type of Ruling** Code Interpretation	
	Ordinance Authority 3.02.020 SMC	
Index Zoning - Technical Requirements	**Approved** William Justen	**Date** 11-16-82

Chapter 23.84.02 SMC defines "access bridge" as

"A structure which is designed and necessary for pedestrian access from an alley, street or easement to a principal or accessory structure."

Under SMC Title 24, pedestrian access bridges are not defined but have been permitted by Rule (10-79) without variance if they met certain criteria.

Effective immediately, a pedestrian access bridge shall be permitted without variance under both Title 23 and 24 if it is necessary to provide direct access to a street, alley or easement even if other less direct physical pedestrian connection is also provided if the following criteria are met:

1. The guardrails are no higher than 42 inches above the walkway.

2. The walkway is no more than 12 inches above existing grade at the street end.

3. The walkway is no wider than 5 feet.

Reason

A pedestrian bridge or stairway designed to provide access from a dwelling unit to the street on lots where steep slopes severely limit pedestrian access serves the same purpose as a paved walkway from a sidewalk or street. Such walkways are not governed by Zoning or Land Use Code restrictions concerning lot coverage and setback, and pedestrian bridges and stairways should be treated in the same manner. The provisions of the Land Use Code which exempt barrier-free access from certain restrictions clearly indicate an intent to favor easy access whenever possible. Allowing pedestrian access bridges, even when an alternate but less direct method of access is possible, complies with this intent.

JT:js
DR3/PB

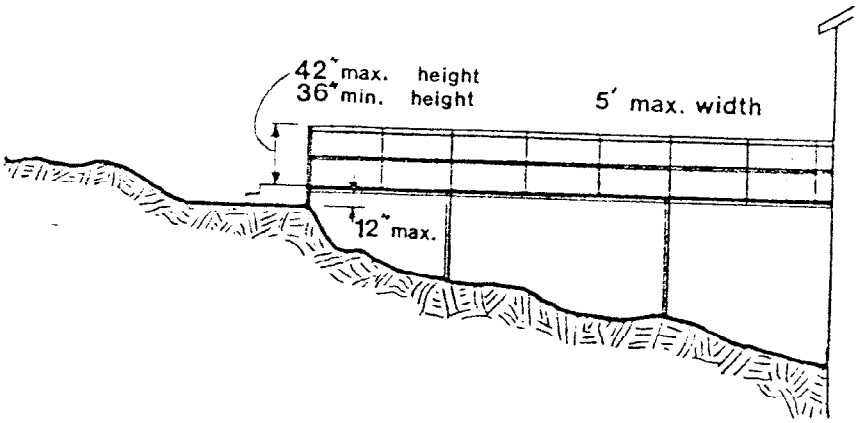
42" max. height
36" min. height
5' max. width
12" max.

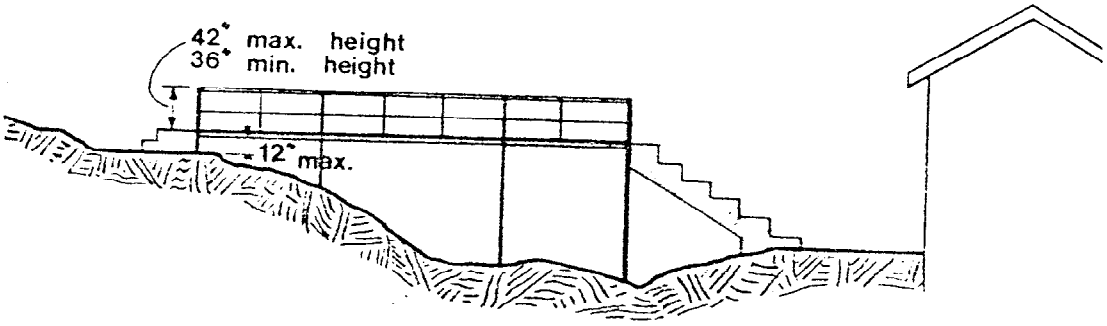
42" max. height
36" min. height
12" max.