Evaluation of the 1998-2001 Demonstration Program for Innovative Housing Design

City of Seattle
Department of Design, Construction, and Land Use

Detached ADUs and Cottages

June 20, 2003

Table of Contents

Executive Summary 5
Detached ADU Findings 5
Cottage Findings 8
Process Findings 9
Neighborhood Sentiment 9

Introduction 11
The Demonstration Program for Innovative Housing 12
Evaluating Constructed Demonstration Projects: Methodology 14
Gauging Neighborhood Opinion 14

Detached ADU Evaluations 17
Selected Detached ADU Projects 17
Detached ADU Project Questions 17

Magnolia Detached ADU 19
Project Overview 19
Process Evaluation 20
Neighborhood Sentiment 24
Conclusions 24

North Capitol Hill Detached ADU 27
Project Overview 27
Process Evaluation 27
Neighborhood Sentiment 32
Conclusions 33

Green Lake Detached ADU 35
Project Overview 35
Process Evaluation 36
Neighborhood Sentiment 40
Conclusions 41

Licton Springs Detached ADU 43
Project Overview 43
Process Evaluation 44
Neighborhood Sentiment 48
Conclusions 50

Detached ADU Project Conclusions 52

Cottage Project Evaluation 57
Cottage Project Questions 57

Ravenna Cottages 59
Project Overview 59
Process Evaluation 59
Neighborhood Sentiment 63
Conclusions 64

Cottage Housing Conclusions 67

Process Conclusions 69
Selection Process Analysis 69
Design Review Process Analysis 69
What do the Neighbors Think of Demonstration Projects? 70

Appendices
Sample Survey Questionnaire
Survey Results
Ordinance # 119241
Ordinance # 119368
Ordinance # 119784
Ordinance # 120318

Executive Summary

The Demonstration Program for Innovative Housing Design was established in 1998 to test housing concepts that could diversify Seattle's housing and provide alternatives to living in a conventional house, condominium, or apartment. It allowed flexibility for development not currently allowed under existing regulations, including cottages and detached accessory dwelling units, while remaining consistent with the City's land use, housing, and neighborhood goals.

The primary purpose of this evaluation is to determine whether these housing types are appropriate to allow outright, and if so, what development standards are appropriate to regulate them.

A combination of neighbor surveys and comments, owner/applicant interviews, urban design analysis, staff interviews, and review of permit files have provided invaluable information and lessons learned about each project.

This evaluation covers four detached ADUs and one cottage housing project constructed through the Demonstration Program as of April, 2003. Evaluation of two constructed height departure and small lot residential projects, as well as other projects still under construction, will take place at the end of 2003.

Detached ADU Findings

The Demonstration Program allowed detached ADUs across a variety of neighborhood types. All were found to be successful, based on a permit process and urban design analysis, neighborhood survey results, and evaluation criteria set forth in the original Demonstration Program ordinance.

The findings of the Department of Design, Construction, and Land Use(DCLU) are that detached ADUs can work in different types of neighborhoods, and that there are certain types of lots that are more appropriate than others for detached ADUs. Larger lots, corner lots, and lots on alleys put more physical space between detached ADUs and neighboring residences, and are places where new dwellings should be encouraged. Other, smaller lots have also been shown to work, as long as the size of the detached ADU is appropriate and it is designed well.

The Demonstration Program detached ADUs bring several issues and successes to light in considering new development standards, design guidelines, and processes. DCLU will consider:

- ensuring a proper maximum allowed height of detached ADUs to limit perceived bulk and scale, privacy, and shadow impacts;
- limiting the total allowed floor area and footprint of detached ADUs to further ensure scale compatibility, neighborhood fit, and to maintain open space:
    - using floor area ratios to regulate the size of detached ADUs to ensure a proper fit;
    - maintaining a maximum amount of lot coverage when adding a detached ADU;
- requiring a minimum lot size for new detached ADUs to limit crowding;
- requiring appropriate setbacks for detached ADUs built on parcels without alleys to limit open space and privacy impacts.
- using development standards that favor alley locations when allowing detached ADUs;
- balancing neighborhood architectural compatibility versus primary structure compatibility in the Design Review process used to allow detached ADUs;

- using a discretionary review process such as administrative Design Review to shape detached ADUs, potentially including:
  - detached ADU scale, color, and materials that match or are complementary to the existing home;
  - the treatment of blank walls;
  - the location of windows to minimize privacy issues;
  - landscape requirements to limit privacy impacts; and
  - flexibility to achieve a more innovative or modern design.

Cottage Findings

The Seattle Land Use Code includes requirements for Residential Small Lot and Cottage Housing Developments (SMC 23.43.012). Cottages are currently allowed only in multifamily zones or in the Residential Small Lot (RSL) zone, which is not widely mapped. Through the Demonstration Program, DCLU has found that for the most part, these standards successfully provide the basic development standards for this housing type, with only minor changes necessary.

Successes and issues related to cottage development were raised by the Demonstration Program. DCLU will consider:

- requirements or guidelines for scale and materials of cottages to complement the adjacent homes;
- limits on the floor area, height, and scale of cottages;
- landscape requirements for cottages; and
- whether carriage units should be allowed in addition to cottages.

Design review for cottage housing is recommended to help address basic design principles to improve future cottage developments. Additional design guidelines that address open space would be helpful.

Process Findings

These conclusions highlight strengths and weaknesses of the Demonstration Program for Innovative Housing Design to be considered if there are future programs:

- On the whole, the Design Review process was very successful in the review and shaping of selected Demonstration Projects.
- With the right development standards, staff training, and design guidelines, detached ADUs can be effectively administered without Design Review.
- Due to their more comprehensive change to a site, the Design Review process should be used to better help cottages fit into their surroundings.

Neighborhood Sentiment

At the project level, the results found in the neighborhood surveys were quite positive. The findings listed below are brief summaries of overall ratings.

- The impacts of all projects were rated neutral or positive much more than negative.
- Respondents generally expressed support for the idea of smaller infill housing.
- Many have concerns about traffic and parking.
- People who opposed more housing almost always cited traffic and parking impacts as their primary concern.

Project Summaries

Ravenna Cottages

The Ravenna Cottages project in the Green Lake neighborhood demonstrates the Demonstration Program's Cottage "Type B" category—cottages with carriage units. Carriage units are essentially small cottages above garages, and in the case of Ravenna Cottages, the carriages share common walls.

Six cottages line two sides of a courtyard that is fenced and gated from the street. At the back of the courtyard sit three carriage units located above nine garages lining the alley.

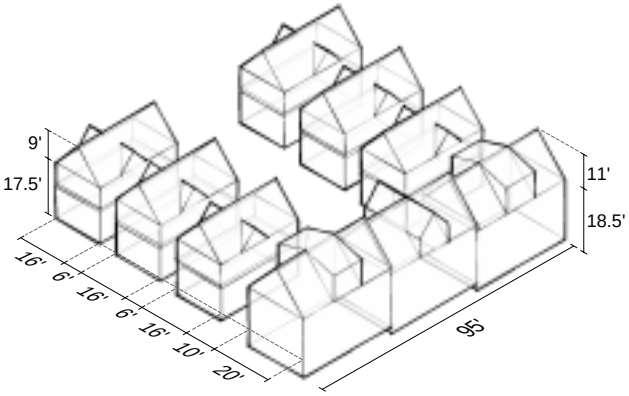

This drawing illustrates the dimensions of Ravenna Cottages.

Neighborhood Impact Survey Results

28%	*27%*	*45%*
Bad	*Neutral*	*Good*

Ravenna Cottages uses a subtle variety of complementary colors to help minimize its visual impact.

Magnolia Detached ADU

This detached ADU in Magnolia sits at the rear of a large corner lot next to an alley amidst a single family residential area.

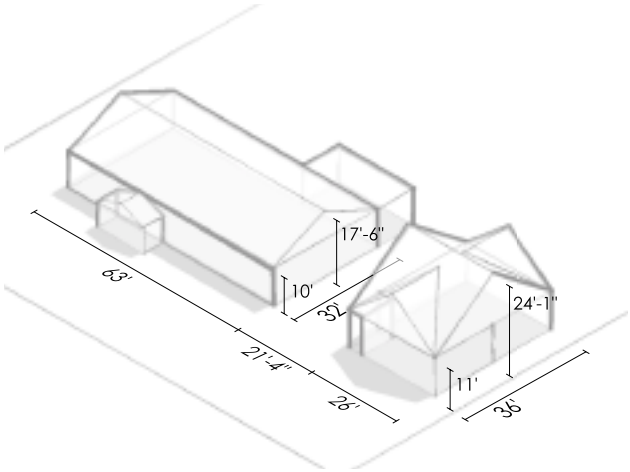

Neighborhood Impact Survey Results

16%	19%	65%
Bad	Neutral	Good

A view of the primary structure (left) next to the detached ADU (right).

North Capitol Hill Detached ADU

The detached ADU structure, tucked behind the main home and barely noticeable from the street, replaced an existing detached garage.

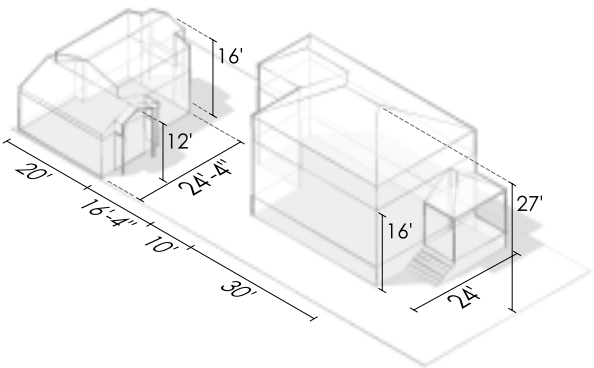

Neighborhood Impact Survey Results

14%	30%	56%
Bad	Neutral	Good

The detached ADU matches the main home.

Green Lake Detached ADU

This detached ADU sits above a redeveloped detached garage on an alley.

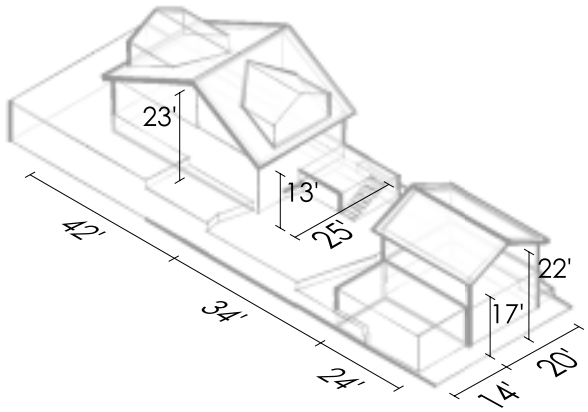

Neighborhood Impact Survey Results

19%	22%	59%
Bad	Neutral	Good

The detached ADU sits on an alley above a two-car garage, next to a one-car garage with patio above.

Licton Springs Detached ADU

This detached ADU project in the Licton Springs neighborhood near Green Lake replaced an existing detached accessory unit with a larger dwelling. A parking space was added to provide one space for the main home and one for the detached ADU.

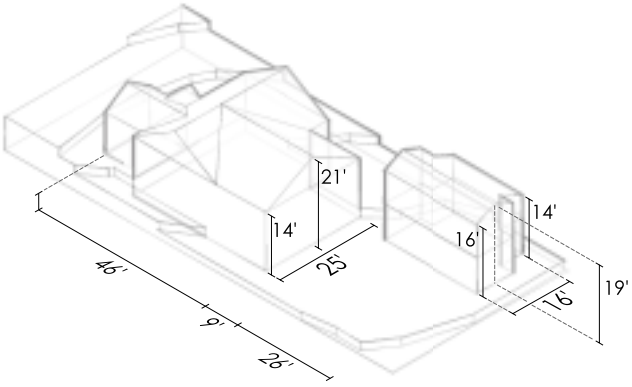

Neighborhood Impact Survey Results

47%	21%	33%
Bad	Neutral	Good

Vegetation helps screen the detached ADU (center) from the street. The main home is to the right.

Introduction

The following is an evaluation of the Demonstration Program for Innovative Housing Design, established in 1998 to test housing concepts that could diversify Seattle's housing and provide alternatives to living in a conventional house, condominium, or apartment. The Demonstration Program allowed flexibility for development not currently allowed under existing regulations, while remaining consistent with the City's land use, housing, and neighborhood goals. The Program primarily demonstrated traditional types of smaller-scale housing that historically are present in many Seattle neighborhoods - cottage housing, detached accessory dwelling units (ADUs), or smaller single-family houses on small lots, that are not permitted under current zoning. The program used a competitive selection process, and required all selected projects to go through Design Review.

The primary purpose of this evaluation is to determine whether these housing types are appropriate to allow in single family zones throughout Seattle, and what development standards are appropriate to allow them. The evaluation will also help to determine what the best review process may be for allowing these housing types. This post-program evaluation is an essential element of the original 1998 Demonstration Program for Innovative Housing Design ordinance (#119241). The ordinance posed a number of questions to be answered by DCLU at the Program's completion. A combination of neighbor surveys and comments, owner/applicant interviews, urban design analysis, staff interviews, and review of permit files have provided invaluable information and lessons learned about each project.

Note: this evaluation covers detached ADUs and cottages constructed through the Demonstration Program as of April, 2003. Evaluation of constructed height departure and small lot residential projects will take place at the end of 2003.

What were the goals of the Demonstration Program for Innovative Housing?

The goals of the Demonstration Program are to test new or more flexible regulations and processes in an effort:

- To encourage housing production, particularly types of housing that are not readily available in Seattle, or are not currently being produced.
- To stimulate innovative housing design that is consistent with the housing goals of a neighborhood, and that fits in with or improves the character of the neighborhood.
- To encourage the development of housing that will serve as a catalyst to stimulate housing production, particularly in neighborhoods where new or rehabilitated residential development has been limited.
- To serve as a model for other neighborhoods, demonstrating housing solutions that could have broader application in other neighborhoods.
- To increase the diversity of housing types and levels of affordability to meet the varied needs and goals of a neighborhood.

Source: Ordinance #119241

The Demonstration Program for Innovative Housing

What the Program Allowed

The Demonstration Program allowed applications for five types of projects: detached ADUs, cottages, cottages with carriage units, small lot single family homes, and departures for height through the Design Review program.

While allowed as part of the Demonstration Program, no applications were received for development standard departures for modifications to existing buildings.

The Program authorized a fixed number of each type of project, and under each round of selection, a limited number could be chosen to proceed through the permit process. The chart below shows the type, location, and status of projects selected under the Demonstration Program.

Status of Applications Selected for the Demonstration Program for Innovative Housing Design (as of April, 2003)

	Submittal Period	Housing Type	Address	Status
1	Jan 1999	detached ADU	3255 28th Ave W	constructed
2	Jan 1999	detached ADU	2211 Federal Ave E	constructed
3	Jan 1999	2 houses/RSL	809 23rd Ave	constructed
4	Jan 1999	height departure	1413 15th Ave	constructed
5	Jan 1999	height departure	1804 28th Ave S	constructed
6	Jan 1999	13-unit RSL	4001, 4009, 4021 31st Ave S	under construction
7	March 1999	cottage Type B	6318 5th Ave NE	constructed
8	July 1999	detached ADU	933 21st Ave E	cancelled application
9	July 1999	detached ADU	5922 42nd Ave SW	withdrawn
10	July 1999	detached ADU	8540 Interlake Ave N	constructed
11	July 1999	detached ADU	5420 Kirkwood Place N	constructed
12	June 2000	detached ADU	3410 36th Ave W	in MUP process
13	June 2000	detached ADU	4214 S Hudson	yet to apply
14	June 2000	detached ADU	8836 38th Ave SW	withdrawn
15	June 2000	cottage type B	4858 Beach Drive SW	withdrawn & reapplied
16	June 2000	cottage type A	2400 SW Roxbury	under construction
17	May 2001	detached ADU	102 NW 45th St	yet to apply
18	May 2001	detached ADU	2216 S Hinds St	under construction
19	May 2001	cottage type A	1521-1523 E Jefferson St	in MUP process
20	May 2001	cottage type A	10035 55th Ave S	yet to apply
21	May 2001	cottage type B	4858 Beach Drive SW	in MUP process

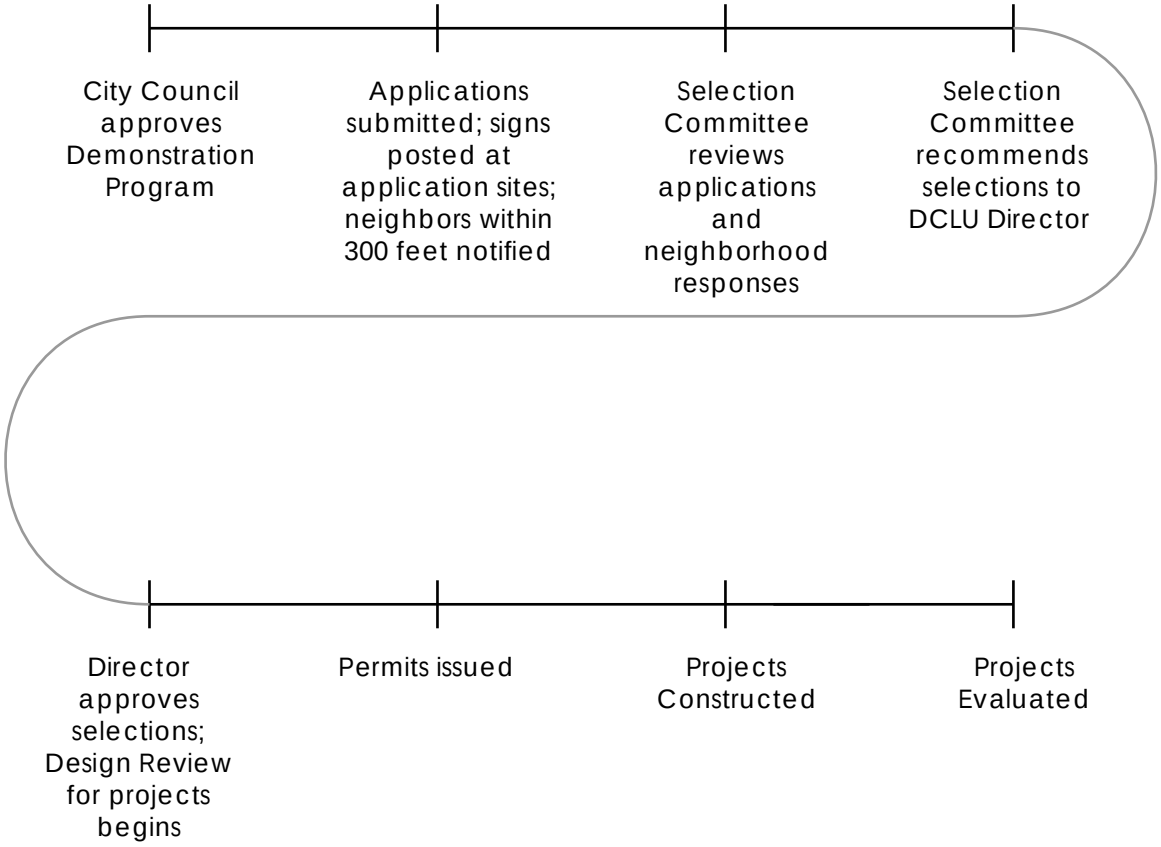

The Demonstration Program for Innovative Housing Design Process

How Projects Were Selected

The Demonstration Program ordinance allowed a total of ten detached accessory dwelling unit projects to be selected; each round allowed up to five selections, but typically only two to three were selected. The detached ADU category was by far the most popular application type received during the course of the Demonstration Program, and only the applications received in each round that best met the selection criteria became constructed projects.

Each submittal period required City Council authorization. After publishing notification of Council's approval, the Department of Design, Construction, and Land Use (DCLU) received several applications for each project type. DCLU compiled a list of interested parties (neighbors of projects and potential applicants) for each housing type in advance of each round, and notification was sent to this list as well as being published in DCLU's monthly newsletter *dcluINFO*.

Notification of the applications were mailed to neighbors within 300 feet of a proposed site, and a sign was placed on the site itself. This initiated a two-week period, during which neighbors were allowed to comment on the proposal via telephone, email, or postal mail. In application materials, DCLU encouraged applicants to discuss their proposals with as many neighbors as possible prior to applying for the program.

During the comment period, applications were reviewed by a selection committee, which included two members of the Seattle Plan-

ning Commission, other non-City design and planning professionals, and DCLU's Senior Urban Designer, who would later help provide guidance to projects in the Design Review process. The selection committee reviewed each application for how well it met the selection criteria outlined in the Demonstration Program ordinance, and then made a recommendation to the DCLU Director.

Selection criteria included:

- Goals - fulfills purpose and goals of Demonstration Program.
- City Policies - furthers goals of Comprehensive Plan and Housing Action Agenda.
- Neighborhood Goals - supports goals of neighborhood, and neighborhood plan goals when applicable.
- Neighborhood Support - receives support from neighborhood organizations and surrounding neighbors.
- Affordability - reduces unit cost, increases affordability of units, or adds to diversity of neighborhood affordability.
- Competition - rating in AIA or other competition, if applicable.
- Test Ideas - Represents a case for Future Code Amendments.

Project Review and Permitting

Once selected, each project would begin the Early Design Guidance phase of Design Review. Because of their small size, detached ADUs underwent an Administrative Design Review process, as opposed to going before the full Design Review Board like other projects.

If above the SEPA threshold, the project would also be subject to environmental review, prior to a Master Use Permit decision. Each project would then obtain a building permit before construction could begin.

Evaluating Constructed Demonstration Projects: Methodology

This evaluation will be used to inform future recommendations to amend City zoning regulations to allow alternatives to standard single family homes, townhouses, apartments, and condominiums. DCLU's evaluation reviewed the positive and negative results of the constructed projects from an urban design perspective, examining both the physical and aesthetic aspects of completed projects and the process that allowed them. The perceptions and comments from the people who live in and near them also influenced the evaluation of the Demonstration Program projects.

DCLU's evaluation included:

- An analysis of the physical form of the project relative to its surroundings;
- An analysis of the review processes and how they affected the final outcome of the projects; and
- Results of surveys mailed to neighbors of constructed projects.

Gauging Neighborhood Opinion

Currently there are eight constructed demonstration projects (nine projects remain in the permitting process or have yet to apply for a permit). In mid-August 2002, DCLU sent out several hundred questionnaires to addresses within 300 feet of a built demonstration project. A sample questionnaire can be found in the Appendix. The questionnaires helped to answer questions posed by the original Demonstration Program Ordinance.

20-30 replies were received for most projects. Two had approximately ten responses, and Ravenna Cottages generated 42 responses. The surveys asked project neighbors to rate from 1-5 (1=bad, 5=good) a project's impacts including parking, traffic, population, neighbors; and the quality of design & construction, and how well it fits into the neighborhood.

The Demonstration Program Ordinance asked "*Were there any unintended consequences that need to be resolved?" and "What do the neighbors think of this type of housing?"* The survey also asked recipients to comment on parking, traffic, population, and overall impact of the housing type in general. Generally the objective was to determine what those familiar with the demonstration projects thought of allowing the housing type in single family zones throughout the city, based on what they knew about the project in their neighborhood.

Survey results are presented for each project in two ways: first, the percentage of responses on impacts that are bad (1's and 2's), neutral (3's), and good (4's and 5's). The scores and method by which these percentages were derived are found in the appendix.

Second, a chart showing the average response for each question is shown for each project. It is important to note that because the chart averages the scores, it tends to not be as good of an indicator of the range of answers of what people thought the impacts were. Higher averages do indicate a better perception of impacts, however.

Overall survey results are also discussed in the conclusion of the document.

Detached ADU Evaluations

Detached ADUs Selections

The detached ADU category was by far the most popular application type received during the course of the Demonstration Program.

As of April, 2003, there are four constructed detached ADUs to evaluate:

- 3255 28th Avenue W
- 2211 Federal Avenue E
- 8540 Interlake Avenue N
- 5420 Kirkwood Place N

One has had its permit issued and is nearing the completion of construction:

- 2216 S Hinds Street

One is in the permitting process:

- 3410 36th Avenue W

Finally, several have yet to apply or have abandoned their projects:

- 102 NW 45th Street
- 4214 S Hudson
- 8836 38th Ave SW
- 933 21st Avenue E

Detached ADU Questions

The original Demonstration Program Ordinance posed a number of questions to be answered by DCLU at the Program's completion. The following questions are specific to the individual Detached ADU projects that were selected. The questions were addressed through a combination of neighbor survey forms, owner/applicant interviews, urban design analysis, project review staff interviews, and review of permit files.

Project-specific questions from the ordinance include:

- What was the cost of construction, whether a new structure or an addition or remodel of an existing structure?
- What do the neighbors think of this type of housing?
- What is the reaction of the residents of the detached ADU in terms of livability of the unit and how it could be improved?
- Was administrative Design Review cost effective for this type of small project?
- Did this project provide a design concept that would likely be applicable and acceptable in other neighborhoods?
- What were the positive results of this project? What were the negative results?
- Were there any unintended consequences that need to be resolved?

Further questions related to the housing type *in general* were also posed (some repeat); these questions are answered in the Detached ADU Project Conclusions section:

- What are appropriate development standards for detached ADUs that "fit" on a single-family lot and within a single-family neighborhood, but still allow the development of a livable unit?
- Is there a minimum lot size that would be appropriate?
- Are ADUs above garages a viable option in terms of cost to construct and fit in single-family neighborhoods?
- What do the neighbors think of this type of housing?
- What is the reaction of the residents of the detached ADU in terms of livability of the unit and how it could be improved?
- Was administrative Design Review cost effective for this type of small project?
- If Design Review is to be used for this type of development, are additional design guidelines needed to address more directly the issues relevant to detached ADUs?
- Are there certain neighborhoods or types of neighborhoods that are more appropriate for this type of housing than others?

The Magnolia detached ADU, while much taller than the primary structure, is on a large corner lot on an alley. It was the highest-rated demonstration project among neighbors, with 65% viewing its overall impact as "good."

Magnolia Detached ADU

Site Address: 3255 28th Ave W

Zoning: Single Family 5000

Neighborhood Impact Survey Results

16%	19%	65%
Bad	Neutral	Good

Project Overview

This detached accessory dwelling unit (ADU) in the Magnolia neighborhood sits at the rear of a corner lot next to an alley amidst a single family residential area. The existing primary structure is a one-story rambler built in 1934; it rests on a large 8,400 square foot lot. The home is 17'6" tall at the apex of its roof.

While almost immediately adjacent to the corner parcel's lot lines, the home is separated from the roadway by 6 feet of sidewalk and 11 feet of planting strip on 28th Ave W and 5 feet of sidewalk and 20 feet of planting strip on W Bertona St. The large planting strip serves to greatly increase the perceived size of the lot, lessening the impact of the new structure on the surrounding neighborhood.

The detached ADU structure is two stories tall, and includes a living space above a two-car garage and home office. The detached ADU is 24'1" tall at the top of its pitched roof—about five feet taller than the existing structure, but still ten feet under what zoning allows for single-family structures. The garage door of the detached ADU exits onto a 16-foot wide alley on the west side of the lot.

The detached ADU is well-designed. However, the scale, height, and other features of the existing home are not reflected in the detached ADU. The detached ADU is a more decorative structure than the main home, with more details added to its facade. The roof pitches, window sizes and facade treatments

A view of the primary structure (left) next to the detached ADU (right).

all differ from that of the main structure. However, the detached ADU does show some reflection of the existing structure's west-facing window pattern. The colors of the two structures could be considered complementary but because the tone of the detached ADU is much lighter than the primary structure, it tends to stand out rather than being a more modest counterpart. As a new structure on a very visible corner lot in an existing single-family zone, the detached ADU does fit in with

nearby homes, including those across W Bertona St. to the north, without duplicating specific treatments and finishes.

Process Evaluation

Application Excerpt

"The purpose of building an apartment over our detached garage is to have a place for an attendant to live". (The applicant is speaking of an adult care nurse.)

Demonstration Program Selection

The application materials and comments received during the Demonstration Program comment period yielded 16 individuals in favor of this project and 3 individuals opposed. The comments in opposition included dislike of additional density, the preservation of single family zoning, the perception of ADUs as multi-family structures or zoning, increased traffic, and dislike of rentals or tenants. None of the immediately adjacent neighbors were opposed to the application.

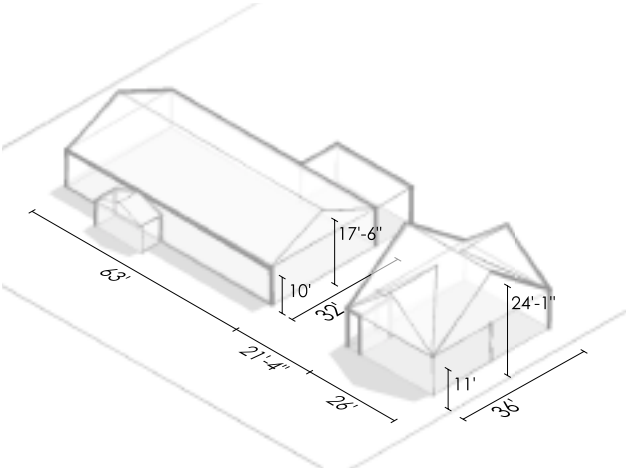

Detached ADU relationship to primary structure

Development Standard Departures

The development standard departure needed and granted for the proposed project was for height. Accessory structures are permitted up to twelve feet in height under existing zoning;

Relationship of the primary structure and the detached ADU to the general bulk, scale, and location of nearby structures.

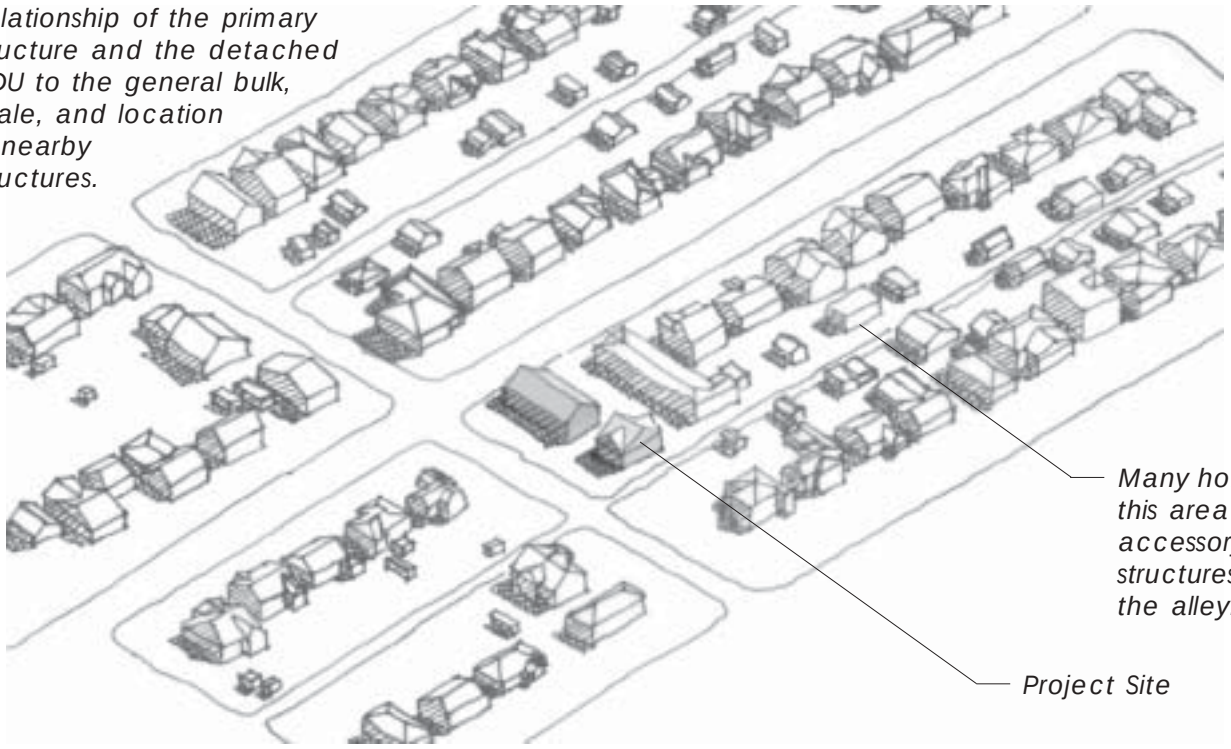

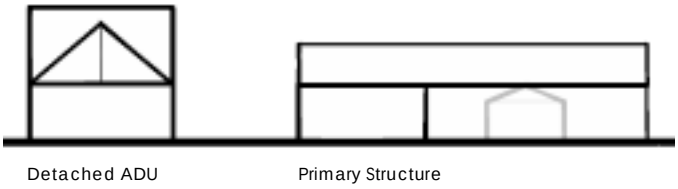

North Elevation

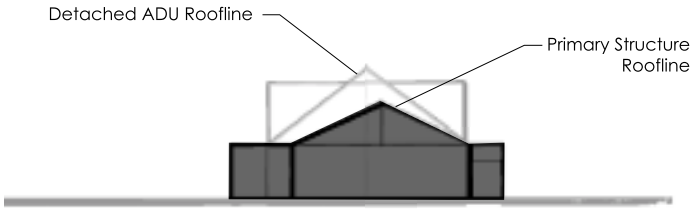

East Elevation

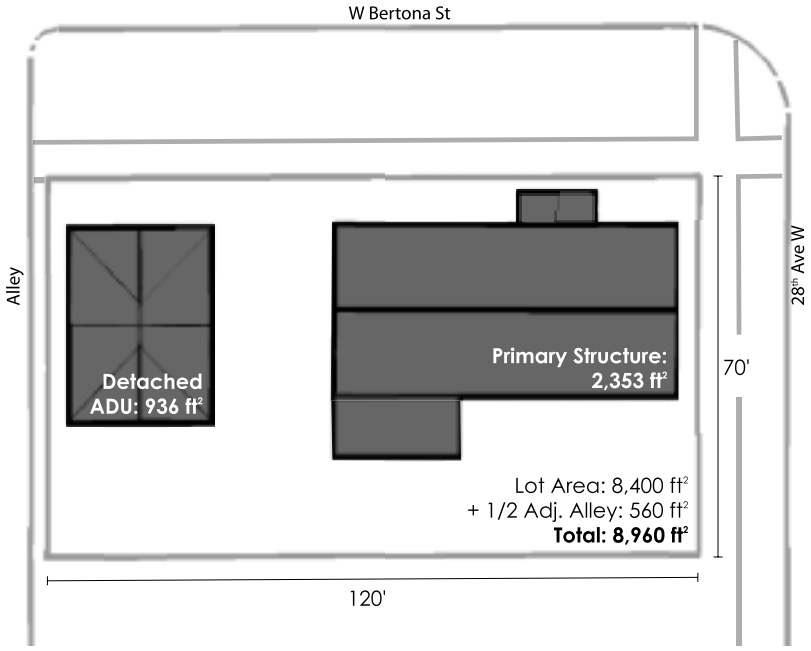

Total lot coverage: 37%

the built structure is 24' 1". The Demonstration Program allowed up to two stories without a maximum specified measurement.

Application of Design Guidelines

A Land Use Planner provided the following design guidance to assist the project in meeting the intent of the Citywide Design Guidelines: (The full text of design guidance may be found in the appendices.)

- The garage doors should face the existing alley.
- Eliminate the curb cut and driveway on West Bertona St. and utilize the improved alley.
- Minimize the height and bulk of the proposed building:
- Reduce the bulk of the second story by making it smaller than the garage level and by eliminating the second floor cantilever;
- Integrate the second floor walls with the roof structure;
- Imbed the deck into the second floor rather than thrusting it forward beyond the building walls;
- Internalize the staircase within the basic building footprint; and
- The new structure should complement the neighborhood architectural styles but not emulate the scale.
- Design details and proportions of the proposed structure should echo those of the surrounding neighborhood.
- The design of the garage should incorporate two doors or panels rather than one wide garage door.
- The landscaping already makes use of trellises and other garden features.
- Elimination of the driveway and curb cut will reinforce the existing garden along the W. Bertona St. side of the house and provide the opportunity to screen the lower portion of the proposed structure from the street.

What was the cost of construction, whether a new structure or an addition or remodel of an existing structure?

The owner stated that their costs were around $200,000 for the detached ADU.

Was administrative Design Review cost effective for this type of small project?

The Design Review process resulted in several major changes to the siting and design of the project. The footprint of the project changed slightly to include the home office space next to the garage, which was originally facing the street, but was directed to instead face the alleyway. A large deck that was proposed was removed, and roof pitches were increased to help reduce the scale of the project.

Based on comparisons between early drawings of this project and the final constructed project, there is no doubt that the administrative design review process was successful in improving the fit of this detached ADU into the neighborhood as a whole.

This project's land use and design review took a total of 49.25 hours, and the fee for this part of the review was $3,593 (1.8% of the total costs). The building permit cost was $2,053.50, bringing the total permitting fees to $5,646.50.

Magnolia Detached ADU Project Statistics

Lot Size	8,400 ft^2
Lot Width	70 ft
Lot Depth	120 ft
Alley Width	28.5 ft
Primary Structure Height	17.5 ft
Detached ADU Pitch Height	24 ft
Detached ADU Height/Lot Width Ratio	0.34
Detached ADU Base Height	11 ft
Main Structure Footprint	2,353 ft^2
Detached ADU Footprint	936 ft^2
Total Lot Coverage	37%
Approximate Gross Floor Area	1,872 ft^2 (includes garage)
Detached ADU FAR (approx.)	0.21
Minimum Side Yard Setback	9 ft to street
Minimum Rear Yard Setback	4 ft to alley
Estimated Cost of Construction	$200,000
Approx. Cost per ft^2 Floor Area	$107/ft2
Land Use Permit Fees (includes Design Review)	$3,593
Land Use Permit Fee/Est. Cost of Construction	1.8%
Building Permit Fees	$2,053.50
Building Permit Fees/Est. Cost of Construction	1%

A view of the main home from across the street.

Neighborhood Sentiment

What do the neighbors think of this type of housing?

The project initially had support through the Demonstration Program selection process and it maintains neighborhood support now that it is constructed. The chart on the previous page shows how this project was rated in the surveys that were sent to neighbors within 300 feet of the project. The project rated on the "good" side across all categories without the usual rating dip in Parking and Traffic impacts.

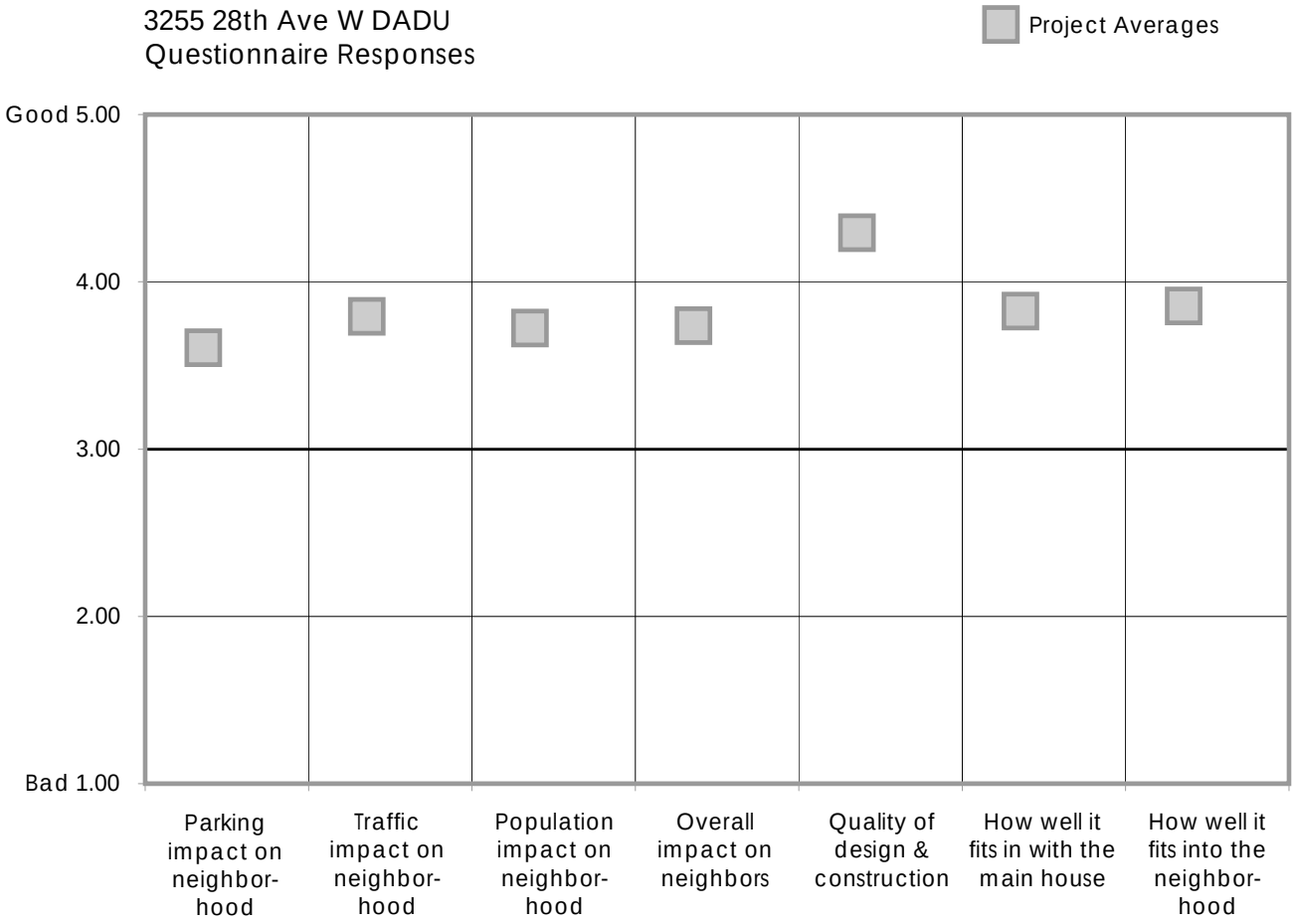

While taking pictures of the project, an elderly woman walked by with a child, and she casually remarked that she thought the owners did a wonderful job building the structure and that it fit right in with the neighborhood. This project rated the highest in surveys compared to the other constructed detached ADU projects.

Were there any unintended consequences that need to be resolved?

Among the survey form responses for this project, only one neighbor indicated a potential unintended consequence of this detached ADU:

"Detached ADU should not appear larger than the existing structures."

No other survey forms listed any specific consequences.

The detached ADU features a double garage along an alley.

What is the reaction of the residents of the detached ADU in terms of livability of the unit and how it could be improved?

Thus far, no tenants have resided in the detached ADU. One of the owners is differently abled, and the dwelling is meant to house a nurse, who will eventually be needed as the owners age.

Conclusions

What were the positive results of this project? What were the negative results?

The differences in height, color, and scale between the primary structure and the detached ADU create a perception of excess bulk of the accessory structure. The amount of floor area of the structure (particularly on its second story), while within the parameters allowed through the Demonstration Program, tends to dominate the shorter home it is supposed to be subordinate to.

The quality of design and construction was rated on the "good" side of the scale more than any other issue presented in the questionnaire. Further, the large size of the lot that it sits on, the fact that it is on a corner and next to an alley, and the fact that it has a large landscaped planting strip separating the sidewalk from the street, reduce the appearance of more bulk than might be the case if this detached ADU were located in a neighborhood with smaller lots. In addition to the size of the lot, the finer details used in the project, including rounded windows, corner eaves, and trim, contribute to the neighborhood's high scores on quality of design and construction.

The detached ADU is clearly taller than the primary structure.

Did this project provide a design concept that would likely be applicable and acceptable in other neighborhoods?

Ultimately, the project is acceptable to the neighborhood because it was well designed on a large site—these factors would likely contribute to its acceptance in other neighborhoods, as well.

Lessons Learned

Issues and successes that this project bring to light in considering new development standards, design guidelines, and processes include:

- the importance of early Design Review direction to ensure that elements meant to decrease perceived scale are included in the final built project:
  - using the administrative design review process in shaping detached ADUs;
- balancing neighborhood architectural compatibility versus primary structure compatibility in the Design Review process used to allow detached ADUs;
- ensuring a proper maximum allowed height of detached ADUs to limit perceived bulk and scale, privacy, and shadow impacts;
- limiting the total allowed floor area of detached ADUs to further ensure scale compatibility and neighborhood fit:
  - using floor area ratios to regulate the size of detached ADUs to ensure a proper fit;
  - maintaining a maximum amount of lot coverage when adding a detached ADU;
- requiring a minimum lot size for new detached ADUs to limit crowding; and
- using development standards that favors alleys.

The original street-facing elevation submitted for Early Design Guidance

The North Capitol Hill detached ADU was one of the highest-rated Demonstration Projects among neighbors, even though it had some neighborhood opposition in its early conceptual stages.

North Capitol Hill Detached ADU

Site Address: 2211 Federal Ave E

Zoning: Single Family 5000

Neighborhood Impact Survey Results

14%	30%	56%
Bad	Neutral	Good

The detached ADU replaced an existing garage, and includes a loft space for sleeping (upper right of structure).

Project Overview

This one-and-a-half story detached ADU sits behind a single family home on the north slope of Capitol Hill. The lot is on the edge of a single-family zoned area, adjacent to a lowrise multifamily zone along 10th Ave E. The existing primary structure is a two-story home built in 1906; it rests on a 4,000 square foot lot. The home is 30' tall at the apex of its roof.

The detached ADU structure, tucked behind the main home and barely noticeable from the street, replaced an existing detached garage. The detached ADU is 16'6" tall at the top of its highest roof pitch—almost fifteen feet shorter than the existing structure. Parking for the detached ADU is provided in a driveway alongside the main structure.

The most notable characteristic of this project is how well the detached ADU matches the existing structure in scale, materials, and architectural features. The height of the detached ADU is consistent with trim on the main structure (see south and east elevation diagrams), the roof pitches of the two structures are similar, window scale and treatments are similar, colors are complementary, and the facade materials of both structures match all the way to the rounded shingles found under the eaves.

The area around the detached ADU is also heavily vegetated, preserving privacy for residents of the unit, the primary structure, and the adjacent dwellers.

Process Evaluation

Application Excerpt

"This project received a 'should be built' rating from the jury of the (Seattle) American Institute of Architects

Housing Demonstration Competition. 'Just the kind of idea this program wants to encourage' was one juror's comment."

Demonstration Program Selection

The application materials and comments received during the Demonstration Program comment period yielded a number of responses from individuals opposed to this project (and several in favor), for reasons including dislike of additional density, the preservation of single family zoning, the perception of ADUs as multifamily structures or zoning, increased traffic, and dislike of rentals or tenants. Many of the opposition comments received were on form letters circulated by a neighbor in the adjacent multifamily zone, who was particularly concerned with the height of the detached ADU and the perceived effect on her privacy.

Development Standard Departures

Two development standard departures granted for the proposed project were for allowed height and rear yard lot coverage. Accessory structures are permitted up to 12 feet in height under existing zoning; the built structure is just over 16 feet. The Demonstra-

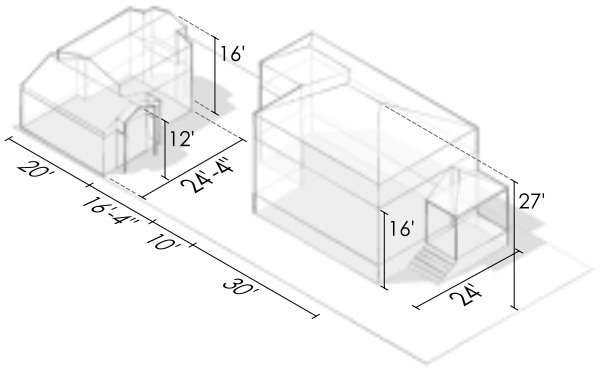

Detached ADU relationship to primary structure

Relationship of the primary structure and the detached ADU to the general bulk, scale, and location of nearby structures.

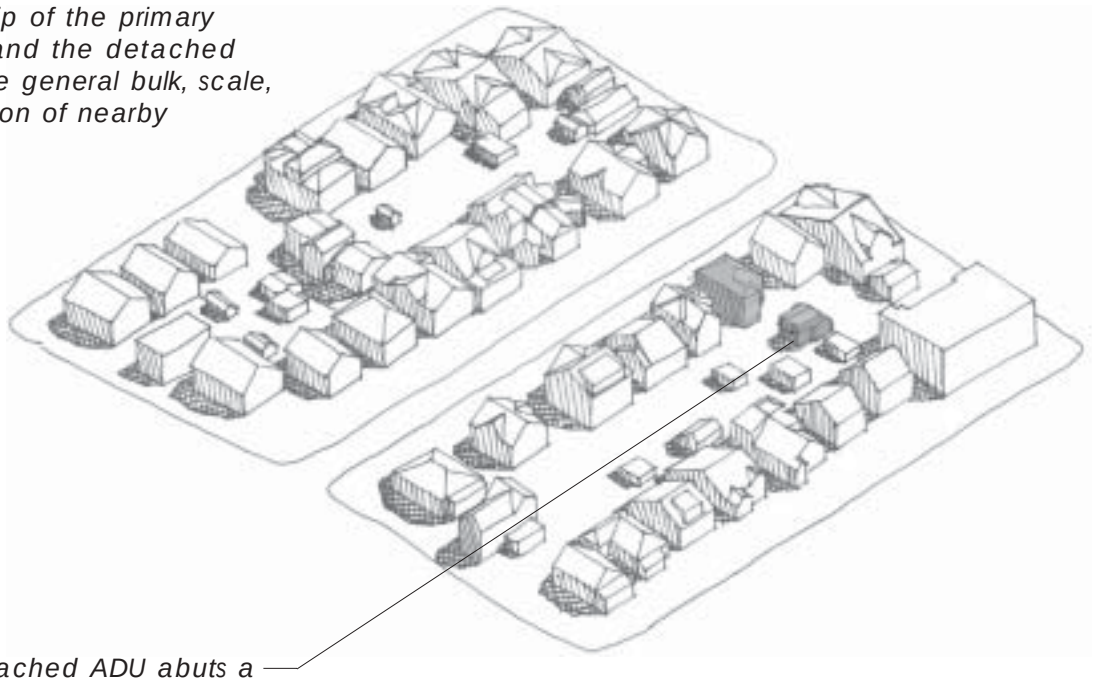

The detached ADU abuts a multifamily residential area.

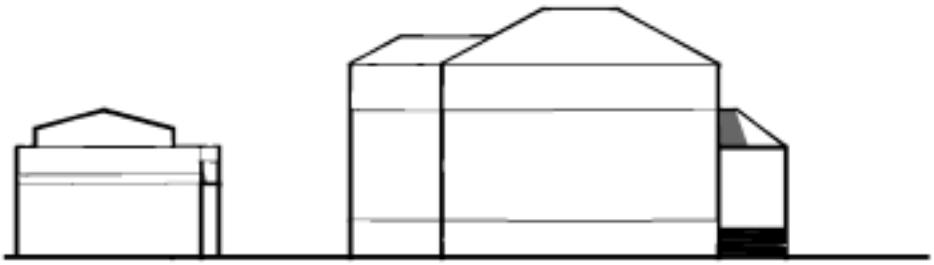

South Elevation

East Elevation

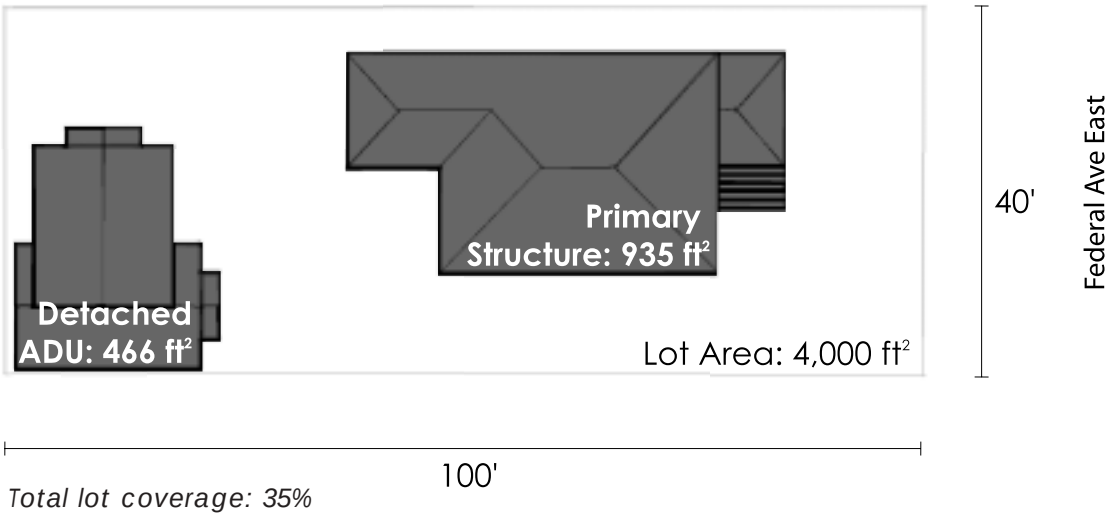

Total lot coverage: 35%

The primary structure and the detached ADU share similar details and have a relationship in scale.

tion Program allowed up to two stories without a maximum specified measurement.

The proposed detached accessory dwelling unit uses an existing detached garage and has been designed to complement the principal dwelling unit. Information submitted by the applicant indicates that the proposed structure height of 16.5 feet setback approximately three feet from the property line would not create more shading on the west lot than a code-complying garage located on the property line. Additionally, the proposed design breaks up the bulk of the structure and enables the retention of a mature cherry tree; both of these details could be lost with a code-complying alternative.

Application of Design Guidelines

A Land Use Planner provided the following early design guidance to assist the project in meeting the intent of the Citywide Design Guidelines:

- Window openings along the west side of the structure should be limited and should be either opaque or designed in such a way as to create minimum visual access onto adjacent property.

North Capitol Hill Detached ADU Project Statistics

Lot Size	4,000 ft^2
Lot Width	40 ft
Lot Depth	100 ft
Alley Width	N/A
Primary Structure Height	27 ft
Detached ADU Pitch Height	16 ft
Detached ADU Height/Lot Width Ratio	0.400
Detached ADU Base Height	14 ft
Main Structure Footprint	935 ft^2
Detached ADU Footprint	466 ft^2
Total Lot Coverage	35%
Approximate Gross Floor Area	728 ft^2
Detached ADU FAR (approx.)	0.18
Minimum Side Yard Setback	<1 ft
Minimum Rear Yard Setback	~1 ft
Estimated Cost of Construction	$95,000
Approx. Cost per ft^2 Floor Area	$130/$ft^2$
Land Use Permit Fees (includes Design Review)	$1,470.50
Land Use Permit Fee/Est. Cost of Construction	1.5%
Building Permit Fees	$998
Building Permit Fees/Est. Cost of Construction	1%

- The proposed structure should contain similar colors, building materials and architectural style as the principal structure.
- The large cherry tree in the rear yard should be retained. Excavation should preserve the integrity of the tree roots.

The applicant included these elements in the design of the detached ADU prior to the review process.

What was the cost of construction, whether a new structure or an addition or remodel of an existing structure?

DCLU's listed construction value is $41,400, and the owner concurred with that estimate. The permit fees for this project were lower than normal in part because it was a renovation of an existing structure. As the owner performed the design and renovation himself, many of the usual contracting expenses were saved, and he estimates that otherwise the structure would have been around $95,000.

Was administrative Design Review cost effective for this type of small project?

Because of the overall merits of the project, it was allowed to go forward once a modified design was presented with shorter height and less bulk (5 feet shorter and reduction of approximately 240 square feet of floor area from the second story). Review took a total of 26.75 hours, and the total permit fees came to $2,468.50 (about 2.6% of total estimated costs).

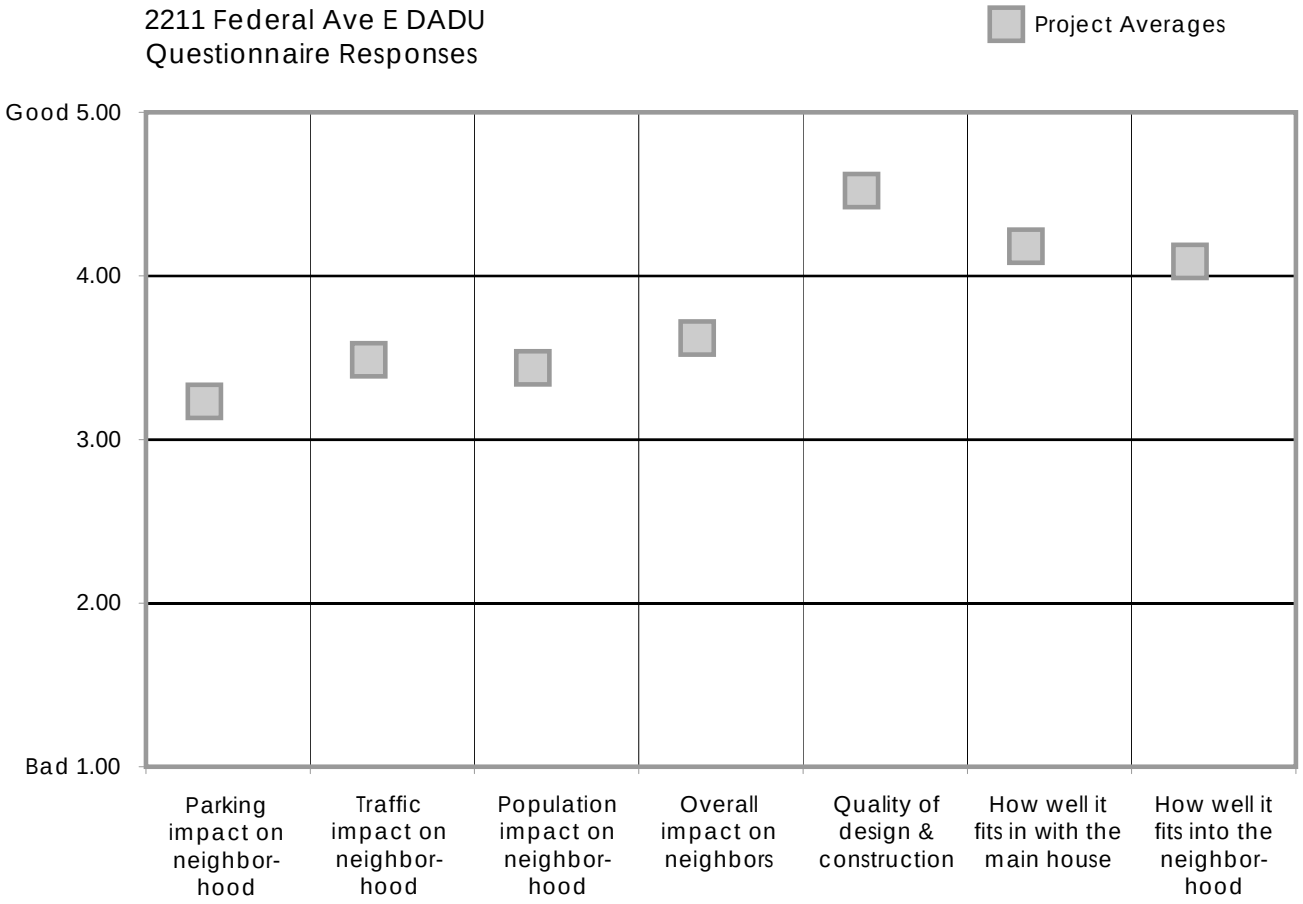

Neighborhood Sentiment

What do the neighbors think of this type of housing?

The project initially had little support through the Demonstration Program selection process. After requesting that the applicant lower the height and reduce the bulk of the proposed structure, it was allowed to go forward, and survey results show that neighborhood sentiment about the project has improved. This indicates that some combination of either participation of neighbors in design review, the quality of design and construction, or the smaller size of the structure made it more acceptable to the surrounding neighborhood.

The chart on the previous page shows how this project was rated in the surveys that were sent to neighbors within 300 feet of the project. The project rated on the "good" side across all categories with a rating dip in "Parking impact."

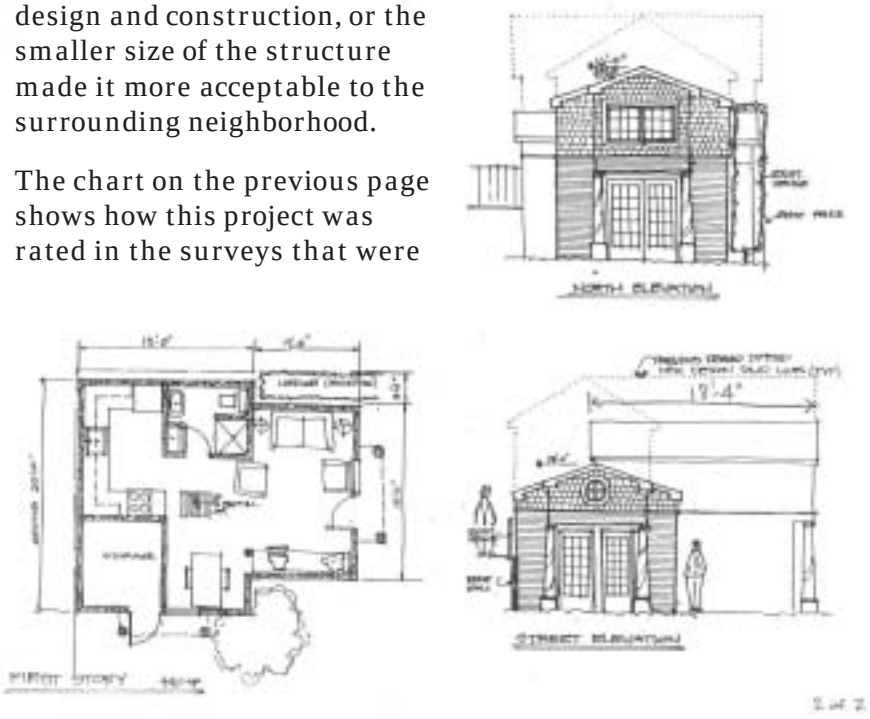

Revisions made to the original proposal including a reduction in height and bulk resulted in more neighborhood acceptance.

The project rated the second highest (barely below 3255 28th Ave W) in surveys compared to the other constructed detached ADU projects (see page 6). It also received the highest marks among all demonstration projects for the categories "Quality of design & construction," "How well it fits in with the main house," and "How well it fits into the neighborhood."

Were there any unintended consequences that need to be resolved?

No specific unintended consequences came up in the neighborhood surveys, although comments about parking were made:

"The many cars parked by their house are unsightly."

"The zoning is already tight. Neighbors are too close as it is. There's no parking!"

On-street parking was known to be difficult to find prior to the construction of the detached ADU. The owner did provide an off-street space for the new unit.

What is the reaction of the residents of the detached ADU in terms of livability of the unit and how it could be improved?

The tenant specifically requested their privacy be respected and declined to answer questions. However, the owner let us know that the tenant is happy with her living situation and has rented the unit for several years now.

Conclusions

What were the positive results of this project? What were the negative results?

The Capitol Hill detached ADU is an excellent example of how matching scale and materials to the primary structure can improve a project. The success of the design is also due to the applicant, an architect who took care to design a structure that complements his home.

The North Capitol Hill project fits in its surroundings. Had the unit been taller and larger, as originally designed, it might have been less acceptable to the neighbors, and may have had a greater impact on privacy. Privacy impacts can be mitigated primarily by structure placement and setbacks, and secondarily by window placement and landscaping and screening. Options for structure placement and setbacks are narrow on the subject lot, which is representative of the surrounding neighborhood in it size, dimension, and single family structure size and configuration.

Did this project provide a design concept that would likely be applicable and acceptable in other neighborhoods?

This detached ADU is another example that demonstrates that good design can improve acceptance of these housing types in other neighborhoods.

Lessons Learned

Issues and successes that this project bring to light in considering new development standards, design guidelines, and processes include:

- limiting the height and scale to reduce the perception of bulk of detached ADUs;
- requirements for matching or similar detached ADU scale and materials to the existing home;
- locating detached ADU windows away from adjacent properties to minimize privacy issues;
- landscape requirements to limit privacy impacts for detached ADUs; and
- using a discretionary review process in shaping detached ADUs.

The North Capitol Hill detached ADU replaced an existing garage at the end of the driveway. Its finishes duplicate the main structure.

The tenant of the detached ADU has their own private pathway and outdoor area.

Green Lake Detached ADU

Site Address: 5420 Kirkwood Pl N

Zoning: Single Family 5000

Neighborhood Impact Survey Results

19%	22%	59%
Bad	Neutral	Good

Project Overview

This detached ADU rests behind a single family home above a garage on an alley in the Green Lake neighborhood. The lot is in the midst of a single-family zoned area, not far from the old "Honey Bear Bakery" site. The existing primary structure is a two story, Craftsman-style home built in 1920; it rests on a 5,000 square foot lot, and is 23 feet tall at the top of its pitched roof.

The primary structure is a classic Craftsman-style home.

The detached ADU sits on an alley above a two-car garage, next to a one-car garage with patio above.

The detached ADU structure sits above a redeveloped detached garage on the alley and is difficult to notice from the street. It is 22 feet tall from the alley to the apex of its roof, but sits several feet lower than the main home because of a drop in grade in the back yard. A portion of the 3-car garage structure has a deck with railing above adjacent to the single-floor living area.

The design of this detached ADU reflects many of the architectural features of the main home, including the pitch of dormers, soffit braces, and trim emphasizing building features such as corners and windows. The new unit has a very complementary color (a darker shade of blue) to its larger counterpart.

Many of the surrounding homes have a Craftsman-style architecture, which this detached ADU also reflects. Additionally, many other accessory structures (garages) line the alley here, including one with a small working space above it and one with a legally grandfathered accessory dwelling unit above it.

Process Evaluation

Application Excerpt

"Our neighbors support our proposal and we are designing the building to be sensitive to privacy and light concerns (See letters of support.) Our immediate neighbors to the south...have rented the studio apartment over their garage for over 40 years without any adverse effects on the neighborhood."

Demonstration Program Selection

Letters received during the Demonstration Program comment period included responses from individuals opposed to this project, for reasons including dislike of additional density, the preservation of single family zoning, the perception of ADUs as multifamily structures or zoning, increased traffic, loss of privacy, and dislike of rentals or tenants.

Development Standard Departures

Through design review, one development standard departure was granted for the proposed project: the allowed height. Accessory

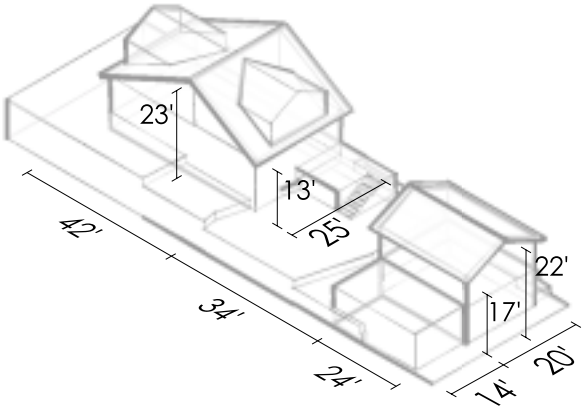

Detached ADU relationship to primary structure

Relationship of the primary structure and the detached ADU to the general bulk, scale, and location of nearby structures.

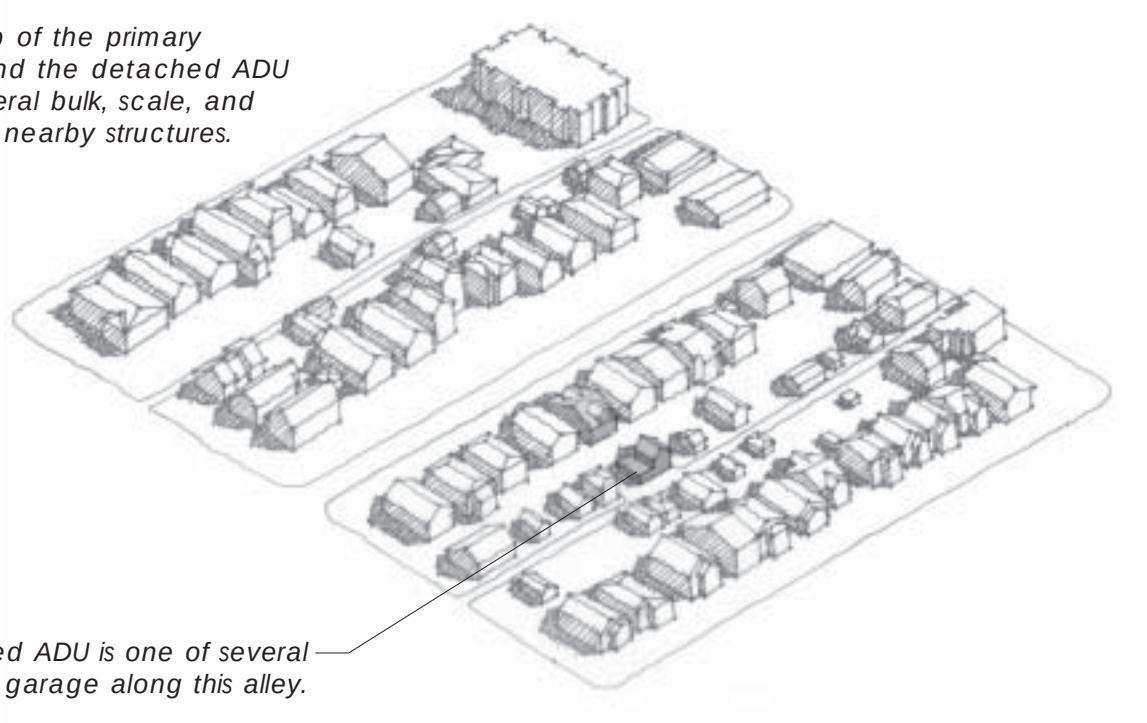

The detached ADU is one of several above a garage along this alley.

Southeast Elevation

Northeast Elevation

Total Lot Coverage = 40%

structures are permitted to 12 feet in height under existing zoning; the built structure is 22 feet along the alley and just over 16 feet on the side facing the main home. The Demonstration Program allowed up to two stories without a maximum specified measurement.

Application of Design Guidelines

A Land Use Planner provided the following design guidance to assist the project in meeting the intent of the Citywide Design Guidelines:

- There are other garages with dwelling or work space above them along the westerly side of the alley that are built into the slope to reduce the mass when viewed from the main dwelling. The proposed structure should blend with these existing garages in form, structure and materials.
- Architectural elements and/or landscaping materials should be incorporated into the deck to preserve the privacy of the residents and the neighbors but not block air and sunlight.
- Adequate room for pedestrian access to the garages and vehicles should be included.
- Protected storage areas for trash cans and recycling bins should be included.
- The proposed roof line and pitch matches the roofs of the majority of the other garages and of the surrounding dwellings. The applicant should consider architectural elements which preserve the roof

line and which also make the roof line appear less dominating over the alley.

- To address issues associated with the bulk of the proposed structure and the solid alley facade, architectural elements should be incorporated into the facade which break it down into individual garage elements.
- The individual garage doors should be designed so that they are not a flat blank facade.
- The applicant is encouraged to add elements of architectural interest which distinguish the proposed structure and identify the upper floor as residential while complementing the neighborhood architectural character. Architectural treatments could include window shutters, knee braces and other craftsman style elements.
- Landscaping could be incorporated to soften the impact of the new structure.
- Creative choice of materials and design and layout of landscaping should complement the existing neighborhood vegetation and preserve the privacy of the residents of the ADU and the surrounding neighbors.

Green Lake Detached ADU Project Statistics

Lot Size	5,000 ft^2
Lot Width	40 ft
Lot Depth	125 ft
Alley Width	15 ft
Primary Structure Height	23 ft
Detached ADU Pitch Height	22 ft
Detached ADU Height/Lot Width Ratio	0.55
Detached ADU Base Height	17 ft
Main Structure Footprint	1,294 ft^2
Detached ADU Footprint	836 ft^2 (includes garages)
Total Lot Coverage	40%
Approximate Gross Floor Area	1,336 ft^2 (includes garages)
Detached ADU FAR (approx.)	0.26
Minimum Side Yard Setback	1 ft
Minimum Rear Yard Setback	5 ft to alley
Estimated Cost of Construction	$152,484.70
Approx. Cost per ft^2 Floor Area	$114/$ft^2$
Land Use Permit Fees (includes Design Review)	$3,394.50
Land Use Permit Fee/Est. Cost of Construction	2.2%
Building Permit Fees	$1,417.50
Building Permit Fees/Est. Cost of Construction	1%

The color and style of the detached ADU complements the main home well.

What was the cost of construction, whether a new structure or an addition or remodel of an existing structure?

The applicant provided a list of their expenses, totaling $152,484.70.

Was administrative Design Review cost effective for this type of small project?

This project's land use and design review took a total of 49.25 hours, and the fee for this part of the review was $3,394.50 (2.2% of the total cost). The building permit cost was $1,417.50, bringing the total to $4,812.

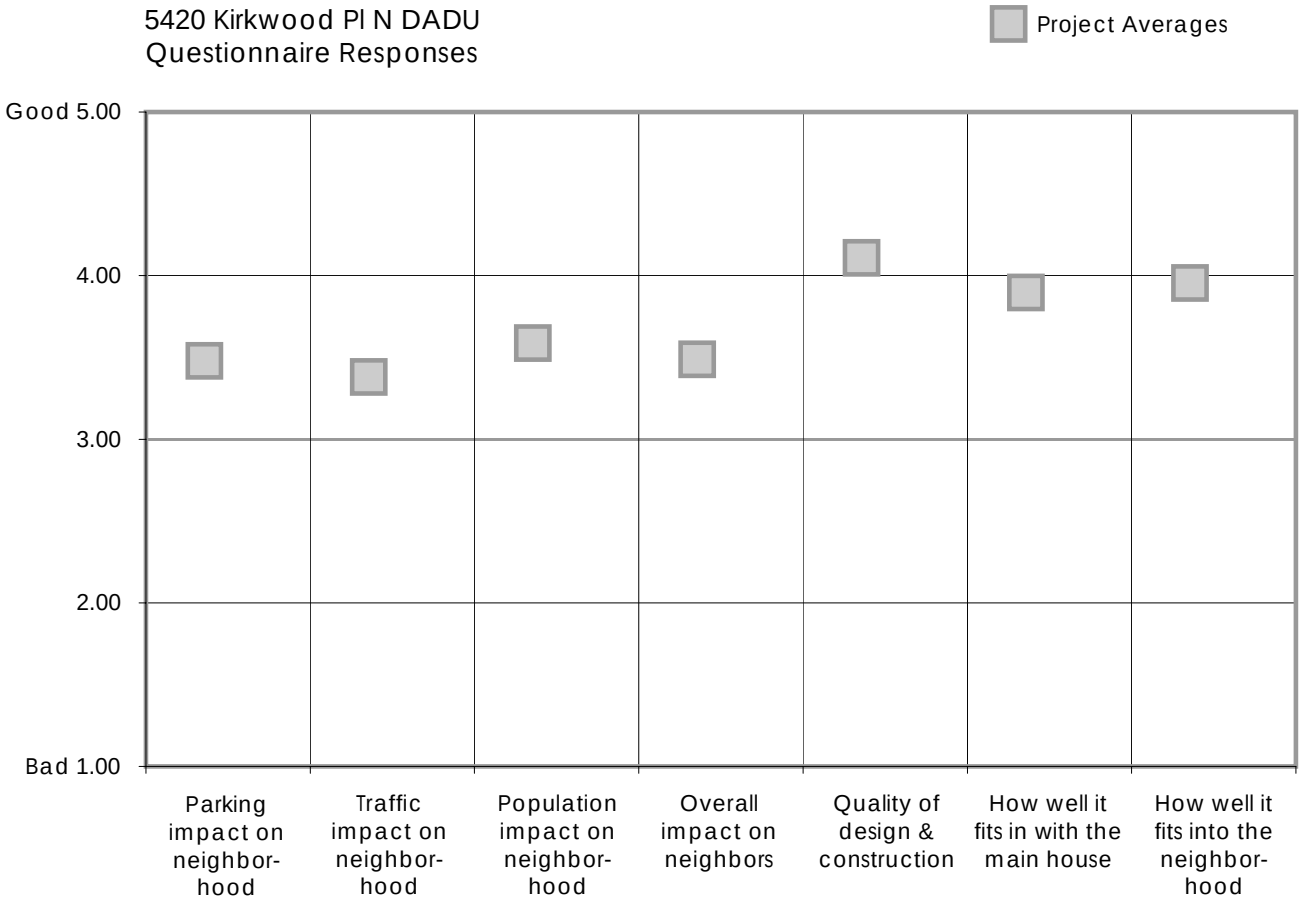

Parking is allowed only on one side of the street; this contributed to some negative responses related to parking in the surveys.

Neighborhood Sentiment

What do the neighbors think of this type of housing?

The project initially had a mix of support and opposition through the Demonstration Program selection process. Based on the overall merits of the project, it was allowed to go forward, and survey results show that neighborhood sentiment about the project is for the most part very positive. The chart on the previous page shows how this project was rated in the surveys that were sent to neighbors within 300 feet of the project. While the project did have some detractors, it still had general support across all categories from the neighbors.

Were there any unintended consequences that need to be resolved?

Only one comment from the survey forms sent to the neighbors indicated an unintended consequence, which is more a social consequence than a physical one:

"The owners who built this fought for years to do so against all the neighbors wishes. They built the extra house - sold everything within a year and now we are left with the change. What purpose does this serve? It created much animosity in the neighborhood. It now houses one person."

This is not a consequence that is easily resolved, and it should be noted that the owners relocated to another city for professional reasons. It is conceivable that a change to the existing single-family structure could have been made prior to the owners moving away, also serving to create some animosity between neighbors. Further, both before and after the detached ADU was built, it was in fact found that more neighbors supported the project than opposed it.

What is the reaction of the residents of the detached ADU in terms of livability of the unit and how it could be improved?

The lot was sold recently and the detached ADU is not presently being used to house a tenant.

The vegetation helps screen the detached ADU on one side.

Several other accessory structures, including legal "grandfathered" detached ADUs, line the alley.

Conclusions

What were the positive results of this project? What were the negative results?

This detached ADU is a positive example of small-scale infill housing on an alley that is sensitive in scale and form to the primary structure on the lot and surrounding properties. The dwelling itself is the smallest among those selected through the Demonstration Program although adding the garages to the total floor area of the accessory structure, the structure does have the highest floor-to-lot-area ratio of all the detached ADUs selected.

Did this project provide a design concept that would likely be applicable and acceptable in other neighborhoods?

The presence of several other accessory structures along the alley, including at least one other detached ADU, create a context that this project works well within. This concept could be acceptable in other neighborhoods with alleys because of its scale and attention to design details.

Lessons Learned

Successes and issues of this project that will be used in considering new development standards, design guidelines, and processes include:

- requirements for matching detached ADU scale and materials to the existing home;
- limiting the height and scale to reduce the perception of bulk of detached ADU, including using floor area ratios to regulate the size of detached ADUs to ensure a proper fit;
- maintaining a maximum amount of lot coverage when adding a detached ADU;
- limiting the footprint of detached ADUs to reduce open space impacts;
- landscape requirements to limit privacy impacts for detached ADUs; and
- treatment of blank walls.

Top: detached ADU on right. Bottom: detached ADU on left. The colors of the detached ADU are complementary to the main home without exactly matching it.

Clever design makes limited space more livable.

The view from the top floor of the detached ADU looks down into the neighbors back yard. A new "skinny" house is also visible in the distance.

Licton Springs Detached ADU

Site Address: 8540 Interlake Ave N

Zoning: Single Family 5000

Neighborhood Impact Survey Results

41%	*22%*	*37%*
Bad	*Neutral*	*Good*

The detached ADU is visible at the end of the driveway, behind the primary structure.

Project Overview

This detached ADU project in the Licton Springs neighborhood near Green Lake replaced an existing accessory dwelling unit in a detached structure with a larger dwelling. The main structure is a Craftsman-style home constructed in 1921 on a 49- by 107-foot lot. The lot is zoned single family and is across the street from Lowrise 1 multifamily zoning, several blocks from the busy and congested intersection of N 85th Street and Aurora Avenue N. Much of the housing in this area are rentals.

The new detached ADU is approximately the same footprint of the old; however, the new structure is two stories tall. The detached ADU continues to house the same tenant who lived in the previous structure since 1988. It sits five feet from the rear lot line and four feet from the side lot line, and is 19 feet tall at the top of its roof pitch. When the detached ADU was developed, a parking space was added, providing one space for the main home and one for the detached ADU. The parking is located on a driveway adjacent to the house, leading to the detached ADU.

The color of the detached ADU does not match but does complement the main structure. It offers a similar roof pitch, similarly scaled windows, and matching window trim. The design reduces the appearance of bulk on its north side by lowering the bottom of the roof pitch and notching the footprint back at its corners. This detached ADU has the smallest bulk relative to the size of the lot it is on among all the selected projects.

Viewed from the neighbor adjacent to the rear lot line (to the east), the height of the structure may seem somewhat imposing, and this is further accentuated by its slightly higher elevation and the lightly colored, contrasting second story. The installation of a fence has

been helpful in alleviating this - as would the use of opaque glass in the window facing the neighbor's back yard.

Process Evaluation

Application Excerpt

"I dedicated three evenings distributing information and talking to my neighbors. A handout provided each person with project specific information and the intentions of the Design Demonstration Project competition. We met for a total of approximately 6 hours reviewing drawings, models, photos, and existing site conditions. Out of all the people surveyed not one was opposed to the idea of rebuilding the detached ADU. In fact the majority expressed that they couldn't understand why it was not legal to begin with."

Demonstration Program Selection

This project was selected as a "should be built" in the 1999 AIA Design Demonstration Project competition. DCLU received only one letter of opposition during the comment period required for the Demonstration Program, and the applicant included signatures from several people that were supportive of the project in their original Demonstration Program application.

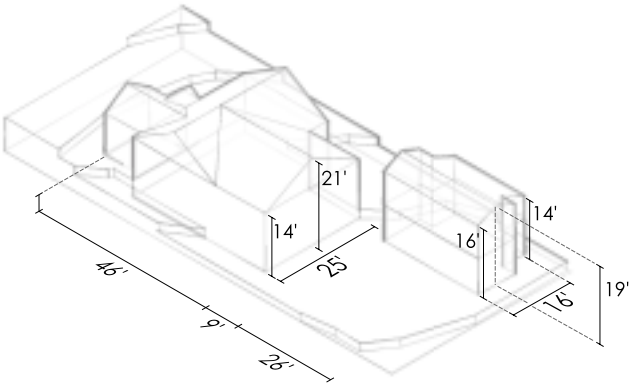

Detached ADU relationship to primary structure

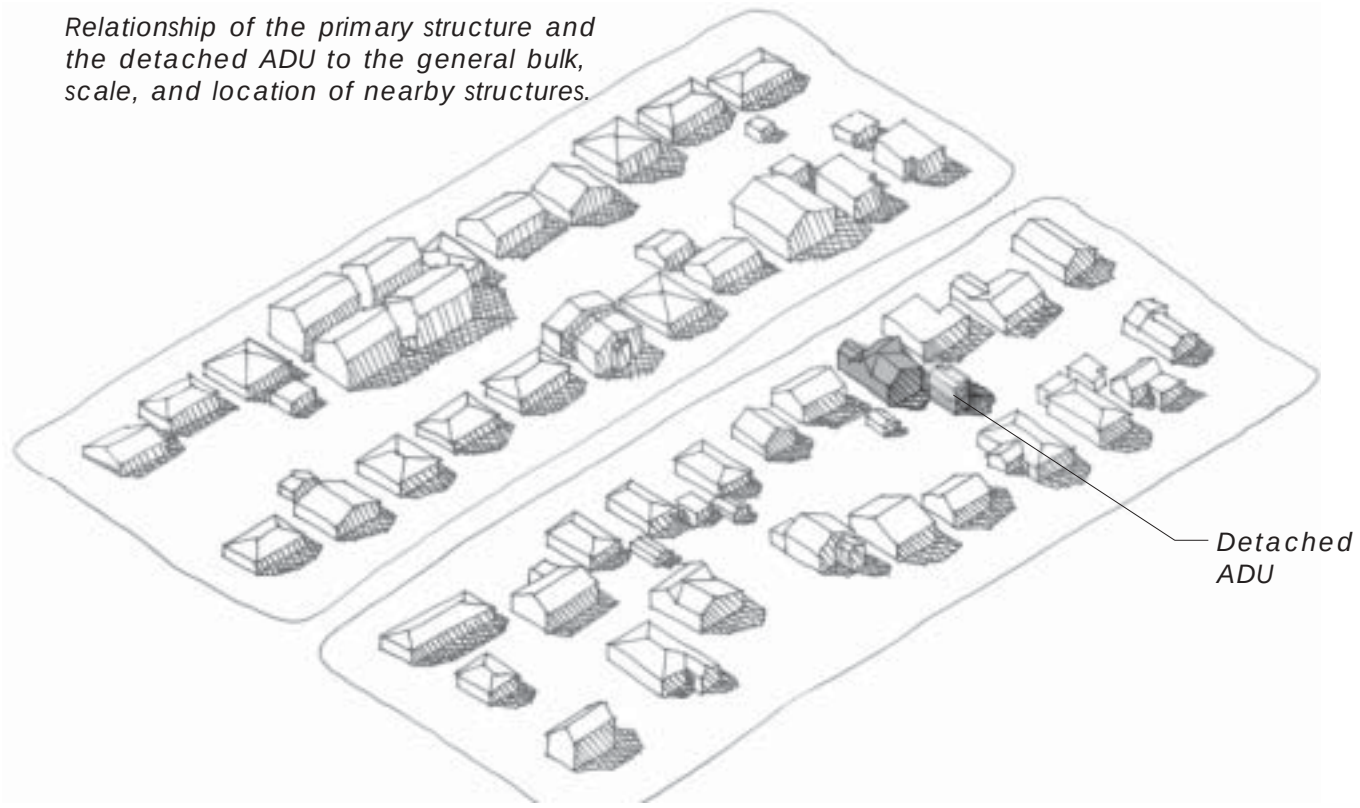

Relationship of the primary structure and the detached ADU to the general bulk, scale, and location of nearby structures.

South Elevation

East Elevation

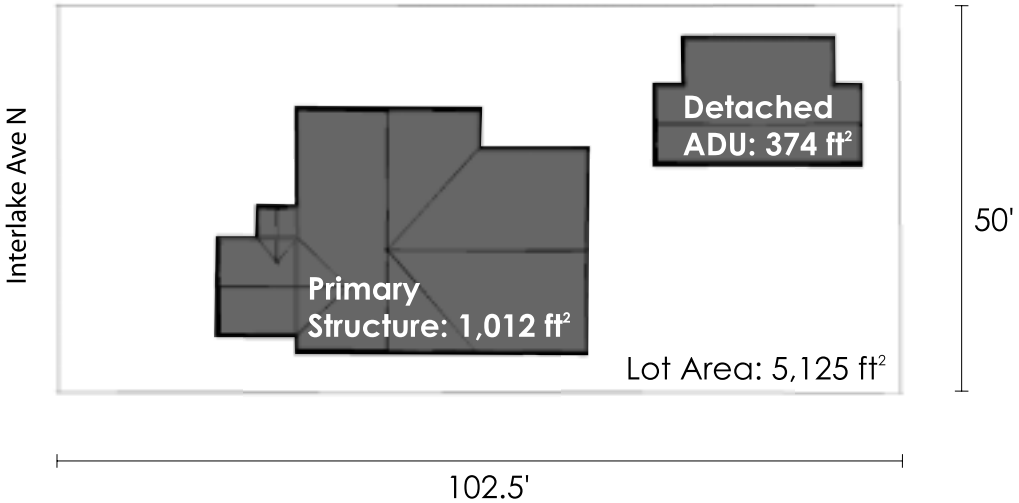

Total Lot Coverage = 27%

Development Standard Departures

Approximately seven extra feet of height beyond what is allowed for accessory structures was granted to accommodate a bedroom and bathroom. This amount of height was found to not create excessive shadowing of the neighboring properties.

The applicant originally requested a two foot side yard setback, which would have provided insufficient space to maintain the detached ADU, unless a side yard easement had been agreed to by the neighbor. The applicant accepted the guidance of the Department and increased the side setback to four feet.

The required rear yard setback for this lot would be 20.4 feet. The Department suggested that the applicant increase the rear setback from the proposed four feet, and the applicant responded with photographs and diagrams that showed an old lilac tree that would be lost if the building had to be moved closer to the street. It is also most efficient for the detached ADU to be as far back in the corner of the lot as possible, in order to maximize the usable open space on the site. The neighbor to the east has a small shed near the property line. Setting the cottage five feet from the rear property line was found to be neither disruptive to the integrity of the project site nor the neighboring property to the east.

Application of Design Guidelines

A Land Use Planner provided the following design guidance to assist the project in meeting the intent of the Citywide Design Guidelines:

- Some increase in the setbacks may be required unless easement agreements with the neighbors are recorded.
- To reduce the appearance of a full two-story residence, the upper level should be integrated under the roof.
- The pitch of the roof should be increased to be in keeping with that of the main house.
- Windows and other elements of the structure should be placed more in line with each other.
- The massing of the building should appear more traditionally residential.

The inclusion of this flower bed was suggested in the Administrative Design Review process.

Licton Springs Detached ADU Project Statistics

Lot Size	5,125 ft2
Lot Width	50 ft
Lot Depth	102.5 ft
Alley Width	N/A
Primary Structure Height	21 ft
Detached ADU Pitch Height	19 ft
Detached ADU Height/Lot Width Ratio	0.38
Detached ADU Base Height	14 ft
Main Structure Footprint	1,012 ft2
Detached ADU Footprint	374 ft2
Total Lot Coverage	27%
Approximate Gross Floor Area	748 ft2
Detached ADU FAR (approx.)	0.15
Minimum Side Yard Setback	4 ft
Minimum Rear Yard Setback	5 ft
Estimated Cost of Construction	$138,800
Approx. Cost per ft^2 Floor Area	$186/ft2
Land Use Permit Fees (includes Design Review)	$1,952
Land Use Permit Fee/Est. Cost of Construction	1.4%
Building Permit Fees	$1,316.50
Building Permit Fees/Est. Cost of Construction	1%

- The boldness of the barge boards should be emphasized.
- Increasing the overhang of the eaves, in addition to increasing the pitch would distinguish the roof in a manner similar to the main house.
- Small, vertical windows are more fitting, and it would improve the design if the square windows would match them.
- Lap siding with a horizontal distinction rather than corrugated metal with a vertical distinction should be used. A belly band could be used to separate the upper and lower materials.
- A window next to the door could be used to give an appearance of balance.
- Plantings or flower beds should be used to accentuate the entrance of the cottage.

What was the cost of construction, whether a new structure or an addition or remodel of an existing structure?

This detached ADU was designed and partially constructed by the owner (an architect), saving much money. The applicant's estimated total of his own time and construction costs is $138,800.

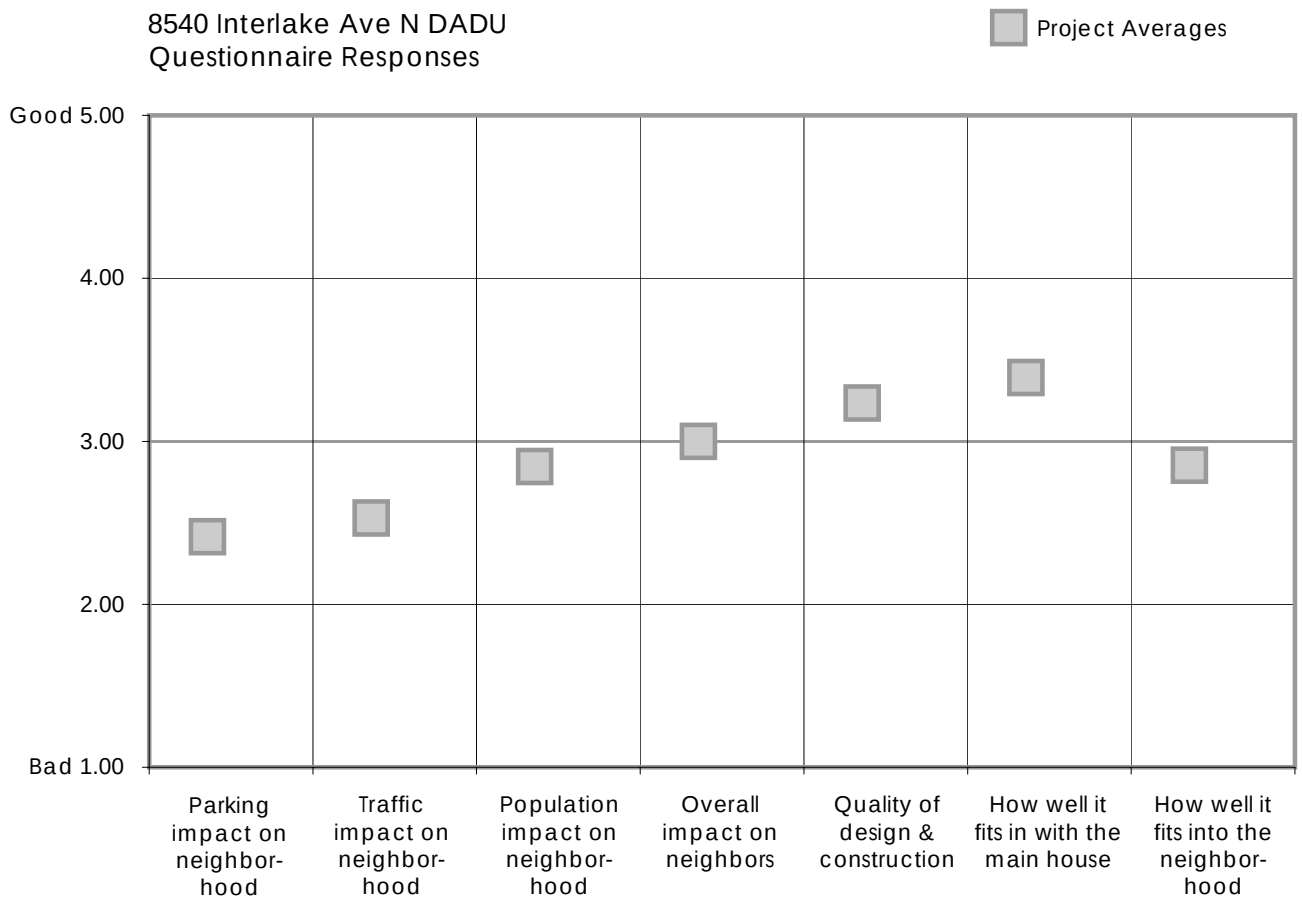

Was administrative Design Review cost effective for this type of small project?

This project's land use and design review took a total of 26 hours, and the fee for this part of the review was $1,952 (1.4% of the total cost). The building permit cost was $1,316.50, bringing the total to $3,268.50.

While this is a small percentage of total costs, in an interview, the owner pointed out that if he were not an architect, and it was necessary to hire one to administer the Design Review process, the fees alone for the architects time would be cost prohibitive. The owner also commented that the process was too onerous, mentioning that "it was an enormous hassle and at times I found it quite over the top in terms of the amount of administration, review/comment period and comments made by the DCLU reviewer."

Vegetation helps screen the detached ADU from the street.

The finished product, when compared to the original design selected among the 1998 AIA Design Demonstration Projects and the original Demonstration Program application, raises the question of when design review is appropriate, and to what extent it is appropriate when reviewing small projects such as this. It also brings to light a difficulty of the process of the Demonstration Program, and that is the transition between project selection, and Master Use Permit application. In this case, the design selected through the Program was modified significantly during the Design Review Program.

The original design was intended to be more modern, with industrial finishes, including corrugated metal siding, a roll-up door, more discrete windows, and a second-floor sleeping loft (as opposed to a full second story). The original design was also shorter. The goal of the reviewer was to try to shape the detached ADU into a cottage with Craftsman elements.

This scenario differs greatly from the Magnolia detached ADU process, which began with a plan needing design direction. This detached ADU was designed and constructed by an architect, who lives in the primary structure. This particular design review process was not successful in changing the form of the building to look more like a cottage, but did result in changing the finishes of the original form to mimic craftsman-like elements.

Many of the surrounding homes are rentals in this area adjacent to multifamily zoning.

A view of the primary structure from the street.

Neighborhood Sentiment

What do the neighbors think of this type of housing?

As this project replaced an existing detached ADU, it easily held neighborhood support through the Demonstration Program selection process.

Survey results show that neighborhood sentiment about the project is on the whole not as positive as the other detached ADU projects. The chart on page 47 shows how this project was rated in the surveys that were sent to neighbors within 300 feet of the project. At least two (excluded) questionnaire respondents that gave the project poor marks were unclear about the location—and in at least one case instead rated a new "skinny" house built on the next block over. Another person cited junky cars and poorly treated animals—clearly indicating that they weren't responding to the detached ADU project at all (none of these conditions are to be found on the project site). While parking was the lowest-rated impact, the project actually added an additional off-street parking space to the neighborhood. Further, while the general population impact was also rated below average, the actual population of the neighborhood never changed as a result of this redeveloped ADU. Nevertheless, because it is difficult to sort out which neighbors knew of the project and which didn't, all survey responses but the two mentioned are included, perhaps unfairly impacting this project's overall rating. And while the project has a higher relative percentage of "bad" impact ratings, a little over half of respondents still rated impacts as "neutral" or "good."

Others that were familiar with the project liked the housing concept in general, and were very supportive in their comments, and several marked "3" for some of the questions. Neighbors familiar with the project that did not rate it well mentioned concerns with its height, privacy, increased traffic, parking, and "turning Seattle into a shanty town." Another neighbor stated:

> "Because of the huge 6 plex condos in the neighborhood, parking is at an all time premium. There are so many multiple dwelling buildings that the density is enough."

This statement underscores the questionnaire results and comments, from which it can be surmised that in this edge area, where single family homes abut multifamily zones near Aurora Avenue, the overall impact of new development and regional growth are being felt, and the central themes are aesthetics, traffic, and parking.

A view across the backyard from stairs of the main home.

Were there any unintended consequences that need to be resolved?

The neighbor adjacent to the rear of the lot wrote:

"[The structure] has taken away my sense of privacy/ specific window placement & the design is overbearing, the effect is that of a silo on my property line - even the color it has finally been painted is a poor choice."

"Too many automobiles on this street has resulted in noise, crowding, and congestion."

"The large east window that is invasive."

"Again traffic."

In this case, the most obvious unintended consequence is the negative impact (be it a perceived sense of privacy or real) on the adjacent neighbor along the rear property line.

This could potentially be resolved through the installation of a fence, or using an opaque glass in the east window (on the back of the second story of the detached ADU), or both. The owner has since installed a fence along the rear lot line, and this has helped address the privacy concerns.

What is the reaction of the residents of the detached ADU in terms of livability of the unit and how it could be improved?

The tenant, who has resided on the site for approximately 15 years, provided ample feedback when asked about his reaction to the livability of the unit and how it could be improved:

"The resulting structure is one that I consider a veritable palace in comparison to the structure it replaced. There's no doubt that this is a very comfortable, desirable place to live. The design preserves privacy very well, while not cutting off neighborly interaction. Yard sizes around the structure remain substantial and preserve the character of a "single family" neighborhood. I think that as with any home site, any given detached ADU site can be a great success or dismal failure based upon the care of the design; not only in the footprint and height, but also the placement of doors and windows (sightlines) the placement of walkways, of open space (lawns and gardens and trees), in addition to the feeling of the inside spaces and the landscape integration of the outside profiles. I'm not sure that success could ever be reliably enforced through static regulation, in many ways it's more a matter of craft and artistic concern."

The tenant offered no specifics relating to how the unit could be improved.

The first floor of the detached ADU includes a kitchen and den with high-end finishes.

Conclusions

What were the positive results of this project? What were the negative results?

The detached ADU in the Licton Springs neighborhood is the second tallest at 19 feet to the ridge of the roof, yet has one of the smallest footprints and the lowest floor-to-lot-area ratios (0.146) of all the reviewed detached ADUs. It uses less land and maintains more open space than the other units reviewed.

The upper floor of the detached ADU features a vaulted ceiling

The design minimizes the amount of perceived bulk from the adjacent lot to the north by using a lower roof line along the side yard, while also minimizing the square footage of surface area facing the adjacent lot to the rear of the lot by using a long, skinny configuration.

The inclusion of a fence helps minimize the impact of the new detached ADU. The neighbor's vegetation helps as well.

If viewed from the south side of the adjacent yard to the rear, the south face of the detached ADU does seem large and intrusive. This has been mitigated by the installation of a fence, and landscaping could also help in this regard.

Did this project provide a design concept that would likely be applicable and acceptable in other neighborhoods?

While there is some concern over the scale and height of this detached ADU, it is still a positive example of small-scale infill housing. With some additional mitigation of impacts, it could be acceptable in other neighborhoods.

Lessons Learned

Successes and issues that this project bring up that DCLU will address with a proposal for detached ADUs in single family zones include:

- the applicability of design review to projects of this size;
- requirements for matching detached ADU scale, color, and materials to the existing home versus providing flexibility to achieve a more innovative or modern design;
- ensuring a proper maximum allowed height of detached ADUs to limit perceived bulk and scale, privacy, and shadow impacts;
- landscape requirements to limit privacy impacts for detached ADUs; and
- appropriate setbacks for detached ADUs built on parcels without alleys to limit open space and privacy impacts.

Detached ADU Project Conclusions

What are appropriate development standards for detached ADUs that "fit" on a single-family lot and within a single-family neighborhood, but still allow the development of a livable unit?

Proposed development standards are being recommended, and follow several public process steps that have been completed, including focus groups, a public forum, and on-line outreach.

The Demonstration Project detached ADUs reviewed here indicate that flexibility should be allowed for some standards, such as setbacks, but tighter controls should be used for standards like height and total floor area. Projects which departed from traditional side- and rear-yard setbacks significantly worked just as well and in some cases better than others, particularly with shorter overall heights.

Two major themes emerged in the review of these projects that will most directly feed into proposed detached ADU provisions: new dwellings that are well-designed and fit into their surroundings from both a design and size/open space point of view will be more successful. A streamlined administrative design review process and some variation of maximum allowed floor-to-lot-area ratios and heights will likely be the key to a successful proposal.

Development standards that may be appropriate for detached ADUs in single-family zones include:

- Maximum Lot Coverage
- Maximum Height
- Off-Street Parking
- Maximum Floor Area
- Maximum Floor-to-Lot-Area Ratio
- Maximum Height-to-Lot-Width Ratio
- Setbacks

Is there a minimum lot size that would be appropriate?

The smallest lot size among the Demonstration Program detached ADUs is 4,000 square feet in size (a 40- by 100-foot lot). This is a little smaller than the average lot size for typical single family lots in Seattle (4,500 - 5,000 square feet). There are many smaller lots in Seattle where a detached ADU could work.

The question is not so much whether a minimum lot size is appropriate—but more of whether:

a) there is enough available land on the lot to build a detached ADU; or

b) the height of the detached ADU is appropriate relative to the width of the lot.

These concepts can be administered through appropriate development standards such as maintaining the maximum lot coverage requirement (35%) . Tools such as a maximum floor-to-lot area ratio or a maximum height-to-lot width ratio can help ensure scale relationships that are successful.

Should additional height above that currently allowed for accessory structures be allowed, and if so, should there be a maximum limit for the additional height?

Results from the constructed detached ADUs have shown that allowing units above garages can work successfully. The tallest detached ADU in Magnolia is 24 feet, and this height works primarily due to the size and location of the lot, which is 8,400 square feet, on a corner, adjacent to an alley, and has a very wide planting strip. This project is also taller than the primary structure, but still works because its design and the space around it makes it "read" like just another home in the neighborhood.

The detached ADU above a garage in Green Lake is 22 feet tall from the alley to the top of the roof pitch, but rests on a slope and has a shorter height uphill. This project works even though the lot is narrower and smaller than the Magnolia example because its bulk and scale is appropriate for the size of lot, and because of its context—several other accessory structures, including "grandfathered" detached ADUs, line the alley.

Additional height above that currently allowed for accessory structures will be necessary to allow units above garages. A maximum height would help keep detached ADUs smaller relative to the height allowed by single family zoning. A maximum limit would help emphasize their accessory nature, and help ensure that they better fit in with their surroundings while limiting privacy impacts.

If additional height is allowed, should it be allowed outright or through the administrative Design Review procedure?

The administrative Design Review process, while proven successful through the Demonstration Program for projects of this size, has significant financial impacts for both the City as well as property owners that may wish to build detached ADUs above garages. Basic standards limiting the height, bulk, and scale of new detached ADUs will be an effective means of ensuring that new detached ADUs are a height appropriate to the size of the lot they are built on without needing to go through a lengthy and more expensive process.

Does the process through which it is approved make any difference in the amount of additional height that may be allowed?

Again, by limiting the height of detached ADUs according to the width of the lot they are built on, DCLU can ensure that new structures are appropriate to the lot and their context.

Are ADUs above garages a viable option in terms of cost to construct and fit in single-family neighborhoods?

Two of the detached ADUs evaluated are above garages, both on alleys. Their construction costs were higher than the other detached ADUs evaluated, but their design and construction were both also contracted out to third parties, while the detached ADUs not above garages were owner -designed and built.

Detached ADUs above garages are more costly. They will work better in neighborhoods with alleys and on larger, wider lots, or lots that slope downward towards the alley, because they inherently lead to a taller building height.

What do the neighbors think of this type of housing?

The majority rated the impact of detached ADUs on the positive side, using a scale of 1 to 5. The primary concerns imparted both through the Demonstration Program selection process and the surveys sent out to neighbors were privacy, parking, and traffic. Other concerns heard include general overcrowding of neighborhoods, loss of open space, and quality of design.

What is the reaction of the residents of the detached ADU in terms of livability of the unit and how it could be improved?

Only two of the detached ADUs have had tenants since their construction; both of them have been occupied by the same tenants for the duration of their existence (over two years as of this writing.) One resident interviewed gave very strong support for the livability of his dwelling, while the other was described by the owner to appreciate the separated nature of the ADU.

Was administrative Design Review cost effective for this type of small project?

In most cases, Design Review was cost effective for the applicants of detached ADU projects selected through the Demonstration Program, although not all agreed.

As to whether administrative Design Review would be cost-effective for the City, a balance clearly must be struck between the fee that is charged, the time spent reviewing projects, and the development standards that can be departed from in a potential design review program for detached ADUs.

As stated above, certain concepts are more appropriate for flexible review than others. An administrative design review process would allow a discretionary review over certain elements of a new detached ADU, and would mean that these elements are neither optional nor that strict control of how the elements are used would be maintained by a reviewer.

Ultimately the balance of the benefits of administrative design review and the costs to the applicant must be weighed against a more detailed financial analysis.

If Design Review is to be used for this type of development, are additional design guidelines needed to address more directly the issues relevant to detached ADUs?

Yes. Design guidelines specific to detached ADUs that help shape their character would be necessary for an administrative Design Review program. They may also assist with other types of discretionary review. Design guidelines covering the following may be suitable:

- Setbacks
- Roof Pitch
- Materials, Colors, and Finishes Complementary to the Primary Structure
- Window Size and Placement
- Landscaping and Screening

Are there certain neighborhoods or types of neighborhoods that are more appropriate for this type of housing than others?

No. Althought only four Demonstration Program detached ADUs have been constructed, the can be found across a variety of neighborhood types. All were found to be successful to varying degrees. An interesting note is that detached ADUs in more traditionally single family neighborhoods were better accepted than the one in an area with more of a rental and multifamily mix.

Different types of neighborhood will result in different types of detached ADUs. Where single family homes are larger and more expensive, more investment will liekly be made to ensure that a new detached ADUs complements and enhances existing investments. In neighborhoods with smaller, less expensive homes, smaller detached ADUs will be less expensive to construct, and the appropriate application of development standards and design guidelines can ensure that they complement the existing home and the neighborhood without being overburdensome.

While detached ADUs can be applied across different types of neighborhoods, there are certain types of lots that are more appropriate than others for detached ADUs. Larger lots, corner lots, and lots on alleys allow more physical space between detached ADUs and neighboring residences, and are places where new dwellings should be encouraged. Other, smaller lots have also been shown to work, as long as the size and height of the detached ADU is appropriate and it is designed well.

Demonstration Program Detached ADU Comparison Chart

	Magnolia	North Capitol Hill	Green Lake	Licton Springs
Lot Size	8,400 ft^2	4,000 ft^2	5,000 ft^2	5,125 ft^2
Lot Width	70 ft	40 ft	40 ft	50 ft
Lot Depth	120 ft	100 ft	125 ft	102.5 ft
Alley Width	28.5 ft	N/A	15 ft	N/A
Primary Structure Height	17.5 ft	27 ft	23 ft	21 ft
Detached ADU Pitch Height	24 ft	16 ft	22 ft	19 ft
Detached ADU Height/Lot Width Ratio	0.34	0.400	0.55	0.38
Detached ADU Base Height	11 ft	14 ft	17 ft	14 ft
Main Structure Footprint	2,353 ft^2	935 ft^2	1,294 ft^2	1,012 ft^2
Detached ADU Footprint	936 ft^2	466 ft^2	836 ft^2	374 ft^2
Total Lot Coverage	37%	35%	40%	27%
Detached ADU Approximate Gross Floor Area	1,872 ft^2 (includes garage)	728 ft^2	1,336 ft^2 (includes garages)	748 ft^2
Detached ADU FAR (approx.)	0.21	0.18	0.26	0.15
Detached ADU Minimum Side Yard Setback	9 ft to street	<1 ft	1 ft	4 ft
Detached ADU Minimum Rear Yard Setback	4 ft to alley	~1 ft	5 ft to alley	5 ft
Estimated Cost of Construction	$200,000	$95,000	$152,484.70	$138,800
Approx. Cost per ft^2 Floor Area	$107/$ft^2$	$130/$ft^2$	$114/$ft^2$	$186/$ft^2$
Land Use Permit Fees (includes Design Review)	$3,593	$1,470.50	$3,394.50	$1,952
Land Use Permit Fee/Est. Cost of Construction	1.8%	1.5%	2.2%	1.4%
Building Permit Fees	$2,053.50	$998	$1,417.50	$1,316.50
Building Permit Fees/Est. Cost of Construction	1%	1%	1%	1%

Cottage Project Evaluation

The Demonstration Program was revised in 1999 to allow cottage housing with carriage units (Ordinance # 119368). Through this and subsequent enabling ordinances, three cottage projects, two with carriage units, were selected.

As of April, 2003, there is one constructed cottage project to evaluate:

- 6 Cottages with 3 Carriage units at 6318 5th Ave NE

Two are in the permitting process:

- Six cottages with two carriage units at 4858 Beach Drive SW
- Four cottages at 1521-1523 E Jefferson St

Cottage Project Questions

As with detached ADUs, the Ordinance initiating the Demonstration Program posed project-specific questions to be answered after the proposal's completion. The questions were addressed through a combination of neighbor surveys form comments, owner/applicant interviews, urban design analysis, project review staff interviews, and review of permit files.

Project-specific questions from the ordinance include:

- What was the cost of construction?
- How did the additional density affect the per unit cost of construction?
- Does the additional density result in more affordable units?
- What do the neighbors think of this type of housing?
- Is the number of units an issue with neighbors?
- What is the reaction of the residents of the housing in terms of livability of the unit and how it could be improved?
- Did this project provide a design concept that would likely be applicable and acceptable in other neighborhoods?
- What were the positive results of this project? What were the negative results?
- Were there any unintended consequences that need to be resolved?

Further questions related to the housing type overall were also posed; these questions are answered in the Cottage Housing Conclusions section:

- Do the development standards that are already in the code work for this type of development? Should some standards be modified and if so, how?
- What development standards, including height, are appropriate for accessory structures?
- Should some standards be modified and if so, how?
- If Design Review is to be used for this type of development, are additional design guidelines needed to address more directly the issues relevant to this type of single family development?

The majority of neighbors rated the impact of the Ravenna Cottages positively. It is the only cottage development yet constructed through the Demonstration Program.

A carriage unit kitcthen.

The living room of one of the cottages.

Ravenna Cottages

Site Address: 6318 5th Ave NE

Zoning: Single Family 5000

Neighborhood Impact Survey Results

28%	27%	45%
Bad	Neutral	Good

Project Overview

The Ravenna Cottages project in the Green Lake neighborhood demonstrates the Demonstration Program's Cottage "Type B" category—cottages with carriage units. Carriage units are essentially small cottages above garages, and in the case of Ravenna Cottages, the carriages share common walls. Carriage units were allowed at a ratio of one per every two cottages.

Six cottages line two sides of a courtyard that is fenced and gated from the street At the back of the courtyard sits three carriage units accessible by an exterior stairway. Below the carriage units, nine garages line the alley.

The Ravenna Cottages used details to their fullest advantage, including trellises and Craftsman-style finishes, trim and window details reminiscent of other homes in the neighborhood. A palette of compatible colors was used to identify each cottage.

Process Evaluation

Application Excerpt

"Currently very few, if any, two bedroom houses are being developed in Seattle. This project will provide diversity as well as the most affordable product in the neighborhood."

Ravenna Cottages includes porches along the streetfront.

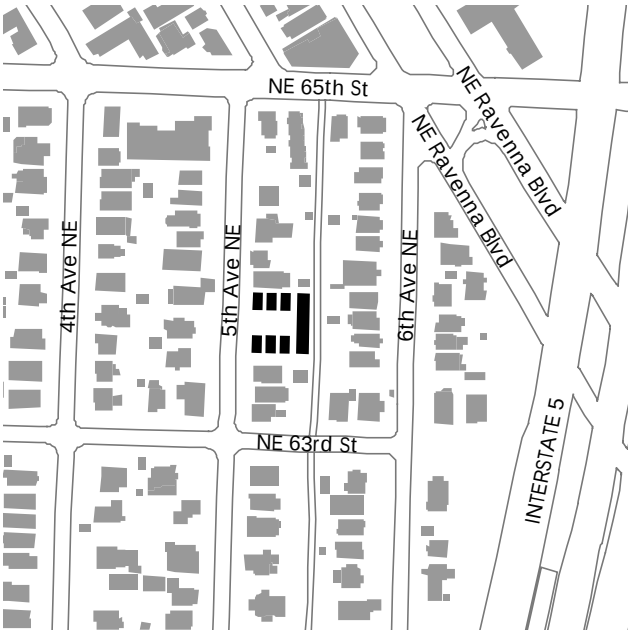

Demonstration Program Selection

This project was selected as a "should be built" in the 1999 AIA Design Demonstration Project competition. DCLU received only one letter of opposition during the comment period required for the Demonstration Program, and the applicant included signatures from several people that were supportive of the project in their original Demonstration Program application.

Development Standard Departures

This project went through the full Design Review Board process. Through this process, the following design departures were allowed:

The density of cottages allowed by the Land Use Code is one dwelling unit per one thousand six hundred (1,600) square feet of lot area. The Demonstration Program allowed up to 50% more density (one unit per 1,067 ft^2) if carriage units above garages are provided. The project proposes nine dwelling units on 10,500 ft^2 of lot area, or one unit per 1,167 ft^2.

The project was granted a departure for lot coverage of 45.5%, or 580 square feet over the allowed coverage. The maximum lot coverage is typically forty percent (40%) for cottages. This departure allows on-site, secure garages for nine units. For vehicle security and aesthetics, garages are preferable to open parking or car ports.

The second story of any cottage is limited to fifty percent of the floor area of the ground floor. The project was granted a departure to allow floors one and two to be comparable in area (approximately 460 ft^2). This allows a more functional and livable home with two bedrooms and 1.5 bathrooms.

The project was also granted a departure from code requirments to provide open space dimensions smaller than the minimum required. Cottage Housing Development typi-

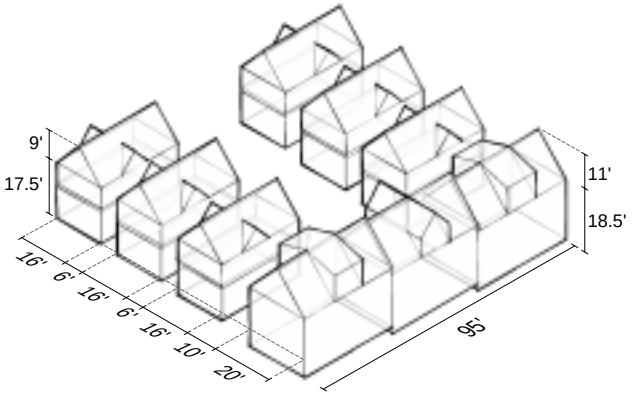

This drawing illustrates the dimensions of Ravenna Cottages.

Relationship of the cottages to the general bulk, scale, and location of nearby structures.

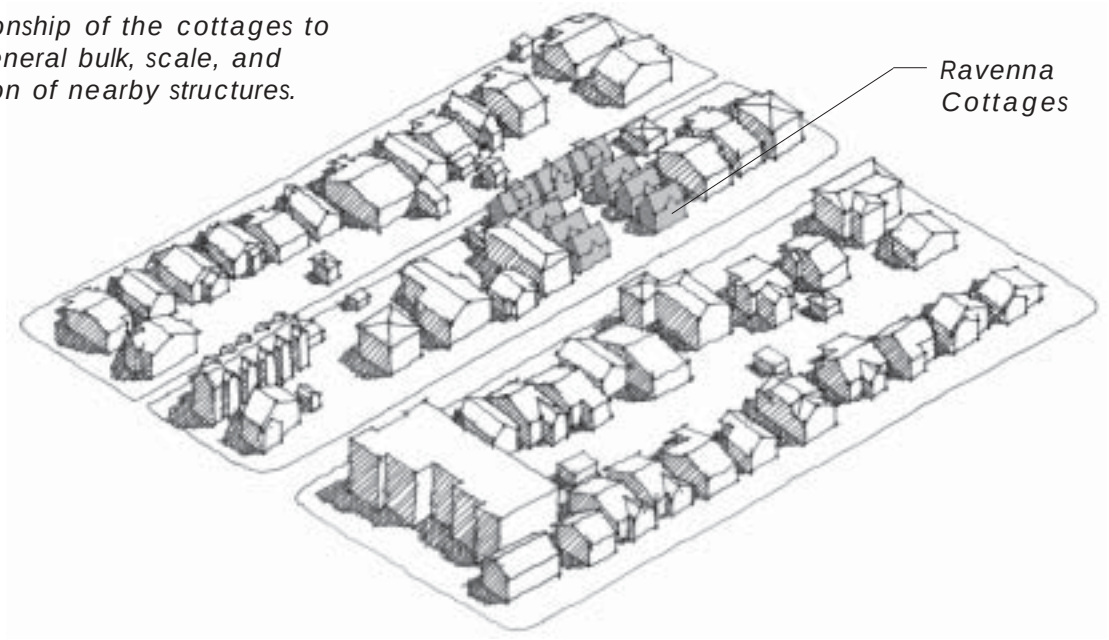

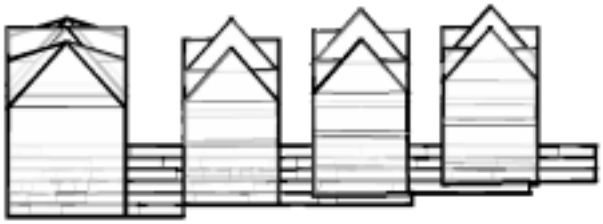

North Elevation

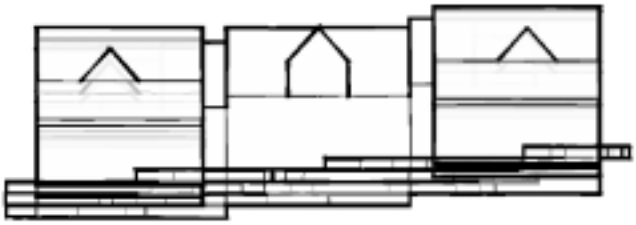

West Elevation

cally requires 400 sq. ft. of landscaped open space per unit, a minimum of 200 ft^2 usable, private open space, and a minimum of 150 ft^2 of common open space.

This is an intimately-scaled cottage development that provides a variety of community spaces. The scale of individual decks provided resembles balconies to reserve site area for central, shared spaces. Open space is concentrated in a highly landscaped courtyard of 1,624 square feet and a landscaped front yard (352 ft^2) for a total of 1,976 square feet. These areas have seating, arbors, and a water feature.

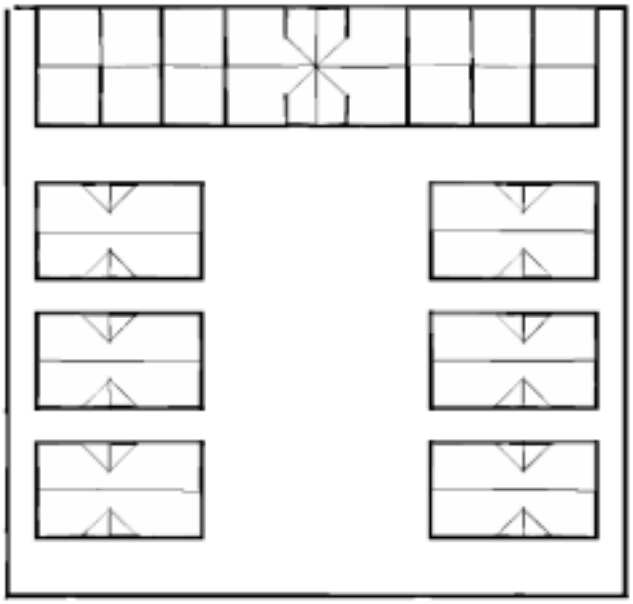

Plan View

Application of Design Guidelines

In the review of Ravenna Cottages, the Design Review Board provided design guidance to help the project meet the intent of the Citywide Design Guidelines.

In general, the Design Review Board was pleased with the conceptual design and siting of the detached units as they relate to the site and adjacent properties. The Design Guidelines, along with Board guidance given to the applicant during this process, resulted in the following:

- Rooflines were revised and three modulations of height stepping down to the north were made to reduce the appearance of height of the garage/carriage house structure.
- The color of each carriage house was varied to create visual modulation in the facades.
- Evergreen and deciduous flowering vines were planted along the alley to create softness and shadow patterns on the walls and garage doors on the lower half of the carriage homes to aid in blending into the neighborhood.
- Siding materials were selected to create a softer edge and more visual variety against the alley.
- The condominium declarations were required to state that the garages could not be used for non-automobile storage, and storage areas were added in a basement structure located under the two northeast cottages to address public

concern regarding the garages' potential use for storage, and subsequent spillover of project-related parking onto 5th Avenue NE.

- The architect's design intent drew from existing single family architecture in the vicinity, and from the broader scope of domestic housing styles. Detailing that is present in the existing houses in the neighborhood was used.
- Craftsman-style features and details were used. The cottages have bellybands and varied siding and trim to create interest and visually reduce the height. Roof surfaces are broken with dormers to add visual interest and to enhance the interior spaces.
- The cottages and carriage homes were designed to share the same materials and detailing and surround an integral landscaped courtyard that provides a central focal point for the cottage development.
- Landscaped courtyard and vine-covered trellises were used to achieve a sense of human scale.
- The courtyard was divided into three distinct areas to create intimate environments.

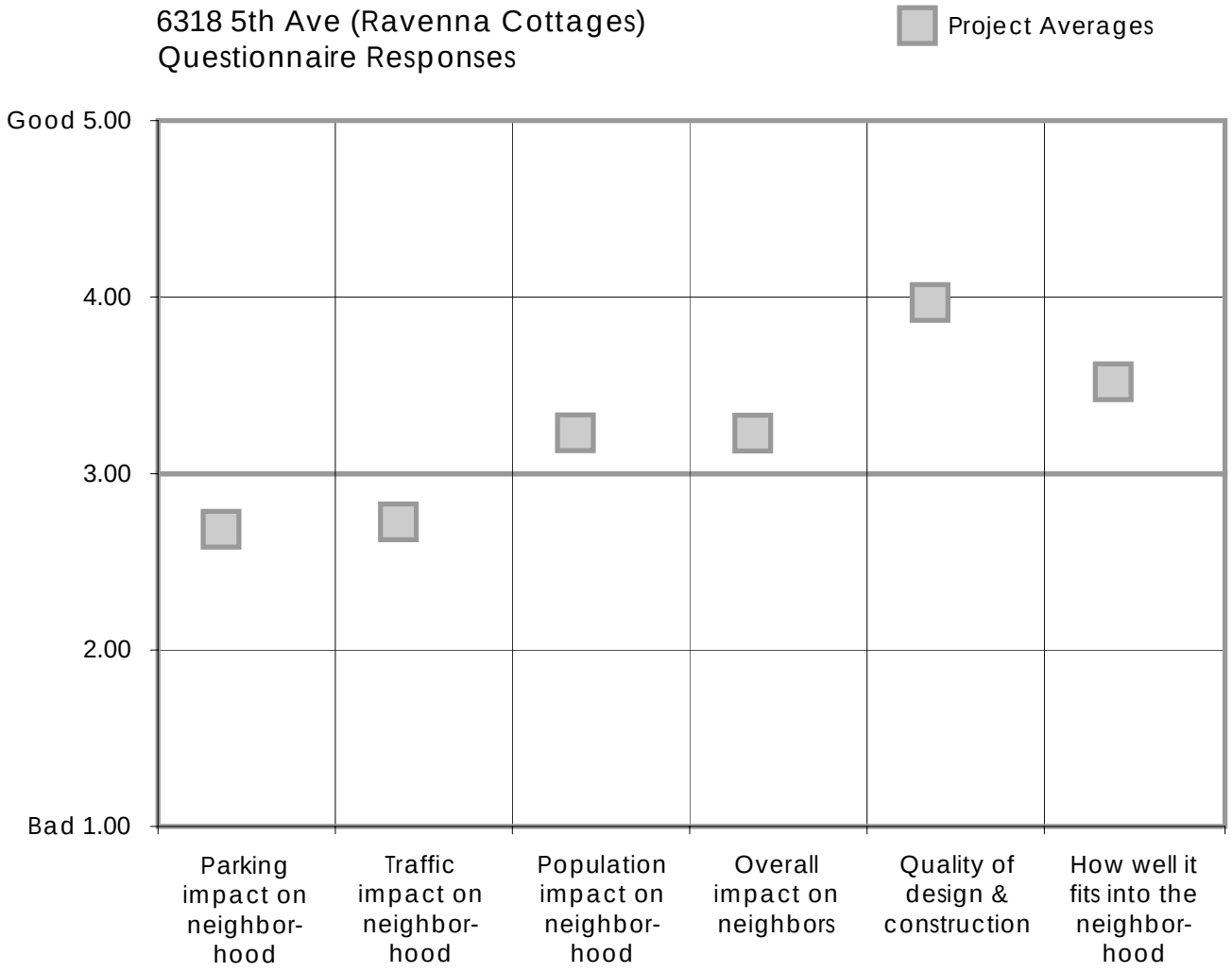

- Landscaping was provided on all sides of the carriage house structure, as well as low level path-style lighting and vehicle lighting to make the area around the proposed carriage house more pedestrian oriented.
- Vines and other landscape materials were placed on the property line side of the south entry path, and a vine-covered trellis over the north access path between the carriage and cottage homes to provide an interesting, intimate entry from the alley.

The cottages surround a common courtyard with trellises.

- A space was provided outside each cottage side door for recycling baskets in a screened utility area accessible to a rear path. For the carriage units, a lattice-screened and secured storage area under the entry stairs was provided for recycling.
- A large basement area under the two northeast cottages was also set aside for garbage and recycling.
- The fence and landscaping on 5th Avenue was designed to reinforce the character of the neighboring properties, and to create an appropriate transition from the public to private realm.
- The common open space was designed to include:
  - An arbor with mailboxes and a covered bench with plantings.
  - A low, picket-style fence encloses the site to provide an open welcoming view into the central courtyard.
  - A special planting and garden feature (birdbath, obelisk or sundial) to create a visual focal point from the sidewalk. This feature also screens the residents' sitting and entertaining areas.
- A large trellis is sited at the rear of the cottages for vines to cover most of the first floor cottage elevation.

Neighborhood Sentiment

What do the neighbors think of this type of housing? Is the number of units an issue with neighbors?

The chart on the previous page shows how this project was rated in the surveys that were sent to neighbors within 300 feet of the project. Comments from the surveys included:

"I heard concerns, at first and before construction, about parking. I live two doors from the development and as yet, have found no concerns with parking."

"Despite the 9 garages built for each unit, they are not being used by most of their owners for parking...other than the serious parking/traffic problem...it is well designed & very pleasing visually."

"This type of housing is excellent."

"Visually very dense looking."

Overall, the majority of survey responses were positive, indicating most neighbors think the project has had a good or neutral impact. On the whole it can be said that neighbors think

well of the project, although some people took issue with the total number of units and the general parking situation in the neighborhood. Because the project was so well designed, it has fewer detractors than it might have otherwise had.

What is the reaction of the residents of the housing in terms of livability of the unit and how it could be improved?

A resident of one of the cottage units wrote:

> I have to say living there has been a pleasure. Specifically, the layout is excellent. While there is not much space to work with on the lot, John and his team did a great job of making the common areas feel very open and comfortable, but also neighborly and homey.
>
> The cottage itself is also extremely well thought-out. While small, they are particularly well-designed to make good use of the space. Parking under the carriage houses was an excellent idea, as was using the carriage houses to block freeway noise.
>
> Finally, in regard to the impact on the neighborhood, I feel this was a great addition to the community. As populations swell and real estate becomes more sparse, I believe we will need to find creative ways to increase our supply of housing without cramping the urban lifestyle. In my opinion, the Ravenna cottages succeed in this regard and are a great model for future developments.

Conclusions

What was the cost of construction?

Approximately $1.6 million.

How did the additional density affect the per unit cost of construction?

The three additional carriage units decreased the per unit costs, perhaps due in part to their lower per square foot cost of construction versus the cottages.

According to the developer, the dollar per square foot construction costs for the cottages reduced from $236 to $210 as a result of adding the carriage units. The average construction cost per unit also dropped about 11% when the carriages were included.

Does the additional density result in more affordable units?

Because the carriage units had a lower per square footage cost of construction and sold for a lesser per square foot price, they did result in more affordable units than only six cottages likely would have.

What were the positive results of this project? What were the negative results?

Overall, the Ravenna Cottages project is a success, given how the neighborhood sentiment about it has evolved since the idea's inception. Aside from the parking and traffic issues cited above, the size of the project, specifically along the alley side where the carriage units are located, may have influenced some survey respondents who feel that the development is too dense.

Ravenna Cottages uses a subtle variety of complementary colors to help minimize its visual impact.

Did this project provide a design concept that would likely be applicable and acceptable in other neighborhoods?

The cottages themselves tend to fit in well with their surroundings, particularly in terms of scale (building height and widths) and with complementary roof pitches. The street-facing facades are somewhat sparse, due to the repetition in cottage design , but fortunately trellises are present to soften them. More or larger windows and modulating colors or materials along the street could have helped. Further, while the upper story bulk of the individual cottages tends to make them read more as detached townhouses and less like the stereotypical "cottage" design, the overall design works due to clever trim positioning and the placement of trellises and plantings. The varying complementary colors of the cottages also limit their visual impact.

The cottage designs could be acceptable in a broad segment of Seattle's neighborhoods. The addition of carriage units may be less acceptable.

Lessons Learned

Successes and issues raised by this project include:

- requirements or guidelines for complementing scale and materials of cottages to the adjacent homes;
- limits on the upper-story floor area, height, and scale of cottages;
- landscape requirements for cottages; and
- whether carriage units should be allowed in addition to cottages.

DCLU will address these in a future proposal for cottage housing.

Landscaping and open space are key components of the success of Ravenna Cottages.

Cottage Housing Conclusions

Do the development standards that are already in the code work for this type of development? Should some standards be modified and if so, how?

Proposed development standards are being recommended, and follow several public process steps that have been completed, including focus groups, a public forum, and on-line outreach.

The existing requirements for Residential Small Lot and Cottage Housing Developments (SMC 23.43.012) successfully provide the basic development standards for this housing type, with only minor changes necessary. Density limits, minimum/maximum lot area, lot coverage, yard and height limit requirements prescribe a collective building envelope and site plan that should be compatible in scale and function with a surrounding single family area.

In looking at other built cottage developments in the region, open space and landscaping play a significant role in shaping successful projects by helping to define character and scale. Built projects demonstrate the value porches add to cottage developments, both those that face the street and those that front shared courtyard space. Allowing porches with a minimum depth of six feet to be counted toward private open space requirements is recommended. A small per-unit decrease in the amount of total open space is being examined in the context of landscaping and overall quality and usability of such spaces.

Existing height provisions for cottages work well. The height allowed under existing standards allows 10 feet above the maximum 18 foot limit for 6:12 pitched roofs. This type of gabled roof results in a form that is complementary to traditional domestic architecture.

Design review for cottage housing is recommended to help address basic design principles to improve future cottage developments. Innovation and variety in design should be supported through the Design Review process—particularly in an area where a dominant or compelling architectural context does not currently exist. It is recognized that "by the book" standards are not appropriate for every site, and that there are many more ways of achieving design excellence than can possibly be anticipated in development standards. Design Review allows for this, while helping to ensure scale compatibility with the surrounding area.

What development standards, including height, are appropriate for accessory structures? Should some standards be modified and if so, how?

Generally cottage development places a greater number of structures on a site than would otherwise be allowed in single family zones, however, the actual lot coverage is comparable to what is allowed for standard single family development. Existing cottage standards restrict accessory uses and structures (e.g., subjecting garages to yard and setback requirements and limiting them to 12 feet in height), and provide a good template for the cottage housing proposal. In the cottage housing proposal, however, allowing the garage in the rear yard can be explored. Through Design Review, potential impacts of accessory structures in rear yards can be addressed with design solutions such as modulation, landscaping and screening, and other site-specific solutions.

If Design Review is to be used for this type of development, are additional design guidelines needed to address more directly the issues relevant to this type of single family development?

Some additional design guidance focusing on open space, including the roles of both private and semi-public open spaces in making successful developments, would be helpful. But of greater importance is to provide those administering design review with as much information and training as possible on the housing type (such as successful examples).

Process Conclusions

These conclusions highlight strengths and weaknesses of the Demonstration Program for Innovative Housing Design to be kept in mind for future potential programs.

Selection Process Analysis

In the Demonstration Program for Innovative Housing Design application materials, DCLU strongly suggested to applicants that they discuss their proposals with as many neighbors as possible. It was evident when this did and did not happen, and applicants that took the time to do so were more often selected.

This attached addition to a single family home in Ballard was built after the project was turned down from the Demonstration Program as a detached ADU for lack of neighborhood support.

The most difficult to apply of all the selection criteria was "neighborhood support." The selection committee rated each project overall, looking at all levels of how well a project met all the criteria. But if a project was particularly contentious, often neighbors and applicants seemed to be under the impression that selection was based on a popularity contest, which spawned opposition groups that would go door-to-door in neighborhoods to garner signatures opposing projects. Applicants were forced to follow suit.

At least one detached ADU applicant that was not selected for the Demonstration Program because of overwhelming neighborhood opposition has moved forward with the construction of an addition to her home, which is allowed by existing zoning.

The requirement of having a letter of support from a neighborhood organization has also been difficult. In some cases this requirement led to disagreements between neighbors and leaders of organizations who would sign letters of support for Demonstration Projects. Some organizations also later wrote letters rescinding their support, perhaps due to second thoughts raised by unhappy neighbors. Creating this sort of neighborhood turbulence was not an intended effect of the Demonstration Program.

Design Review Process Analysis

On the whole, the Design Review process was very successful in the review and shaping of selected Demonstration Projects. While most detached ADU applicants felt that the Administrative Design Review process was too onerous, relative to other review processes it was not found to be financially burdensome to constructed projects. Several other selected detached ADU applicants, however, either withdrew their applications or have not gone

forward with their proposals for either personal financial reasons or because they felt the Demonstration Program review process was too lengthy and expensive.

After a project was selected through the Demonstration Program, it would enter the Early Design Guidance process. This transition was at times frustrating to both clients and review staff. Due to the nature of the Demonstration Program, projects needed to be designed well beyond this early stage of Design Review to have a complete application, particularly one that would compete well for selection.

Selections such as the Magnolia detached ADU that competed well because of neighborhood support, but needed a greater level of design guidance than other projects, particularly benefited from the Administrative Design Review process. Also, the higher-impact Ravenna Cottages also benefitted greatly from the Design Review process before the board. With the right development standards, staff training, and informal design guidelines, detached ADUs could be effectively administered without Design Review. Due to their more comprehensive change to a site, the Design Review process should be used to better help cottages fit into their surroundings.

What do the Neighbors Think of Demonstration Projects?

At the project level, the results found in the neighborhood surveys was overwhelmingly positive. But on average, neighbors tended to rate impacts of individual projects a little better than they rated the potential impact of the housing types in general.

Comparing results between the individual project and general housing type categories

Detached ADU Impact Survey Results

Sum of Projects	*21%*	*23%*	*56%*
	Bad	*Neutral*	*Good*
Housing Type in General	*32%*	*24%*	*44%*
	Bad	*Neutral*	*Good*

illustrates much diversity of opinion. All respondents that marked all 1's on their survey forms for the individual project also marked all 1's for the housing type in general, showing that their opinion about the individual project is driven by their dislike of the concept of the housing type, be it cottage or detached ADU. Conversely, several respondents among the detached ADU and cottage neighbors marked all 1's for impacts of the housing type in general, but marked higher scores for the particular project, thereby acknowledging the limited impact of the project. Still, on the whole, respondents that primarily gave negative impact responses for the demonstration projects were in the minority.

Cottage Impact Survey Results

Ravenna Cottages	*28%*	*27%*	*45%*
	Bad	*Neutral*	*Good*
Housing Type in General	*34%*	*26%*	*40%*
	Bad	*Neutral*	*Good*

Interpretation of Survey Results

The findings listed below are brief summaries of all surveys received:

- The impacts of all projects were rated neutral or positive significantly more than negative.
- Respondents generally expressed support for the idea of smaller infill housing.

- Many have concerns about traffic and parking.
- People who opposed more housing almost always cited traffic and parking impacts as their primary concern.
- People whose comments indicated complete opposition to all new housing tended to mark all 1's on the forms.

Meeting the Goals of the Program

As mentioned earlier in the document, the goals of the Demonstration Program were to test new or more flexible regulations and processes in an effort:

- To encourage housing production, particularly types of housing that are not readily available in Seattle, or are not currently being produced.
- To stimulate innovative housing design that is consistent with the housing goals of a neighborhood, and that fits in with or improves the character of the neighborhood.
- To encourage the development of housing that will serve as a catalyst to stimulate housing production, particularly in neighborhoods where new or rehabilitated residential development has been limited.
- To serve as a model for other neighborhoods, demonstrating housing solutions that could have broader application in other neighborhoods.
- To increase the diversity of housing types and levels of affordability to meet the varied needs and goals of a neighborhood.

These end goals were primarily considered by the Demonstration Program Selection Committee and DCLU when evaluating initial Demonstration Program applications. Overall, the Demonstration Program has been successful in meeting the goal of testing new or more flexible regulations and processes.

The cottage and detached ADU projects evaluated are all types that can be found in Seattle, but are not currently allowed in Single Family zones. Each evaluated project was found to be successful in a variety of ways, including how well they fit into their surroundings, their overall design and construction qualities, and how well received they were by their neighbors.

The Ravenna Cottages showed that existing standards in the Land Use Code for cottages provide the basic development standards for this housing type, with only minor changes necessary. Evaluating the process and final product also led to the conclusion that Design Review is an important component of allowing cottage housing. It was also concluded that it would be helpful to have additional design guidelines that address open space.

The evaluated Detached ADUs have set the stage for new development standards. Review of the final detached ADU products and the process by which they were allowed indicates that they can work in different types of neighborhoods, and that there are certain types of lots that are more appropriate than others for detached ADUs. Development standards can be written to encourage detached ADUs on larger lots, corner lots, and lots on alleys where more physical space is available. The evaluation also showed that smaller lots can work, as long as the size of the detached ADU is appropriate and it is designed well.

With the proper development standards and processes, cottages and detached ADUs will help Seattle meet the goals set forth by the Demonstration Program.