ORDINANCE 122935

AN ORDINANCE related to land use and zoning, amending Seattle Municipal Code Chapters 23.47A, 23.54, 23.84A, and 23.86, as well as Sections 23.41.012, 23.66.140, 23.74.010 and 23.50.012, to update and clarify use provisions and development standards, provide new height limit exceptions, revise landscaping requirements including the Green Factor, clarify and update parking requirements, and correct technical errors.

BE IT ORDAINED BY THE CITY OF SEATTLE AS FOLLOWS:

Section 1. Subsection B of Section 23.41.012 of the Seattle Municipal Code, which section was last amended by Ordinance 122311, is amended as follows:

23.41.012 Development standard departures((~~.~~))

* * *

B. Departures may be granted from any Land Use Code standard or requirement, except for the following:

1. Procedures;

2. Permitted, prohibited or conditional use provisions, except that departures may be granted from development standards for required ((~~Downtown~~)) street-level uses;

3. Residential density limits;

4. In Downtown zones, provisions for exceeding the base FAR or achieving bonus development as provided in Chapter 23.49;

5. In Downtown zones, the minimum size for Planned Community Developments as provided in Section 23.49.036;

6. In Downtown zones, the average floor area limit for stories in residential use in Chart 23.49.058.D.1;

LH COUNCIL CLERK

7. In Downtown zones, the provisions for combined lot developments as provided in Section 23.49.041;

8. In Downtown Mixed Commercial zones, tower spacing requirements as provided in 23.49.058.E;

9. Downtown view corridor requirements, provided that departures may be granted to allow open railings on upper level roof decks or rooftop open space to project into the required view corridor, provided such railings are determined to have a minimal impact on views and meet the requirements of the Building Code;

10. Floor Area Ratios;

11. Maximum size of use;

12. Structure height, except that:

a. Within the Roosevelt Commercial Core building height departures up to an additional ((~~three (3)~~)) 3 feet may be granted for properties zoned NC3-65((~~!~~)), (Exhibit 23.41.012.A, Roosevelt Commercial Core);

b. Within the Ballard Municipal Center Master Plan area building height departures may be granted for properties zoned NC3-65((~~!~~)), (Exhibit B for 23.41.012((~~B~~)), Ballard Municipal Center Master Plan Area). The additional height may not exceed ((~~nine (9)~~)) 9 feet, and may be granted only for townhouses that front a mid-block pedestrian connection or a park identified in the Ballard Municipal Center Master Plan;

c. In Downtown zones building height departures may be granted for minor communication utilities as set forth in Section 23.57.013.B;

LH COUNCIL CLERK

13. Quantity of parking required, minimum and maximum parking limits ((~~in Downtown zones~~)), and minimum and maximum number of drive-in lanes, except that within the Ballard Municipal Center Master Plan area required parking for ground level retail uses that abut established mid-block pedestrian connections through private property as identified in the "Ballard Municipal Center Master Plan Design Guidelines, 2000," may be reduced, but shall not be less than the required parking for Pedestrian-designated areas shown in Chart D for Section 23.54.015 ((~~Chart D~~));

14. Provisions of the Shoreline District, Chapter 23.60;

15. Standards for storage of solid-waste containers;

16. The quantity of open space required for major office projects in Downtown zones as provided in Section 23.49.016.B;

17. Noise and odor standards;

18. Standards for the location of access to parking in Downtown zones;

19. Provisions of Chapter 23.52, Transportation Concurrency Project Review System;

20. Provisions of Chapter 23.53, Requirements for Streets, Alleys and Easements, except that departures may be granted from the access easement standards in Section 23.53.025 and the provisions for structural building overhangs in Section 23.53.035;

21. Definitions; and

22. Measurements.

* * *

LH COUNCIL CLERK

Section 2. Subsection G and Chart A of Section 23.47A.004 of the Seattle Municipal Code, which section was adopted by Ordinance 122411, is amended as follows:

23.47A.004 Permitted and prohibited uses((.))

* * *

G. Live-work ((~~U~~))units.

1. In all NC zones and C zones, live-work units are permitted outright subject to the provisions of this title.

2. In pedestrian-designated zones, live-work units shall not occupy more than 20((~~%~~)) percent of the street-level street-facing facade along designated principal pedestrian streets listed in subsection 23.47A.005.D.

3. In the Lake City and Bitter Lake Village Hub Urban Villages, live-work units shall not occupy more than 20((~~%~~)) percent of the street-level street-facing facade.

4. Except where expressly treated as a residential use, live-work units shall be deemed a nonresidential use.

* * *

Chart A for ((~~Section~~)) 23.47A.004 Uses in Commercial Zones						
		PERMITTED AND PROHIBITED USES BY ZONE (1)				
	USES	**NC1**	**NC2**	**NC3**	**C1**	**C2**
***						
L.	TRANSPORTATION FACILITIES					
L.1.	Cargo terminals	X	X	X	S	P
L.2.	Parking and moorage					

LH COUNCIL CLERK

Chart A for ((~~Section~~)) 23.47A.004 Uses in Commercial Zones						
		PERMITTED AND PROHIBITED USES BY ZONE (1)				
	USES	NC1	NC2	NC3	C1	C2
L.2.a.	Boat moorage	S	S	S	S	S
L.2.b.	Dry boat storage	X	25	P	P	P
L.2.c.	Parking, principal use, except as listed below (12)	X	25	P	P	P
L.2.c.i.	Park and Pool Lots (12)	P((~~(12)~~)) (13)	P	P	P	P
L.2.c.ii.	Park and Ride Lots (12)	X	X	CU	CU	CU
L.2.d.	Towing services	X	X	X	P	P
L.3.	Passenger terminals	X	X	25	P	P
L.4.	Rail Transit Facilities	P	P	P	P	P
L.5.	Transportation facilities, air					
L.5.a.	Airports (land-based)	X	X	X	X	X
L.5.b.	Airports (water-based)	X	X	X	X	S
L.5.c.	Heliports	X	X	X	X	X
L.5.d.	Helistops	X	X	CCU	CCU	CU
L.6.	Vehicle storage and maintenance					
L.6.a.	Bus bases	X	X	X	CCU	CCU
L.6.b.	Railroad switchyards	X	X	X	X	X
L.6.c.	Railroad switchyards with a mechanized hump	X	X	X	X	X
L.6.d.	Transportation services, personal	X	X	P	P	P
M.	UTILITY USES					
M.1.	Communication Utilities, major ((~~(13)~~))(14)	X	X	X	CCU	CCU
M.2.	Communication Utilities, minor ((~~(13)~~))(14)	P	P	P	P	P
M.3.	Power Plants	X	X	X	X	X
M.4.	Recycling	X	X	X	P	P
M.5.	Sewage Treatment Plants	X	X	X	X	X
M.6.	Solid waste management	X	X	X	X	X

LH COUNCIL CLERK

Chart A for ((~~Section~~)) 23.47A.004
Uses in Commercial Zones

		PERMITTED AND PROHIBITED USES BY ZONE (1)				
	USES	**NC1**	**NC2**	**NC3**	**C1**	**C2**
M.7.	Utility Services Uses	10	25	P	P	P

KEY

A = Permitted as an accessory use only

CU = Administrative Conditional Use (business establishment limited to the multiple of 1,000 sq. ft. of any number following a hyphen, ((~~according to~~)) pursuant to Section 23.47A.010)

CCU = Council Conditional Use (business establishment limited to the multiple of 1,000 sq. ft. of any number following a hyphen, ((~~according to~~)) pursuant to Section 23.47A.010)

P = Permitted

S = Permitted in shoreline areas only

X = Prohibited

10 = Permitted, business establishments limited to 10,000 sq. ft., ((~~according to~~)) pursuant to Section 23.47A.010

20 = Permitted, business establishments limited to 20,000 sq. ft., ((~~according to~~)) pursuant to Section 23.47A.010

25 = Permitted, business establishments limited to 25,000 sq. ft., ((~~according to~~)) pursuant to Section 23.47A.010

35 = Permitted, business establishments limited to 35,000 sq. ft., ((~~according to~~)) pursuant to Section 23.47A.010

40 = Permitted, business establishments limited to 40,000 sq. ft., pursuant to Section 23.47A.010

50 = Permitted, business establishments limited to 50,000 sq. ft., ((~~according to~~)) pursuant to Section 23.47A.010

***

(1) In pedestrian-designated zones, a portion of the street-level street-facing facade of a structure along a designated principal pedestrian street may be limited to certain uses as provided in section 23.47A.005.D((~~E~~)). In pedestrian-designated zones, drive-in lanes are prohibited (Section 23.47A.028).

***

(9) Residential uses may be limited to 20((~~%~~)) percent of a street-level street-facing facade ((~~according to~~)) pursuant to subsection 23.47A.005.C((~~D~~)).

***

(12) In pedestrian-designated zones, surface parking is prohibited adjacent to principal pedestrian streets pursuant to Section 23.47A.032.B.2.

(13) Permitted only on parking lots existing at least 5 years prior to the establishment of the park and pool lot.

((~~(13)~~))(14) See Chapter 23.57, Communications Regulations, for regulation of

LH COUNCIL CLERK

Chart A for ((~~Section~~)) 23.47A.004 Uses in Commercial Zones						
		PERMITTED AND PROHIBITED USES BY ZONE (1)				
	USES	NC1	NC2	NC3	C1	C2
communication utilities.						

Section 3. Section 23.47A.005 of the Seattle Municipal Code, which section was adopted by Ordinance 122311, is amended as follows:

23.47A.005 Street-level uses((~~.~~))

A. The requirements of this section apply in addition to the other applicable requirements of this title.

B. ((~~Parking, m~~))Mini-warehouses, warehouses, or utility uses may not abut a street-level street-facing facade in a structure that contains more than one residential dwelling unit.

((~~C. In NC zones in new structures, street-level parking must be separated from the street-level, street-facing facade by another permitted use.~~))

((~~D~~))C. Residential uses at street level.

1. Residential uses are generally permitted anywhere in a structure in NC1, NC2, NC3, and C1 zones, except as provided in subsections ((~~D2 and D3~~)) 23.47A.005.C.2 and 23.47A.005.C.3 ((~~, below~~)).

2. Residential uses may not occupy, in the aggregate, more than 20((~~%~~)) percent of the street-level street-facing facades in the following circumstances or locations:

a. In a pedestrian-designated zone, facing a designated principal pedestrian street;

b. Within the Bitter Lake Village Hub Urban Village; or

c. Within the Lake City Hub Urban Village.

3. Residential uses may not exceed, in the aggregate, 20((~~%~~)) percent of the-street-level street-facing facades when facing an arterial or within a zone that has a height limit of ((~~eighty-five (85)~~)) 85 feet or higher, except that there is no limit on residential uses ((~~may occupy 100% of the street-level street-facing facade~~)) in the following circumstances or locations:

a. Within a very low-income housing project existing as of May 1, 2006, or within a very low-income housing project replacing a very low-income housing project existing as of May 1, 2006 on the same site.

b. The residential use is an assisted living facility or nursing home and private living units are not located at street level.

c. Within the Station Area Overlay District, in which case the provisions of Chapter 23.61 apply.

d. Within the International Special Review District east of the Interstate 5 Freeway, in which case the provisions of Section 23.66.330 apply.

4. ((~~Additions.~~)) Additions to, or on-site accessory structures for, existing single-family structures are permitted outright.

5. ((~~Timing of construction of residential structures on lots subject to limits on street-level residential uses.~~)) Where residential uses at street level are limited to 20((~~%~~)) percent of the street-level street-facing facade, such limits do not apply to residential structures separated

LH COUNCIL CLERK

from the street lot line by an existing structure meeting the standards of this section and Section 23.47A.008, or by an existing structure legally nonconforming to those standards. ((~~, and an applicant proposes to locate residential uses in a street-level facade to an extent that would not be permitted if no other structures were on the lot, and proposes to include street-level nonresidential uses in a separate structure between such facade and the street, no temporary or final certificate of occupancy shall be issued for the structure(s) including such residential uses until substantial construction of the structure(s) to include such nonresidential uses is achieved and a schedule for completion thereof is presented to and approved by the Director. "Substantial construction" means, for purposes of this subsection, that the framing of the exterior walls has been inspected and approved~~.))

((~~E~~))D. ((~~Pedestrian-designated zones.~~)) In pedestrian-designated zones the locations of uses are regulated as follows:

1. Along designated principal pedestrian streets, one or more of the following uses ((~~not listed in this subsection~~)) are required along 80 percent of the street-level street-facing facade in accordance with the standards provided in subsection 23.47A.008.C ((~~may not exceed, in the aggregate, 20% of the street-level street-facing facade~~)).

a. General sales and services;

b. Major durables retail sales;

c. Eating and drinking establishments;

d. Lodging uses;

e. Theaters and spectator sports facilities;

LH COUNCIL CLERK

f. Indoor sports and recreation;

g. Medical services;

h. Rail transit facilities;

i. Museum;

j. Community clubs or centers;

k. Religious facility;

l. Library;

m. Elementary or secondary school;

n. Parks and open space.

The establishment of any such use is subject to the applicable use provisions of this title.

* * *

Section 4. Subsection B of Section 23.47A.006 of the Seattle Municipal Code, which section was adopted by Ordinance 122311, is amended as follows:

23.47A.006 Conditional Uses((~~.~~))

* * *

B. The following uses, where identified as administrative conditional uses on Chart A ((~~of~~)) for Section 23.47A.004, or other features of development identified in this Section, may be permitted by the Director when the provisions of subsection 23.47A.006.A are met, subject to the further provisions ((~~below in~~)) of this subsection:

* * *

LH COUNCIL CLERK

6. ((~~Lodging uses in NC2 zones.~~)) Lodging uses in NC2 zones are permitted up to 25,000 sq. ft., when all of the following conditions are met, except that bed and breakfasts in existing structures are permitted outright with no maximum size limit:

a. The lodging use contains no more than ((~~50~~)) fifty units;

((~~b. The proposed development is subjected to City design review, whether required by SMC Chapter 23.41 or not;~~))

((~~c~~))b. The design of the development, including but not limited to signing and illumination, is compatible with surrounding commercial areas; and

((~~d~~))c. Auto access is via an arterial street ((~~that does not draw traffic through primarily residentially zoned areas~~)).

* * *

Section 5. Section 23.47A.008 of the Seattle Municipal Code, which section was adopted by Ordinance 122311, is amended as follows:

23.47A.008 Street-level development standards((~~,~~))

A. Basic street-level requirements.

1. The provisions of this subsection apply to:

a. Structures in NC zones((~~,~~));

b. Structures that contain a residential use in C zones((~~,~~)); and

c. Structures in C zones across the street from residential zones.

2. Blank facades.

LH COUNCIL CLERK

a. For purposes of this section, facade segments are considered blank if they do not include at least one of the following:

1) Windows;

2) Entryways or doorways;

3) Stairs, stoops, or porticos;

4) Decks or balconies; or

5) Screening and landscaping on the façade itself.

((~~a.~~))b. Blank segments of the street-facing facade between ((~~two (2)~~)) 2 feet and ((~~eight (8)~~)) 8 feet above the sidewalk may not exceed ((~~twenty (20)~~)) 20 feet in width.

((~~b.~~))c. The total of all blank facade segments may not exceed ((~~forty (40)~~)) 40 percent of the width of the facade of the structure along the street.

((~~c. Facade segments that do not include at least one of the following shall be considered blank:~~

~~(1) Windows;~~

~~(2) Entryways or doorways;~~

~~(3) Stairs, stoops, or porticos;~~

~~(4) Decks or balconies; or~~

~~(5) Screening and landscaping.~~))

3. ((~~Setbacks.~~)) Street-level street-facing facades ((~~must~~)) shall be located within ((~~ten (10)~~))10 feet of the street lot line, unless wider sidewalks, plazas, or other approved landscaped or open spaces are provided.

LH COUNCIL CLERK

B. Nonresidential street level requirements.

1. The provisions of this subsection and ((~~subsection~~)) 23.47A.008.A apply to:

a. Structures with street-level nonresidential uses in NC zones((~~.~~));

b. Structures with street-level nonresidential uses that also contain residential uses in C zones((~~,~~)); and

c. Structures with street-level nonresidential uses in C zones across the street from residential zones.

2. Transparency.

a. Sixty (((~~60~~))) percent of the street-facing facade between ((~~two (2)~~)) 2 feet and ((~~eight (8)~~)) 8 feet above the sidewalk shall be transparent.

b. Transparent areas of facades shall be designed and maintained to allow unobstructed views from the outside into the structure or, in the case of live-work units, into display windows that have a minimum ((~~thirty (30)~~)) 30-inch depth.

3. ((~~Height and depth of nonresidential space.~~))The following height and depth provisions apply to new structures or new additions to existing structures:

a. Nonresidential uses ((~~must~~)) shall extend an average of at least ((~~thirty (30)~~)) 30 feet and a minimum of ((~~fifteen (15)~~)) 15 feet in depth from the street-level street-facing facade. ((~~, except that if~~)) If the combination of the street-facing facade requirement of subsection 23.47A.008.D.1 and this depth requirement((~~s~~)) would result in a requirement that an area ((~~space~~)) greater than ((~~fifty (50)~~)) 50 percent of the structure's footprint be dedicated to nonresidential use, the Director ((~~shall~~)) may modify the street-facing facade or depth

LH COUNCIL CLERK

requirements, or both, so that no more than ((~~to reduce the space to fifty (50)~~)) 50 percent of the structure's footprint is required to be nonresidential.

b. Nonresidential uses at street level ((~~must~~)) shall have a floor-to-floor height of at least ((~~thirteen (13)~~)) 13 feet.

C. ((~~Pedestrian Designation.~~)) In pedestrian-designated zones, the provisions of subsections 23.47A008.A and 23.47A.008.B and the following apply:

1. A minimum of ((~~eighty (80)~~)) 80 percent of the width of a structure's street-level street-facing facade that faces a principal pedestrian street ((~~must~~)) shall be occupied by uses listed in 23.47A.005.D.1((~~E1~~)). The remaining ((~~twenty (20)~~)) 20 percent of the street frontage may contain other permitted uses and/or pedestrian entrances (see Exhibit A for 23.47A.008((~~A~~))).

Exhibit A for 23.47A.008((~~A~~))

Uses and pedestrian access allowed along street-level, street facing facades

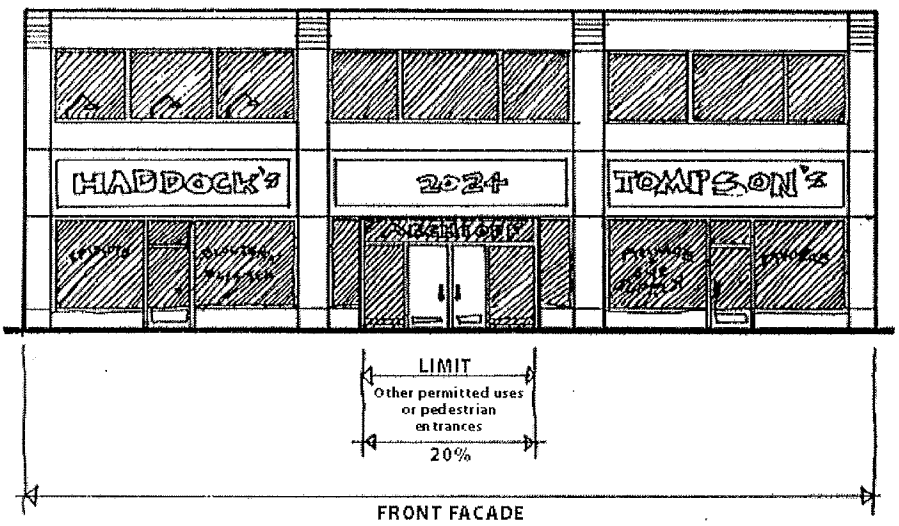

2. For purposes of calculating the ((~~eighty (80)~~)) 80 percent of a structure's street-level façade, the width of a driveway at street level, not to exceed ((~~twenty-two (22)~~)) 22 feet, may be subtracted from the width of the street-facing facade if the access cannot be provided from an alley or from a street that is not a designated principal pedestrian street ((~~or from an alley~~)).

3. If the street-facing facade and depth requirements would result in a requirement that ((~~result in a space~~)) an area greater than ((~~fifty (50)~~)) 50 percent of the structure's footprint be dedicated to the uses in subsection 23.47A.005.D.1, the Director may modify the street-facing facade or depth requirements, or both, so that no more than ((~~to reduce the space to fifty (50)~~)) 50 percent of the structure's footprint is required to be dedicated to the uses in subsection 23.47A.005.D.1.

D. ((~~Residential street-level requirements.~~)) The provisions of this subsection apply to structures with residential uses located along a street-level street-facing façade:

1. Residential uses ((~~may be~~)) are limited to 20% of the street-level street-facing facade under section 23.47.005.D; ((~~. When a residential use is located on a street-level street-facing facade, the provisions of Subsection A and the following apply:~~))

((~~1.~~))2. At least one of the street-level street-facing facades containing a residential use ((~~must~~)) shall have a visually prominent pedestrian entry((~~.~~)); and

((~~2.~~))3. The floor of a dwelling unit located along the street-level street-facing facade shall be at least 4 feet above or 4 feet below sidewalk grade or be set back at least 10 feet from the sidewalk. ((~~Either the first floor of the structure at or above grade shall be at least four~~

LH COUNCIL CLERK

~~(4) feet above sidewalk grade or the street-level facade shall be set back at least ten (10) feet from the sidewalk.~~))

E. ((~~Live-work unit standards.~~))When a live-work unit is located on a street-level street-facing facade, the provisions of ((~~S~~))subsections 23.47A.008.A and 23.47A.008.B apply, and the portion of each such live-work unit in which business is conducted must be located between the principal street and the residential portion of the live-work unit.

F. ((~~Departures:~~))The Director may allow departures from street-level requirements of this section for projects that are not subject to the Design Review process, as a Type I decision, if the Director determines that the project will maintain the safety and aesthetics of the streetscape for pedestrians and will:

1. ((~~M~~))maintain pedestrian access to the structure;

2. ((~~M~~))maintain urban form consistent with adjacent structures;

3. ((~~M~~))maintain the visibility of nonresidential uses;

4. ((~~M~~))maintain the privacy of residential uses; or

5. ((~~A~~))allow the continued use of an existing structure without substantial renovation.

Section 6. Subsections A, B, C, D, Map A, Exhibit B, and Exhibit C of Section 23.47A.012 of the Seattle Municipal Code, which section was adopted by Ordinance 122738, are amended as follows:

23.47A.012 Structure height((~~.~~))

A. ((~~Maximum Height.~~)) The height limit for structures in NC zones or C zones is ((~~thirty (30)~~)) 30 feet, ((~~forty (40)~~)) 40 feet, ((~~sixty-five (65)~~)) 65 feet, ((~~eighty-five (85)~~)) 85 feet, ((~~one hundred twenty-five (125)~~)) 125 feet, or ((~~one hundred sixty (160)~~)) 160 feet, as designated on the Official Land Use Map, Chapter 23.32. Structures may not exceed the applicable height limit, except as otherwise provided in this section. Within the South Lake Union Urban Center, any modifications or exceptions to maximum structure height are allowed solely according to the provisions of the Seattle Mixed Zone, subsections 23.48.010.B.1-3, 23.48.010.D and 23.48.010.E, and not according to the provisions of this section.

1. In zones with a ((~~thirty (30)~~)) 30 foot or ((~~forty (40)~~)) 40 foot mapped height limit((~~, except in the South Lake Union Urban Center~~)):

a. the height of a structure may exceed the otherwise applicable limit by up to ((~~four (4)~~)) 4 feet, subject to subsection 23.47A.012.A.1.c ((~~of this section~~)), provided the following conditions are met:

((~~(~~))1) Either

((~~(a)~~))i. A floor-to-floor height of ((~~thirteen (13)~~)) 13 feet or more is provided for nonresidential uses at street level; or

((~~(b)~~))ii. A residential use is located on a street-level, street-facing facade, and the first floor of the structure at or above grade is at least ((~~four (4)~~)) 4 feet above sidewalk grade; and

LH COUNCIL CLERK

((~~(~~))2) The additional height allowed for the structure will not allow an additional story beyond the number that could be built under the otherwise applicable height limit.

b. The height of a structure may exceed the otherwise applicable limit by up to ((~~seven (7)~~)) 7 feet, subject to subsection 23.47A.012.A.1.c ((~~of this section~~)), provided all of the following conditions are met:

((~~(~~))1) Residential and multipurpose retail sales uses are located in the same structure;

((~~(~~))2) The total gross floor area of at least one ((~~(1)~~)) multi-purpose retail sales use exceeds ((~~twelve thousand (12,000)~~)) 12,000 square feet;

((~~(~~))3) A floor-to-floor height of ((~~sixteen (16)~~)) 16 feet or more is provided for the multi-purpose retail sales use at street level;

((~~(~~))4) The additional height allowed for the structure will not allow an additional story beyond the number that could be built under the otherwise applicable height limit if a ((~~sixteen (16)~~)) 16 foot floor-to-floor height were not provided at street level; and

(5) The structure is not allowed additional height under subsection 23.47A.012.A.1.a ((~~of this section~~)).

c. The Director shall reduce or deny the additional structure height permitted by this subsection ((~~A1~~)) if the additional height otherwise would significantly block views from neighboring residential structures of any of the following: Mount Rainier, the

LH COUNCIL CLERK

Olympic and Cascade Mountains, the downtown skyline, Green Lake, Puget Sound, Lake Washington, Lake Union, and the Ship Canal.

2. For any lot within the designated areas shown on ((~~Map 23.47A.012 A~~)) Map A of 23.47A.012, the ((~~maximum structure~~)) height limit in NC zones or C zones designated with a ((~~forty (40)~~)) 40-foot height limit on the Official Land Use Map may be increased to ((~~sixty-five (65)~~)) 65 feet and may contain floor area as permitted for a 65' zone, pursuant to 23.47A.013, provided that all portions of the structure above ((~~forty (40)~~)) 40 feet contain only residential uses, and provided that no additional height is allowed under subsection 23.47A.012.A.1 ((~~of this section.~~))

Map 23.47A.012 A

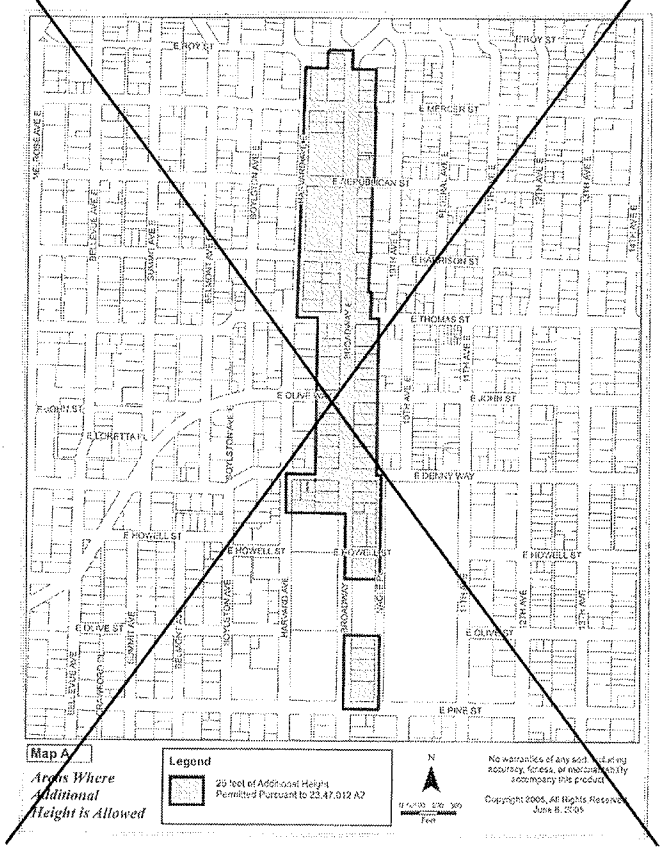

Map A of 23.47A.012

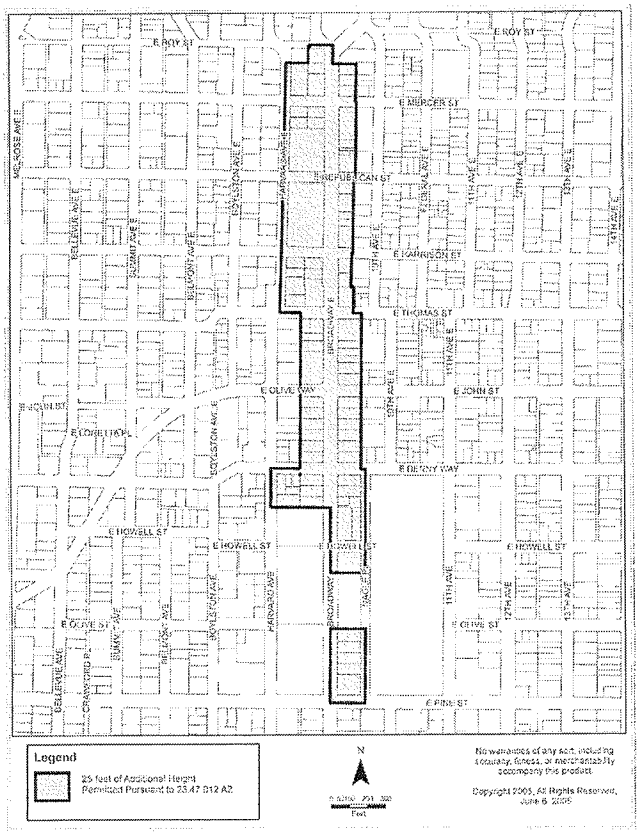

* * *

B. ((~~Sloped Lots.~~)) On sloped lots, except in the South Lake Union Urban Center, additional height is permitted along the lower elevation of the structure footprint, at the rate of ((~~one (1)~~)) 1 foot for each ((~~six (6)~~)) 6 percent of slope, to a maximum additional height of ((~~five (5)~~)) 5 feet (see Exhibit B for 23.47A.012((~~B~~))) above the otherwise applicable height limit.

LH COUNCIL CLERK

((~~Exhibit 23.47A.012 B~~))

Exhibit B for 23.47A.012

Height Limits on Sloped Sites

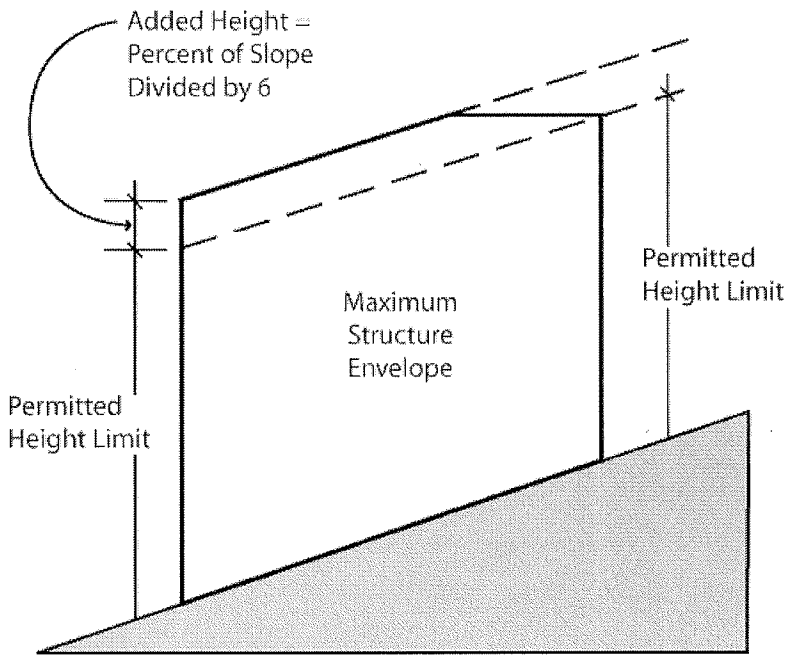

* * *

C. ((~~Pitched Roofs.~~))The ridge of a pitched roof, other than a shed roof or butterfly roof, may extend up to ((~~five (5)~~)) 5 feet above the otherwise applicable height limit in zones with height limits of ((~~thirty (30)~~)) 30 or ((~~forty (40)~~)) 40 feet, if all parts of the roof above the otherwise applicable height limit are pitched at a rate of not less than ((~~three to twelve (3:12)~~)) 4:12 (Exhibit C for 23.47A.012((~~C~~))).

LH COUNCIL CLERK

Exhibit 23.47A.012 C
Pitched Roof Height Exception

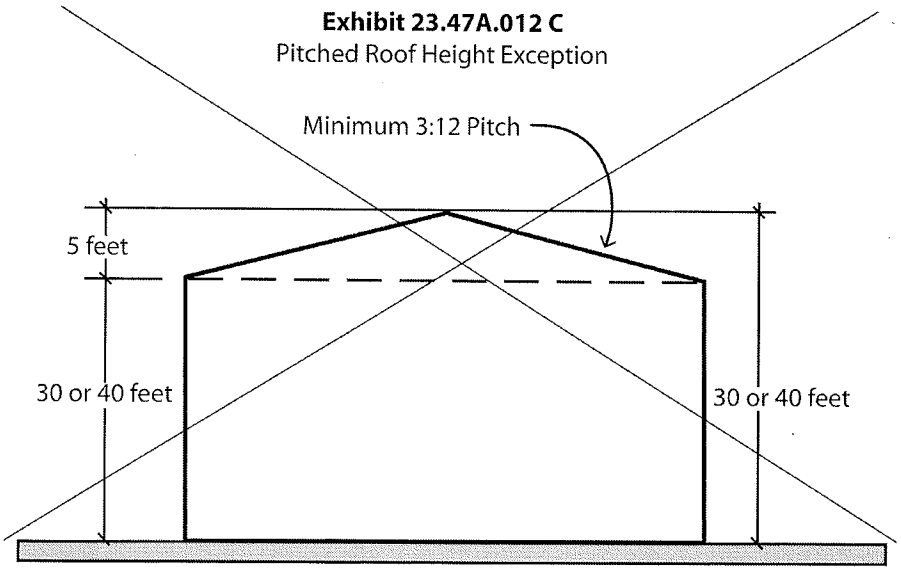

((~~Exhibit 23.47A.012 C~~))

Exhibit C for 23.47A.012

Pitched Roof Height Exception

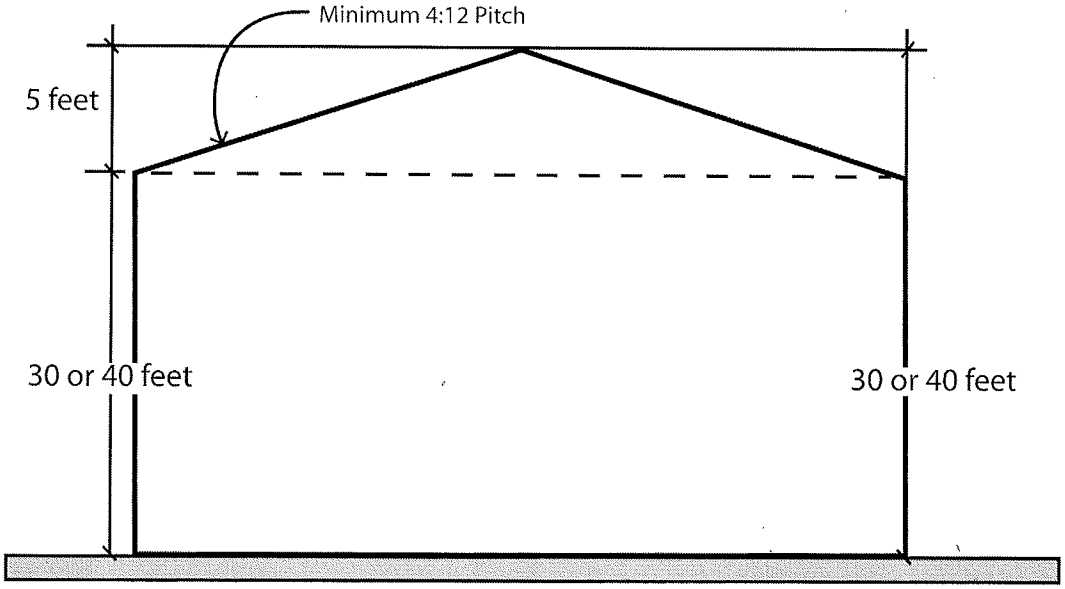

LH COUNCIL CLERK

D. Rooftop Features.

1. Smokestacks, chimneys, flagpoles, and religious symbols for religious institutions are exempt from height controls, except as regulated in Chapter 23.64, Airport Height Overlay District, provided they are a minimum of ((~~ten (10)~~)) 10 feet from any side or rear lot line.

2. Open railings, planters, skylights, clerestories, greenhouses, parapets, and firewalls may extend as high as the highest ridge of a pitched roof permitted by subsection 23.47A.012.C or up to ((~~four (4)~~)) 4 feet above the otherwise applicable height limit, whichever is higher.

3. Solar Collectors.

a. In zones with mapped height limits of ((~~thirty (30) or forty (40)~~)) 30 or 40 feet, solar collectors may extend up to ((~~four (4)~~)) 4 feet above the otherwise applicable height limit, with unlimited rooftop coverage.

b. In zones with height limits of ((~~sixty-five (65)~~)) 65 feet or more, solar collectors may extend up to ((~~seven (7)~~)) 7 feet above the otherwise applicable height limit, with unlimited rooftop coverage.

4. Except as provided below, ((~~T~~))the following rooftop features may extend up to ((~~fifteen (15)~~)) 15 feet above the otherwise applicable height limit, ((~~so~~)) as long as the combined total coverage of all features gaining additional height listed in this subsection does not exceed ((~~twenty (20)~~)) 20 percent of the roof area or ((~~twenty-five (25)~~)) 25 percent of the roof area if the total includes stair or elevator penthouses or screened mechanical equipment:

L.H. COUNCIL CLERK

a. Solar collectors;

((~~b. Stair and elevator penthouses;~~))

((~~e~~)) b. Mechanical equipment;

((~~d~~)) c. Play equipment and open-mesh fencing that encloses it, as long as the fencing is at least ((~~fifteen (15)~~)) 15 feet from the roof edge; ((~~and~~))

((~~e~~)) d. Wind-driven power generators;

e. Minor communication utilities and accessory communication devices, except that height is regulated according to the provisions of Section 23.57.012((~~.~~)); and

f. Stair and elevator penthouses may extend above the applicable height limit up to 16 feet. When additional height is needed to accommodate energy-efficient elevators in zones with height limits of 125 feet or greater, elevator penthouses may extend the minimum amount necessary to accommodate energy-efficient elevators, up to 25 feet above the applicable height limit. Energy-efficient elevators shall be defined by Director's Rule. When additional height is allowed for an energy-efficient elevator, stair penthouses may be granted the same additional height if they are co-located with the elevator penthouse.

5. Within the South Lake Union Urban Center, the combined total coverage of all features listed in subsection 23.47A.012.D.4 may be increased to ((~~sixty-five (65)~~)) 65 percent of the roof area, provided that the following are satisfied:

a. The additional rooftop coverage allowed by this subsection is used to accommodate mechanical equipment that is accessory to a research and development laboratory; and

b. All mechanical equipment is screened; and

c. No rooftop features other than wind-driven power generators are located closer than ((~~ten (10)~~)) 10 feet from the roof edge.

6. The rooftop features listed in this subsection ((~~D6 must~~)) shall be located at least ((~~ten (10)~~)) 10 feet from the north edge of the roof unless a shadow diagram is provided that demonstrates that locating such features within ((~~ten (10)~~)) 10 feet of the north edge of the roof would not shade property to the north on January 21st at noon more than would a structure built to maximum permitted height and FAR:

a. Solar collectors;

b. Planters;

c. Clerestories;

d. Greenhouses;

e. Minor communication utilities and accessory communication devices, permitted ((~~according~~)) pursuant to the provisions of Section 23.57.012;

f. Non-firewall parapets;

g. Play equipment.

7. Structures existing prior to May 10, 1986 may add new or replace existing mechanical equipment up to ((~~fifteen (15)~~)) 15 feet above the roof elevation of the structure and shall comply with the noise standards of Section 23.47A.018.

8. For height limits and exceptions for communication utilities and accessory communication devices, see Section 23.57.012.

LH COUNCIL CLERK

* * *

Section 7. Subsections B, C, D, and E of Section 23.47A.013 of the Seattle Municipal Code, which section was adopted by Ordinance 122738, are amended as follows:

23.47A.013 Floor area ratio((.))

* * *

B. Except as provided in subsections C, D and E of this section, maximum FAR allowed in C zones and NC zones is shown in Chart A for 23.47A.013.

Chart A for 23.47A.013 Maximum Floor Area Ratio (FAR) Outside of the Station Area Overlay District						
	Height Limit					
	30'	**40'**	**65'**	**85'**	**125'**	**160'**
	Maximum FAR					
1. ((~~For residential or nonresidential structures.~~)) Total permitted for a single-purpose structure containing only residential or non-residential use.	2.25	3	4.25	4.5	5	5
2. Total permitted for any single use within a mixed-use structure	n/a	n/a	4.25	4.5	5	5
((~~2. For structures containing both residential and nonresidential uses.~~)) 3. Total permitted for all uses within a mixed-use structure containing residential and non-residential uses.	2.5	3.25	4.75	6	6	7

C. Maximum FAR allowed in NC zones or C zones within the Station Area Overlay District is shown in Chart B for 23.47A.013.

Chart B for 23.47A.013 Maximum Floor Area Ratio (FAR) in the Station Area Overlay District						
	Height Limit					
	30'	40'	65'	85'	125'	160'
Maximum FAR	3	4	5.75	6	6	7

LH COUNCIL CLERK

D. The following gross floor area is not counted toward FAR ((~~exempt from calculation of gross floor area subject to FAR limits~~)):

1. ((~~All g~~))Gross floor area below ((~~existing or finished~~)) grade((~~, whichever is lower~~));

2. Gross floor area of a transit station, including all floor area open to the general public during normal hours of station operation but excluding retail or service establishments to which public access is limited to customers or clients, even where such establishments are primarily intended to serve transit riders;

3. Within the South Lake Union Urban Center, gross floor area occupied by mechanical equipment located on the roof of a structure;

4. Within the South Lake Union Urban Center, mechanical equipment that is accessory to a research and development laboratory, up to ((~~fifteen (15)~~)) 15 percent of the gross floor area of a structure. The allowance is calculated on the gross floor area of the structure after all space exempt under this subsection is deducted; and

5. Within the First Hill Urban Center Village, on lots zoned NC3, with a ((~~one hundred and sixty (160)~~)) 160 foot height limit, all gross floor area occupied by a residential use.

* * *

E. Within the Station Area Overlay District within the University District Northwest Urban Center Village, for office structures permitted prior to 1971, the area of the lot for purposes of calculating permitted FAR is the tax parcel created prior to the adoption of

LH COUNCIL CLERK

Ordinance 121846 on which the existing structure is located, provided the office structure is to be part of a functionally related development occupied by a single entity with over ((~~five hundred thousand (500,000)~~)) 500,000 square feet of area in office use. The floor area of above grade pedestrian access is exempt from the FAR calculations of this subsection, and the maximum permitted FAR is ((~~eight (8)~~)) 8.

* * *

Section 8. Subsections B and F and Exhibits A, B and C of Section 23.47A.014 of the Seattle Municipal Code, which section was adopted by Ordinance 122311, are amended as follows:

23.47A.014 Setback requirements

* * *

B. ((~~Rear and side s~~))Setback requirements for lots ((~~adjacent to~~)) abutting or across the alley from residential zones.

1. A setback is required ((~~on any~~)) where a lot ((~~that~~)) abuts the intersection of a side lot line and front lot line of a lot in a residential zone. The required setback forms a triangular area. Two ((~~(2)~~)) sides of the triangle ((~~must each~~)) extend along the street lot line and side lot line ((~~fifteen (15)~~)) 15 feet from the intersection of the residentially zoned lot's ((~~street~~)) front lot line and the side lot line abutting the residentially zoned lot. The third side connects these two ((~~(2)~~)) sides with a diagonal line across the commercially-zoned lot (Exhibit A for 23.47A.014((~~A~~))).

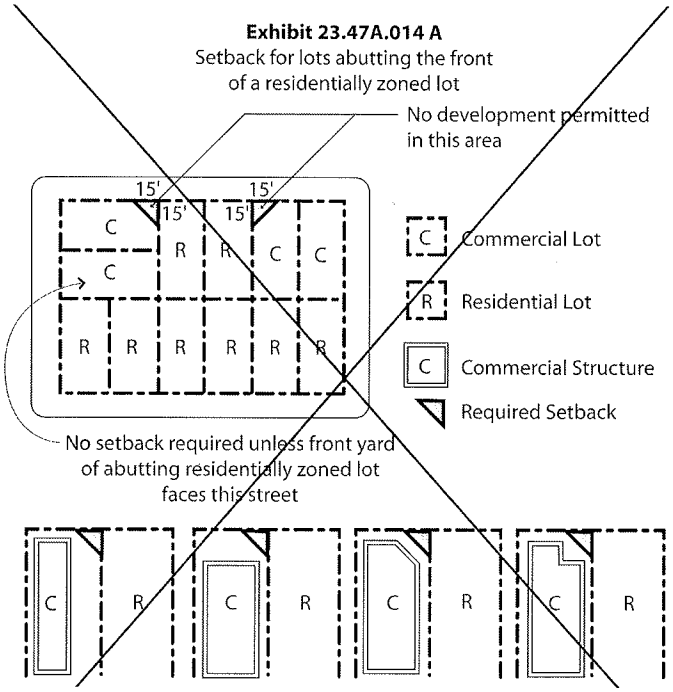

Exhibit A for 23.47A.014

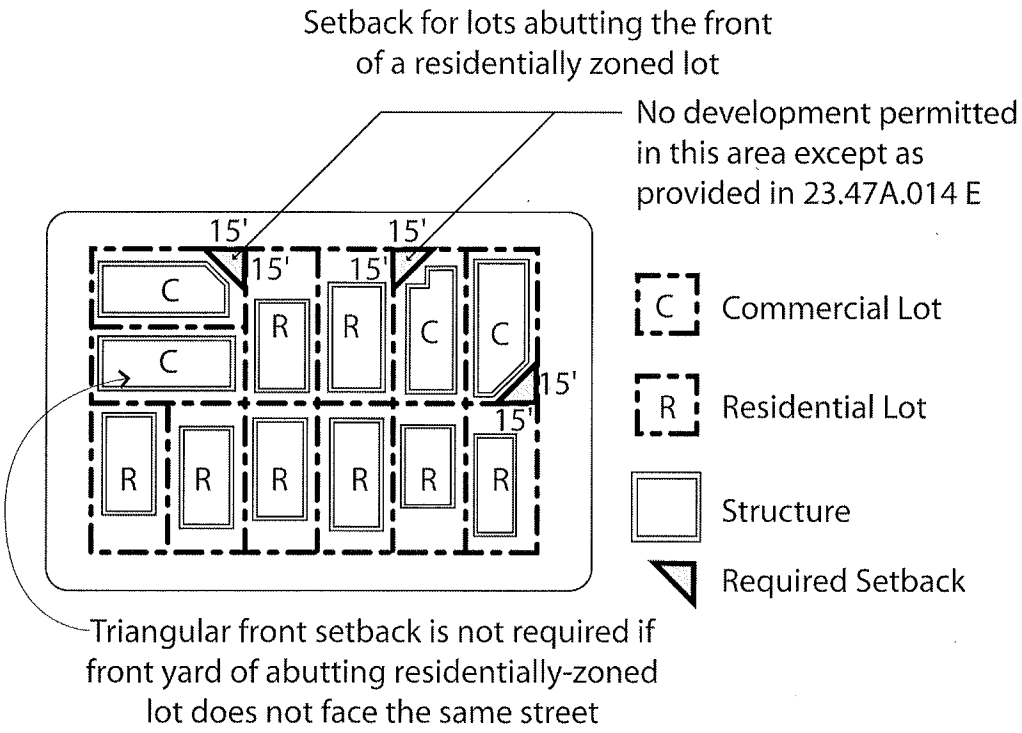

LH COUNCIL CLERK

2. A setback is required along any rear or side lot line that abuts a lot in a residential zone, as follows:

a. Ten ((~~(10)~~)) feet for portions of structures above ((~~thirteen (13)~~)) 13 feet in height to a maximum of ((~~sixty-five (65)~~)) 65 feet; and

b. For each portion of a structure above ((~~sixty-five (65)~~)) 65 feet in height, additional setback at the rate of ((~~one (1)~~)) 1 foot of setback for every ((~~ten (10)~~)) 10 feet by which the height of such portion exceeds ((~~sixty-five (65)~~)) 65 feet (Exhibit B for 23.47A.014((~~B~~))).

((~~**Exhibit 23.47A.014 B**~~))

Exhibit B for 23.47A.014

LH COUNCIL CLERK

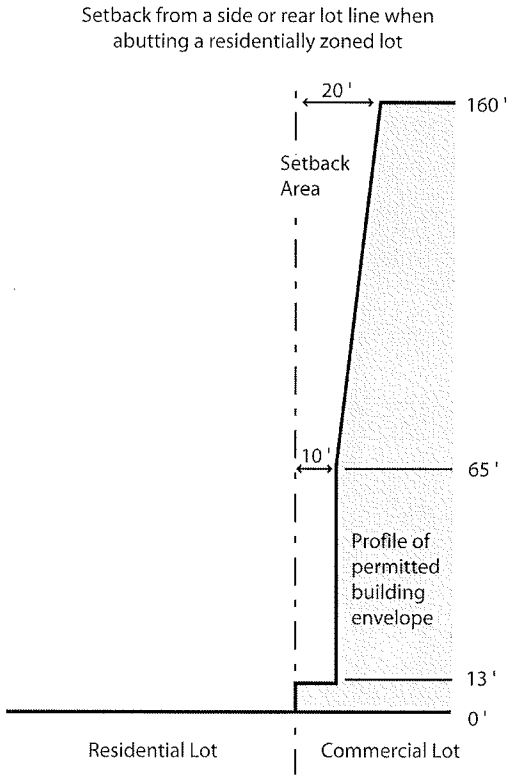

3. ((~~Structures with more than one dwelling unit.~~)) For a structure ((~~with more than one dwelling unit~~)) containing a residential use, a setback is required along any rear lot line that abuts a lot in a residential zone or that is across an alley from a lot in a residential zone, as follows:

a. Fifteen ((~~(15)~~)) feet for portions of structures above ((~~thirteen (13)~~)) 13 feet in height to a maximum of ((~~forty (40)~~)) 40 feet; and

b. For each portion of a structure above ((~~forty (40)~~)) 40 feet in height, additional setback at the rate of ((~~two (2)~~)) 2 feet of setback for every ((~~ten (10)~~)) 10 feet by which the height of such portion exceeds ((~~forty (40)~~)) 40 feet (Exhibit C for 23.47A.014((~~C~~))).

Exhibit C for 23.47A.014 ((~~C~~))

LH COUNCIL CLERK

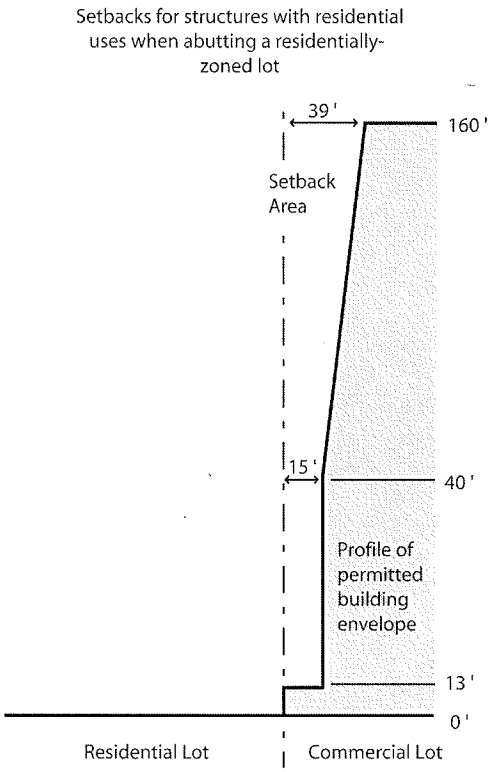

4. One-half (((~~1/2~~))) of the ((~~alley~~)) width of an abutting alley may be counted as part of the required setback. For the purpose of this section, the alley width and the location of the rear lot line shall be determined prior to any dedication that may be required for alley improvement purposes.

5. No entrance, window, or other opening is permitted closer than ((~~five (5)~~)) 5 feet to ((~~a residential zone~~)) an abutting residentially-zoned lot.

* * *

F. Setback requirement for loading adjacent to an alley. Where access to a loading berth is from the alley, and truck loading is parallel to the alley, a setback of ((~~twelve (12)~~)) 12 feet is required for the loading berth, measured from the centerline of the alley (Exhibit D for 23.47A.014((~~D~~))). This setback must be maintained up to a height of ((~~sixteen (16)~~)) 12 feet.

Exhibit D for 23.47A.014 ((~~D~~))

Structure Setback for Truck Loading

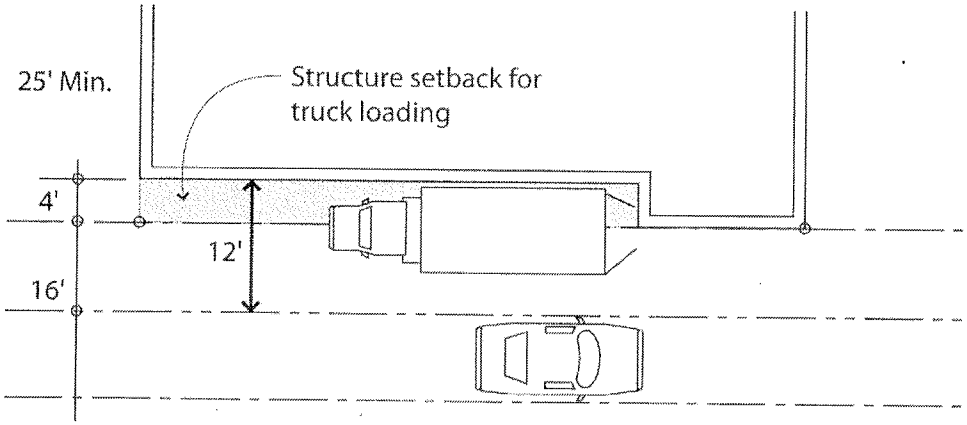

* * *

Section 9. Subsections A, B, C, D, and E, and Exhibits A, B, C, and D of Section 23.47A.016 of the Seattle Municipal Code, which section was adopted by Ordinance 122311, are amended as follows:

23.47A.016 Landscaping and screening standards((~~.~~))

A. Landscaping requirements.

1. The Director shall promulgate rules to foster the long-term health, viability, and coverage of plantings. The rules shall address, at a minimum, the type and size of plants, spacing of plants, use of drought-tolerant plants, and access to light and air for plants. All landscaping provided to meet the requirements of this section shall comply with these rules. ((~~Standards. All landscaping provided to meet requirements under this section must meet standards promulgated by the Director to provide for the long-term health, viability and coverage of plantings. The Director may promulgate standards relating to matters including, but not~~

LH COUNCIL CLERK

~~limited to, the type and size of plants, number of plants, concentration of plants, depths of soil, use of low water use plants and access to light and air for plants.~~))

2. ((~~Green Area Factor Requirement.~~)) Landscaping that achieves a ((~~g~~))Green ((~~f~~))Factor score of .30 or greater, pursuant to the procedures set forth in Section 23.86.019, is required for any lot with:

a. ((~~any new structure~~)) development containing more than four ((~~(4)~~)) new dwelling units; or

b. ((~~any new structure~~)) development containing more than ((~~four thousand (4,000)~~)) 4,000 new square feet of nonresidential uses; ((~~and~~)) or

c. any ((~~new~~)) parking lot containing more than ((~~twenty (20)~~)) 20 new parking spaces for automobiles.

((~~3. Green Area Factor Calculation. The green area factor score for a lot is determined as follows:~~

~~a. Multiply the square feet, or equivalent square footage where applicable, of each of the existing and proposed elements listed in Chart A of this Section by the green area multiplier shown for that element, according to the following provisions:~~

~~(1) If multiple elements listed on Chart A occupy an area (for example, groundcover under a tree), the full square footage or equivalent square footage of each element is used to calculate the product for that element.~~

LH COUNCIL CLERK

~~(2) Landscaping elements that are provided in the portions of rights-of-way abutting the lot that are between the lot line and the roadway may be included, except that permeable paving in the right-of-way may not be included.~~

~~(3) Elements listed in Chart A that are provided to satisfy any requirements of this chapter may be included.~~

~~(4) For trees and large shrubs, use the equivalent square footage of each tree or shrub according to Chart B of this Section.~~

~~(5) For vegetated walls, use the square footage of the portion of the wall covered by vegetation.~~

~~(6) For all elements other than trees, large shrubs and vegetated walls, square footage is determined by the area of the portion of a horizontal plane that underlies the element.~~

~~b. Add together all the products computed under subsection A3a to determine the total green area factor.~~

~~c. Divide the total green area factor by the lot area to determine the green area factor score.~~

~~**Chart A of Section 23.47A.016**~~		
~~**Green Area Factor Elements***~~		~~**Multiplier**~~
~~A. Vegetation planted with a soil depth of less than twenty-four (24) inches:~~		
- -	~~1. Lawn, grass pavers, ground covers or other plants normally expected to be less than three (3) feet tall at maturity.~~	~~0.2~~
- -	~~2. Large shrubs~~	~~0.3~~

LH COUNCIL CLERK

~~B. Landscaping elements planted with a soil depth of twenty-four (24) inches or more:~~		
- -	~~1. Lawn, grass pavers, ground covers or other plants normally expected to be less than three (3) feet tall at maturity.~~	~~0.7~~
- -	~~2. Large shrubs~~	~~0.3~~
- -	~~3. Small trees~~	~~0.3~~
- -	~~4. Small/medium trees~~	~~0.3~~
- -	~~5. Medium/large trees~~	~~0.4~~
- -	~~6. Large trees~~	~~0.4~~
- -	~~7. Exceptional trees and exceptionally large trees~~	~~0.5~~
- -	~~8. Permeable paving at grade~~	~~0.6~~
~~C. Green roofs planted with a soil depth of at least four (4) inches~~		~~0.7~~
~~D. Vegetated walls~~		~~0.7~~
~~E. Water features under water at least nine (9) months per year or rain gardens.~~ -		~~0.7~~
~~F. Bonuses applied to Green Factor Elements, above:~~		
- -	~~1. Landscaping that consists entirely of drought tolerant species, as defined by the Director, or landscaping areas that are designed for at least fifty (50) percent of irrigation to be provided through use of harvested rainwater.~~	~~0.1~~
- -	~~2. Landscaping visible to passersby.~~	~~0.1~~

~~* A feature may qualify as an element in this Chart only if it satisfies applicable conditions in rules promulgated by the Director for such element, if any.~~

~~**Chart B of 23.47A.016**~~ ~~**Equivalent square footage of trees and large shrubs**~~

LH COUNCIL CLERK

~~Landscaping Elements~~	~~Equivalent Square Feet~~
~~Large shrubs~~	~~16 square feet per shrub~~
~~Small trees~~	~~50 square feet per tree~~
~~Small/medium trees~~	~~100 square feet per tree~~
~~Medium/large trees~~	~~150 square feet per tree~~
~~Large trees~~	~~200 square feet per tree~~
~~Exceptional trees and exceptionally large trees~~	~~250 square feet per tree~~))

B. Street tree requirements.

1. Street trees are required when any ((~~type of~~)) development is proposed, except as provided in subsection 23.47A.016.B.2 and Section 23.53.015. Existing street trees shall be retained unless the Director of Transportation approves their removal. The Director, in consultation with the Director of Transportation, will determine the number, type and placement of street trees to be provided((~~, based on the following considerations~~)):

a. to improve public safety ((~~space in the planting strip~~));

b. ((~~presence, type and spacing of~~))to promote compatibility with existing street trees((~~ in the area~~));

c. ((~~size of trees to be planted~~))to match trees to the available space in the planting strip;

d. ((~~distance required between trees in order to encourage healthy growth~~))to maintain and expand the urban forest canopy;

e. to encourage healthy growth through appropriate spacing;

f.((~~e. location of~~))to protect utilities; and

LH COUNCIL CLERK

((~~f.~~))g. to allow access to the street, buildings and lot.((~~;~~

~~g. viability of particular plants in the location; and~~

~~h. public safety.~~

~~Existing street trees count toward this requirement.~~))

2. Exceptions to street tree requirements.

a. If a lot borders an unopened ((~~street~~)) right-of-way, the Director may reduce or waive the street tree requirement along that street if, after consultation with the Director of Transportation, the Director determines that the street is unlikely to be ((~~developed~~)) opened or improved.

b. Street trees are not required ((~~as a condition to~~)) for any of the following:

((~~(~~))1) establishing, constructing or modifying single-family dwelling units; or

((~~(~~))2) changing a use, or establishing a temporary use or intermittent use; or

((~~(~~))3) expanding a structure by ((~~one thousand (1,000)~~)) 1,000 square feet or less; or

((~~(~~))4) expanding surface area parking by less than ((~~ten (10)~~)) 10 percent in area ((~~or~~)) and less than 10 percent in number of spaces.

3.((~~c.~~)) When an existing structure is proposed to be expanded by more than ~~one thousand (1,000)~~1,000 square feet, one street tree is required for each ((~~five hundred (500)~~)) 500

LH COUNCIL CLERK

square feet over the first ((~~one thousand (1,000)~~)) 1,000 square feet of additional structure, up to the maximum number of ((~~required~~)) trees that would be required for new construction.

((~~d. If street trees would obscure the visibility of retail uses or obstruct pedestrian access to retail uses, the Director may reduce or waive the street tree requirement after consultation with the Director of Transportation, and may condition the reduction or waiver on the provision of landscaping in addition to what otherwise would be required.~~))

((~~3.~~))4. If it is not feasible to plant street trees in ((~~an abutting~~)) a right-of-way planting strip, a 5-foot setback shall be planted with street trees along the street property line or landscaping other than trees ((~~is required~~)) shall be provided in the planting strip, subject to approval by the Director of ((~~the Department of~~))Transportation. If, according to the Director of ((~~the Department of~~))Transportation, a 5-foot setback or landscaped planting strip is not feasible, the Director of Planning and Development may reduce or waive this requirement.

C. General standards for screening and landscaping where required for specific uses.

1. Screening shall consist of fences, walls, hedges, or landscaped berms. Any type of screening shall be at least as tall as the height specified in subsection 23.47A.016.D.

((~~Screening required under subsection D must be either:~~

~~a. A fence or wall at least as tall as the height specified in subsection D; or~~

~~b. A hedge or landscaped berm at least as tall as the height specified in subsection D.~~))

2. Landscaped areas and berms required under subsection 23.47A.016.D must meet ((~~standards~~)) rules promulgated by the Director pursuant to subsection 23.47A.016.A.1.

LH COUNCIL CLERK

Decorative features such as decorative pavers, sculptures or fountains, or pedestrian access meeting the Seattle Building Code, Chapter 11((~~-- Accessibility~~)), may cover a maximum of ((~~thirty (30)~~)) 30 percent of each landscaped area or berm used to satisfy requirements under subsection 23.47A.016.D.

D. Screening and landscaping requirements for specific uses. When there is more than one use that requires screening or landscaping, the requirement that results in the greater amount applies.

1. Surface parking areas.

a. Landscaping requirements for ((~~in~~)) surface parking areas are summarized in Chart C for 23.47A.016. ((~~is required as follows:~~))

Chart C for 23.47A.016

Number of Parking Spaces	Required Landscaped Area
20 to 50	18 square feet/parking space
51 to 99	25 square feet/parking space
100 or more	35 square feet/parking space

((~~(~~))1) Each landscaped area shall be no smaller than ((~~one hundred (100)~~)) 100 square feet and must be enclosed by permanent curbs or structural barriers.

((~~(~~))2) No part of a landscaped area shall be less than ((~~four (4)~~)) 4 feet in ((~~any dimension~~)) width or length except those parts of landscaped areas created by turning radii or angles of parking spaces.

((~~(~~))3) No parking space shall be more than ((~~sixty (60)~~)) 60 feet from a required landscaped area.

LH COUNCIL CLERK

b. Trees in surface parking areas.

((~~f~~))1) One ((~~(1)~~))tree is required for every ten ((~~(10)~~)) parking spaces.

((~~f~~))2) Trees shall be selected in consultation with the Director of Transportation ((~~the City Arborist~~)).

c. Screening of surface parking areas.

((~~f~~))1) Three((~~(3)~~))-foot-high screening is required along street lot lines.

((~~f~~))2) Surface parking abutting or across an alley from a lot in a residential zone must have ((~~six (6)~~)) 6-foot-high screening along the abutting lot line((~~(s)~~)) and a ((~~five (5)~~)) 5-foot-deep landscaped area inside the screening (see Exhibit A for 23.47A.016((~~A~~))).

Exhibit A for 23.47A.016((~~A~~))

L-H COUNCIL CLERK

Screening of Surface Parking Areas Abutting a Residentially Zoned Lot

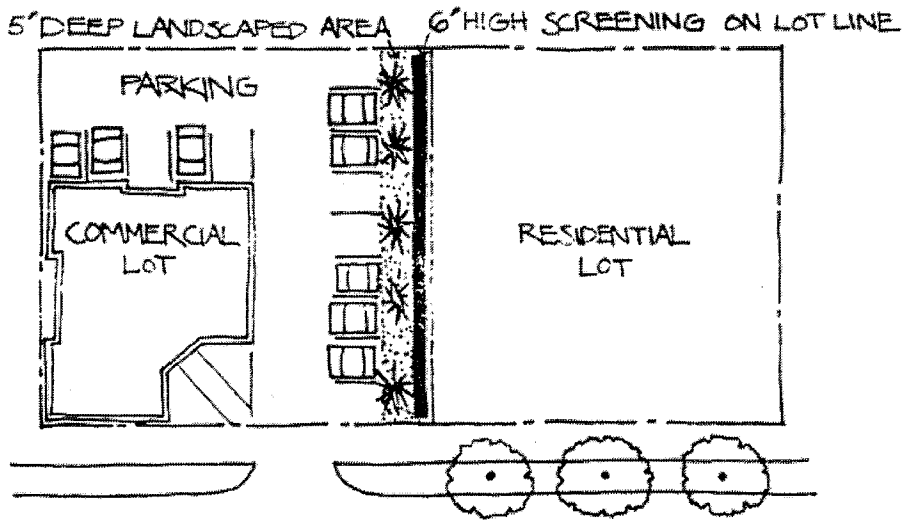

d. The Director may waive or reduce the requirements of this subsection 23.47A.016.D.1:

(((f))1) to improve safety;

(((f))2) to provide adequate maneuvering room for service vehicles;

(((f))3) when it would not otherwise be feasible to provide the required number of spaces; or

(((f))4) when required parking can only be provided at the rear lot line and access to individual parking spaces can only be provided directly from the alley.

e. In deciding whether and to what extent to waive or reduce the landscaping and screening requirements, the Director shall consider whether:

(((f))1) ((~~T~~))the lot width and depth permit alternative workable site plans that would allow screening and landscaping;

LM COUNCIL CLERK

((~~(~~))2) ((~~T~~))the character of uses across the alley, such as a parking garage accessory to a multifamily structure, makes the screening and landscaping less necessary;

((~~(~~))3) ((~~T~~))the lot is in a location where access to parking from the street is not permitted; and

((~~(~~))4) ((~~A~~))a topographic break between the alley and the residential zone makes screening less necessary.

2. Other uses or circumstances. Screening and landscaping is required according to ((~~Chart C of this section~~)) Chart D for 23.47A.016:

((~~Chart C of Section~~)) Chart D for 23.47A.016	
Use or ((e))Circumstance	**Minimum Requirement**
((~~a. Blank street-level street-facing facades~~))	((~~A five (5) foot deep landscaped area along the length of the blank facade, planted with trees and shrubs~~))
((~~b~~))a. Drive-in businesses abutting or across an alley from a lot in a residential zone	((~~Six (6)~~)) 6-foot-high screening along the abutting or alley lot lines; and A ((~~five (5)~~)) 5-foot-deep landscaped area inside the screening, when a drive-in lane((~~s~~)) or queuing lane abuts a lot in a residential zone
((e))b. Drive-in businesses, other than gas stations, in which the drive-in lane((~~s~~)) or queuing lanes are across the street from a lot in a residential zone	((~~Three (3)~~)) 3-foot-high screening
((~~d~~))c. Garbage cans in NC1, NC2, or NC3 zones, or associated with a structure containing a residential use in C1 or C2 zones	((~~Three (3)~~)) 3-foot-high screening along areas where garbage cans are located
((e))d. Garbage dumpsters in NC1, NC2, or NC3 zones, or associated with structures containing a residential use in C1 or C2 zones	((~~Six (6)~~)) 6-foot-high screening

COUNCIL CLERK

((~~Chart C of Section~~)) Chart D for 23.47A.016	
Use or ((e))Circumstance	**Minimum Requirement**
((~~f~~))e. Gas stations in NC1, NC2 and NC3 zones or, in C1 and C2 zones, across the street from a lot in a residential zone	((~~Three (3)~~)) 3-foot-high screening along street lot lines
((~~g~~))f. Mobile home parks	((~~Six (6)~~)) 6-foot-high screening along all lot lines that are not street lot lines; and Along all street lot lines, a ((~~five (5)~~)) 5-foot-deep landscaped area or a ((~~five (5)~~)) 5-foot-deep planting strip with street trees
((~~h~~))g. Outdoor sales and outdoor display of rental equipment, abutting or across an alley from a lot in a residential zone	((~~Six (6)~~)) 6-foot-high screening along the abutting or alley lot lines
((~~i~~))h. Outdoor sales and outdoor display of rental equipment across the street from a lot in a residential zone	((~~Three (3)~~)) 3-foot-high screening along the street lot line
((~~j~~))i. Outdoor storage in a C1 zone; or Outdoor dry boat storage in NC2, NC3 or C1 zones in the Shoreline District	Screened from all lot lines by the façade of the structure or by ((~~six (6)~~)) 6-foot-high screening; and ((~~Five (5)~~)) 5-foot-deep landscaped area between all street lot lines and the ((~~six (6)~~)) 6-foot-high screening (Exhibit C for 23.47A.016((~~C~~)))
((~~k~~))j. Outdoor storage in a C2 zone abutting a lot in a residential zone; or Outdoor dry boat storage in a C2 zone in the Shoreline District, abutting a lot in a residential zone	((~~Fifty (50)~~)) 50-foot setback from the lot lines of the abutting lot in a residential zone and screened from those lot lines by the façade of the structure or by ((~~six~~)) 6-foot-high screening (Exhibit D for 23.47A.016((~~D~~)))
((~~l~~))k. Outdoor storage in a C2 zone across the street from a lot in a residential zone; or Outdoor dry boat storage, in a C2 zone in the Shoreline District, across the street from a lot in a residential zone	Screened from the street by the facade of a structure, or by ((~~six (6)~~)) 6-foot-high screening
((~~m~~))l. Parking garage occupying any portion of the street-level street-facing facade between ((~~five (5)~~)) 5 and ((~~eight (8)~~))8 feet above sidewalk grade	A ((~~five (5)~~)) 5-foot-deep landscaped area along the street lot line; ((~~and either~~)) or Screening by the exterior wall of the structure((~~,~~));or ((~~Six (6)~~)) 6-foot-high screening between the structure and the landscaped area (Exhibit B for 23.47A.016((~~B~~)))

LH COUNCIL CLERK

((~~Chart C of Section~~)) Chart D for 23.47A.016	
Use or ((e))Circumstance	**Minimum Requirement**
((~~n~~))m. Unenclosed ((~~P~~))parking garage on lots abutting a lot in a residential zone((~~.~~))	A 5-foot-deep landscaped area and 6-foot-high screening along each shared lot line ((~~A five (5) foot deep landscaped area along the street lot line; and either Screening by the exterior wall of the structure, or Six (6) foot high screening along the shared lot line.~~))
((~~o~~))n. Parking garage that is ((~~eight (8)~~)) 8 feet or more above grade	((~~Three and one-half (3 ½)~~))3.5-foot screening along the perimeter of each floor of parking((~~.~~))
((~~p~~))o. ((~~P~~))Outdoor areas associated with pet daycare centers (((~~associated outdoor areas~~)))	Screened from all property lines by the facade of the structure or by ((~~six (6)~~)) 6-foot-high screening between the outdoor area and all property lines((~~.~~))

Exhibit B for 23.47A.016 ((~~B~~))

Screening of parking within or under a structure

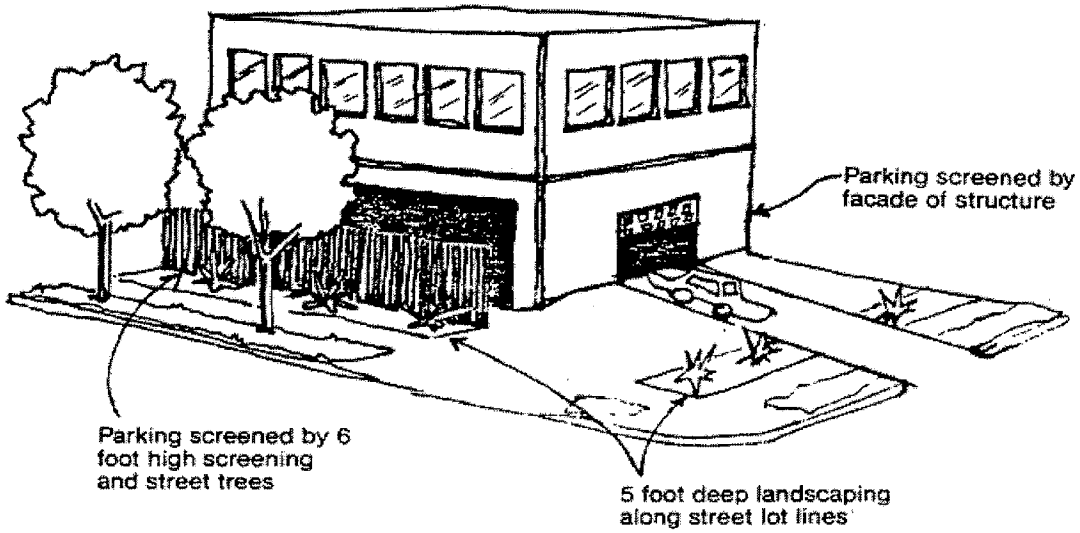

Exhibit C for 23.47A.016 ((~~C~~))

L.H. COUNCIL CLERK

Screening of open storage areas in C1 zones

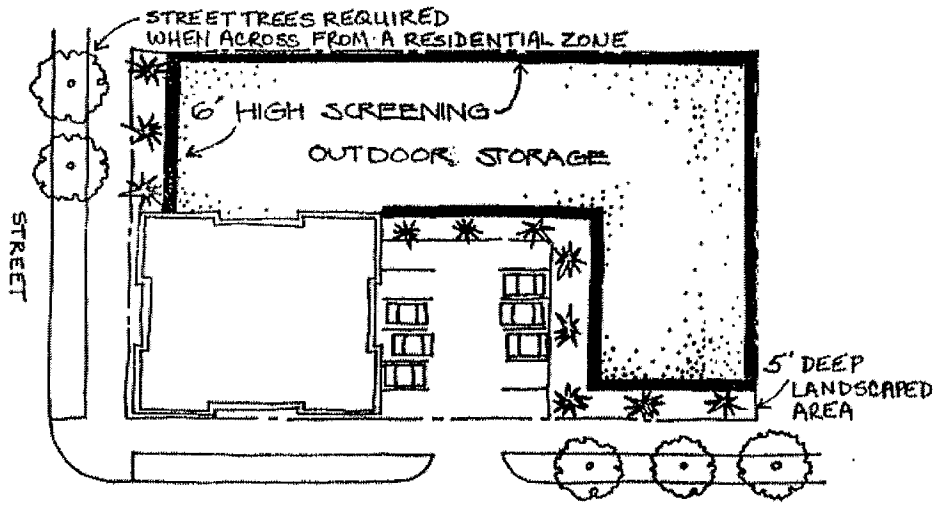

Exhibit D for 23.47A.016 ((~~D~~))

Screening of open storage areas in C2 zones

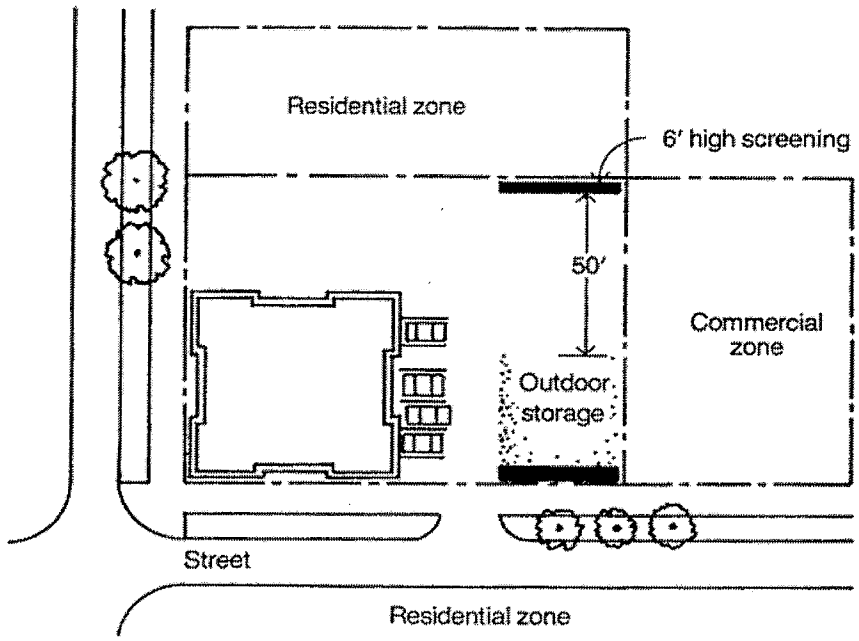

LH COUNCIL CLERK

3. ((~~Lots within the Shoreline District.~~)) On lots within the Shoreline District where view corridors are required, the Director may reduce the required height of screening and may modify the location and type of required landscaping so that views are not obstructed.

4. When one of the specific uses listed in this subsection 23.47A.016.D is proposed for expansion, the applicable requirements for that use must be met. The Director may reduce or waive the requirements where they are physically infeasible due to the location of existing structures or required parking.

E. ((~~Access through required screening.~~))Breaks in required screening are permitted to provide pedestrian and vehicular access. Breaks in required screening for vehicular access shall not exceed the width of permitted curb cuts.

Section 10. Subsection A of Section 23.47A.027 of the Seattle Municipal Code, which section was adopted by Ordinance 122311, is amended as follows:

23.47A.027 Landmark Districts and designated landmark structures((~~.~~))

A. The Director may waive or allow departures from standards for street level development, residential amenity areas, setbacks, ((~~width and depth~~)) floor area ratio limits and screening and landscaping for designated landmark structures or for development within a Landmark District pursuant to Seattle Municipal Code, Title 25 or within a Special Review District pursuant to Seattle Municipal Code, Chapter 23.66.

* * *

Section 11. Section 23.47A.032 of the Seattle Municipal Code, which section was adopted by Ordinance 122311, is amended as follows:

LH COUNCIL CLERK

23.47A.032 Parking location and access((~~.~~))

A. Access to parking((~~.~~))

1. NC zones. The following rules apply in NC zones, except as provided under 23.47A.032.A.2 and 23.47A.032.D ((~~may be permitted under subsection C of this section~~)):

a. Access to parking ((~~must~~)) shall be from the alley if the lot abuts an alley improved to the standards of Section 23.53.030.C, or if the Director determines that alley access is feasible and desirable to mitigate parking access impacts.

b. If ((~~the lot does not abut an improved~~)) access is not provided from an alley and the lot abuts only one street, access is permitted from the street, and limited to one two-way curb cut.

c. If ((~~the lot does not abut an improved~~)) access is not provided from an alley ((~~but~~)) and the lot abuts two or more streets, access ((~~to parking must be from the street with the fewest lineal feet of commercially zoned frontage, except as provided in subsection A2b of this Section~~)) is permitted across one of the side street lot lines as determined through 23.47A.032.C, and curb cuts are permitted pursuant to Section 23.54.030.F.2.a.1).

2. ((~~Pedestrian-Designated Zones. T~~)) In addition to the provisions governing NC zones in 23.47A.032.A.1, the following rules apply in pedestrian-designated zones, except as may be permitted under subsection 23.47A.032.D((~~C of this section~~)):

((~~a. Access to parking shall be from an alley if the lot abuts an alley improved to the standards of Section 23.53.030C.~~

LH COUNCIL CLERK

~~b.~~))a. If ((~~the lot does not abut an improved~~)) access is not provided from an alley ((~~but~~)) and the lot abuts two or more streets, access to parking shall be from a street that is not a principal pedestrian street.

((~~c.~~))b. If ((~~the lot does not abut an improved alley,~~)) access is not provided from an alley and the lot abuts only a principal pedestrian street or streets, access is permitted from the principal pedestrian street, and limited to one two-way curb cut.

3. ((~~C1 and C2 zones.~~))In C1 and C2 zones, access to off-street parking may be from a street, alley, or both when the lot abuts an alley. However, structures in C zones with residential uses and structures in C zones across the street from residential zones ((~~must~~)) shall meet the requirements for parking access for NC zones as provided in subsection 23.47A.032.A.1.

B. Location of parking.

1. ((~~NC Zones.~~)) The following rules apply in NC zones, except as provided in subsection((~~s~~)) 23.47A.032.D ((~~subsection B2 of this section or as may be permitted under subsection ((C)) of this section~~)).

a. Parking ((~~may~~)) shall not be located between a structure and a street lot line (Exhibit A for 23.47A.032((~~A~~))).

b. Within a structure, street-level parking shall be separated from street-level, street-facing façades by another permitted use. ((~~Parking may not be located inside a structure adjacent to a street-level street-facing façade according to Section 23.47A.005C.~~)) This

COUNCIL CLERK

requirement ((~~shall~~)) does not apply to access to parking meeting the standards of subsection 23.47A.032.A ((~~1, above~~)).

c. Parking to the side of a structure shall not exceed ((~~sixty (60)~~)) 60 feet of ((~~lineal~~)) street frontage (Exhibit B for 23.47A.032((~~B~~))).

d. Required ((~~P~~))parking ((~~may~~)) shall be located ((~~within~~)) no farther than ((~~eight hundred (~~))800((~~)~~)) feet ((~~of~~)) from the lot with the use to which it is accessory, and shall comply with ((~~according to~~)) the provisions of 23.54.025, Parking Covenants.

2. ((~~Pedestrian-designated Zones. The following rules apply i~~)) In pedestrian designated zones, surface parking is prohibited abutting the street lot line along a principal pedestrian street.

((~~a. Parking may not be located between a structure and a street lot line.~~

~~b. Parking may not be located inside a structure at street level along a principal pedestrian street. This requirement shall not apply to access to parking meeting the standards of subsection A2, above.~~

~~c. Parking may be located at the rear of a structure, ((or may))be built into or under a structure, or be located within eight hundred (800) feet of the lot with the use to which it is accessory, according to the provisions of Section 23.54.025, Parking covenants.~~))

3. ((~~C1 and C2 zones.~~)) Off-street parking may ((~~generally~~)) be located anywhere on a lot in C1 and C2 zones((~~. However~~)), except that structures with residential uses in C zones and structures in C zones across the street from residential zones ((~~must~~)) shall meet the requirements for parking location for NC zones as provided in subsection 23.47A.032.B.1.

LH COUNCIL CLERK

C. When a lot fronts on two or more streets, the Director will determine which of the streets will be considered the front lot line, for purposes of this section only. In making a determination, the Director will consider the following criteria:

1. The extent to which each street's pedestrian-oriented character or commercial continuity would be disrupted by curb cuts, driveways or parking adjacent to the street;

2. The potential for pedestrian and automobile conflicts; and

3. The relative traffic capacity of each street as an indicator of the street's role as a principal commercial street.

((~~C~~))D. Exceptions to parking location and access requirements.

1. Access to off-street parking may be from a street when, due to the relationship of an alley to the street system, use of the alley for parking access would create a significant safety hazard as determined by the Director ((~~as a Type I Master Use Permit decision~~)).

2. If a lot borders an unopened right-of-way, the Director may apply the parking access and location requirements as if that street did not border the lot if, after consultation with the Director of Transportation, the Director determines that the street is unlikely to be opened or improved. ((~~When a lot fronts on two or more streets on which the lineal feet of commercially zoned frontage are equal, the Director will determine the front lot line for the purposes of location of parking and may allow parking between a building and the street. In making a determination, the Director will consider the following criteria:~~

~~a. The extent to which parking along a street would disrupt an established commercial street's pedestrian-oriented character or commercial continuity;~~

LH COUNCIL CLERK

~~b. The potential for pedestrian and automobile conflicts;~~

~~c. The relative traffic capacity of a street as an indicator of a street's role as a principal commercial street.~~))

3. On waterfront lots in the Shoreline District, parking may be located between the structure and the front lot line, if necessary to prevent blockage of view corridors or to keep parking away from the edge of the water as required by the Shoreline Master Program.

E. When an existing building is proposed to be expanded, the Director shall determine the location of parking and access with the goal of minimizing the impact of parking and access along the front lot line.

((~~D~~))F. ((~~Direct access to a loading berth from a street is permitted only when no alley improved to the standards of Section 23.53.030C is available for access.~~)) Access to a loading berth shall be from the alley if the lot abuts an alley improved to the standards of subsection 23.53.030.C, or if the Director determines that alley access is feasible and desirable to mitigate right-of-way impacts.

((~~E~~))G. Parking ((~~must~~)) shall be screened according to the provisions of Section 23.47A.016.

((~~F~~))H. Surface Parking.

1. Pedestrian access through surface parking areas. Where a pedestrian entrance to one or more general sales and service or major durables retail sales uses greater in the aggregate than 30,000 square feet is oriented to a parking lot, a ((~~five (5)~~)) 5-foot-wide pedestrian walkway

LH COUNCIL CLERK

through the parking lot to the pedestrian entrance ((~~must~~)) shall be provided for each 50 spaces of parking provided.

2. Surface parking separating the building from the street. Where a pedestrian entrance to one or more general sales and service or major durables retail sales uses greater in the aggregate than 30,000 square feet is oriented to a surface parking area separating a building from a street, at least one ((~~five (5)~~)) 5-foot-wide pedestrian walkway from the street to the pedestrian entrance ((~~must~~)) shall be provided.

Section 12. Chart A of Section 23.50.012 of the Seattle Municipal Code, which section was last amended by Ordinance 122411, is amended as follows:

23.50.012 Permitted and prohibited uses((~~.~~))

* * *

Chart A For Section 23.50.012 Uses in Industrial Zones					
	PERMITTED AND PROHIBITED USES BY ZONE				
USES	**IB**	**IC**	**IG1 and IG2 (general)**	**IG1 in the Duwamish M/I Center**	**IG2 in the Duwamish M/I Center**
* * *					
E. INSTITUTIONS					
* * *					
E.13. Schools, elementary or secondary	((~~P~~))EB	((~~P~~))EB	((~~P~~))EB	((~~P~~))X	((~~P~~))X
* * *					
M. UTILITY USES					
M.1. Communication Utilities, major	CU	CU	CU	CU	CU
* * *					
M.5. Sewage Treatment Plants	X	((~~X~~))CCU	((~~X~~))CCU	((~~X~~))CCU	((~~X~~))CCU

* * *

LEG COUNCIL CLERK

Section 13. Subsections B, D, and G, and Charts A and B of Section 23.54.015 of the Seattle Municipal Code, which section was last amended by Ordinance 122670, are amended as follows:

23.54.015 Required parking((~~.~~))

* * *

B. Exceptions to Required Parking.

1. Parking in downtown zones is regulated by Section 23.49.019 and not by this section;

2. No parking for motor vehicles is required for uses in commercial zones in urban centers ((~~and~~)) <u>or in commercial zones</u> in the Station Area Overlay District, except that parking for fleet vehicles is required;

3. Parking for major institution uses is regulated by Section 23.54.016 and not by this Section;

4. Parking for motor vehicles for uses located in the Northgate Overlay District is regulated by Section 23.71.016 and not by this Section; and

5. No parking is required for business establishments permitted in multifamily zones.

* * *

D. Parking waivers for nonresidential uses.

LH COUNCIL CLERK

* * *

3. In all other zones, no parking is required for the first ((~~two thousand five hundred (2,500)~~)) 2,500 square feet of gross floor area of nonresidential uses in a structure, except for the following:

a. structures or portions of structures occupied by restaurants with drive-in lanes,

b. motion picture theaters,

c. offices, or

d. institutional uses, including Major ((~~i~~))Institution uses.

When two or more uses with different parking ratios occupy a structure, the ((~~twenty-five thousand (2,500)~~)) 2,500 square foot waiver is prorated based on the area occupied by the nonresidential uses for which the parking waiver is permitted.

* * *

G. New nonresidential uses in existing structures in commercial and industrial zones. Up to ((~~twenty (20)~~)) 20 required parking spaces are waived for a new nonresidential use established in an existing structure or the expansion of an existing nonresidential use entirely within an existing structure. For purposes of this section, "existing structure" means a structure that was established under permit, or for which a building permit has been granted and has not expired, at least two ((~~(2)~~))years prior to the application to establish the new use or expand the use.

LH COUNCIL CLERK

* * *

Chart A
for Section 23.54.015
PARKING FOR NONRESIDENTIAL USES OTHER THAN INSTITUTIONS

Use				Minimum parking required
A.	AGRICULTURAL USES			1 space for each 2,000 square feet
B.	COMMERCIAL USES			
	B.1.	Animal shelters and kennels		1 space for each 2,000 square feet
	B.2.	Eating and drinking establishments		1 space for each 250 square feet
	B.3.	Entertainment Uses, general, except as noted below (1)		For public assembly areas: 1 space for each 8 fixed seats, or 1 space for each 100 square feet of public assembly area not containing fixed seats;
		B.3.a	Adult Cabarets	1 space for each 250 square feet
		B.3.b	Sports and recreation uses	1 space for each 500 square feet
	B.4.	Food processing and craft work		1 space for each 2,000 square feet
	B.5.	Laboratories, research and development		1 space for each 1,500 square feet
	B.6.	Lodging uses		1 space for each 4 rooms; For bed and breakfast facilities in single family and multifamily zones, 1 space for each dwelling unit, plus 1 space for each 2 guest rooms
	B.7.	Medical services		1 space for each 500 square feet
	B.8.	Offices		1 space for each 1,000 square feet
	B.9.	Sales and services, automotive		1 space for each 2,000 square feet
	B.10.	Sales and services, general, except as noted below		1 space for each 500 square feet
		B.10.a.	Pet Daycare Centers (2)	1 space for each 10 animals or 1 space for each staff member, which ever is greater; plus 1 loading and unloading space for each 20 animals
	B.11.	Sales and services, heavy		1 space for each 2,000 square feet
	B.12.	Sales and services, marine		1 space for each 2,000 square feet
C.	HIGH IMPACT USES			1 space for each 2,000 square feet

Chart A
for Section 23.54.015
PARKING FOR NONRESIDENTIAL USES OTHER THAN INSTITUTIONS

D.	LIVE-WORK UNITS	0 spaces for units with 1,500 square feet or less; 1 space for each unit greater than 1,500 square feet; ((~~, plus if the unit exceeds 2,500 square feet, the parking requirement for the use most similar to the nonresidential space~~)) 1 space for each unit greater than 2,500 square feet, plus the parking that would be required for any nonresidential activity classified as a principal use

***

(1) Required parking for spectator sports facilities or exhibition halls must be available when the facility or exhibition hall is in use. A facility shall be considered to be "in use" during the period beginning three ((~~(3)~~)) hours before an event is scheduled to begin and ending one ((~~(1)~~)) hour after a scheduled event is expected to end. For sports events of variable or uncertain duration, the expected event length shall be the average length of the events of the same type for which the most recent data are available, provided it is within the past five ((~~(5)~~)) years. During an inaugural season, or for nonrecurring events, the best available good faith estimate of event duration will be used. A facility will not be deemed to be "in use" by virtue of the fact that administrative or maintenance personnel are present. The Director may reduce the required parking for any event when projected attendance for a spectator sports facility is certified to be ((~~fifty (50)~~)) 50 percent or less of the facility's seating capacity, to an amount not less than that required for the certified projected attendance, at the rate of one ((~~(1)~~)) space for each ten ((~~(10)~~)) fixed seats of certified projected attendance. An application for reduction and the certification shall be submitted to the Director at least ((~~fifteen (15)~~)) 15 days prior to the event. When the event is one of a series of similar events, such certification may be submitted for the entire series ((~~fifteen (15)~~)) 15 days prior to the first event in the series. If the Director finds that a certification of projected attendance of ((~~fifty (50)~~)) 50 percent or less of the seating capacity is based on satisfactory evidence such as past attendance at similar events or advance ticket sales, the Director shall, within ((~~fifteen (15)~~)) 15 days of such submittal, notify the facility operator that a reduced parking requirement has been approved, with any conditions deemed appropriate by the Director to ensure adequacy of parking if expected attendance should change. The parking requirement reduction may be applied for only if the goals of the facility's Transportation Management Plan are otherwise being met. The Director may revoke or modify a parking requirement reduction approval during a series, if projected attendance is exceeded.

(2) The amount of required parking is calculated based on the maximum number of

LH COUNCIL CLERK

Chart A for Section 23.54.015 PARKING FOR NONRESIDENTIAL USES OTHER THAN INSTITUTIONS
staff or animals the center is designed to accommodate.

Chart B for Section 23.54.015 PARKING FOR RESIDENTIAL USES		
Use		**Minimum parking required**
A. General Residential Uses		
***		
H.	Multifamily structures, except as provided in Sections B or C of this chart(1) (((~~(2)~~)))	Lots containing: 2--10 dwelling units: 1.1 spaces for each dwelling unit 11--30 dwelling units: 1.15 spaces for each dwelling unit 31--60 dwelling units: 1.2 spaces for each dwelling unit More than 60 dwelling units: 1.25 spaces for each dwelling unit In addition, for all multifamily structures whose average gross floor area per dwelling unit, excluding decks and all portions of a structure shared by multiple dwelling units, exceeds 500 square feet, an additional .0002 spaces per square foot in excess of 500 shall be required up to a maximum additional .15 spaces per dwelling unit; and When at least 50 percent of the dwelling units in a multifamily structure have 3 bedrooms, an additional .25 spaces per bedroom for each unit with 3 bedrooms; and When a multifamily structure contains a dwelling unit with 4 or more bedrooms, an additional .25 spaces per bedroom for each unit with 4 or more bedrooms

Chart B for Section 23.54.015 PARKING FOR RESIDENTIAL USES		
I.	Nursing homes(2) (((~~3~~)))	1 space for each 2 staff doctors; plus 1 additional space for each 3 employees; plus 1 space for each 6 beds
* * *		
C. Multifamily Requirements with Income Criteria or Location Criteria and Income Criteria		
S.	Multifamily structures located in multifamily zones in the Capitol Hill, First Hill, Pike/Pine, South Lake Union, 12th Avenue and Uptown Urban Center Villages: for each dwelling unit rented to and occupied by a household with an income at time of its initial occupancy at or below 30 percent of the median income (((~~4~~))) (3), for the life of the building (1)	0.33 space for each dwelling unit with 2 or fewer bedrooms, and 0.5 space for each dwelling unit with 3 or more bedrooms
T.	Multifamily structures located in multifamily zones in the Capitol Hill, South Lake Union, 12th Avenue and Uptown Urban Center Villages: for each dwelling unit rented to and occupied by a household with an income at time of its initial occupancy of between 30 and 50 percent of the median income (((~~4~~))) (3), for the life of the building (1)	0.5 space for each dwelling unit with 2 or fewer bedrooms, and 1 space for each dwelling unit with 3 or more bedrooms
U.	Multifamily structures ((~~located outside of commercial zones in urban centers~~)): for each dwelling unit rented to and occupied by a household with an income at time of its initial occupancy at or below 30 percent of the median income (((~~4~~))) (3), for the life of the building (1)	0.33 space for each dwelling unit with 2 or fewer bedrooms, and 1 space for each dwelling unit with 3 or more bedrooms
V.	Multifamily structures ((~~located outside of commercial zones in urban centers~~)): for each dwelling unit with 2 or fewer bedrooms rented to and occupied by a household with an income at time of its initial occupancy of between 30 and 50	0.75 spaces for each dwelling unit

Chart B for Section 23.54.015 PARKING FOR RESIDENTIAL USES		
	percent of the median income (((~~(4)~~)) (3), for the life of the building (1)	
W.	Low-income elderly multifamily structures (1) (((~~(4)~~)) (3)	1 space for each 6 dwelling units
X.	Low-income disabled multifamily structures (1) (((~~(4)~~)) (3)	1 space for each 4 dwelling units
Y.	Low-income elderly/low-income disabled multifamily structures (1) (((~~(4)~~)) (3)	1 space for each 5 dwelling units
(1) The general requirements of line H of Chart B for multifamily structures are superseded to the extent that a use, structure or development qualifies for either a greater or a lesser parking requirement under any other multifamily provision. To the extent that a multifamily structure fits within more than one line in Chart B, the least of the applicable parking requirements applies, except that if an applicable parking requirement in section B of Chart B requires more parking than line H, the parking requirement in line H does not apply. The different parking requirements listed for certain categories of multifamily structures shall not be construed to create separate uses for purposes of any requirements related to establishing or changing a use under this Title.		
(((~~(2) Parking spaces required for multifamily structures may be provided as "tandem parking" spaces according to subsection B of Section 23.54.020.~~))		
(((~~(3)~~)) (2) For development within single-family zones the Director may waive some or all of the parking requirements according to Section 23.44.015.		
(((~~(4)~~)) (3) Notice of Income Restrictions. Prior to issuance of any permit to establish, construct or modify any use or structure, or to reduce any parking accessory to a multifamily use or structure, if the applicant relies upon these reduced parking requirements, the applicant shall record in the King County Office of Records and Elections a declaration signed and acknowledged by the owner(s), in a form prescribed by the Director, which shall identify the subject property by legal description, and shall acknowledge and provide notice to any prospective purchasers that specific income limits are a condition for maintaining the reduced parking requirement.		

Section 14. Subsection F of Section 23.54.020 of the Seattle Municipal Code, which section was last amended by Ordinance 122738, is amended as follows:

23.54.020 Parking quantity exceptions((~~.~~))

* * *

LH COUNCIL CLERK

F. Reductions to Minimum Parking Requirements ((~~for Nonresidential Uses~~)).

1. Reductions to minimum parking requirements permitted by this subsection will be calculated from the minimum parking requirements in Section 23.54.015. Total reductions to required parking as provided in this subsection may not exceed ((~~forty (40)~~)) 40 percent.

2. Transit Reduction.

a. In NC zones and C zones, except pedestrian-designated zones, and in the Seattle Mixed (SM) zone, except on Class 1 Pedestrian Streets, the minimum parking requirement for a nonresidential use, except institutions, may be reduced by ((~~twenty (20)~~)) 20 percent when the use is located within ((~~eight hundred (800)~~)) 800 feet of a street with midday transit service headways of ((~~fifteen (15)~~)) 15 minutes or less in each direction. This distance will be the walking distance measured from the nearest bus stop to the property line of the lot containing the use.

b. In NC, C and SM zones, any minimum parking requirement for a residential use may be reduced by 20 percent when the use is located within 800 feet of a street with midday transit service headways of 15 minutes or less in each direction. This distance will be the walking distance measured from the nearest bus stop to the property line of the lot containing the use.

((~~b.~~)) c. In industrial zones, the minimum parking requirement for a nonresidential use may be reduced by ((~~fifteen (15)~~)) 15 percent when the use is located within ((~~eight hundred (800)~~)) 800 feet of a street with peak transit service headways of ((~~fifteen (15)~~))

COUNCIL CLERK

15 minutes or less in each direction. This distance will be the walking distance measured from the nearest bus stop to the property line of the lot containing the use.

3. ((~~Substitution of Alternative Transportation.~~))For new or expanding offices or manufacturing uses that require ((~~forty (40)~~)) 40 or more parking spaces, the minimum parking requirement may be reduced up to a maximum of ((~~forty (40)~~)) 40 percent by the substitution of alternative transportation programs, according to the following provisions:

a. For every certified carpool space accompanied by a cash fee, performance bond or alternative guarantee acceptable to the Director, the total parking requirement will be reduced by ((~~one and nine-tenths (1 9/10)~~)) 1.9 spaces, up to a maximum of ((~~forty (40)~~)) 40 percent of the parking requirement. The Director will consult with the Seattle Rideshare Office in certifying carpool spaces and the location of carpool parking.

b. For every certified vanpool purchased or leased by the applicant for employee use, or equivalent cash fee for purchase of a van by the public ridesharing agency, the total parking requirement will be reduced by six ((~~(6)~~)) spaces, up to a maximum of ((~~twenty (20)~~)) 20 percent of the parking requirement. Before a certificate of occupancy may be issued, details of the vanpool program shall be specified in a Memorandum of Agreement executed between the proponent, the Director, and the Seattle Rideshare Office.

c. If transit or transportation passes are provided with a ((~~fifty (50)~~)) 50 percent or greater cost reduction to all employees in a proposed structure for the duration of the business establishment(s) within it, or five((~~(5)~~)) years, whichever is less, and if transit service is located within ((~~eight hundred (800)~~)) 800 feet, the parking requirement shall be reduced by ((~~ten~~

L.H. COUNTY CLERK

~~(10)~~)) 10 percent. With a ((~~twenty-five (25)~~)) 25 percent to ((~~forty-nine (49)~~)) 49 percent cost reduction, and if transit service is located within ((~~eight hundred (800)~~)) 800 feet, the parking requirement shall be reduced by ((~~five (5)~~)) 5 percent.

d. For every four ((~~(4)~~)) covered bicycle parking spaces provided, the total parking requirement shall be reduced by one ((~~(1)~~)) space, up to a maximum of ((~~five (5)~~)) 5 percent of the parking requirement, provided that there is access to an arterial over improved streets.

* * *

Section 15. Subsection F of Section 23.54.030 of the Seattle Municipal Code, which section was last amended by Ordinance 122311, is amended as follows:

23.54.030 Parking space standards

* * *

F. ((~~Curb cuts.~~)) The number of permitted ((~~C~~))curb cuts ((~~requirements~~)) shall be determined by whether the parking served by the curb cut is for residential or nonresidential use, and by the zone in which the use is located. When a curb cut is used for more than one ((~~(1)~~)) use or for one ((~~(1)~~)) or more live-work units, the requirements for the use with the largest curb cut requirements ((~~shall~~)) apply.

1. Residential uses in single-family and multifamily zones and residential structures in all other zones.

a. For lots not located on a principal arterial as designated on Exhibit A for 23.53.015((~~A~~)), curb cuts are permitted ((~~according to the following chart~~)) as follows:

LH COUNCIL CLERK

Street or Easement Frontage of the Lot	Number of Curb Cuts Permitted
0 -- 80 feet	1
81 -- 160 feet	2
161 -- 240 feet	3
241 -- 320 feet	4

For lots with frontage in excess of ((~~three hundred twenty (320)~~)) 320 feet, this pattern continues((~~the pattern established in the chart is continued~~)).

b. Curb cuts ((~~must~~)) shall not exceed a maximum width of ((~~ten (10)~~))10 feet except that:

((~~(~~))1) One ((~~(1)~~)) curb cut greater than ((~~ten (10)~~)) 10 feet but in no case greater than ((~~twenty (20)~~)) 20 feet in width may be substituted for each two ((~~(2)~~)) curb cuts permitted by subsection 23.54.030.F.1.a; and

((~~(~~))2) A greater width may be specifically permitted by the development standards in a zone; and

((~~(~~))3) When subsection D of Section 23.54.030 requires a driveway greater than ((~~ten (10)~~)) 10 feet in width, the curb cut may be as wide as the required width of the driveway.

c. For lots on principal arterials designated on Exhibit A for 23.53.015((~~A~~)), curb cuts of a maximum width of ((~~twenty-three (23)~~)) 23 feet are be permitted ((~~according to the following chart~~)) as follows:

LH COUNCIL CLERK

Street Frontage Of the Lot	Number of Curb Cuts Permitted
0 -- 160 feet	1
161 -- 320 feet	2
321 -- 480 feet	3

For lots with street frontage in excess of ((~~four hundred eighty (480)~~)) 480 feet, this pattern continues((~~the pattern established in the chart is continued~~)).

d. There must be at least ((~~thirty (30)~~)) 30 feet between any two (((~~2~~))) curb cuts located on a lot.

e. A curb cut may be less than the maximum width permitted but shall be at least as wide as the minimum required width of the driveway it serves.

f. Where two (((~~2~~))) adjoining lots share a common driveway according to the provisions of Section 23.54.030.D.1, the combined frontage of the two (((~~2~~))) lots ((~~will~~)) shall be considered one (((~~1~~))) in determining the maximum number of permitted curb cuts.

2. Nonresidential uses in single-family and multifamily zones, and in all other zones except industrial zones, all uses except residential structures.

a. Number of curb cuts.

((~~f~~))1) In RC((~~, NC1, NC2 and NC3~~)) zones and within Major Institution Overlay Districts, two-way curb cuts are permitted ((~~according to the following chart~~)) as follows:

LH COUNCIL CLERK

Street Frontage of the Lot	Number of Curb Cuts Permitted
0--80 feet	1
81--240 feet	2
241--360 feet	3
361--480 feet	4

For lots with frontage in excess of ((~~four hundred eighty (480)~~)) 480 feet, this pattern continues((~~the pattern established in the chart is continued~~)). The Director may allow two ((~~(2)~~)) one-way curb cuts to be substituted for one ((~~(1)~~)) two-way curb cut, after determining that there would not be a significant conflict with pedestrian traffic.

((~~(~~))2) ((~~In C1 and C2 zones and the SM zone, the Director will review and make a recommendation on~~)) The Director shall determine the number and location of curb cuts in C1, C2, and SM zones.

((~~(~~))3) In downtown zones, a maximum of two ((~~(2)~~)) curb cuts for one((~~(1)~~))-way traffic at least ((~~forty (40)~~)) 40 feet apart, or one ((~~(1)~~)) curb cut for two-((~~(2)~~)) way traffic, shall be permitted on each street front where access is permitted by Section 23.49.019.H. No curb cut shall be located within ((~~forty (40)~~)) 40 feet of an intersection. These standards may be modified by the Director as a Type I Master Use Permit decision on lots with steep slopes or other special conditions, to the minimum extent necessary to provide vehicular and pedestrian safety and facilitate a smooth flow of traffic.

((~~(~~))4) For public schools, the Director shall permit the minimum number of curb cuts that he or she determines to be necessary.

LH COUNCIL CLERK

5) In NC zones, curb cuts shall be provided according to subsection 23.47A.032.A, or when 23.47A.032.A does not specify the maximum number of curb cuts, according to subsection 23.54.030.F.2.a.1).

* * *

Section 16. Subsection C of section 23.66.140 of the Seattle Municipal Code, which section was last amended by Ordinance 122605, is amended as follows:

23.66.140 Height((~~.~~))

* * *

C. Rooftop Features and additions to structures. The height limits established for the rooftop features described in this subsection may be increased by the average height of the existing street parapet or a historically substantiated reconstructed parapet on the building on which the rooftop feature is proposed. The setbacks required for rooftop features may be modified by the Department of Neighborhoods Director, after a sight line review by the Preservation Board to ensure that the features are minimally visible from public streets and parks within ((~~three hundred (300)~~)) 300 feet of the structure.

* * *

10. Enclosed Rooftop Common Recreation Areas for New Structures.

a. When included on new structures, enclosed rooftop common recreation areas and solar collectors incorporated into those areas and required under this subsection may exceed the maximum height limit by up to ((~~(15)~~)) 15 feet. The structure must include solar collectors that provide ((~~two~~)) 2 percent ((~~(2%)~~)) or more of the structure's total electrical energy

COUNCIL CLERK

consumption and the structure must meet a ((~~green area factor~~)) Green Factor requirement of 0.30 or greater, as determined under Section 23.86.019((~~23.47A.016~~)). Each enclosed rooftop common recreation area must include interpretive signage explaining the sustainable features employed on the structure where that area is located. No commercial, residential or industrial use may be established within enclosed common recreation areas allowed to exceed the maximum height limit under this subsection.

* * *

Section 17. Subsection C of Section 23.74.010 of the Seattle Municipal Code, which section was last amended by Ordinance 122311, is amended as follows:

23.74.010 Development standards((~~.~~))

* * *

C. The following development standards apply to each use and structure, except spectator sports facilities, to the extent that the use or structure either is on a lot fronting on Railroad Way South, 1st Avenue South, South Holgate between 1st Avenue South and Occidental Avenue South, or Occidental Avenue South, or is within a ((~~forty (40)~~)) 40 foot radius measured from any of the block corners of 1st Avenue South or Occidental Avenue South intersecting with the following streets: Railroad Way South, South Royal Brougham, South Atlantic, South Massachusetts, South Holgate and any other streets intersecting with 1st Avenue or Occidental Avenue South that may be established between South Holgate Street and Railroad Way South, as depicted in Exhibit A for 23.74.010((~~A~~)). Railroad Way South, First Avenue South, South Holgate Street and Occidental Avenue South within the Stadium Transition

LH COUNCIL CLERK

Overlay District, and all street areas within a ((~~forty (40)~~)) 40 foot radius of any of those block corners described above, are referred to in this section as the "pedestrian environment," except that in applying this section to a through lot abutting on Occidental Avenue South and on 1st Avenue South, Occidental Avenue South is not considered part of the pedestrian environment.

* * *

3. Screening and Landscaping. The requirements of Sections 23.50.016, 23.50.034, and 23.50.038, including requirements contingent on location near a commercial zone, apply to all new uses and structures. Requirements in Section 23.50.038 contingent on location near a residential lot do not apply. In addition, the screening and landscaping requirements for outdoor storage in ((~~subsections l, m and n of~~)) subsection 23.47A.016.D.2 apply, with respect to street lot lines abutting the pedestrian environment, to the following uses, where a principal or accessory use is located outdoors: outdoor storage (except for outdoor storage associated with florists and horticultural uses), sales and rental of motorized vehicles, towing services, sales and rental of large boats, dry boat storage, heavy commercial sales except fuel sales, heavy commercial services, outdoor sports and recreation, wholesale showrooms, mini-warehouse, warehouse, transportation facilities except rail transit facilities, utilities (except for utility service uses), and light and general manufacturing.

* * *

Section 18. Section 23.84A.004 of the Seattle Municipal Code, which section was last amended by Ordinance 122311, is amended as follows:

23.84A.004 "B."

LEG COUNCIL CLERK

* * *

"Bioretention facility" means a landscaped area that receives rainwater from surrounding areas and uses plants and soils to slow, filter and infiltrate stormwater runoff. Bioretention facilities include but are not limited to rain or rainwater gardens, bioretention planters, and linear cells or swales.

* * *

Section 19. Section 23.84A.014 of the Seattle Municipal Code, which section was adopted by Ordinance 122311, is amended as follows:

23.84A.014 "G."

* * *

"Green ((~~area f~~))Factor" means a scoring system for required landscaping, as described in Section 23.86.019. ((~~means a number determined under Section 23.47A.016.~~))

* * *

Section 20. Section 23.84A.032 of the Seattle Municipal Code, which section was adopted by Ordinance 122311, is amended as follows:

23.84A.032 "R."

"Rain garden" see "bioretention facilities" ((~~means a landscaped area designed with soils and plantings to intercept rainwater in order to slow stormwater runoff.~~))

* * *

Section 21. Section 23.84A.036 of the Seattle Municipal Code, which section was adopted by Ordinance 122311, is amended as follows:

LH COUNCIL CLERK

23.84A.036 "S."

* * *

"Shrub, large" means a shrub normally expected to be equal to or taller than ((~~three (3)~~)) 2 feet at maturity.

* * *

"Soil, structural" means a soil mix or equivalent structure approved by the Director that is engineered to support pavement while allowing healthy root growth.

* * *

"Structural soil." see "Soil, structural."

* * *

Section 22. Section 23.84A.038 of the Seattle Municipal Code, which section was last amended by Ordinance 122611, is amended as follows:

23.84A.038 "T."

* * *

"Tree" means a plant defined as a tree in the Sunset Western Garden Book, 7th Edition, 2001. The size of a tree is identified as follows:

1. "Small tree" means a tree identified as a "small tree" in the Department of Transportation's "Recommended Street Trees and Planting Schedules," or a tree not listed in such schedules that is normally expected to have a spread less than or equal to ((~~fifteen (15)~~)) 15 feet in diameter at maturity.

LH COUNCIL CLERK

2. "Small/medium tree" means a tree identified as a "small/medium tree" in the Department of Transportation's "Recommended Street Trees and Planting Schedules," or a tree not listed in such schedules that is normally expected to have a spread greater than ((~~fifteen (15)~~))15 feet and less than or equal to ((~~twenty (20)~~)) 20 feet in diameter at maturity.

3. "Medium/large tree" means a tree identified as a "medium/large tree" in the Department of Transportation's "Recommended Street Trees and Planting Schedules," or a tree not listed in such schedules that is normally expected to have a spread greater than ((~~twenty (20) feet~~)) 20 and less than or equal to ((~~twenty-five (25)~~)) 25 feet in diameter at maturity.

4. "Large tree" means a tree identified as a "large tree" in the Department of Transportation's "Recommended Street Trees and Planting Schedules," or a tree not listed in such schedules that is normally expected to have a spread greater than ((~~twenty-five (25)~~)) 25 feet in diameter at maturity.

5. "((~~Exceptionally l~~))Large existing tree" means an existing tree with a trunk diameter exceeding ((~~twenty-four~~))6 inches when measured at ((~~four and one-half (4.5)~~)) 4.5 feet above the ground.

* * *

Section 23. Section 23.84A.042 of the Seattle Municipal Code, which section was adopted by Ordinance 122311, is amended as follows:

23.84A.042 "V."

* * *

"Vehicle storage and maintenance" see "Transportation facility."

LH COUNCIL CLERK

* * *

Section 24. A new Section 23.86.019 of the Seattle Municipal Code is adopted to read as follows:

23.86.019 Green Factor

A. Development standards for certain areas require landscaping that meets a minimum Green Factor score. The Green Factor score shall be calculated as follows:

1. Identify all proposed landscape elements, sorted into the categories presented in Table A for Section 23.86.019.

2. Multiply the square feet, or equivalent square footage where applicable, of each landscape element by the multiplier provided for that element in Table A for Section 23.86.019, according to the following provisions:

a. If multiple elements listed on Table A for Section 23.86.019 occupy the same area (for example, groundcover under a tree), count the full square footage or equivalent square footage of each element.

b. Landscaping elements in the right-of-way between the lot line and the roadway may be counted, provided that they are approved by the Director of the Department of Transportation.

c. Elements listed in Table A for Section 23.86.019 that are provided to satisfy any other requirements of this Code may be counted.

d. For trees, large shrubs, and large perennials, use the equivalent square footage of each tree or shrub according to Table B for Section 23.86.019.

LH COUNCIL CLERK

e. For vegetated walls, use the square footage of the portion of the wall covered by vegetation.

f. For all elements other than trees, large shrubs, large perennials, and vegetated walls, square footage is determined by the area of the portion of a horizontal plane that lies over or under the element.

g. All permeable paving and structural soil credits together may not count for more than one third of the Green Factor score for a lot.

3. Add together all the products calculated under subsection 23.86.019.A.2 to determine the Green Factor numerator.

4. Divide the Green Factor numerator by the lot area to determine the Green Factor score.

Table A for Section 23.86.019	
Green Factor Landscape Elements	**Multiplier**
A. Planted Areas (choose one of the following for each planting area)	
1. Planted areas with a soil depth of less than 24 inches	0.1
2. Planted areas with a soil depth of 24 inches or more:	0.6
3. Bioretention facilities meeting standards of the Stormwater Code, Title 22 Subtitle VIII of the Seattle Municipal Code	1.0
B. Plants	
1. Mulch, ground covers or other plants normally expected to be less than 2 feet tall at maturity.	0.1
2. Large shrubs or other perennials at least 2 feet tall at maturity	0.3
3. Small trees	0.3
4. Small/medium trees	0.3
5. Medium/large trees	0.4
6. Large trees	0.4
7. Preservation of existing large trees at least 6 inches in diameter at breast height	0.8
C. Green roofs	
1. Planted over at least 2 inches but less than 4 inches of growth	0.4

LH COUNCIL CLERK

Table A for Section 23.86.019	
Green Factor Landscape Elements	**Multiplier**
medium	
2. Planted over at least 4 inches of growth medium	0.7
D. Vegetated walls	0.7
E. Water features using harvested rainwater and under water at least six months per year	0.7
F. Permeable paving	
1. Installed over at least 6 inches and less than 24 inches of soil and/or gravel	0.2
2. Installed over at least 24 inches of soil and/or gravel	0.5
G. Structural soil	0.2
H. Bonuses applied to Green Factor landscape elements:	
1. Landscaping that consists entirely of drought-tolerant or native plant species	0.1
2. Landscaping that receives at least 50 percent of its irrigation through the use of harvested rainwater	0.2
3. Landscaping visible from adjacent rights-of-way or public open space	0.1
4. Landscaping in food cultivation	0.1

Table B for Section 23.86.019 Equivalent square footage of trees and large shrubs	
Landscape Elements	**Equivalent Square Feet**
Large shrubs or large perennials	16 square feet per plant
Small trees	50 square feet per tree
Small/medium trees	100 square feet per tree
Medium/large trees	150 square feet per tree
Large trees	200 square feet per tree
Existing large trees	15 square feet per inch of trunk diameter 4.5 feet above grade

LH COUNCIL CLERK

Section 25. The provisions of this ordinance are declared to be separate and severable. The invalidity of any clause, sentence, paragraph, sub-division, section or portion of this ordinance, or the invalidity of the application thereof to any person or circumstance shall not affect the validity of the remainder of this ordinance, or the validity of its application to other persons or circumstances.

LH COUNCIL CLERK

Section 26. This ordinance shall take effect and be in force thirty (30) days from and after its approval by the Mayor, but if not approved and returned by the Mayor within ten (10) days after presentation, it shall take effect as provided by Municipal Code Section 1.04.020.

Passed by the City Council the 16th day of March, 2009, and signed by me in open session in authentication of its passage this 16th day of March, 2009.

President Pro Tem of the City Council

Approved by me this ~~16~~ 18th day of March, 2009.

Gregory J. Nickels, Mayor

Filed by me this 19th day of March, 2009.

City Clerk

(Seal)

LH COUNCIL CLERK