Example 3
Elevation Views of Hood System

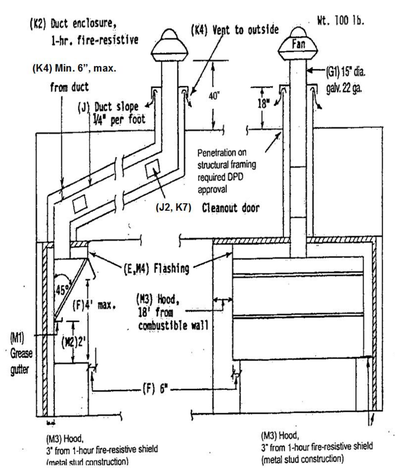

Example 1
Mechanical Plot Plan

1. Identification of adjacent streets, property and alleys.
2. Any easements that cross the property or other pertinent legal features.
3. Property line and property dimension.
4. Location, size and shape of any structure present on site and proposed for construction.
5. A North arrow and scale.
6. Locate and describe the job. Show location of hood, hood exhaust and supply, existing HVAC, and HVAC exhaust and supply.

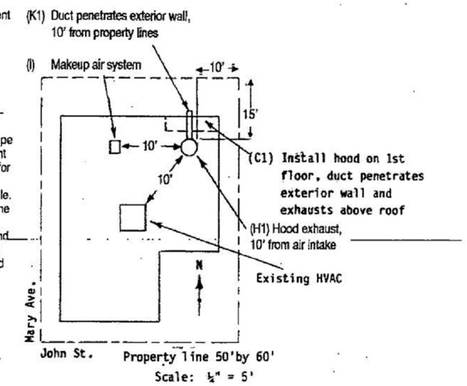

Example 2
Elevation View of Makeup Air System

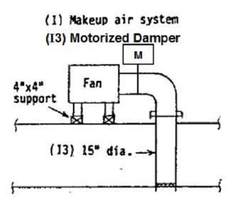

Plan View of Hood System

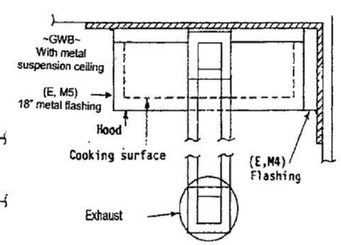

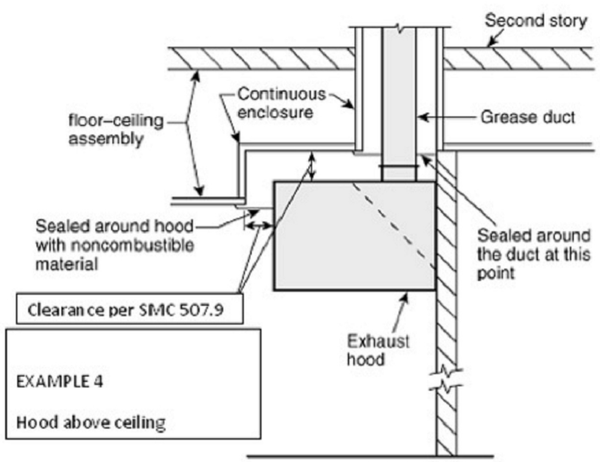

TYPICAL SECTION VIEW

H. **Exhaust outlet location (506.3.13, 506.4.2, 506.5.3)**

	Type I Min. Req.	Type I Proposed	Type II Min. Req.	Type II Proposed
Distance from same or adjacent building	10 ft.	_____ ft..	10 ft.	_____ ft.
Distance above adjoining grade	10 ft.	_____ ft..	10 ft.	_____ ft.
Distance from property line	10 ft.	_____ ft..	10 ft.	_____ ft.
Distance from windows and doors	10 ft.	_____ ft..	3 ft.	_____ ft.
Distance from mechanical air intake	10 ft.	_____ ft..	10 ft.	_____ ft.
Distance of duct above adjoining grade at alley	16 ft.	_____ ft..	16 ft.	_____ ft.
Exhaust outlet shall terminate above roof	40 in.	_____ in.	30 in.	_____ in.
Upblast fan: Ductwork shall extend above roof	18 in.	_____ in.	N/A	
Exhaust outlet terminate at exterior wall	Cleaning equip. per DR 8-2014 or Current D.R. whichever is latest ☐		30 in.	_____ in.

I. **Makeup air (508.1, SCEC C403.2.4.4)**
1. Applicant shall provide makeup air **not less than 90%** of the exhaust. _____ CFM.
2. Makeup air system shall be electrically interlocked with the exhaust system, such that the makeup air system will operate when the exhaust system is in operation.
3. Makeup air shall be provided by a mechanical or gravity means of sufficient capacity. Windows and door openings shall not be used for the purpose of providing makeup air. Motorized damper required at openings.
4. The temperature differential between *makeup air* and the air in the conditioned space shall not exceed 10^{0}F if the amount of *makeup air supply exceeds* 2,500 cfm per space.

Heater model# _____ Input BTU _____ Output BTU _____
Heater CFM _____ AFUE _____

FAN	MOTORIZED DAMPER
Make and model _____ H.P. _____	Recommended air velocity, 500 fpm
Static pressure _____ in. at CFM	
Duct Dimension _____ , area _____ ft.^{2}	Duct area req. = $\frac{\text{cfm}}{500 \text{ fpm}}$ = $\frac{___}{500 \text{ fpm}}$ = _____ ft.^{2}
Air velocity = $\frac{\text{cfm}}{\text{area}}$ = _____ ft.^{3}/M	Duct Dimensions req. = _____
_____ ft.^{2}/M = _____ fpm	Eff. Damper opening _____ X _____ = _____ ft.^{2}

J. **Slope of duct and cleanout access (506.3.7, 506.3.8)**
1. Horizontal duct up to 75' long **Min slope 1/4 in/ft.** Proposed _____ in/ft.
   More than 75' long **Min slope 1 in/ft.** Proposed _____ in/ft.
   Number proposed _____
2. Grease duct horizontal tight-fitting cleanout doors shall be spaced not more than 20 ft. apart, located not more than 10 ft. from changes in direction that are greater than 45 degrees and located at grease reservoirs. Great duct vertical tight-fitting cleanout doors shall be provided minimum one on each floor where grease ducts pass vertically through floors.

K. **Duct enclosure (506.3.11, 506.3.12)**
1. Ducts penetrating a ceiling, wall or floor shall be enclosed in a duct enclosure having fire rating per SBC Table 601 from the point of penetration to the outside air. A duct may only penetrate exterior walls at locations where unprotected openings are permitted by Table 705.8 of the Seattle Building Code.
2. For code compliance purposes, it is acceptable to assume that ducts penetrating concrete, brick or steel ceilings, walls or floors shall require a 2-hour fire-resistive duct enclosure, and for others, it shall be 1 hour.

Type of Construction	Min. Fire-Resistive Const. Of Enclosure	Proposed	Proposed Material and Construciton
IA, IB, IIIA, IIIB	2 hour	_____ hr.	_____
IIA, IIB, IV, VA	1 hour	_____ hr.	_____

3. Duct penetrates Type VB roof/ceiling assembly ONLY, may omit the enclosure per 506.3.11.4.
4. Duct enclosures shall be separated from the duct by **at least 6 in.** per 506.3.11.1 Proposed _____ in.
5. Duct enclosure shall be of **METAL STUD** construction and shall be sealed around the duct at the point of penetration and vented to the exterior through a weather-protected opening.
6. Duct enclosures shall serve only one kitchen exhaust duct.
7. Partial application of a field-applied grease duct enclosure system shall not be installed for the sole purpose of reducing clearances to combustibles at isolated sections of grease duct (506.3.11.2).
8. Tight-fitting hinged access door shall be provided at each cleanout. Access enclosure doors shall have fire-resistance rating equal to the enclosure. An approved sign shall be placed on access door. **"ACCESS PANEL. DO NOT OBSTURCT"**

L. **Multiple hood venting (507.15, 506.3.5)**
1. Number of hoods vented by a single duct system: Proposed: _____
2. Multiple type I hoods are permitted to be combined where **all** of the following conditions are met:
   1. All interconnected hoods are located within the same story.
   2. All interconnected hoods are located within the same room or in adjoining rooms.
   3. Interconnected ducts do not penetrate assemblies required to be fire-resistance rated.
   4. The grease duct system does not serve solid-fuel-fired appliances.
3. A hood outlet shall serve not more than a 12-foot section of hood.

M. **Additional information for Type 1 hood only (507):**
1. Grease filters shall be installed at minimum 45 degree angle and Equipped with drip tray and gutter beneath lower edge of filters. (507.11.2) Proposed: _____ Degrees
2. Distance between lowest edge of grease filters and cooking surface of:
   Grill, fryer, exposed flame shall be **not less than 2 ft.** Proposed: _____ ft.
   Exposed charcoal, charbroil shall be **not less than 3 1/2 ft.** (507.11) Proposed: _____ ft.
3. Type I hood and duct shall have clearances from combustible construction of: Proposed: _____ in.
   GWB on metal stud (minimum 3" clearance required) (506.3.6, 507.9)
   GWB on wood stud (minimum 18" clearance required)

UNPROTECTED	PROTECTED With 1-hour Fire-Rated Material and Metal Stud Construction
Hood Min. Req. 18 in. Proposed _____ in.	Min. req. 3 in. Proposed _____ in.
Duct Min. Req. 18 in. Proposed _____ in.	Min. req. 3 in. Proposed _____ in.

4. Flashing provided ☐ **Yes** ☐ **No** Distance from ceiling _____ in., wall _____ in.
   Type I hoods or portions thereof penetrating a ceiling, wall or furred space shall comply with Section 506.3.11. Field-applied grease duct enclosure systems, as addressed in Section 506.3.11.2, shall **not** be utilized to satisfy the requirements of this section (507.10).
5. All joints and seams shall be made with continuous liquid-tight weld or braze made on the external surface of duct system. Vibration insulation connector may be used provided it consists of noncombustible packing in a metal sleeve joint. (506.3.2, 507.7)
6. Exhaust fans used for discharging grease exhaust shall be positioned so that the discharge will not impinge on the roof. The fan shall be provided with an adequate drain opening at the lowest point to permit drainage of grease to a suitable collection device. (506.5.2)
7. Fire Suppression System. Fire Suppression System shall be per Seattle Fire Code. Portable fire extinguisher shall also be provided per Seattle Fire Code. Fire Department phone number 206-386-1450. (509.1)
8. Performance test certificate of the hood system shall be provided to owner before final approval. Test shall verify proper operation, the rate of exhaust, makeup air, capture, and containment performance of the exhaust at normal operating conditions. (507.16). All grease duct shall be tested to ensure welding and brazed joints are liquid tight. (506.3.2.5)

Commercial Kitchen Hood application shall include exhaust fan, duct, hood, and make-up air system in one permit application.

References:
1) Seattle Mechanical Code 2012
2) Director's Rule 6-2005
3) Seattle Building Code 2012
4) Seattle Fire Code 2012
5) Seattle Commercial Energy Code 2012

This worksheet must be submitted with commercial kitchen range hood permit applications. It explains and organizes information needed by the Department of Planning and Development (DPD) to efficiently review plans and issue permits. DPD will use it to verify code compliance.

A. **All new cooking appliance and new dishwasher shall be Energy Star labeled per SCEC C403.8** ☐ Yes ☐ No

B. **Established use and history of building** ☐ Yes ☐ No
Is it an existing restaurant, food processing area or food service area:

If no, provide construction or change of use permit number: _____

C. **Location of exterior ductwork and mechanical equipment**
1. Is ductwork or mechanical equipment located outside of building other than roof top? ☐ Yes ☐ No
2. Applicant shall provide plan and elevation views showing ductwork, duct enclosure, hood, cooking surface air supply, exhaust system, and equipment support including structural detail (See attached examples 1, 2, and 3).

D. **Type of Hood**
1. For grease and smoke removal:
   (Example: deep fryer, charbroilers, grill, roasting ovens larger than 6 KW and all solid-fuel appliances. Type I _____ Quantity
2. For steam, vapor, heat or odor removal:
   (Example: steamer, pastry, and pizza oven)
   Hood shall have a permanent, visible label identifying it as a Type II hood. Type II _____ Quantity
3. Is hood for solid-fuel cooking equipment?
   If yes, a separate exhaust system is required. ☐ Yes ☐ No

E. **Type of material and gauge (SMC 506.3.1.1, 507.4, 507.5. 507.9)**

Component	Type of Material	Type I HOOD Gauge Min.Req.	Type I HOOD Gauge Proposed	Type II Hood Gauge Minimum Req.	Type II Hood Gauge Proposed
Duct and Plenum	Stainless Steel	18 Ga.	_____ Ga.	26 Ga. Up to 12" Diameter	_____ Ga.
	Steel	16 Ga.	_____ Ga.	22 Ga. Up to 30" Diameter	_____ Ga.
Hood	Stainless Steel	20 Ga.	_____ Ga.	24 Ga.	_____ Ga.
	Steel	18 Ga.	_____ Ga.	22 Ga.	_____ Ga.
Flashing	Stainless Steel	22 Ga.	_____ Ga.		
	Steel	22 Ga.	_____ Ga.	NOT REQUIRED	

F. **Quantity of air exhausted through the hood (507.12, 507.13)**
1. Canopy hoods are hoods that extend a minimum 6" beyond cooking surface.
   Type of hood proposed: ☐ Canopy ☐ Non-canopy
   Distance lip of hood and cooking surface: Proposed: Canopy _____ ft. (4 ft. maximum allowed) Non-canopy _____ ft. (3 ft. maximum allowed)
2. Complete part "i" for listed hood **or** part "ii" for unlisted hood.
   i) Listed hood. Make and model No. _____ Listed CFM _____
   ii) Unlisted hood: Quality of air = Lineal ft. of hood from X CFM from Table below
   = _____ ft. X _____CFM/ft = _____CFM

Minimum net airflow for different types of unlisted hood. (507.13) **For island hood see SMC Sec 507.13.**

Identify the cooking appliances and circle the CFM applied. Where any combinations of cooking appliances are utilized under a single hood, the highest exhaust rate required by this table shall be used for the entire hood.

Hood Exhaust CFM Table	CFM / lineal ft. of hood front Canopy or Non-Canopy Hood
1. Extra heavy-duty cooking appliances (non-canopy hood not allowed) Type I hood e.g. All solid-fuel including solid-fuel pizza oven.	550
2. Heavy-duty cooking appliances Type I hood e.g. wok, broiler (gas or electric), gas burner range.	400
3. Medium-duty cooking appliances Type I hood e.g. deep fryer, Top range (electric or gas), skillet.	300
4. Light-duty cooking appliances Type II hood e.g. pizza oven (electric or gas), solid fuel (see #1).	200

G. **Exhaust duct system (506.3.4)**
1. Applicant shall provide the specified air velocity in exhaust duct.
2. Duct Size _____in. X _____in., duct area = $\frac{___ \text{ in.} \times ___ \text{ in.}}{144}$ = _____ft.^{2}

Type of Hood	Air Velocity (FPM)	CFM/Duct Area(FT^2)	Proposed Air Velocity
1. I	Req. 500 to recom. 2500	_____ / _____ =	_____ FPM
II	Recom. 500 to 2500	_____ / _____ =	_____ FPM

2. Static pressure loss
   duct _____in. + grease filters/extractor _____ in. + other _____ in. = Total _____ In. of H_2O
3. Fan and Motor shall be of sufficient capacity to provide the required air movement. Fan motor shall not be installed within ducts or under hood.
   Fan make and model _____ HP _____
   Static pressure _____ in. at _____ CFM.
4. Exhaust fan shall be interlocked with Type I cooking appliances and makeup air system. (507.2.1.1, 508.1)

Updated January 2016

City of Seattle
Department of Construction and Inspections

Commercial Kitchen Hood Worksheet 2012 SMC

Project Number: ☐☐☐☐☐☐☐

Site Address: _____