REGION NO.	STATE	FEDERAL AID PROJECT NO.	SHEET NO.
10	WA		36

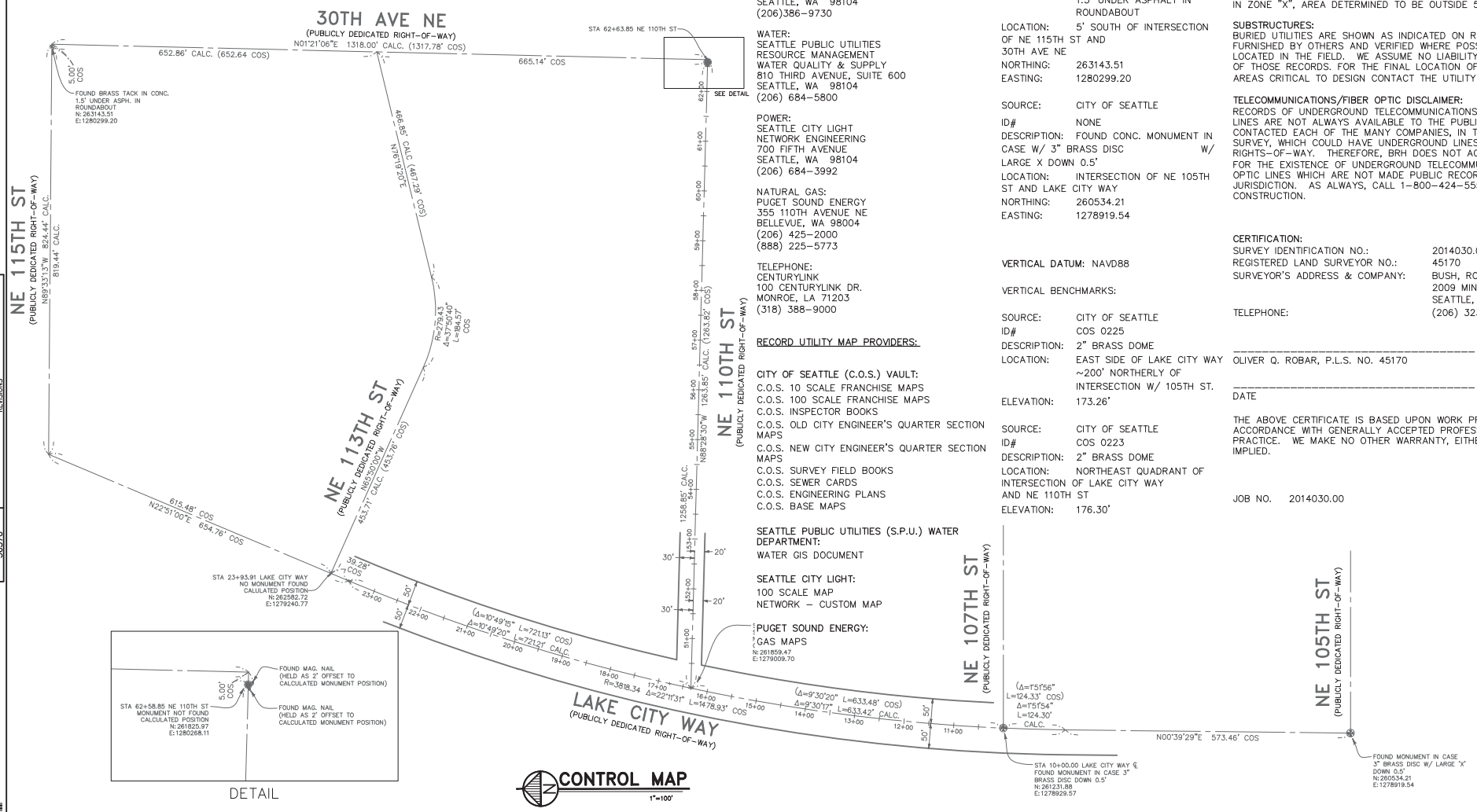

UTILITY PROVIDERS:

SANITARY SEWERS AND STORM DRAINAGE:
SEATTLE PUBLIC UTILITIES
MAINTENANCE & OPERATIONS
DRAINAGE & WASTEWATER DIVISION
DEXTER HORTON BUILDING, 10TH FLOOR
710 SECOND AVENUE
SEATTLE, WA 98104
(206)386–9730

WATER:
SEATTLE PUBLIC UTILITIES
RESOURCE MANAGEMENT
WATER QUALITY & SUPPLY
810 THIRD AVENUE, SUITE 600
SEATTLE, WA 98104
(206) 684–5800

POWER:
SEATTLE CITY LIGHT
NETWORK ENGINEERING
700 FIFTH AVENUE
SEATTLE, WA 98104
(206) 684–3992

NATURAL GAS:
PUGET SOUND ENERGY
355 110TH AVENUE NE
BELLEVUE, WA 98004
(206) 425–2000
(888) 225–5773

TELEPHONE:
CENTURYLINK
100 CENTURYLINK DR.
MONROE, LA 71203
(318) 388–9000

RECORD UTILITY MAP PROVIDERS:

CITY OF SEATTLE (C.O.S.) VAULT:
C.O.S. 10 SCALE FRANCHISE MAPS
C.O.S. 100 SCALE FRANCHISE MAPS
C.O.S. INSPECTOR BOOKS
C.O.S. OLD CITY ENGINEER'S QUARTER SECTION MAPS
C.O.S. NEW CITY ENGINEER'S QUARTER SECTION MAPS
C.O.S. SURVEY FIELD BOOKS
C.O.S. SEWER CARDS
C.O.S. ENGINEERING PLANS
C.O.S. BASE MAPS

SEATTLE PUBLIC UTILITIES (S.P.U.) WATER DEPARTMENT:
WATER GIS DOCUMENT

SEATTLE CITY LIGHT:
100 SCALE MAP
NETWORK – CUSTOM MAP

PUGET SOUND ENERGY:
GAS MAPS

HORIZONTAL DATUM: NAD 83/2011

HORIZONTAL BENCHMARKS:

OWNER:	CITY OF SEATTLE
ID#	NONE
DESCRIPTION:	FOUND BRASS TACK IN CONC. 1.5' UNDER ASPHALT IN ROUNDABOUT
LOCATION:	5' SOUTH OF INTERSECTION OF NE 115TH ST AND 30TH AVE NE
NORTHING:	263143.51
EASTING:	1280299.20

SOURCE:	CITY OF SEATTLE
ID#	NONE
DESCRIPTION:	FOUND CONC. MONUMENT IN CASE W/ 3" BRASS DISC W/ LARGE X DOWN 0.5'
LOCATION:	INTERSECTION OF NE 105TH ST AND LAKE CITY WAY
NORTHING:	260534.21
EASTING:	1278919.54

VERTICAL DATUM: NAVD88

VERTICAL BENCHMARKS:

SOURCE:	CITY OF SEATTLE
ID#	COS 0225
DESCRIPTION:	2" BRASS DOME
LOCATION:	EAST SIDE OF LAKE CITY WAY ~200' NORTHERLY OF INTERSECTION W/ 105TH ST.
ELEVATION:	173.26'

SOURCE:	CITY OF SEATTLE
ID#	COS 0223
DESCRIPTION:	2" BRASS DOME
LOCATION:	NORTHEAST QUADRANT OF INTERSECTION OF LAKE CITY WAY AND NE 110TH ST
ELEVATION:	176.30'

SITE NOTES

SITE ADDRESS:
LAKE CITY WAY AND NE 110TH ST

FLOOD ZONE:
THIS SITE APPEARS ON NATIONAL FLOOD INSURANCE RATE MAP, DATED MAY 16, 1995, COMMUNITY PANEL NO. 53033C0333F, AND IS SITUATED IN ZONE "X", AREA DETERMINED TO BE OUTSIDE 500 YEAR FLOODPLAIN.

SUBSTRUCTURES:
BURIED UTILITIES ARE SHOWN AS INDICATED ON RECORDS MAPS FURNISHED BY OTHERS AND VERIFIED WHERE POSSIBLE BY FEATURES LOCATED IN THE FIELD. WE ASSUME NO LIABILITY FOR THE ACCURACY OF THOSE RECORDS. FOR THE FINAL LOCATION OF EXISTING UTILITIES IN AREAS CRITICAL TO DESIGN CONTACT THE UTILITY OWNER/AGENCY.

TELECOMMUNICATIONS/FIBER OPTIC DISCLAIMER:
RECORDS OF UNDERGROUND TELECOMMUNICATIONS AND/OR FIBER OPTIC LINES ARE NOT ALWAYS AVAILABLE TO THE PUBLIC. BRH HAS NOT CONTACTED EACH OF THE MANY COMPANIES, IN THE COURSE OF THIS SURVEY, WHICH COULD HAVE UNDERGROUND LINES WITHIN ADJACENT RIGHTS–OF–WAY. THEREFORE, BRH DOES NOT ACCEPT RESPONSIBILITY FOR THE EXISTENCE OF UNDERGROUND TELECOMMUNICATIONS/FIBER OPTIC LINES WHICH ARE NOT MADE PUBLIC RECORD WITH THE LOCAL JURISDICTION. AS ALWAYS, CALL 1–800–424–5555 BEFORE CONSTRUCTION.

CERTIFICATION:

SURVEY IDENTIFICATION NO.:	2014030.00
REGISTERED LAND SURVEYOR NO.:	45170
SURVEYOR'S ADDRESS & COMPANY:	BUSH, ROED & HITCHINGS, INC. 2009 MINOR AVENUE EAST SEATTLE, WA 98102–3513
TELEPHONE:	(206) 323–4144

_____
OLIVER Q. ROBAR, P.L.S. NO. 45170

_____
DATE

THE ABOVE CERTIFICATE IS BASED UPON WORK PREPARED IN ACCORDANCE WITH GENERALLY ACCEPTED PROFESSIONAL SURVEY PRACTICE. WE MAKE NO OTHER WARRANTY, EITHER EXPRESSED OR IMPLIED.

JOB NO. 2014030.00

SC1
SURVEY CONTROL
LAKE CITY WAY NE

90% REVIEW
NOT FOR CONSTRUCTION
JANUARY 2015

APPROVED FOR ADVERTISING
NANCY LOCKE
DEPARTMENT OF FINANCE & ADMINISTRATIVE SERVICES
SEATTLE, WASHINGTON . . . . . 20 . .
BY: . . . . . .
PURCHASING & CONTRACTING SERVICES DIRECTOR

NAME OR INITIALS AND DATE	INITIALS AND DATE
DESIGNED PT	REVIEWED:
CHECKED PT	DES. CONST.
DRAWN PT	SDOT PROJ. MGR.
CHECKED PT	RECEIVED
	REVISED AS BUILT

ALL WORK SHALL BE DONE IN ACCORDANCE WITH THE CITY OF SEATTLE STANDARD PLANS AND SPECIFICATIONS AND OTHER DOCUMENTS CALLED FOR IN SECTION 0–02.3 OF THE PROJECT MANUAL.

OLIVER QUINN ROBAR
STATE OF WASHINGTON
45170
REGISTERED
PROFESSIONAL LAND SURVEYOR

City of Seattle
Seattle Department of Transportation
ORDINANCE NO. . . . . APPROVED. . . . . .
FUND: . . . . . .
SCALE: H. 1"=20', V. 1"=10' INSPECTOR'S BOOK . . . . . .

2015 SIDEWALK DEVELOPMENT AND SRTS – PACKAGE 4

JOB NO.	
PC	TS6068A
R/W	
CO	TS6068C
VAULT PLAN NO.	790–199
SHEET 36 OF 45	

VAULT SERIAL NO.	DATE	MARK	NATURE REVISIONS	MADE (CHK'D)	REV'D
36370					

P:\sidrafter\2015 sidewalks srts program\trinh-cgra\LAKE CITY WAY\A_PLOT FILES\TS5003A-P-CTRL PLAN_LAKE CITY WAY NE.dwg
Jan-14-15 4:11pm

REGION NO.	STATE	FEDERAL AID PROJECT NO.	SHEET NO.
10	WA		37

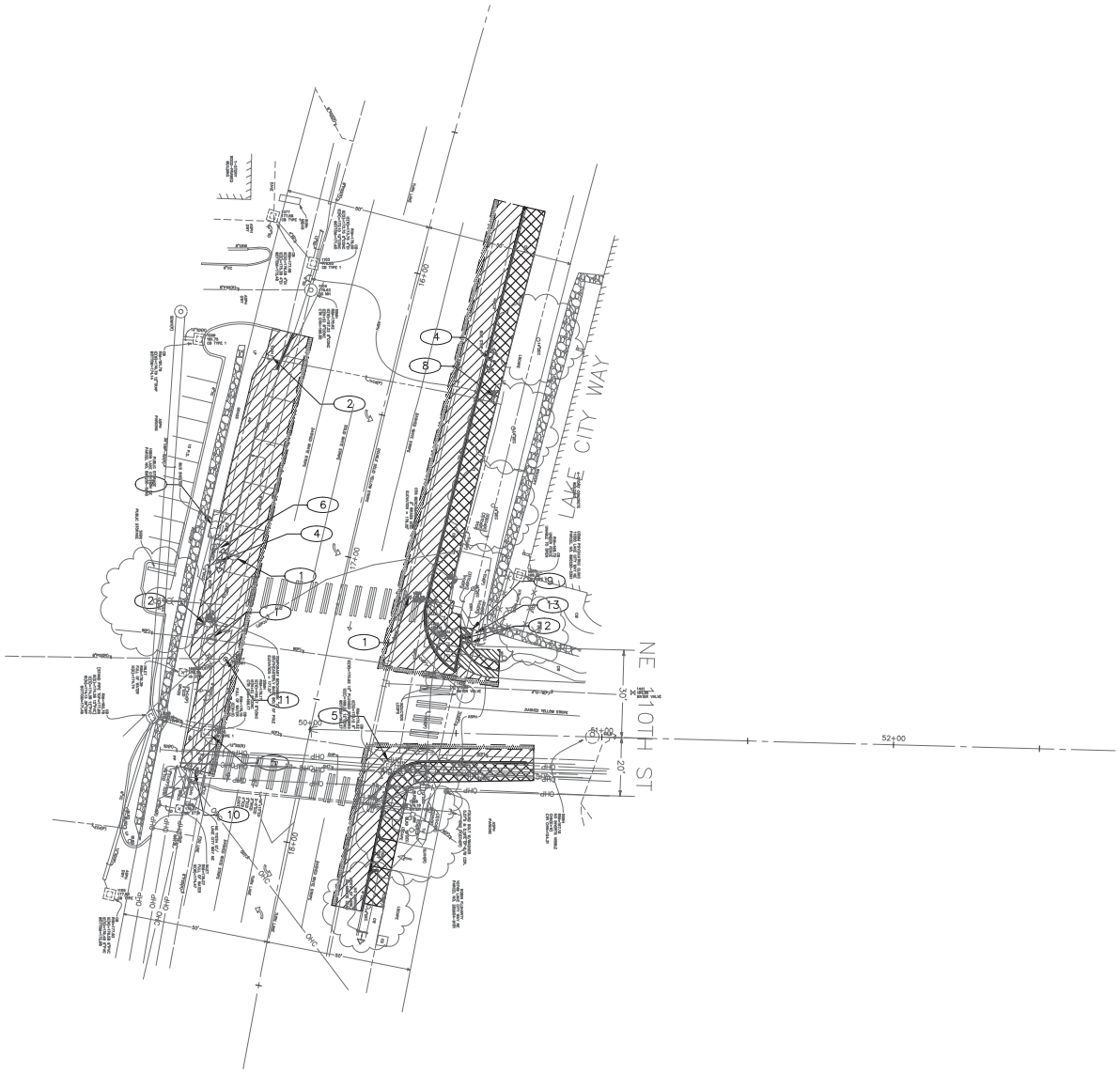

LEGEND:

- REMOVE PAVEMENT
- REMOVE ASPHALT PAVEMENT OVERLAY ONLY
- REMOVE SIDEWALK/DRIVEWAY
- REMOVE STAIRS
- CLEAR AND GRUB
- REMOVE CURB
- SAWCUT FULL DEPTH
- SAWCUT ASPHALT PAVEMENT OVERLAY ONLY

SITE PREPARATION NOTES:

1. ADJUST UTILITY TO GRADE
2. ADJUST HANDHOLE TO GRADE
3. REMOVE SIGN
4. REMOVE AND RELOCATE SIGN TO NEW LOCATION PER CHANNELIZATION PLANS.
5. CAP EX INL/CB
6. RELOCATE TRASH RECEPTACLE
7. REMOVE AND INSTALL EX BUS STOP SHELTER IN SAME LOCATION (BY OTHERS/KING COUNTY METRO)
8. REMOVE AND INSTALL EX BENCH IN SAME LOCATION
9. REMOVE EX CONC STAIRS
10. REMOVE BOLLARD
11. RELOCATE SEWER MANHOLE
12. REMOVE EX HANDRAIL

N

20 10 0 20 40

SCALE IN FEET

SP1

SITE PREPARATION PLAN

LAKE CITY WAY NE

VAULT SERIAL NO.	DATE	MARK	NATURE REVISIONS	MADE	CHK'D	REV'D
36370						

P:\stdrafter\2015 sidewalks srts program\trinh-cprs\LAKE CITY WAY\A_PLOT FILES\TS5003A-P-SITE-LAKE CITY WAY NE.dwg
Jan-14-15 4:11pm

90% REVIEW
NOT FOR CONSTRUCTION
JANUARY 2015

APPROVED FOR ADVERTISING
NANCY LOCKE
DEPARTMENT OF FINANCE & ADMINISTRATIVE SERVICES
SEATTLE, WASHINGTON . . . . . 20 . .
BY: . . . . . .
PURCHASING & CONTRACTING SERVICES DIRECTOR

NAME OR INITIALS AND DATE
DESIGNED PT. . . . . .
CHECKED . . . . . .
DRAWN . . . . . .
CHECKED PT . . . . . .

INITIALS AND DATE
REVIEWED:
DES. . . . . CONST. . . . . .
SDOT . . . . . PROJ. MGR. . . . .
RECEIVED . . . . . .
REVISED AS BUILT . . . . . .

ALL WORK SHALL BE DONE IN ACCORDANCE WITH THE CITY OF SEATTLE STANDARD PLANS AND SPECIFICATIONS AND OTHER DOCUMENTS CALLED FOR IN SECTION 0-02.3 OF THE PROJECT MANUAL.

STATE OF WASHINGTON 51781 REGISTERED PROFESSIONAL ENGINEER

City of Seattle
Seattle Department of Transportation
ORDINANCE NO. . . . . APPROVED. . . . . .
FUND: . . . . . .
SCALE: H. 1"=20', V. 1"=10' INSPECTOR'S BOOK . . . . . .

2015 SIDEWALK DEVELOPMENT AND SRTS – PACKAGE 4

JOB NO.
PC TS6068A
R/W
CO TS6068C
VAULT PLAN NO. 790–199
SHEET 37 OF 45

REGION NO.	STATE	FEDERAL AID PROJECT NO.	SHEET NO.
10	WA		38

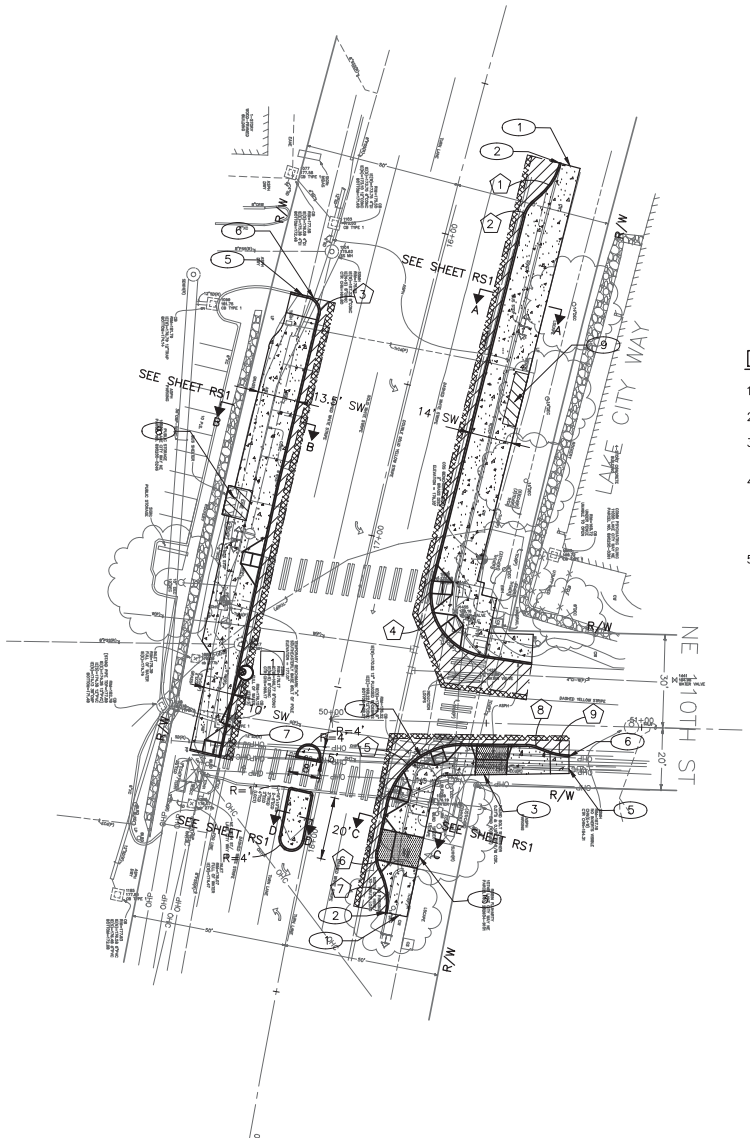

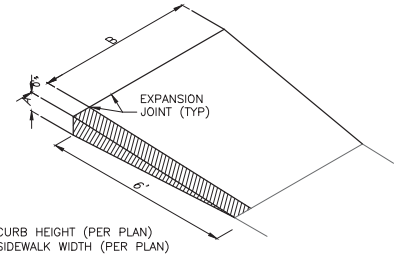

A = PROPOSED CURB HEIGHT (PER PLAN)
B = PROPOSED SIDEWALK WIDTH (PER PLAN)

END CURB AND SIDEWALK DETAIL
NTS

PAVING LEGEND

- DRIVEWAY, CEM CONC, 6" PER STD PLAN 430
- PAVEMENT, 2" HMA CL ½", OVER 11" HMA CL 1", OVER 6" MNRL AGG TYPE 2
- CEM CONC SIDEWALK W/ 25% POZZOLANS, PER STD PLAN 420.
- PAVEMENT, 2" HMA CL ½"
- BUS PAD. SEE CONSTRUCTION NOTES FOR TYPE.
- CURB RAMP W/25% POZZOLANS AND DETECTABLE WARNING, PER STD PLAN 422A.
- CEM CONC CURB PER STD PLAN 410B (H=4").

DRAINAGE NOTES

1. ALL INLET AND CATCH BASIN STATIONS AND OFFSETS ARE TO CENTER OF STRUCTURE.
2. PROTECT EXISTING UTILITIES UNLESS OTHERWISE NOTED. SEE STD SPEC 1–07.17.
3. INSTALL INLET PROTECTION ON ALL NEW AND EXISTING INLETS AND CATCH BASINS UNLESS OTHERWISE SPECIFIED.
4. EXISTING CAST IRON WATERMAIN AND BLOCKING SHALL BE PROTECTED DURING PAVEMENT AND SIDEWALK REMOVAL WORK. WHERE EXCAVATION IS WITHIN 1.5 VERTICAL FEET OF WATERMAIN, EXCAVATION SHALL BE BY HAND OR VACUUM. SEE SECTION 1–07.16 AND 1–07.17. SEE SECTION 1–07.28 FOR SPU NOTIFICATION REQUIREMENTS.
5. SEE NT1 FOR ADDITIONAL DRAINAGE NOTES.

CONSTRUCTION NOTES

1. MATCH EX SIDEWALK/LANDING
2. MATCH EX CURB
3. MATCH EX DRIVEWAY
4. MATCH EX CONC STAIRS
5. END SIDEWALK (SEE DETAIL PV1)
6. END CURB (SEE DETAIL PV1)
7. CAP INLET. REPLACE CASTING WITH SOLID LOCKING LID PER STD PLAN 230L
8. INSTALL B22 BUS SHELTER FOOTING. SEE KING COUNTY METRO STANDARD SHELTER FOOTING PLAN SHEET D103 FOR DETAILS. INSTALL EXISTING BUS SHELTER ON NEW FOOTING IN EXISTING LOCATION.
9. INSTALL B21 BUS SHELTER FOOTING FOR F52 SHELTER FRAME. SEE KING COUNTY METRO STANDARD SHELTER FOOTING PLAN SHEET D103 FOR DETAILS.

CURB RETURN SCHEDULE

	PC – STA, OFFSET	PT – STA, OFFSET	RADIUS	LENGTH	Δ	PC	1/4	1/2	3/4	PT
1	15+68.51, 29.89' LT	15+79.62, 26.63' LT	20.00'	11.67'	33.43	175.45	–	–	–	175.54
2	15+82.74, 24.60' LT	15+93.96, 24.92' LT	10.00'	5.93'	33.98	175.71	–	–	–	175.75
3	16+30.23, 37.75' RT	16+35.15, 32.72' RT	5.00'	7.85'	90.00	176.14	–	–	–	175.78
4	17+09.83, 22.27' LT	17+30.45, 43.69' LT	20.00'	33.32'	95.46	176.03	175.89	175.66	175.38	174.29
5	17+59.44, 43.27' LT	17+84.20, 23.05' LT	25.00'	34.46'	78.97	174.51	175.16	175.57	175.87	176.10
6	17+99.01, 22.98' LT	18+04.73, 24.70' LT	10.00'	6.03'	34.55	176.24	–	–	–	176.28
7	18+07.16, 26.33' LT	18+18.21, 29.74' LT	20.00'	11.64'	33.36	176.19	–	–	–	176.11
8	50+63.21, 6.61' RT	50+66.60, 7.16' RT	10.00'	3.46'	19.81	171.50	–	–	–	171.16
9	50+70.29, 8.44' RT	50+76.83, 9.54' RT	20.00'	6.65'	19.08	171.16	–	–	–	170.57
10	17+19.29, 44.07' LT	17+27.53, 55.58' LT	10.00'	15.64'	89.60					

DRAINAGE STRUCTURE SCHEDULE

	STATION (1ST AVE NW–LINE)	OFFSET	TYPE	RIM	INVERT (OUT)	INVERT (IN)	PIPE
1	17+51.68	32.24' LT	INLET 240D	175.97	174.70 (SW)	–	15LF 8" INLET CONN @ 5.00%

N

20 10 0 20 40
SCALE IN FEET

PV1
GRADING PAVING AND DRAINAGE PLAN
LAKE CITY WAY NE

VAULT SERIAL NO.	DATE	MARK	NATURE REVISIONS	MADE BY	CHK'D	REV'D
36370						

90% REVIEW
NOT FOR CONSTRUCTION
JANUARY 2015

APPROVED FOR ADVERTISING
NANCY LOCKE
DEPARTMENT OF FINANCE & ADMINISTRATIVE SERVICES
SEATTLE, WASHINGTON . . . . . 20 . .
BY: . . . . . .
PURCHASING & CONTRACTING SERVICES DIRECTOR

NAME OR INITIALS AND DATE
DESIGNED PT. . . . . .
CHECKED . . . . . .
DRAWN . . . . . .
CHECKED PT . . . . . .

INITIALS AND DATE
REVIEWED:
DES. . . . . CONST. . . . . .
SDOT . . . . . PROJ. MGR. . . . .
RECEIVED . . . . . .
REVISED AS BUILT . . . . . .

ALL WORK SHALL BE DONE IN ACCORDANCE WITH THE CITY OF SEATTLE STANDARD PLANS AND SPECIFICATIONS AND OTHER DOCUMENTS CALLED FOR IN SECTION 0–02.3 OF THE PROJECT MANUAL.

STATE OF WASHINGTON 51781 REGISTERED PROFESSIONAL ENGINEER

City of Seattle
Seattle Department of Transportation
ORDINANCE NO. . . . . APPROVED. . . . . .
FUND: . . . . . .
SCALE: H. 1"=20', V. 1"=10' INSPECTOR'S BOOK . . . . . .

2015 SIDEWALK DEVELOPMENT AND SRTS – PACKAGE 4

JOB NO. PC TS6068A R/W CO TS6068C
VAULT PLAN NO. 790–199
SHEET 38 OF 45

P:\atorfhr\2015 sidewalks srts program\trnh-cpra\LAKE CITY WAY\A_PLOT FILES\TS5003A-P-ROAD-LAKE CITY WAY NE.dwg
Jan-14-15 4:12pm

REGION NO.	STATE	FEDERAL AID PROJECT NO.	SHEET NO.
10	WA		39

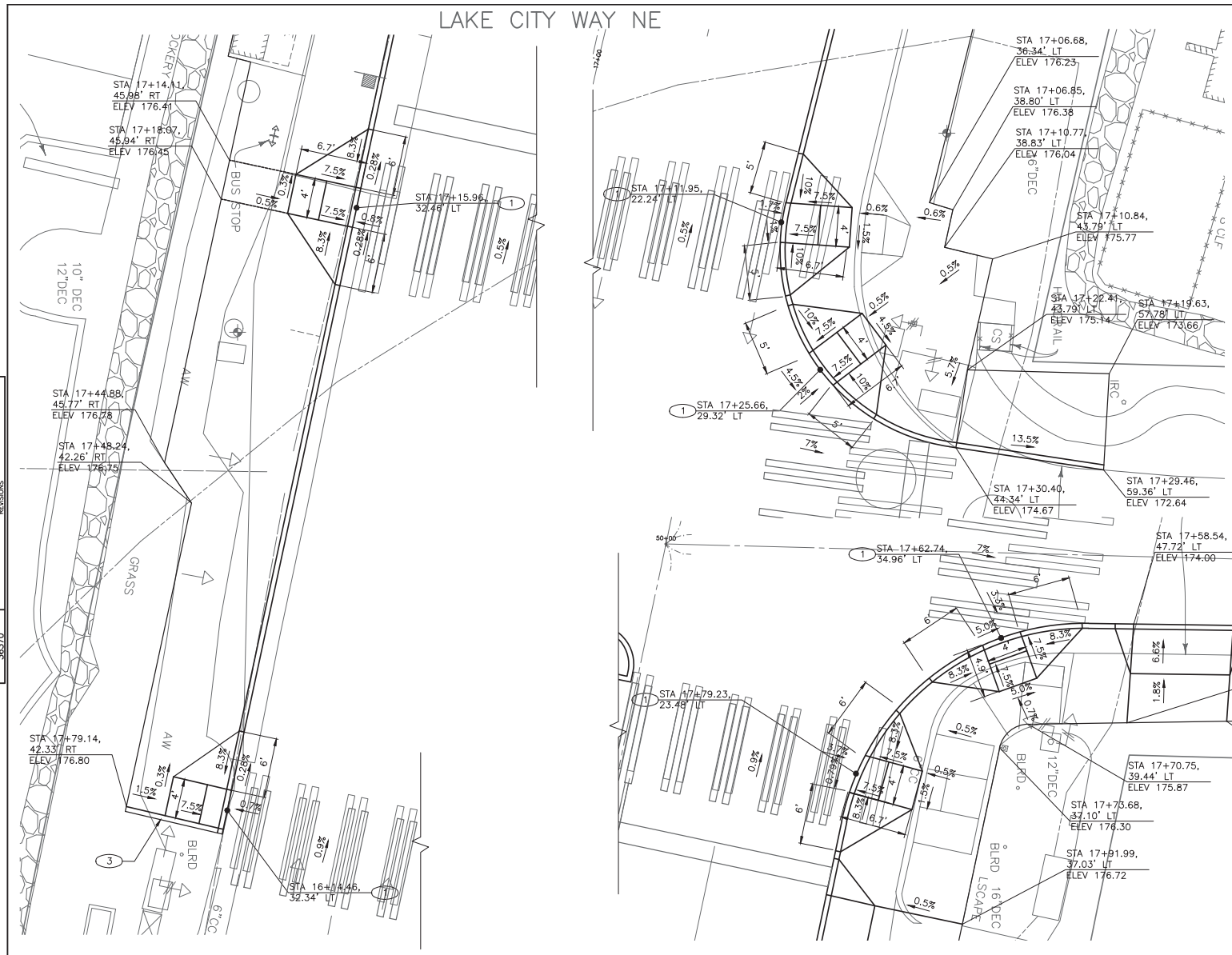

CURB RAMP LEGEND

CURB RAMP (PER STANDARD PLAN 422A)

CONSTRUCTION NOTES

1. CURB RAMP W/ 25% POZZOLANS PER STD PLAN 422A OR NON-STANDARD
2. SAW CEM CONC SIDEWALK, FULL DEPTH, AT EX SCORE LINE
3. CEM CONC RETAINING CURB PER STD PLAN 422b

CR1
CURB RAMPS
LAKE CITY WAY NE

VAULT SERIAL NO.	DATE	MARK	NATURE REVISIONS	MADE	CHK'D	REV'D
36370						

P:\stdrafter\2015 sidewalks srts program\trinh-cprs\LAKE CITY WAY\A_PLOT FILES\TS5003A-P-CURB-LAKE CITY WAY NE.dwg
Jan-14-15 4:12pm

90% REVIEW
NOT FOR CONSTRUCTION
JANUARY 2015

APPROVED FOR ADVERTISING
NANCY LOCKE
DEPARTMENT OF FINANCE & ADMINISTRATIVE SERVICES
SEATTLE, WASHINGTON . . . . . 20 . .
BY: PURCHASING & CONTRACTING SERVICES DIRECTOR

NAME OR INITIALS AND DATE
DESIGNED PT. . . . . .
CHECKED . . . . . .
DRAWN . . . . . .
CHECKED PT . . . . . .

INITIALS AND DATE
REVIEWED:
DES. . . . . CONST. . . . . .
SDOT . . . . . PROJ. MGR. . . . .
RECEIVED . . . . . .
REVISED AS BUILT . . . . . .

ALL WORK SHALL BE DONE IN ACCORDANCE WITH THE CITY OF SEATTLE STANDARD PLANS AND SPECIFICATIONS AND OTHER DOCUMENTS CALLED FOR IN SECTION 0-02.3 OF THE PROJECT MANUAL.

STATE OF WASHINGTON 51781 REGISTERED PROFESSIONAL ENGINEER

City of Seattle
Seattle Department of Transportation
ORDINANCE NO. . . . . APPROVED. . . . . .
FUND: . . . . . .
SCALE: H. 1"=20', V. 1"=10' INSPECTOR'S BOOK . . . . . .

2015 SIDEWALK DEVELOPMENT AND SRTS – PACKAGE 4

JOB NO. PC TS6068A
R/W
CO TS6068C
VAULT PLAN NO. 790-199
SHEET 39 OF 45

REGION NO.	STATE	FEDERAL AID PROJECT NO.	SHEET NO.
10	WA		40

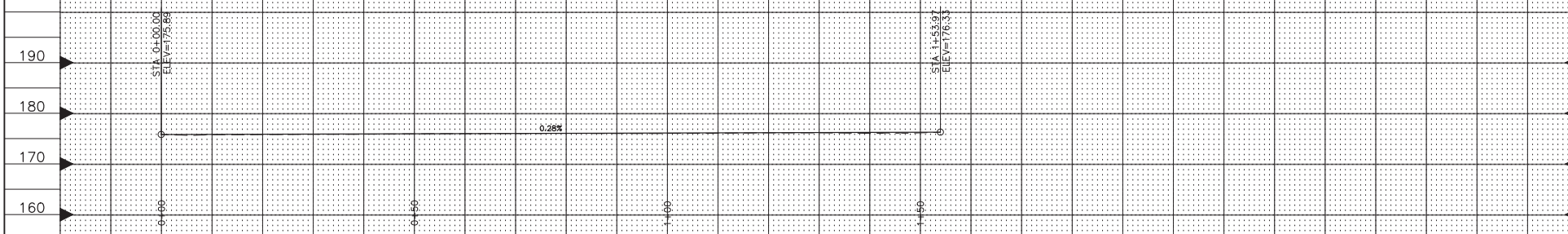

LAKE CITY WAY WEST FLOWLINE PROFILE

PROFILE STATIONING IS ALONG THE CURB FACE AND IS NOT TIED TO THE PROJECT STATIONING. BEGIN PROFILE AT PROJECT STA 16+32.28, OFFSET 35.93' RT

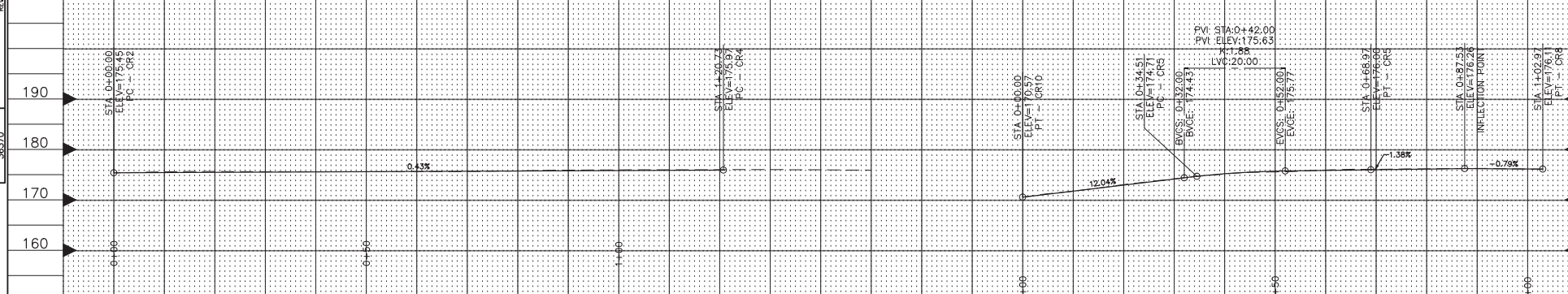

LAKE CITY WAY EAST FLOWLINE PROFILE

PROFILE STATIONING IS ALONG THE CURB FACE AND IS NOT TIED TO THE PROJECT STATIONING. BEGIN PROFILE AT PROJECT STA 15+71.54, OFFSET 29.90' LT

CURB RETURN 5 FLOWLINE PROFILE

PROFILE STATIONING IS ALONG THE CURB FACE AND IS NOT TIED TO THE PROJECT STATIONING. BEGIN PROFILE AT PROJECT STA 50+84.92, OFFSET 17.62' RT

RP1

10 5 0 10 20
SCALE IN FEET

ROADWAY PROFILES
LAKE CITY WAY NE

VAULT SERIAL NO.	DATE	MARK	NATURE REVISIONS	MADE	CHK'D	REV'D
36370						

P:\stdrafter\2015 sidewalks srts program\trinh-cprs\LAKE CITY WAY\A_PLOT FILES\TS5003A-P-RP-LAKE CITY WAY NE.dwg
Jan-14-15 4:12pm

CALL 2 WORKING DAYS
BEFORE YOU DIG
1-800-424-5555

90% REVIEW
NOT FOR CONSTRUCTION
JANUARY 2015

APPROVED FOR ADVERTISING
NANCY LOCKE
DEPARTMENT OF FINANCE & ADMINISTRATIVE SERVICES
SEATTLE, WASHINGTON . . . . . 20 . .
BY: . . . . . .
PURCHASING & CONTRACTING SERVICES DIRECTOR

NAME OR INITIALS AND DATE
DESIGNED PT. . . . . .
CHECKED . . . . . .
DRAWN . . . . . .
CHECKED PT . . . . . .

INITIALS AND DATE
REVIEWED:
DES. . . . . CONST. . . . . .
SDOT . . . . . PROJ. MGR. . . . .
RECEIVED . . . . . .
REVISED AS BUILT . . . . . .

ALL WORK SHALL BE DONE IN ACCORDANCE WITH THE CITY OF SEATTLE STANDARD PLANS AND SPECIFICATIONS AND OTHER DOCUMENTS CALLED FOR IN SECTION 0-02.3 OF THE PROJECT MANUAL.

STATE OF WASHINGTON 51781 REGISTERED PROFESSIONAL ENGINEER

City of Seattle
Seattle Department of Transportation
ORDINANCE NO. . . . . APPROVED. . . . . .
FUND: . . . . . .
SCALE: H. 1"=20', V. 1"=10' INSPECTOR'S BOOK . . . . . .

2015 SIDEWALK DEVELOPMENT AND SRTS – PACKAGE 4

JOB NO. PC TS6068A
R/W
CO TS6068C
VAULT PLAN NO. 790-199
SHEET 40 OF 45

REGION NO.	STATE	FEDERAL AID PROJECT NO.	SHEET NO.
10	WA		41

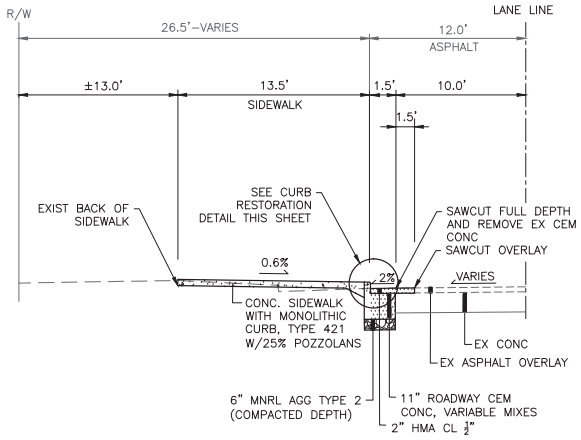

ROADWAY SECTION A–A

LAKE CITY WAY NE
NTS

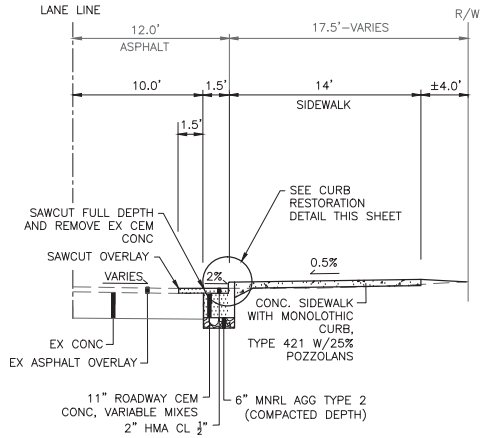

ROADWAY SECTION B–B

LAKE CITY WAY NE
NTS

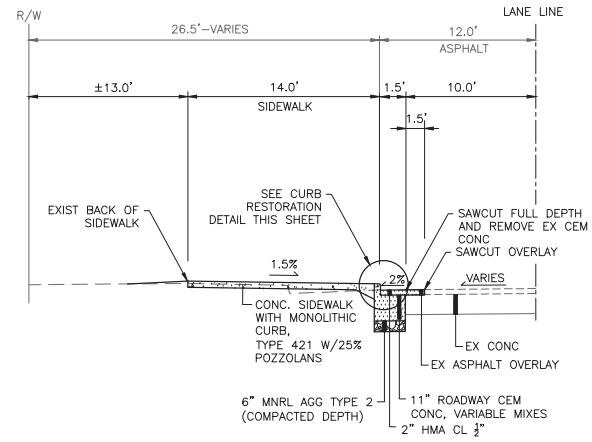

ROADWAY SECTION C–C

LAKE CITY WAY NE
NTS

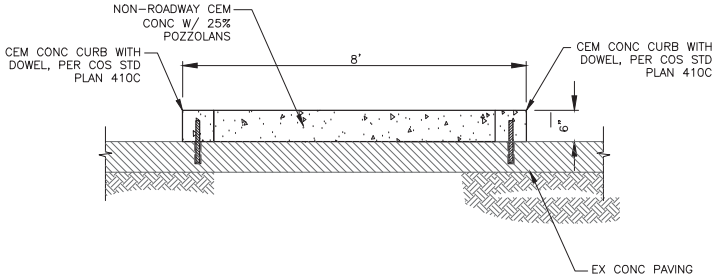

ROADWAY SECTION D–D

LAKE CITY WAY NE
NTS

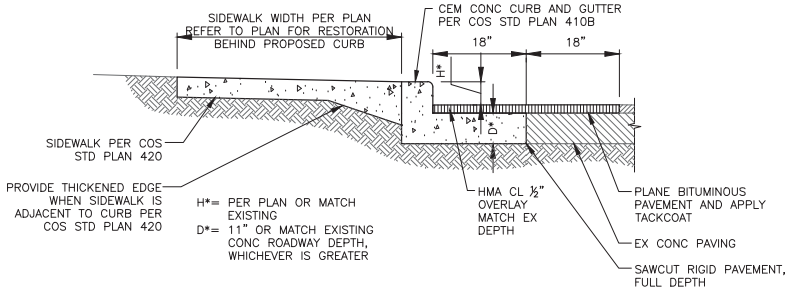

CURB RESTORATION

NTS

RS1
ROADWAY SECTIONS
LAKE CITY WAY NE

VAULT SERIAL NO.	DATE	MARK	NATURE REVISIONS	MADE BY	CHK'D	REV'D
36370						

P:\atorfer\2015 sidewalks srts program\trnh-cps\LAKE CITY WAY\A_PLOT FILES\TS5003A-P-RS-LAKE CITY WAY NE.dwg
Jan-14-15 4:12pm

90% REVIEW
NOT FOR CONSTRUCTION
JANUARY 2015

APPROVED FOR ADVERTISING
NANCY LOCKE
DEPARTMENT OF FINANCE & ADMINISTRATIVE SERVICES
SEATTLE, WASHINGTON . . . . . 20 . .
BY: . . . . . .
PURCHASING & CONTRACTING SERVICES DIRECTOR

NAME OR INITIALS AND DATE
DESIGNED .PT. . . . . .
CHECKED. . . . . .
DRAWN . . . . . .
CHECKED .PT . . . . . .

INITIALS AND DATE
REVIEWED:
DES. . . . . CONST. . . . . .
SDOT . . . . . PROJ. MGR. . . . .
RECEIVED . . . . . .
REVISED AS BUILT . . . . . .

ALL WORK SHALL BE DONE IN ACCORDANCE WITH THE CITY OF SEATTLE STANDARD PLANS AND SPECIFICATIONS AND OTHER DOCUMENTS CALLED FOR IN SECTION 0-02.3 OF THE PROJECT MANUAL.

STATE OF WASHINGTON 51781 REGISTERED PROFESSIONAL ENGINEER

City of Seattle
Seattle Department of Transportation
ORDINANCE NO. . . . . APPROVED. . . . . .
FUND: . . . . . .
SCALE: H. 1"=20', V. 1"=10' INSPECTOR'S BOOK . . . . . .

2015 SIDEWALK DEVELOPMENT AND SRTS – PACKAGE 4

JOB NO. PC TS6068A R/W CO TS6068C
VAULT PLAN NO. 790–199
SHEET 41 OF 45

REGION NO.	STATE	FEDERAL AID PROJECT NO.	SHEET NO.
10	WA		42

REMOVE/RELOCATE

- (R1) REMOVE PEDESTRIAN PUSHBUTTON ASSEMBLY AND ASSOCIATED WIRING. PLUG HOLES.
- (R2) REMOVE PEDESTRIAN PUSHBUTTON ASSEMBLY AND POST.
- (R3) RELOCATE EXISTING HANDHOLE
- (R4) REMOVE EXISTING QUEUE JUMP BUS SIGNAL HEAD, SIGN, AND ASSOCIATED WIRING
- (R5) REMOVE PEDESTRIAN PUSHBUTTON ASSEMBLY. MAINTAIN WIRING FOR NEW PEDESTRIAN PUSH BUTTON.
- (R6) REMOVE EXISTING PEDESTRIAN SIGNAL HEAD

CONSTRUCTION NOTES

1. FURNISH AND INSTALL ONE PEDESTRIAN PUSHBUTTON POST AND FOUNDATION AND ONE PEDESTRIAN PUSHBUTTON ASSEMBLY PER CITY OF SEATTLE STANDARD PLANS 521 AND 522b. CONNECT TO EXISTING PEDESTRIAN PUSHBUTTON CONDUCTORS.
2. FURNISH AND INSTALL ONE PEDESTRIAN PUSHBUTTON ASSEMBLY PER CITY OF SEATTLE STANDARD 522b. CONNECT TO EXISTING PEDESTRIAN PUSHBUTTON CONDUCTORS.
3. INTERCEPT EXISTING CONDUITS AND CONNECT INTO RELOCATED HANDHOLE.
4. USE THE EXISTING CONDUIT ROUTE TO CONTROLLER FOR NEW PEDESTRIAN CONDUCTORS.
5. INSTALL NEW COUNTDOWN PEDESTRIAN SIGNAL HEAD PER STD PLANS
6. 6' ROUND LOOP. SEE LOOP SCHEDULE.
7. INSTALL TYPE 2 HANDHOLE
8. INSTALL CENTRAL CONTROL UNIT FOR ACCESSIBLE PEDESTRIAN PUSHBUTTONS IN EX TYPE II CONTROLLER

SIGNAL HEAD DISPLAY

COUNTDOWN LED

LEFT MOUNTED

42 62 81 82

RIGHT MOUNTED

41 61

SG1
SIGNALS
LAKE CITY WAY NE

VAULT SERIAL NO.	DATE	MARK	NATURE REVISIONS	MADE BY	CHK'D	REV'D
36370						

P:\atorfer\2015 sidewalks srts program\tmh-cpa\LAKE CITY WAY\A_PLOT FILES\TS5003A-P-SIGL-LAKE CITY WAY NE.dwg
Jan-14-15 4:12pm

90% REVIEW
NOT FOR CONSTRUCTION
JANUARY 2015

APPROVED FOR ADVERTISING
NANCY LOCKE
DEPARTMENT OF FINANCE & ADMINISTRATIVE SERVICES
SEATTLE, WASHINGTON . . . . . 20 . .
BY: . . . . . .
PURCHASING & CONTRACTING SERVICES DIRECTOR

NAME OR INITIALS AND DATE	INITIALS AND DATE
DESIGNED PT.	REVIEWED: DES. . . . . CONST. . . . .
CHECKED PT.	SDOT . . . . . PROJ. MGR. . . . .
DRAWN PT.	RECEIVED . . . . .
CHECKED PT.	REVISED AS BUILT . . . . .

ALL WORK SHALL BE DONE IN ACCORDANCE WITH THE CITY OF SEATTLE STANDARD PLANS AND SPECIFICATIONS AND OTHER DOCUMENTS CALLED FOR IN SECTION 0-02.3 OF THE PROJECT MANUAL.

STATE OF WASHINGTON 51781 REGISTERED PROFESSIONAL ENGINEER

City of Seattle
Seattle Department of Transportation
ORDINANCE NO. . . . . APPROVED. . . . . .
FUND: . . . . . .
SCALE: H. 1"=20', V. 1"=10' INSPECTOR'S BOOK. . . . . .

2015 SIDEWALK DEVELOPMENT AND SRTS – PACKAGE 4

JOB NO. PC TS6068A R/W CO TS6068C
VAULT PLAN NO. 790-199
SHEET 42 OF 45

REGION NO.	STATE	FEDERAL AID PROJECT NO.	SHEET NO.
10	WA		43

WIRING SCHEDULE

RUN NO	SPAN OR CONDUIT SIZE	VEHICLE HEADS	PED HEADS	PPB'S 1PR(SH)	STREET LIGHT	LOOP	SIGNAL SERVICE	GROUND	COMMENTS
1	1-1"TRCD	–	–	1	–	–	–	–	–
2	1-2"TRCD	–	–	–	–	6-1C	–	–	–
3	2-2"TRCD 1-2"SL	EX	2-3C	2	EX	6-1C	–	–	EX TRCD
4	1-3"TRCD 1-2"SL	EX	4-3C	4	EX	6-1C	–	–	EX TRCD
5	1-3"TRCD 1-2"SL	EX	1-3C	1	EX	–	–	–	EX TRCD
6	EX	EX	6-3C	6	EX	6-1C	–	–	EX TRCD

2-5C -MULTI-CONDUCTOR CABLE
└─NO. OF CONDUCTORS
└─NO. OF CABLES

POLE/PEDESTAL SCHEDULE

POLE NO.	STATION/LOCATION AND OFFSET	POLE TYPE	LENGTH (FT)	FOUNDATION TYPE	MAST ARM LENGTH (FT)	LUMINAIRE ARM LENGTH (FT)	LUMINAIRE WATTAGE	LUMINAIRE MOUNTING HEIGHT (FT)	# OF CABLE OUTLETS	LOCATION OF OUTLETS	CITY LIGHT POLE #
1	17+13.55, RT 39.91'	PPB POST	4.5	PPB POST	–	–	–	–	–	–	–
2	17+08.44, LT 29.91'	PPB POST	4.5	PPB POST	–	–	–	–	–	–	–
3	17+21.42, LT 36.53'	PPB POST	4.5	PPB POST	–	–	–	–	–	–	–
4	17+65.42, LT 40.20'	PPB POST	4.5	PPB POST	–	–	–	–	–	–	–
5	17+82.92, LT 30.85'	PPB POST	4.5	PPB POST	–	–	–	–	–	–	–

NORTH = 0° AZIMUTH

(PPB) PUSH BUTTON MOUNTING SCHEDULE

PPB NO.	POLE NO.	LOCATION (AZIMUTH)	PHASE	ARROW DIRECTION
41	P1	167	4	RIGHT
42	P2	167	4	LEFT
61	P3	77	6	RIGHT
62	P4	77	6	LEFT
81	–	348	8	LEFT
82	P5	348	8	RIGHT

NORTH = 0° AZIMUTH

LOOP SCHEDULE

LOOP NO.	SHAPE	SIZE	TYPE	BIKE HOT SPOT	PHASE	CHANNEL	NO. TURNS	MEASURED AT HANDHOLE	
								INDUCTANCE	RESISTANCE
L41	QUAD	6' DIA	SAW CUT IN BASE	YES	4		6		
L42	DI-POLE	6' DIA	SAW CUT IN BASE	NO	4		4		

N

10 5 0 10 20
SCALE IN FEET

SG2
SIGNALS
LAKE CITY WAY NE

90% REVIEW
NOT FOR CONSTRUCTION
JANUARY 2015

APPROVED FOR ADVERTISING
NANCY LOCKE
DEPARTMENT OF FINANCE & ADMINISTRATIVE SERVICES
SEATTLE, WASHINGTON . . . . . 20 . .
BY: . . . . . .
PURCHASING & CONTRACTING SERVICES DIRECTOR

NAME OR INITIALS AND DATE
DESIGNED PT. . . . . .
CHECKED . ---- . . . . . .
DRAWN . ---- . . . . . .
CHECKED . PT . . . . . .

INITIALS AND DATE
REVIEWED:
DES. . . . . CONST. . . . . .
SDOT . . . . . PROJ. MGR. . . .
RECEIVED . . . . . .
REVISED AS BUILT . . . . . .

ALL WORK SHALL BE DONE IN ACCORDANCE WITH THE CITY OF SEATTLE STANDARD PLANS AND SPECIFICATIONS AND OTHER DOCUMENTS CALLED FOR IN SECTION 0-02.3 OF THE PROJECT MANUAL.

STATE OF WASHINGTON 51781 REGISTERED PROFESSIONAL ENGINEER

City of Seattle
Seattle Department of Transportation
ORDINANCE NO. . . . . APPROVED. . . . . .
FUND: . . . . . .
SCALE: H. 1"=20', V. 1"=10' INSPECTOR'S BOOK . . . . . .

2015 SIDEWALK DEVELOPMENT AND SRTS – PACKAGE 4

JOB NO. PC TS6068A
R/W
CO TS6068C
VAULT PLAN NO. 790-199
SHEET 43 OF 45

VAULT SERIAL NO.	DATE	MARK	NATURE REVISIONS	MADE	CHK'D	REV'D
36370						

P:\stdrafter\2015 sidewalks srts program\trinh-cprs\LAKE CITY WAY\A_PLOT FILES\TS5003A-P-SIGL-LAKE CITY WAY NE.dwg
Jan-14-15 4:12pm

REGION NO.	STATE	FEDERAL AID PROJECT NO.	SHEET NO.
10	WA		44

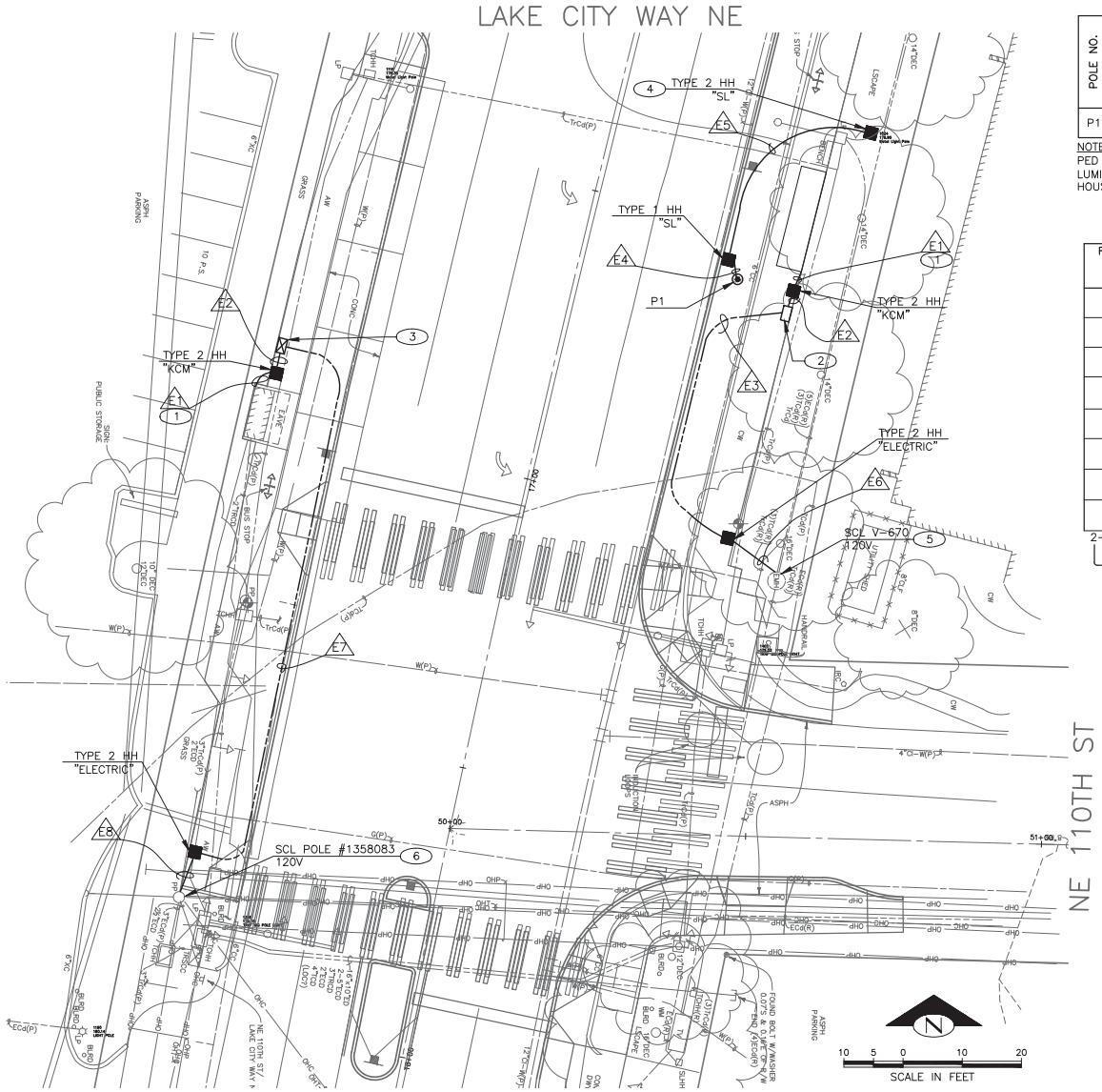

POLE/PEDESTAL SCHEDULE

POLE NO.	STATION/LOCATION AND OFFSET	POLE TYPE	LENGTH (FT)	FOUNDATION TYPE	MAST ARM LENGTH (FT)	LUMINAIRE ARM LENGTH (FT)	LUMINAIRE WATTAGE	LUMINAIRE MOUNTING HEIGHT (FT)	# OF CABLE OUTLETS	LOCATION OF OUTLETS	CITY LIGHT POLE #
P1	XX+XX.XX, RT XX.X'	POST TOP PED LIGHT	14	STD PLAN NO. 543B	–	N/A	70W HPS	14	–	–	–

NOTES:
PED LIGHT POLE (APR4–14–B104–GN8TX).
LUMINAIRE (Z15–70HPS–AC–3–120–SFZ4–GN8TX) WITH UTILTY FITTER (SFPH4–PH8–120–GN8TX).
HOUSE–SIDE OF LUMINAIRE SHALL FACE THE CURB.

WIRING SCHEDULE

RUN NO (XX)	SPAN WIRE OR CONDUIT SIZE	SERVICE	STREET LIGHTING	GROUND	REMARKS
E1	1–1" ECD				TO BUS SHELTER LEG
E2	2 – 2" ECD				FUTURE METRO BUS SHELTER LIGHTING
E3	1 – 2" ECD				FUTURE METRO BUS SHELTER LIGHTING
E4	1 – 2" ECD		*	1–#6	* #10 POLE & BRACKET CABLE OR #12, 20–10 CABLE
E5	1 – 2" ECD		2–#6	1–#6	
E6	1 – 3" ECD				COORDINATE WITH SCL ELECTRICAL SERVICE REPRESENTATIVE (NORTH) FOR VAULT PENETRATION.
E7	1 – 2" ECD	3–#2			
E8	1 – 3" ECD RISER				COORDINATE WITH SCL ELECTRICAL SERVICE REPRESENTATIVE (NORTH) FOR SERVICE CONNECTION.

2–5C –MULTI–CONDUCTOR CABLE
└─NO. OF CONDUCTORS
└─NO. OF CABLES

CONSTRUCTION NOTES

1. INSTALL CONDUIT STUB–UP TO BUS SHELTER ELECTRICAL LEG.
2. INSTALL BLOCKOUT FOR KCM SERVICE CABINET FOUNDATION (12" X 16").
3. INSTALL KCM SERVICE CABINET AND FOUNDATION.
4. INTERCEPT EXISTING LIGHTING CONDUIT WITH NEW HANDHOLE. COIL 20' OF WIRING IN NEW HANDHOLE. COORDINATE WITH SCL ELECTRICAL SERVICE REPRESENTATIVE (NORTH) FOR SERVICE CONNECTION.
5. SERVICE POINT. COORDINATE WITH SCL ELECTRICAL SERVICE REPRESENTATIVE (NORTH) FOR VAULT PENETRATION.
6. SERVICE POINT. COORDINATE WITH SCL ELECTRICAL SERVICE REPRESENTATIVE (NORTH) FOR CONDUIT RISER ATTACHMENT.

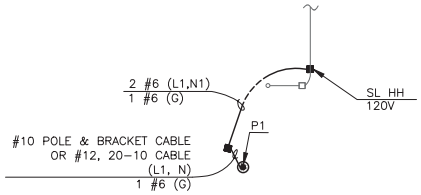

CIRCUIT SCHEMATIC

EL1
ELECTRICAL
LAKE CITY WAY NE

VAULT SERIAL NO.	DATE	MARK	NATURE REVISIONS	MADE BY	CK'D	REV'D
36370						

90% REVIEW
NOT FOR CONSTRUCTION
JANUARY 2015

APPROVED FOR ADVERTISING
NANCY LOCKE
DEPARTMENT OF FINANCE & ADMINISTRATIVE SERVICES
SEATTLE, WASHINGTON . . . . . 20 . .
BY: . . . . . .
PURCHASING & CONTRACTING SERVICES DIRECTOR

NAME OR INITIALS AND DATE
DESIGNED .PT. . . . . .
CHECKED. . . . . .
DRAWN . . . . . .
CHECKED .PT . . . . . .

INITIALS AND DATE
REVIEWED:
DES. . . . . CONST. . . . . .
SDOT . . . . . PROJ. MGR. . . . .
RECEIVED . . . . . .
REVISED AS BUILT . . . . . .
ALL WORK SHALL BE DONE IN ACCORDANCE WITH THE CITY OF SEATTLE STANDARD PLANS AND SPECIFICATIONS AND OTHER DOCUMENTS CALLED FOR IN SECTION 0–02.3 OF THE PROJECT MANUAL.

STATE OF WASHINGTON 45615 REGISTERED PROFESSIONAL ENGINEER

City of Seattle
Seattle Department of Transportation
ORDINANCE NO. . . . . APPROVED. . . . . .
FUND: . . . . . .
SCALE: INSPECTOR'S BOOK . . . . . .

2015 SIDEWALK DEVELOPMENT AND SRTS – PACKAGE 4

JOB NO. PC TS6068A R/W CO TS6068C
VAULT PLAN NO. 790–199
SHEET 44 OF 45

P:\atorfer\2015 sidewalks srts program\trnh-cpra\LAKE CITY WAY\A_PLOT FILES\TS5003A-P-ELEC-LAKE CITY WAY NE.dwg
Jan-14-15 4:12pm

REGION NO.	STATE	FEDERAL AID PROJECT NO.	SHEET NO.
10	WA		45

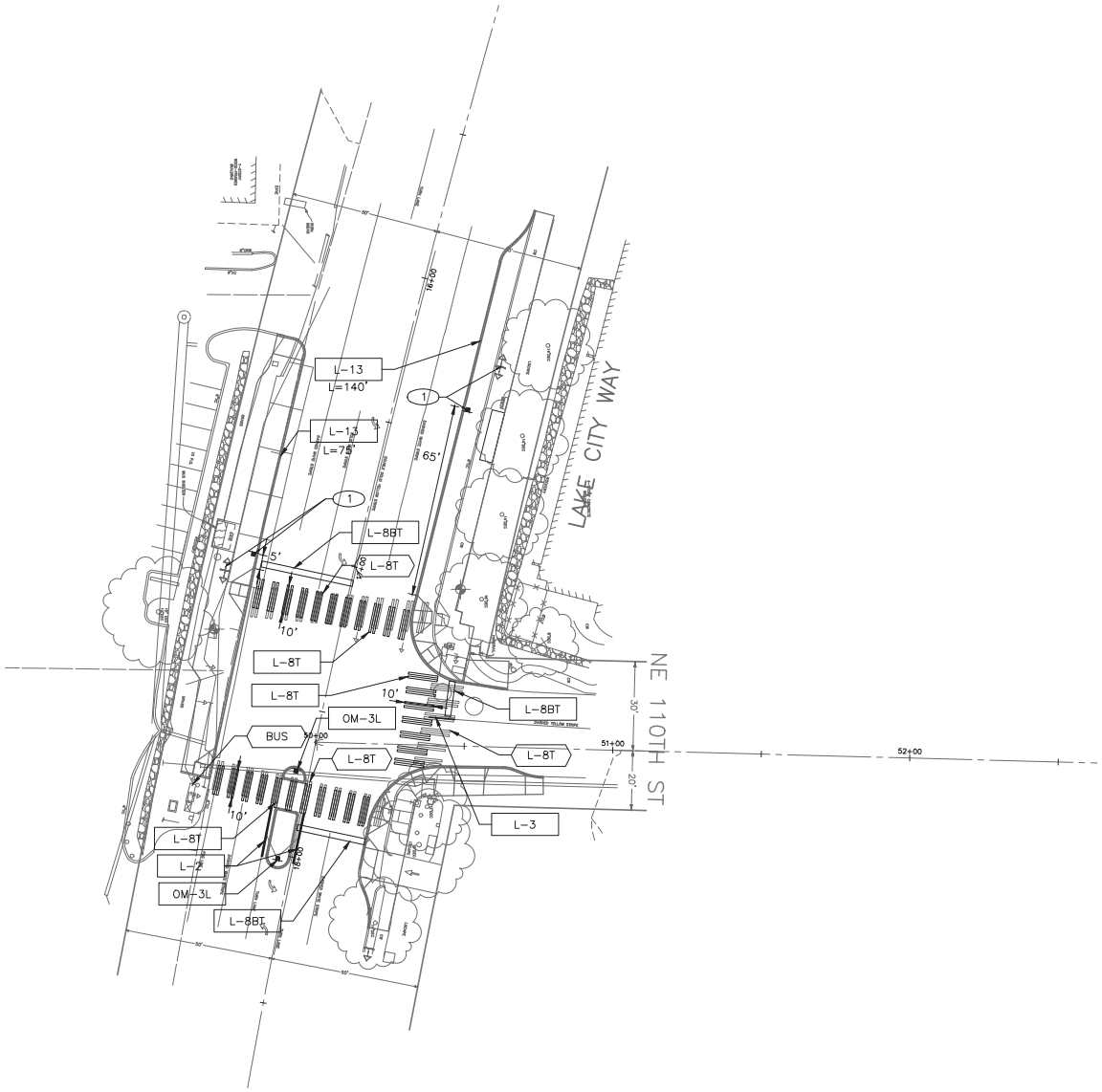

CONSTRUCTION NOTES

(1) RELOCATE EX SIGN (PER COS STD PLAN NO. 620/621).

REMOVAL NOTES

(R1) REMOVE EXISTING SIGNS AND SIGN POSTS

GENERAL NOTES

1. ALL STRIPING IN STANDARD PAINT.
2. ALL CROSSWALKS SHALL BE 10' WIDE

CHANNELIZATION LEGEND

L-2	THERMOPLASTIC YELLOW 4"
L-8BT	THERMOPLASTIC 24" STOP BAR
L-8T	THERMOPLASTIC 8" CROSSWALK. SEE STD PLAN 712 FOR SPACING AND ADDITIONAL DETAILS
L-13	BUS ZONE CURB MARKING

INSTALL

REMOVE

N

20 10 0 20 40

SCALE IN FEET

CH1

CHANNELIZATION AND SIGNING

LAKE CITY WAY NE

CALL 2 WORKING DAYS
BEFORE YOU DIG
1-800-424-5555

90% REVIEW
NOT FOR CONSTRUCTION
JANUARY 2015

APPROVED FOR ADVERTISING
NANCY LOCKE
DEPARTMENT OF FINANCE & ADMINISTRATIVE SERVICES
SEATTLE, WASHINGTON . . . . . 20 . .
BY: . . . . . .
PURCHASING & CONTRACTING SERVICES DIRECTOR

NAME OR INITIALS AND DATE
DESIGNED PT. . . . . .
CHECKED . . . . . .
DRAWN . . . . . .
CHECKED PT . . . . . .

INITIALS AND DATE
REVIEWED:
DES. . . . . CONST. . . . . .
SDOT . . . . . PROJ. MGR. . . . .
RECEIVED . . . . . .
REVISED AS BUILT . . . . . .

ALL WORK SHALL BE DONE IN ACCORDANCE WITH THE CITY OF SEATTLE STANDARD PLANS AND SPECIFICATIONS AND OTHER DOCUMENTS CALLED FOR IN SECTION 0-02.3 OF THE PROJECT MANUAL.

STATE OF WASHINGTON 51761 REGISTERED PROFESSIONAL ENGINEER

City of Seattle
Seattle Department of Transportation
ORDINANCE NO. . . . . APPROVED. . . . . .
FUND: . . . . . .
SCALE: H. 1"=20', V. 1"=10' INSPECTOR'S BOOK . . . . . .

2015 SIDEWALK DEVELOPMENT AND SRTS – PACKAGE 4

JOB NO. PC TS6068A
R/W
CO TS6068C
VAULT PLAN NO. 790-199
SHEET 45 OF 45

VAULT SERIAL NO.	DATE	MARK	NATURE REVISIONS	MADE	CHK'D	REV'D
36370						

P:\stdrafter\2015 sidewalks srts program\trinh-cprs\LAKE CITY WAY\A_PLOT FILES\TS5003A-P-CHAN-LAKE CITY WAY NE.dwg
Jan-14-15 4:13pm