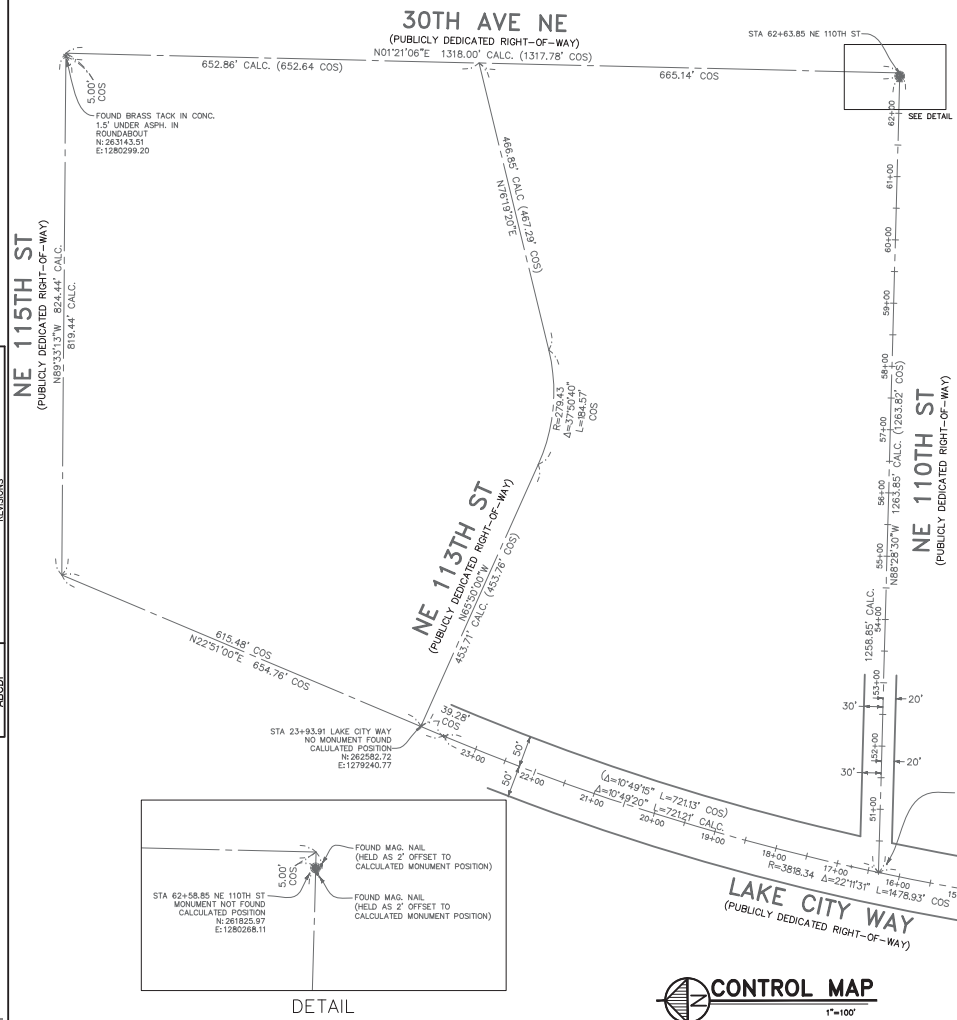

UTILITY PROVIDERS:

SANITARY SEWERS AND STORM DRAINAGE:
SEATTLE PUBLIC UTILITIES
MAINTENANCE & OPERATIONS
DRAINAGE & WASTEWATER DIVISION
DEXTER HORTON BUILDING, 10TH FLOOR
710 SECOND AVENUE
SEATTLE, WA 98104
(206)386-9730

WATER:
SEATTLE PUBLIC UTILITIES
RESOURCE MANAGEMENT
WATER QUALITY & SUPPLY
810 THIRD AVENUE, SUITE 600
SEATTLE, WA 98104
(206) 684-5800

POWER:
SEATTLE CITY LIGHT
NETWORK ENGINEERING
700 FIFTH AVENUE
SEATTLE, WA 98104
(206) 684-3992

NATURAL GAS:
PUGET SOUND ENERGY
355 110TH AVENUE NE
BELLEVUE, WA 98004
(206) 425-2000
(888) 225-5773

TELEPHONE:
CENTURYLINK
100 CENTURYLINK DR.
MONROE, LA 71203
(318) 388-9000

RECORD UTILITY MAP PROVIDERS:

CITY OF SEATTLE (C.O.S.) VAULT:
C.O.S. 10 SCALE FRANCHISE MAPS
C.O.S. 100 SCALE FRANCHISE MAPS
C.O.S. INSPECTOR BOOKS
C.O.S. OLD CITY ENGINEER'S QUARTER SECTION MAPS
C.O.S. NEW CITY ENGINEER'S QUARTER SECTION MAPS
C.O.S. SURVEY FIELD BOOKS
C.O.S. SEWER CARDS
C.O.S. ENGINEERING PLANS
C.O.S. BASE MAPS

SEATTLE PUBLIC UTILITIES (S.P.U.) WATER DEPARTMENT:
WATER GIS DOCUMENT

SEATTLE CITY LIGHT:
100 SCALE MAP
NETWORK - CUSTOM MAP

PUGET SOUND ENERGY:
GAS MAPS

HORIZONTAL DATUM: NAD 83/2011

HORIZONTAL BENCHMARKS:

OWNER:	CITY OF SEATTLE
ID#	NONE
DESCRIPTION:	FOUND BRASS TACK IN CONC. 1.5' UNDER ASPHALT IN ROUNDABOUT
LOCATION:	5' SOUTH OF INTERSECTION OF NE 115TH ST AND 30TH AVE NE
NORTHING:	263143.51
EASTING:	1280299.20

SOURCE:	CITY OF SEATTLE
ID#	NONE
DESCRIPTION:	FOUND CONC. MONUMENT IN CASE W/ 3" BRASS DISC W/ LARGE X DOWN 0.5'
LOCATION:	INTERSECTION OF NE 105TH ST AND LAKE CITY WAY
NORTHING:	260534.21
EASTING:	1278919.54

VERTICAL DATUM: NAVD88

VERTICAL BENCHMARKS:

SOURCE:	CITY OF SEATTLE
ID#	COS 0225
DESCRIPTION:	2" BRASS DOME
LOCATION:	EAST SIDE OF LAKE CITY WAY ~200' NORTHERLY OF INTERSECTION W/ 105TH ST.
ELEVATION:	173.26'

SOURCE:	CITY OF SEATTLE
ID#	COS 0223
DESCRIPTION:	2" BRASS DOME
LOCATION:	NORTHEAST QUADRANT OF INTERSECTION OF LAKE CITY WAY AND NE 110TH ST
ELEVATION:	176.30'

SITE NOTES

SITE ADDRESS:
LAKE CITY WAY AND NE 110TH ST

FLOOD ZONE:
THIS SITE APPEARS ON NATIONAL FLOOD INSURANCE RATE MAP, DATED MAY 16, 1995, COMMUNITY PANEL NO. 53033C0333F, AND IS SITUATED IN ZONE "X", AREA DETERMINED TO BE OUTSIDE 500 YEAR FLOODPLAIN.

SUBSTRUCTURES:
BURIED UTILITIES ARE SHOWN AS INDICATED ON RECORDS MAPS FURNISHED BY OTHERS AND VERIFIED WHERE POSSIBLE BY FEATURES LOCATED IN THE FIELD. WE ASSUME NO LIABILITY FOR THE ACCURACY OF THOSE RECORDS. FOR THE FINAL LOCATION OF EXISTING UTILITIES IN AREAS CRITICAL TO DESIGN CONTACT THE UTILITY OWNER/AGENCY.

TELECOMMUNICATIONS/FIBER OPTIC DISCLAIMER:
RECORDS OF UNDERGROUND TELECOMMUNICATIONS AND/OR FIBER OPTIC LINES ARE NOT ALWAYS AVAILABLE TO THE PUBLIC. BRH HAS NOT CONTACTED EACH OF THE MANY COMPANIES, IN THE COURSE OF THIS SURVEY, WHICH COULD HAVE UNDERGROUND LINES WITHIN ADJACENT RIGHTS-OF-WAY. THEREFORE, BRH DOES NOT ACCEPT RESPONSIBILITY FOR THE EXISTENCE OF UNDERGROUND TELECOMMUNICATIONS/FIBER OPTIC LINES WHICH ARE NOT MADE PUBLIC RECORD WITH THE LOCAL JURISDICTION. AS ALWAYS, CALL 1-800-424-5555 BEFORE CONSTRUCTION.

CERTIFICATION:

SURVEY IDENTIFICATION NO.:	2014030.00
REGISTERED LAND SURVEYOR NO.:	45170
SURVEYOR'S ADDRESS & COMPANY:	BUSH, ROED & HITCHINGS, INC. 2009 MINOR AVENUE EAST SEATTLE, WA 98102-3513
TELEPHONE:	(206) 323-4144

OLIVER Q. ROBAR, P.L.S. NO. 45170

DATE

THE ABOVE CERTIFICATE IS BASED UPON WORK PREPARED IN ACCORDANCE WITH GENERALLY ACCEPTED PROFESSIONAL SURVEY PRACTICE. WE MAKE NO OTHER WARRANTY, EITHER EXPRESSED OR IMPLIED.

JOB NO. 2014030.00

SC1
SURVEY CONTROL
LAKE CITY WAY NE

60% REVIEW
NOT FOR CONSTRUCTION
OCTOBER 2014

APPROVED FOR ADVERTISING
NANCY LOCKE
DEPARTMENT OF FINANCE & ADMINISTRATIVE SERVICES
SEATTLE, WASHINGTON . . . . . 20 . .
BY: . . . . . .
PURCHASING & CONTRACTING SERVICES DIRECTOR

NAME OR INITIALS AND DATE	INITIALS AND DATE
DESIGNED PT.	REVIEWED:
CHECKED	DES. . . . . CONST. . . . .
	SDOT . . . . . PROJ. MGR. . . .
DRAWN	RECEIVED . . . . .
CHECKED . PT	REVISED AS BUILT . . . . .

ALL WORK SHALL BE DONE IN ACCORDANCE WITH THE CITY OF SEATTLE STANDARD PLANS AND SPECIFICATIONS AND OTHER DOCUMENTS CALLED FOR IN SECTION 0-02.3 OF THE PROJECT MANUAL.

OLIVER QUINN ROBAR
STATE OF WASHINGTON
45170
REGISTERED
PROFESSIONAL LAND SURVEYOR

City of Seattle
Seattle Department of Transportation
ORDINANCE NO. . . . . APPROVED. . . . . .
FUND: . . . . . .
SCALE: H. 1"=20', V. 1"=10' INSPECTOR'S BOOK . . . . . .

2015 SIDEWALK DEVELOPMENT AND SRTS – PACKAGE 4

JOB NO. PC TS6068A R/W CO TS6068C
VAULT PLAN NO. XXX-YYY
SHEET 27 OF 42

VAULT SERIAL NO.	DATE	MARK	NATURE REVISIONS	MADE	CHK'D	REV'D
ABODF						

P:\STDrafter\2015 Sidewalks SRTS Program\Trinh-CPRS\LAKE CITY WAY\A_PLOT FILES\TS5003A-P-CTRL PLAN_LAKE CITY WAY NE.dwg
Oct-23-14 11:50am

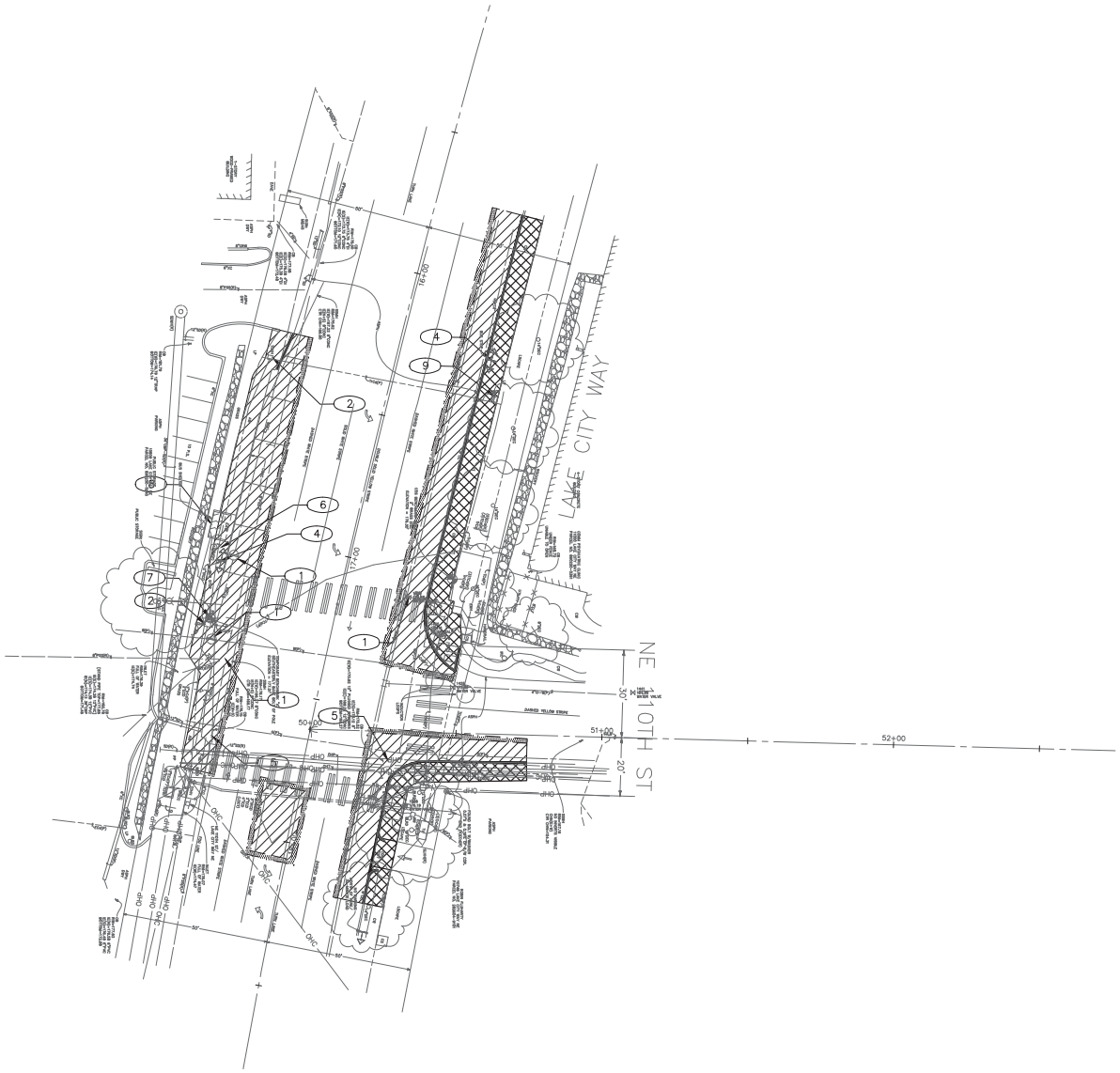

LEGEND:

- REMOVE PAVEMENT
- REMOVE ASPHALT PAVEMENT OVERLAY ONLY
- REMOVE SIDEWALK/DRIVEWAY
- REMOVE CURB
- SAWCUT FULL DEPTH
- SAWCUT ASPHALT PAVEMENT OVERLAY ONLY

SITE PREPARATION NOTES:

1. ADJUST UTILITY TO GRADE
2. ADJUST PULL BOX TO GRADE
3. REMOVE SIGN
4. REMOVE AND RELOCATE SIGN TO NEW LOCATION PER CHANNELIZATION PLANS.
5. CAP EX INL/CB
6. RELOCATE TRASH RECEPTACLE
7. ADJUST TRAFFIC SIGNAL POLE TO GRADE
8. REMOVE AND INSTALL EX BUS STOP SHELTER IN SAME LOCATION (BY OTHERS/KING COUNTY METRO)
9. REMOVE AND INSTALL EX BENCH IN SAME LOCATION

N

20 10 0 20 40

SCALE IN FEET

SP1

SITE PREPARATION PLAN

LAKE CITY WAY NE

VAULT SERIAL NO.	DATE	MARK	NATURE REVISIONS	MADE BY	CHK'D	REV'D
ABCDE						

P:\STDrafter\2015 Sidewalks SRTS Program\Trim-CPRS\LAKE CITY WAY\A_PLOT FILES\TS5003A-P-SITE-LAKE CITY WAY NE.dwg
Oct-23-14 11:56am

CALL 2 WORKING DAYS BEFORE YOU DIG 1-800-424-5555

60% REVIEW
NOT FOR CONSTRUCTION
OCTOBER 2014

APPROVED FOR ADVERTISING
NANCY LOCKE
DEPARTMENT OF FINANCE & ADMINISTRATIVE SERVICES
SEATTLE, WASHINGTON . . . . . 20 . .
BY: . . . . . .
PURCHASING & CONTRACTING SERVICES DIRECTOR

NAME OR INITIALS AND DATE
DESIGNED PT. . . . . .
CHECKED . . . . . .
DRAWN . . . . . .
CHECKED PT . . . . . .

INITIALS AND DATE
REVIEWED:
DES. . . . . CONST. . . . . .
SDOT . . . . . PROJ. MGR. . . . .
RECEIVED . . . . . .
REVISED AS BUILT . . . . . .

ALL WORK SHALL BE DONE IN ACCORDANCE WITH THE CITY OF SEATTLE STANDARD PLANS AND SPECIFICATIONS AND OTHER DOCUMENTS CALLED FOR IN SECTION 0-02.3 OF THE PROJECT MANUAL.

STATE OF WASHINGTON 51781 REGISTERED PROFESSIONAL ENGINEER

City of Seattle
Seattle Department of Transportation
ORDINANCE NO. . . . . APPROVED. . . . . .
FUND: . . . . . .
SCALE: H. 1"=20', V. 1"=10' INSPECTOR'S BOOK . . . . . .

2015 SIDEWALK DEVELOPMENT AND SRTS – PACKAGE 4

JOB NO. PC TS6068A R/W CO TS6068C
VAULT PLAN NO. XXX-YYY
SHEET 28 OF 42

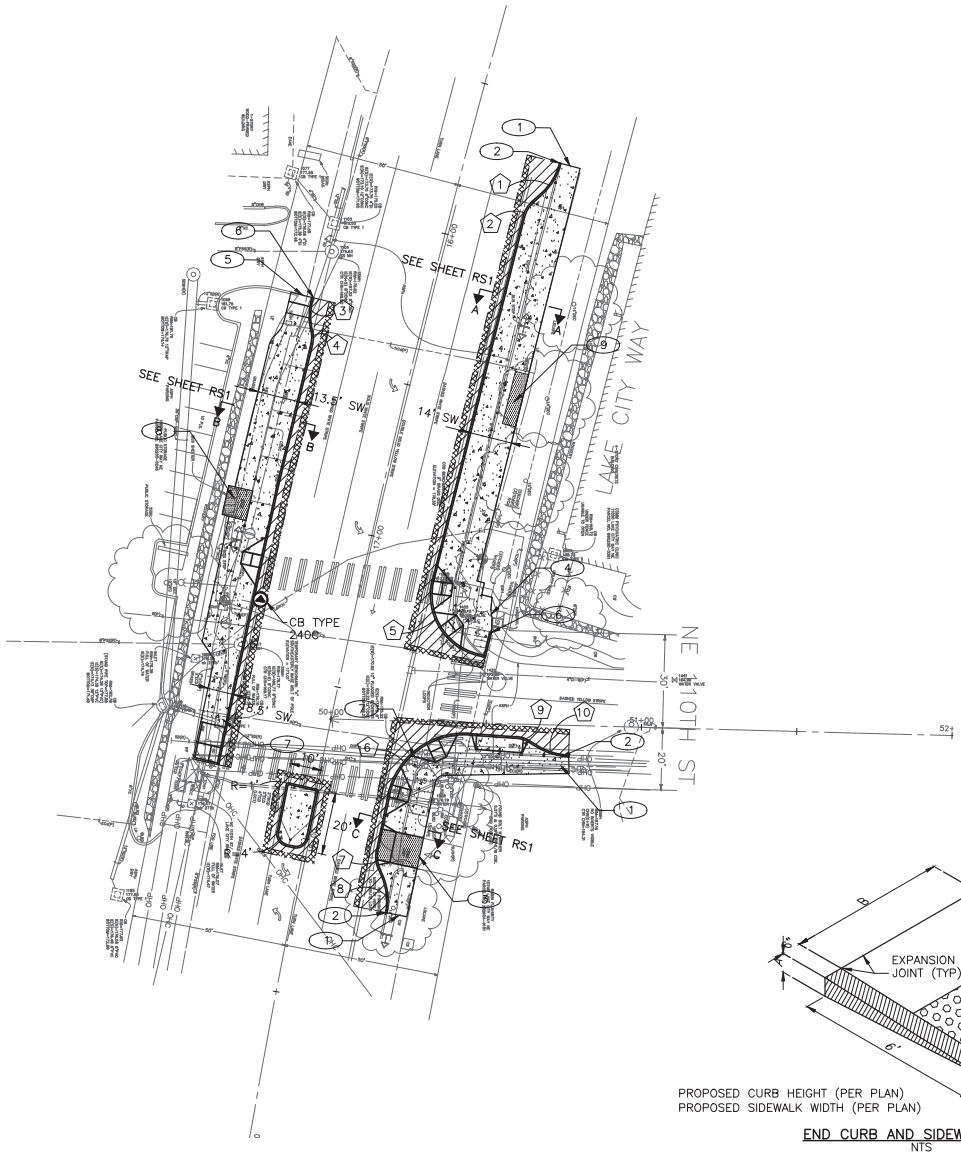

PAVING LEGEND

- DRIVEWAY, CEM CONC, 6" PER STD PLAN 430
- PAVEMENT, 2" HMA CL ½", OVER 11" HMA CL 1", OVER 6" MNRL AGG TYPE 2
- CEM CONC SIDEWALK W/ 25% POZZOLANS, PER STD PLAN 420.
- PAVEMENT, 2" HMA CL ½"
- CURB RAMP W/25% POZZOLANS AND DETECTABLE WARNING, PER STD PLAN 422A.
- CEM CONC CURB PER STD PLAN 410C (H=4").
- SAWCUT RIGID PAVEMENT, FULL DEPTH. SEE SECTION 2-02.3(3)C AND 2-02.3(6)A.

CONSTRUCTION NOTES

1. MATCH EX SIDEWALK/LANDING
2. MATCH EX CURB
3. MATCH EX DRIVEWAY
4. MATCH EX CONC STAIRS
5. END SIDEWALK (SEE DETAIL PV1)
6. END CURB (SEE DETAIL PV1)
7. CAP INLET
8. INSTALL B11 BUS SHELTER FOOTING. SEE KING COUNTY STANDARD SHELTER FOOTING PLANS FOR DETAILS. INSTALL EXISTING BUS SHELTER ON NEW FOOTING IN EXISTING LOCATION.
9. INSTALL B32 BUS SHELTER FOOTING FOR F52 SHELTER FRAME. SEE KING COUNTY STANDARD SHELTER FOOTING PLANS FOR DETAILS.

CURB RETURN SCHEDULE

	PC – STA, OFFSET	PT – STA, OFFSET	RADIUS	LENGTH	Δ	PC	1/4	1/2	3/4	PT
1	15+68.51, 29.89' LT	15+79.62, 26.63' LT	20.00'	11.67'	33.43	175.45	–	–	–	175.54
2	15+82.74, 24.60' LT	15+93.96, 24.92' LT	10.00'	5.93'	33.98	175.71	–	–	–	175.75
3	16+31.53, 35.94' RT	16+40.42, 33.75' RT	20.00'	9.32'	26.69	175.68	–	–	–	175.73
4	16+40.42, 33.75' RT	16+44.87, 32.67' RT	10.00'	5.73'	32.84	175.77	–	–	–	175.85
5	17+09.68, 22.28' LT	17+30.33, 41.78' LT	20.00'	31.41'	89.99	176.05	175.97	175.73	175.38	174.46
6	17+55.71, 44.61' LT	17+80.72, 23.06' LT	25.00'	35.84'	82.13	174.30	175.16	175.57	175.87	175.97
7	17+99.01, 22.98' LT	18+10.57, 48.89' LT	10.00'	6.03'	34.55	176.24	–	–	–	176.28
8	18+07.16, 26.33' LT	18+18.21, 29.74' LT	20.00'	11.64'	33.36	176.19	–	–	–	176.11
9	50+59.71, 4.12' RT	50+64.13, 5.36' RT	10.00'	4.63'	26.52	172.53	–	–	–	171.91
10	50+64.13, 5.36' RT	50+76.83, 9.54' RT	20.00'	10.11'	28.95	171.27	–	–	–	170.57

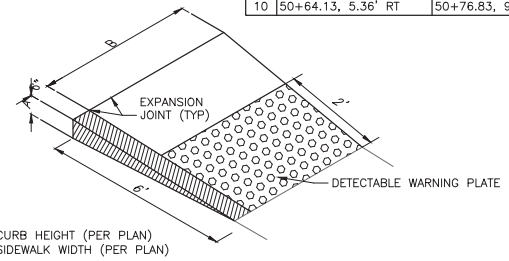

END CURB AND SIDEWALK DETAIL
NTS

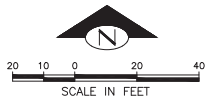

PV1
GRADING PAVING AND DRAINAGE PLAN
LAKE CITY WAY NE

CALL 2 WORKING DAYS BEFORE YOU DIG 1-800-424-5555

60% REVIEW
NOT FOR CONSTRUCTION
OCTOBER 2014

APPROVED FOR ADVERTISING
NANCY LOCKE
DEPARTMENT OF FINANCE & ADMINISTRATIVE SERVICES
SEATTLE, WASHINGTON . . . . . 20 . .
BY: . . . . . .
PURCHASING & CONTRACTING SERVICES DIRECTOR

NAME OR INITIALS AND DATE
DESIGNED .PT. . . . . .
CHECKED. . . . . .
DRAWN . . . . . .
CHECKED .PT . . . . . .

INITIALS AND DATE
REVIEWED:
DES. . . . . CONST. . . . . .
SDOT . . . . . PROJ. MGR. . . . . .
RECEIVED . . . . . .
REVISED AS BUILT . . . . . .

ALL WORK SHALL BE DONE IN ACCORDANCE WITH THE CITY OF SEATTLE STANDARD PLANS AND SPECIFICATIONS AND OTHER DOCUMENTS CALLED FOR IN SECTION 0-02.3 OF THE PROJECT MANUAL.

STATE OF WASHINGTON 51781 REGISTERED PROFESSIONAL ENGINEER

City of Seattle
Seattle Department of Transportation
ORDINANCE NO. . . . . APPROVED. . . . . .
FUND: . . . . . .
SCALE: H. 1"=20', V. 1"=10' INSPECTOR'S BOOK. . . . . .

2015 SIDEWALK DEVELOPMENT AND SRTS – PACKAGE 4

JOB NO. PC TS6068A R/W CO TS6068C
VAULT PLAN NO. XXX-YYY
SHEET 29 OF 42

VAULT SERIAL NO.	DATE	MARK	NATURE REVISIONS	MADE BY	CHK'D	REV'D
ABCDE						

P:\STDrafter\2015 Sidewalks SRTS Program\Trim-CPRS\LAKE CITY WAY\X_PLOT FILES\TS5003A-P-ROAD-LAKE CITY WAY NE.dwg
Oct-23-14 11:56am

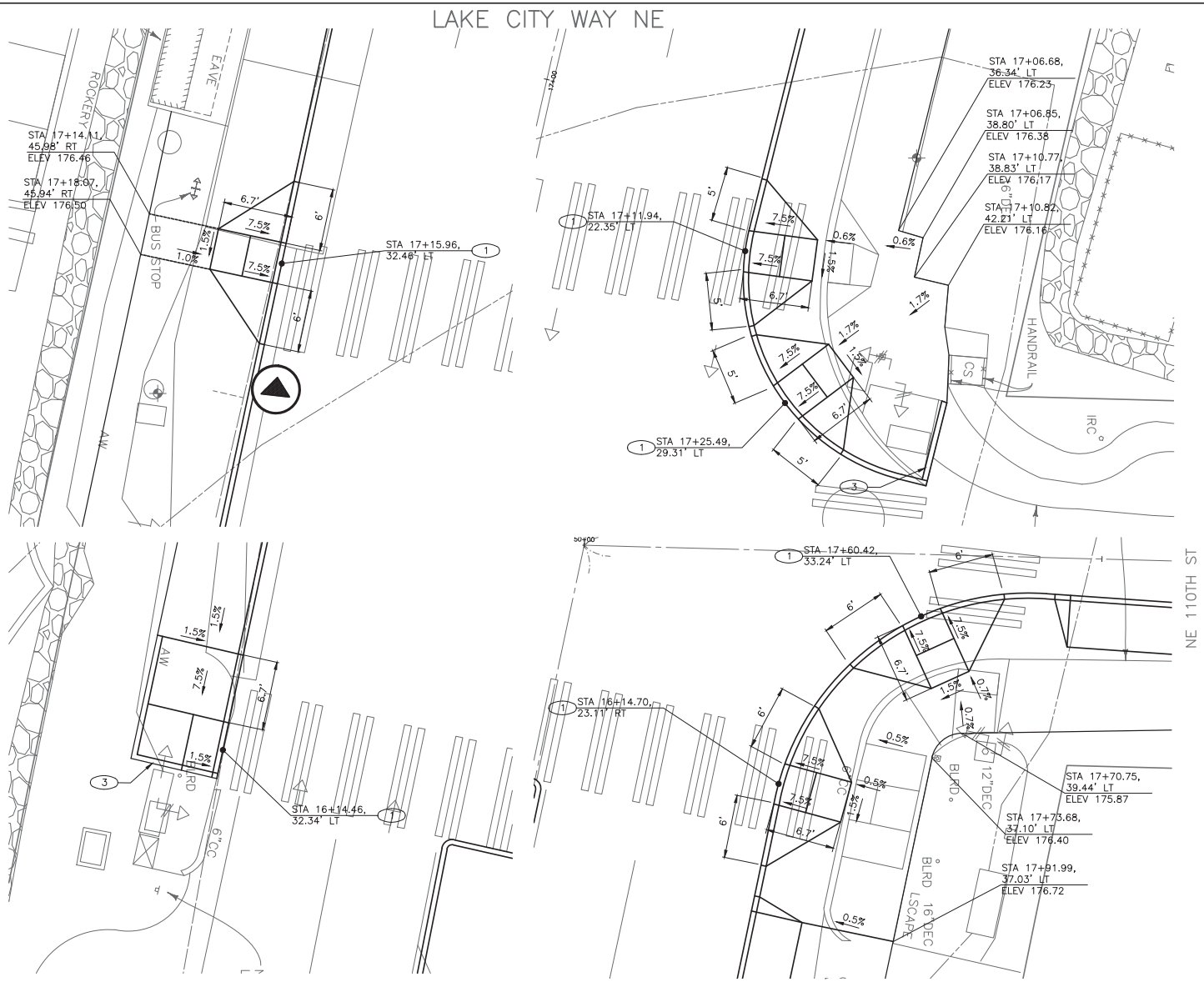

CURB RAMP LEGEND

CURB RAMP (PER STANDARD PLAN 422A)

CONSTRUCTION NOTES

1. CURB RAMP W/ 25% POZZOLANS PER STD PLAN 422A OR NON-STANDARD
2. SAW CEM CONC SIDEWALK, FULL DEPTH, AT EX SCORE LINE
3. CEM CONC RETAINING CURB PER STD PLAN 422b

N

20 10 0 20 40

SCALE IN FEET

CR1

CURB RAMPS

CALL 2 WORKING DAYS BEFORE YOU DIG 1-800-424-5555

60% REVIEW
NOT FOR CONSTRUCTION
OCTOBER 2014

APPROVED FOR ADVERTISING
NANCY LOCKE
DEPARTMENT OF FINANCE & ADMINISTRATIVE SERVICES
SEATTLE, WASHINGTON . . . . . 20 . .
BY: . . . . . .
PURCHASING & CONTRACTING SERVICES DIRECTOR

NAME OR INITIALS AND DATE
DESIGNED PT. . . . . .
CHECKED . . . . . .
DRAWN . . . . . .
CHECKED PT . . . . . .

INITIALS AND DATE
REVIEWED:
DES. . . . . CONST. . . . . .
SDOT . . . . . PROJ. MGR. . . . .
RECEIVED . . . . . .
REVISED AS BUILT . . . . . .

ALL WORK SHALL BE DONE IN ACCORDANCE WITH THE CITY OF SEATTLE STANDARD PLANS AND SPECIFICATIONS AND OTHER DOCUMENTS CALLED FOR IN SECTION 0-02.3 OF THE PROJECT MANUAL.

STATE OF WASHINGTON 51761 REGISTERED PROFESSIONAL ENGINEER

City of Seattle
Seattle Department of Transportation
ORDINANCE NO. . . . . APPROVED. . . . . .
FUND: . . . . . .
SCALE: H. 1"=20', V. 1"=10' INSPECTOR'S BOOK . . . . . .

2015 SIDEWALK DEVELOPMENT AND SRTS – PACKAGE 4

JOB NO.
PC TS6068A
R/W
CO TS6068C
VAULT PLAN NO. XXX-YYY
SHEET 30 OF 42

VAULT SERIAL NO.	DATE	MARK	NATURE REVISIONS	MADE	CHK'D	REV'D
ABCDF						

P:\STDrafter\2015 Sidewalks SRTS Program\Trinh-CPRS\LAKE CITY WAY\A_PLOT FILES\TS5003A-P-CURB-LAKE CITY WAY NE.dwg
Oct-23-14 11:56am

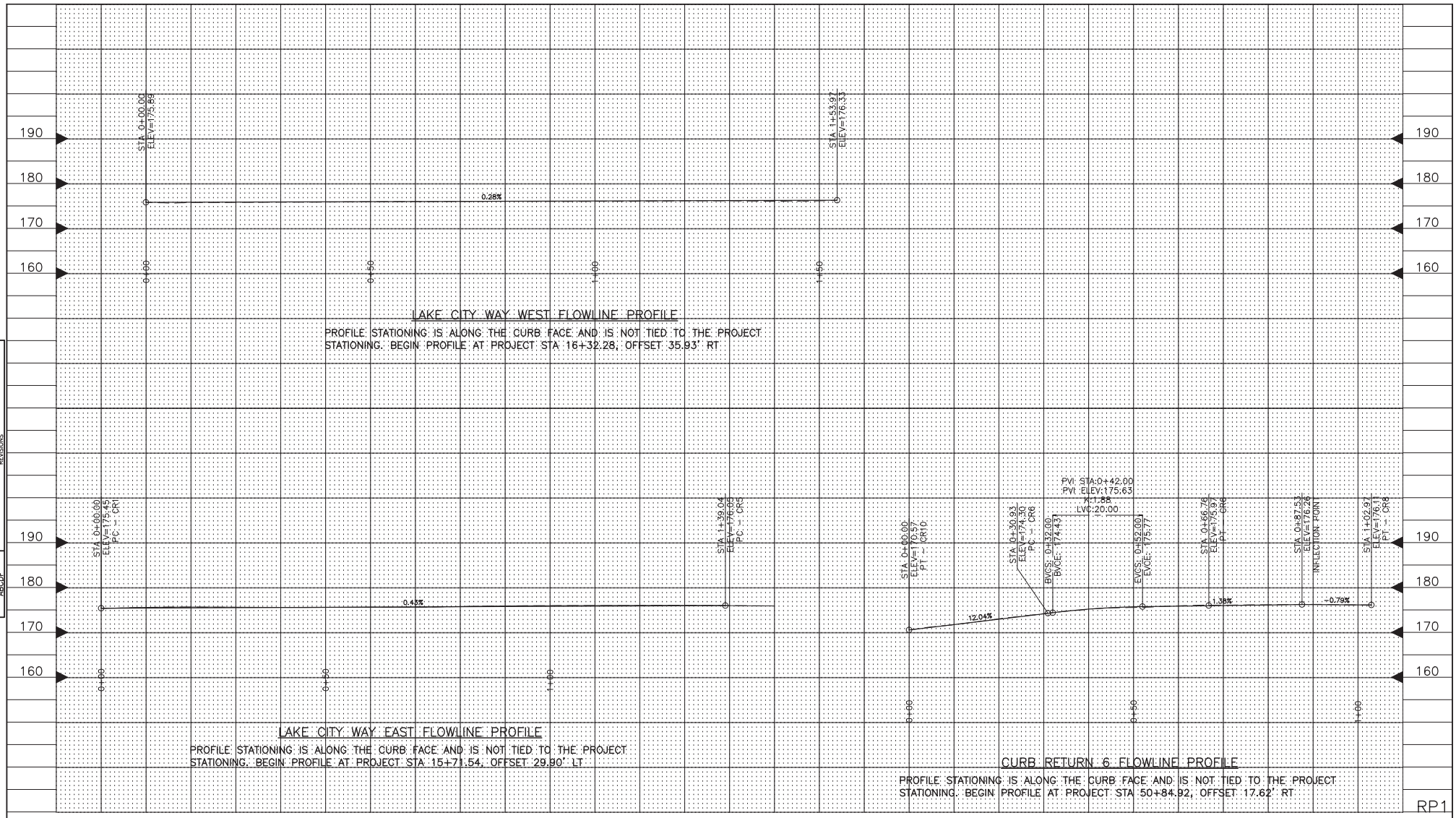

LAKE CITY WAY WEST FLOWLINE PROFILE

PROFILE STATIONING IS ALONG THE CURB FACE AND IS NOT TIED TO THE PROJECT STATIONING. BEGIN PROFILE AT PROJECT STA 16+32.28, OFFSET 35.93' RT

LAKE CITY WAY EAST FLOWLINE PROFILE

PROFILE STATIONING IS ALONG THE CURB FACE AND IS NOT TIED TO THE PROJECT STATIONING. BEGIN PROFILE AT PROJECT STA 15+71.54, OFFSET 29.90' LT

CURB RETURN 6 FLOWLINE PROFILE

PROFILE STATIONING IS ALONG THE CURB FACE AND IS NOT TIED TO THE PROJECT STATIONING. BEGIN PROFILE AT PROJECT STA 50+84.92, OFFSET 17.62' RT

RP1

10 5 0 10 20
SCALE IN FEET

ROADWAY PROFILES
LAKE CITY WAY NE

VAULT SERIAL NO.	DATE	MARK	NATURE REVISIONS	MADE	CHK'D	REV'D
ABCDF						

P:\STDrafter\2015 Sidewalks SRTS Program\Trinh-CPRS\LAKE CITY WAY\A_PLOT FILES\TS5003A-P-RP-LAKE CITY WAY NE.dwg
Oct-23-14 11:56am

CALL 2 WORKING DAYS
BEFORE YOU DIG
1-800-424-5555

60% REVIEW
NOT FOR CONSTRUCTION
OCTOBER 2014

APPROVED FOR ADVERTISING
NANCY LOCKE
DEPARTMENT OF FINANCE & ADMINISTRATIVE SERVICES
SEATTLE, WASHINGTON . . . . . 20 . .
BY: . . . . . .
PURCHASING & CONTRACTING SERVICES DIRECTOR

NAME OR INITIALS AND DATE
DESIGNED PT. . . . . .
CHECKED . - - - . . . . . .
DRAWN . - - - . . . . . .
CHECKED . PT . . . . . .

INITIALS AND DATE
REVIEWED:
DES. . . . . CONST. . . . . .
SDOT . . . . . PROJ. MGR. . . . .
RECEIVED . . . . . .
REVISED AS BUILT . . . . . .

ALL WORK SHALL BE DONE IN ACCORDANCE WITH THE CITY OF SEATTLE STANDARD PLANS AND SPECIFICATIONS AND OTHER DOCUMENTS CALLED FOR IN SECTION 0-02.3 OF THE PROJECT MANUAL.

STATE OF WASHINGTON 51781 REGISTERED PROFESSIONAL ENGINEER

City of Seattle
Seattle Department of Transportation
ORDINANCE NO. . . . . APPROVED. . . . . .
FUND: . . . . . .
SCALE: H. 1"=20', V. 1"=10' INSPECTOR'S BOOK . . . . . .

2015 SIDEWALK DEVELOPMENT AND SRTS – PACKAGE 4

JOB NO. PC TS6068A
R/W
CO TS6068C
VAULT PLAN NO. XXX-YYY
SHEET 31 OF 42

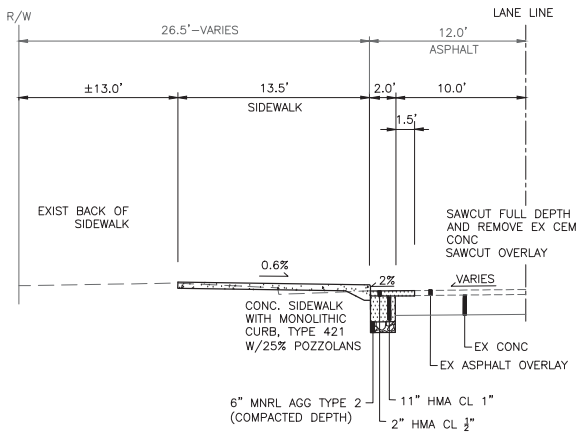

ROADWAY SECTION A–A

LAKE CITY WAY NE
NTS

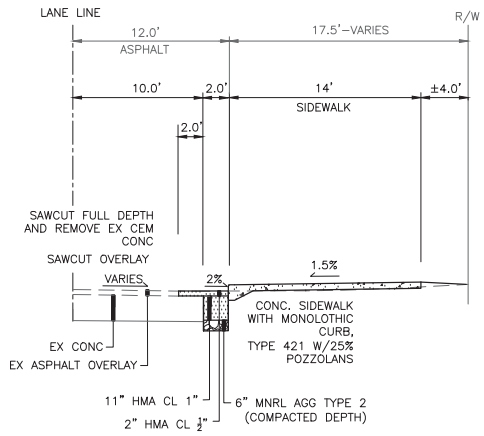

ROADWAY SECTION B–B

LAKE CITY WAY NE
NTS

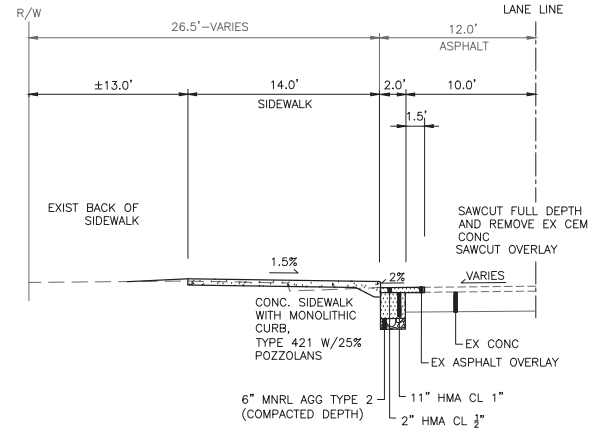

ROADWAY SECTION C–C

LAKE CITY WAY NE
NTS

RS1
ROADWAY SECTIONS
LAKE CITY WAY NE

CALL 2 WORKING DAYS BEFORE YOU DIG 1–800–424–5555

60% REVIEW
NOT FOR CONSTRUCTION
OCTOBER 2014

APPROVED FOR ADVERTISING
NANCY LOCKE
DEPARTMENT OF FINANCE & ADMINISTRATIVE SERVICES
SEATTLE, WASHINGTON . . . . . 20 . .
BY: . . . . . .
PURCHASING & CONTRACTING SERVICES DIRECTOR

NAME OR INITIALS AND DATE
DESIGNED PT. . . . . .
CHECKED . . . . . .
DRAWN . . . . . .
CHECKED PT . . . . . .

INITIALS AND DATE
REVIEWED:
DES. . . . . CONST. . . . . .
SDOT . . . . . PROJ. MGR. . . .
RECEIVED . . . . . .
REVISED AS BUILT . . . . . .
ALL WORK SHALL BE DONE IN ACCORDANCE WITH THE CITY OF SEATTLE STANDARD PLANS AND SPECIFICATIONS AND OTHER DOCUMENTS CALLED FOR IN SECTION 0–02.3 OF THE PROJECT MANUAL.

STATE OF WASHINGTON 51781 REGISTERED PROFESSIONAL ENGINEER

City of Seattle
Seattle Department of Transportation
ORDINANCE NO. . . . . APPROVED. . . . . .
FUND: . . . . . .
SCALE: H. 1"=20', V. 1"=10' INSPECTOR'S BOOK . . . . . .

2015 SIDEWALK DEVELOPMENT AND SRTS – PACKAGE 4

JOB NO. PC TS6068A R/W CO TS6068C
VAULT PLAN NO. XXX–YYY
SHEET 32 OF 42

VAULT SERIAL NO.	DATE	MARK	NATURE REVISIONS	MADE BY	CHK'D	REV'D
ABOVE						

P:\STDrafter\2015 Sidewalks SRTS Program\Trim-CPRS\LAKE CITY WAY\A_PLOT FILES\TS5003A-P-RS-LAKE CITY WAY NE.dwg
Oct-23-14 11:56am

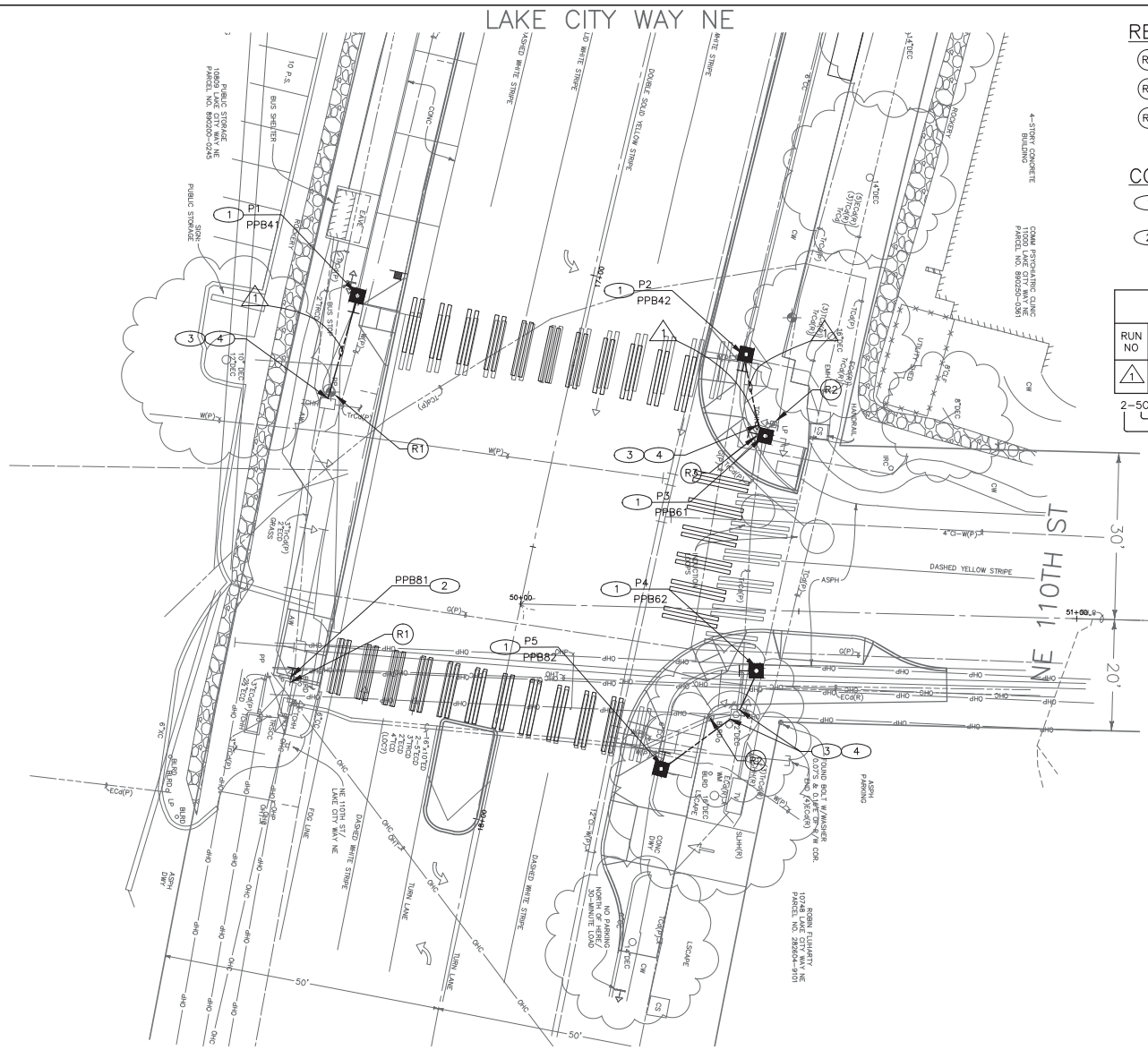

REMOVE/RELOCATE

(R1) REMOVE PEDESTRIAN PUSHBUTTON ASSEMBLY. PLUG HOLES.

(R2) REMOVE PEDESTRIAN PUSHBUTTON ASSEMBLY AND POST.

(R3) RELOCATE EXISTING HANDHOLE

CONSTRUCTION NOTES

(1) FURNISH AND INSTALL ONE PEDESTRIAN PUSHBUTTON POST AND FOUNDATION AND ONE PEDESTRIAN PUSHBUTTON ASSEMBLY PER CITY OF SEATTLE STANDARD PLANS 521 AND 522b.

(2) FURNISH AND INSTALL ONE PEDESTRIAN PUSHBUTTON ASSEMBLY PER CITY OF SEATTLE STANDARD 522b.

WIRING SCHEDULE

RUN NO	SPAN OR CONDUIT SIZE	VEHICLE HEADS	PED HEADS	PPB'S 1PR(SH)	STREET LIGHT	PRE-EMPT	SIGNAL SERVICE	GROUND	COMMENTS
1	1-1"TRCD	–	–	1	– –	– –	– –	– –	–

2-5C -MULTI-CONDUCTOR CABLE
└─NO. OF CONDUCTORS
└─NO. OF CABLES

POLE/PEDESTAL SCHEDULE

POLE NO.	STATION/LOCATION AND OFFSET	POLE TYPE	LENGTH (FT)	FOUNDATION TYPE	MAST ARM LENGTH (FT)	LUMINAIRE ARM LENGTH (FT)	LUMINAIRE WATTAGE	LUMINAIRE MOUNTING HEIGHT (FT)	# OF CABLE OUTLETS	LOCATION OF OUTLETS	CITY LIGHT POLE #
1	XX+XX.XX, RT XX.X'	PPB POST	4.5	PEDESTAL	–	–	–	–	–	–	–
2	XX+XX.XX, RT XX.X'	PPB POST	4.5	PEDESTAL	–	–	–	–	–	–	–
3	XX+XX.XX, RT XX.X'	PPB POST	4.5	PEDESTAL	–	–	–	–	–	–	–
4	XX+XX.XX, RT XX.X'	PPB POST	4.5	PEDESTAL	–	–	–	–	–	–	–
5	XX+XX.XX, RT XX.X'	PPB POST	4.5	PEDESTAL	–	–	–	–	–	–	–

NORTH = 0° AZIMUTH

(PPB) PUSH BUTTON MOUNTING SCHEDULE

PPB NO.	POLE NO.	LOCATION (AZIMUTH)	PHASE	ARROW DIRECTION
41	P1	180	4	RIGHT
42	P2	180	4	LEFT
61	P3	90	6	RIGHT
62	P4	90	6	LEFT
81	–	0	8	LEFT
82	P5	0	8	RIGHT

NORTH = 0° AZIMUTH

N

10 5 0 10 20
SCALE IN FEET

SG1
SIGNALS
– – – –

VAULT SERIAL NO.	DATE	MARK	NATURE REVISIONS	MADE BY	CHK'D	REV'D
ABCDE						

P:\STDnrtw\2015 Sidewalks SRTS Program\Trim-GPRS\RAINIER AVE S\A_PLOT FILES\TS5003A-P-SIGL-LAKE CITY WAY NE.dwg
Oct-23-14 11:57am

CALL 2 WORKING DAYS BEFORE YOU DIG 1-800-424-5555

60% REVIEW
NOT FOR CONSTRUCTION
OCTOBER 2014

APPROVED FOR ADVERTISING
NANCY LOCKE
DEPARTMENT OF FINANCE & ADMINISTRATIVE SERVICES
SEATTLE, WASHINGTON . . . . . 20 . .
BY: . . . . . .
PURCHASING & CONTRACTING SERVICES DIRECTOR

NAME OR INITIALS AND DATE
DESIGNED PT. . . . . .
CHECKED . . . . . .
DRAWN . . . . . .
CHECKED PT . . . . . .

INITIALS AND DATE
REVIEWED:
DES. . . . . CONST. . . . . .
SDOT . . . . . PROJ. MGR. . . . .
RECEIVED . . . . . .
REVISED AS BUILT . . . . . .

ALL WORK SHALL BE DONE IN ACCORDANCE WITH THE CITY OF SEATTLE STANDARD PLANS AND SPECIFICATIONS AND OTHER DOCUMENTS CALLED FOR IN SECTION 0-02.3 OF THE PROJECT MANUAL.

STATE OF WASHINGTON 51781 REGISTERED PROFESSIONAL ENGINEER

City of Seattle
Seattle Department of Transportation
ORDINANCE NO. . . . . APPROVED. . . . . .
FUND: . . . . . .
SCALE: H. 1"=20', V. 1"=10' INSPECTOR'S BOOK. . . . . .

2015 SIDEWALK DEVELOPMENT AND SRTS – PACKAGE 4

JOB NO. PC TS6068A R/W CO TS6068C
VAULT PLAN NO. XXX-YYY
SHEET 33 OF 42

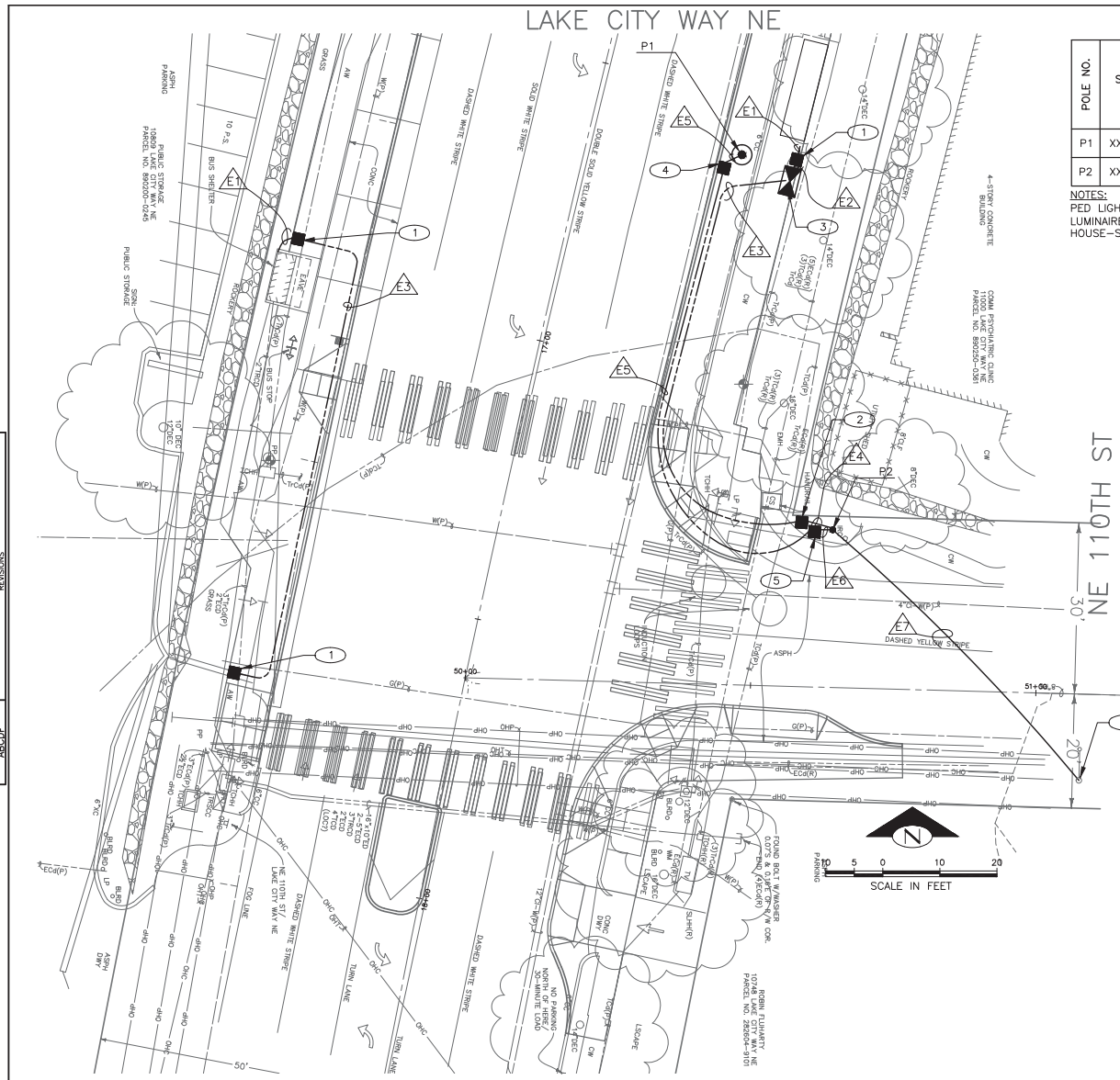

POLE/PEDESTAL SCHEDULE

POLE NO.	STATION/LOCATION AND OFFSET	POLE TYPE	LENGTH (FT)	FOUNDATION TYPE	MAST ARM LENGTH (FT)	LUMINAIRE ARM LENGTH (FT)	LUMINAIRE WATTAGE	LUMINAIRE MOUNTING HEIGHT (FT)	# OF CABLE OUTLETS	LOCATION OF OUTLETS	CITY LIGHT POLE #
P1	XX+XX.XX, RT XX.X'	POST TOP PED LIGHT	14	STD PLAN NO. 543B	–	N/A	70W HPS	14	–	–	–
P2	XX+XX.XX, RT XX.X'	CLASS 1 WOOD	50	7' DEPTH	–	–	–	–	–	–	–

NOTES:
PED LIGHT POLE (APR4–14–B104–GN8TX).
LUMINAIRE (Z15–70HPS–AC–3–120–SFZ4–GN8TX) WITH UTILTY FITTER (SFPH4–PH8–120–GN8TX).
HOUSE–SIDE OF LUMINAIRE SHALL FACE THE CURB.

WIRING SCHEDULE

RUN NO (XX)	SPAN WIRE OR CONDUIT SIZE	SERVICE	STREET LIGHTING	GROUND	REMARKS
E1	1–1" ECD				TO BUS SHELTER LEG
E2	2 – 2" ECD				FUTURE METRO BUS SHELTER LIGHTING
E3	1 – 2" ECD				FUTURE METRO BUS SHELTER LIGHTING
E4	1 – 3" CONDUIT RISER				FUTURE METRO BUS SHELTER LIGHTING
E5	1 – 2" ECD		2–#6	1–#6	PED LIGHTING
E6	1 – 3" CONDUIT RISER		2–#6	1–#6	PED LIGHTING
E7	AERIAL		2–#6	1–#6	PED LIGHTING

2–5C –MULTI–CONDUCTOR CABLE
└─NO. OF CONDUCTORS
└─NO. OF CABLES

CONSTRUCTION NOTES

1. INSTALL NEW TYPE 1 HANDHOLE "KCM".
2. INSTALL NEW TYPE 2 HANDHOLE "SCL".
3. INSTALL BLOCKOUT FOR SERVICE CABINET FOUNDATION (12" X 16").
4. INSTALL NEW TYPE 1 HANDHOLE "SL".
5. INSTALL NEW TYPE 2 HANDHOLE "SL".
6. SERVICE POINT. COORDINATE WITH SCL ELECTRICAL SERVICE REPRESENTATIVE (NORTH).

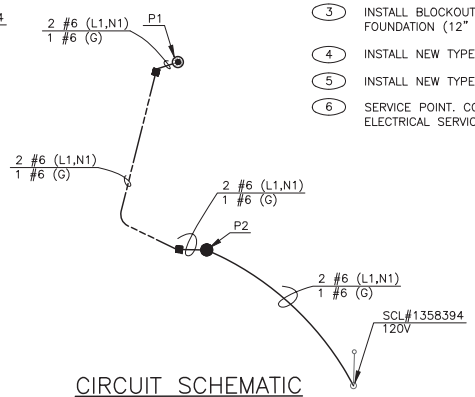

CIRCUIT SCHEMATIC

EL1
ELECTRICAL
LAKE CITY WAY NE

VAULT SERIAL NO.	DATE	MARK	NATURE REVISIONS	MADE BY	CK'D	REV'D
ABCDE						

CALL 2 WORKING DAYS BEFORE YOU DIG 1–800–424–5555

60% REVIEW
NOT FOR CONSTRUCTION
OCTOBER 2014

APPROVED FOR ADVERTISING
NANCY LOCKE
DEPARTMENT OF FINANCE & ADMINISTRATIVE SERVICES
SEATLLE, WASHINGTON . . . . . 20 . .
BY: . . . . . .
PURCHASING & CONTRACTING SERVICES DIRECTOR

NAME OR INITIALS AND DATE
DESIGNED PT. . . . . .
CHECKED . . . . . .
DRAWN . . . . . .
CHECKED . PT . . . . . .

INITIALS AND DATE
REVIEWED:
DES. . . . . CONST. . . . . .
SDOT . . . . . PROJ. MGR. . . . . .
RECEIVED . . . . . .
REVISED AS BUILT . . . . . .

ALL WORK SHALL BE DONE IN ACCORDANCE WITH THE CITY OF SEATTLE STANDARD PLANS AND SPECIFICATIONS AND OTHER DOCUMENTS CALLED FOR IN SECTION 0–02.3 OF THE PROJECT MANUAL.

STATE OF WASHINGTON 45615 REGISTERED PROFESSIONAL ENGINEER

City of Seattle
Seattle Department of Transportation
ORDINANCE NO. . . . . APPROVED. . . . . .
FUND: . . . . . .
SCALE: H. 1"=20', V. 1"=10' INSPECTOR'S BOOK. . . . . .

2015 SIDEWALK DEVELOPMENT AND SRTS – PACKAGE 4

JOB NO. PC TS6068A R/W CO TS6068C
VAULT PLAN NO. XXX–YYY
SHEET 34 OF 42

P:\STDrafter\2015 Sidewalks SRTS Program\Trim-GPRS\LAKE CITY WAY\A_PLOT FILES\TS5003A-P-ELEC-LAKE CITY WAY NE.dwg
Oct-23-14 11:57am

CONSTRUCTION NOTES

(1) RELOCATE EX SIGN (PER COS STD PLAN NO. 620/621).

REMOVAL NOTES

(R1) REMOVE EXISTING SIGNS AND SIGN POSTS

GENERAL NOTES

1. ALL STRIPING IN STANDARD PAINT.

CHANNELIZATION LEGEND

L-8T THERMOPLASTIC 8" CROSSWALK.

INSTALL

REMOVE

N

20 10 0 20 40

SCALE IN FEET

CH1

CHANNELIZATION AND SIGNING

LAKE CITY WAY NE

VAULT SERIAL NO.	DATE	MARK	NATURE REVISIONS	MADE BY	CHK'D	REV'D
ABCDE						

P:\STDrafter\2015 Sidewalks SRTS Program\Trim-CPRS\LAKE CITY WAY\A_PLOT FILES\TS5003A-P-CHAN-LAKE CITY WAY NE.dwg
Oct-23-14 11:57am

CALL 2 WORKING DAYS BEFORE YOU DIG 1-800-424-5555

60% REVIEW
NOT FOR CONSTRUCTION
OCTOBER 2014

APPROVED FOR ADVERTISING
NANCY LOCKE
DEPARTMENT OF FINANCE & ADMINISTRATIVE SERVICES
SEATTLE, WASHINGTON . . . . . 20 . .
BY: . . . . . .
PURCHASING & CONTRACTING SERVICES DIRECTOR

NAME OR INITIALS AND DATE
DESIGNED PT. . . . . .
CHECKED . . . . . .
DRAWN . . . . . .
CHECKED PT . . . . . .

INITIALS AND DATE
REVIEWED:
DES. . . . . CONST. . . . . .
SDOT . . . . . PROJ. MGR. . . . .
RECEIVED . . . . . .
REVISED AS BUILT . . . . . .

ALL WORK SHALL BE DONE IN ACCORDANCE WITH THE CITY OF SEATTLE STANDARD PLANS AND SPECIFICATIONS AND OTHER DOCUMENTS CALLED FOR IN SECTION 0-02.3 OF THE PROJECT MANUAL.

STATE OF WASHINGTON 51781 REGISTERED PROFESSIONAL ENGINEER

City of Seattle
Seattle Department of Transportation
ORDINANCE NO. . . . . APPROVED. . . . . .
FUND: . . . . . .
SCALE: H. 1"=20', V. 1"=10' INSPECTOR'S BOOK . . . . . .

2015 SIDEWALK DEVELOPMENT AND SRTS – PACKAGE 4

JOB NO. PC TS6068A R/W CO TS6068C
VAULT PLAN NO. XXX-YYY
SHEET 35 OF 42