APPENDIX 9B

Standard Drawings for Electrical Design

Contents

1. INTRODUCTION

This appendix presents an example set of SPU Standard Drawings for electrical design.

Drawings and specifications form the bulk of contract documents. They provide detailed information on quantities, size, dimensions, and relationships. A cardinal rule is to avoid duplicating information in specifications and drawings to avoid the possibility for discrepancies.

The following electrical drawings are available from this appendix:

- B-1 Electrical Legend and Abbreviations
- B-2 Electrical Site Plan
- B-3 Electrical One-Line Diagram
- B-4 Electrical and HVAC Plan
- B-5 Electrical Standard Details
- B-6 Electrical Schedule and Details
- B-7 Electrical Schedule and Relining
- B-8 Electrical Flow Meter and Electrical Plan and Riser Diagram

2. LEGEND

The legend is a list of the symbols to be used on SPU electrical design drawings (Figure B-1). The symbols are based on National Electrical Manufacturers Association (NEMA), Industrial Control Systems (ICS), and American National Standards Institute (ANSI) Standard Y32. Where a design requires a symbol not on the legend, that symbol should be added to the legend if it is used on more than one sheet of the design. If it is used on only one sheet, it may be described on that sheet. The standard legend symbols should be used wherever practical to reduce confusion and time spent inventing unnecessary new symbols.

3. ABBREVIATIONS

The abbreviations used on the electrical drawings should be listed on the electrical legend sheet. This avoids confusion with similar abbreviations on sheets prepared by other disciplines. All abbreviations used on electrical drawings should be included in the abbreviations list. Unless a word is used often, it should not be abbreviated.

4. SITE PLAN

Electrical drawings usually include a plan view of the project site and show (**Figure B-2**):

- Relative location of buildings and structures
- Exterior raceways and circuits
- Locations of manholes and handholes
- Exterior lighting
- References to the drawings for buildings and structures that need more detail.

Often, large sites require a scale so small that additional site plans at a larger scale are required to show detail. The single site plan should always be provided, but when the scale of the overall site plan is less than 1 inch = 30 feet, detailed site plans at a larger scale should be provided.

Detailed site plans should always be at the same scale used for process equipment layout, if possible (i.e. 1 inch = 20 feet or larger). The detailed site plans should be used to show all equipment wiring and general lighting. The overall site plan should be used to highlight the locations of switchgear, MCCs, transformers, and the duct bank system, including all manhole and handhole locations. The overall site plan can also be used as a key to the detailed site plans and detailed plans for buildings and structures. For projects with extensive duct banks, it will be necessary to show duct bank and manhole/handhole sections with conduit arrangement on a separate detail drawing.

5. ONE-LINE DIAGRAMS

One- or single-line diagrams are a symbolic representation of the major electrical components of the project and their interconnection (**Figure B-3**). The following information is typically included on one-line diagrams:

1. Power sources, including voltage and available short circuit current
2. Power ratings, voltages, impedances, connections, and grounding methods of all transformers
3. Protective relay types and sensing connections
4. Frame rating, trip rating, and special features of overcurrent and short circuit protection devices
5. Size and type of motor control devices
6. Voltage, enclosure, short circuit, and main bus ampacity ratings of switchgear assemblies, switchboards, MCCs (MCCs), and distribution panelboards
7. Instrumentation, including instrument transformers, instrument switches, voltmeter, and ammeter, with appropriate ratios and ranges
8. Type and location of surge arresters and capacitors
9. Identification of all loads
10. Identification of all distribution system equipment
11. Key interlock systems

12. Function lines to show interaction between components in the system, such as protective device trip functions and restraints.

When an electrical distribution system is too large to be shown on a single drawing, the major components and feeders should be shown on a single drawing. Additional one-line diagrams should be provided for individual MCCs, as required, to show all the loads supplied from them.

6. EQUIPMENT ELEVATIONS

Two-dimensional drawings of switchboards and MCCs should show the general arrangement of components of the assemblies. The elevation drawings are usually nonscale drawings. However, their intent is to determine general space requirements for the assembly, so they need to be laid out using the dimensions of the equipment being specified. The front elevations typically show main service and feeder circuit protective devices, metering, branch circuit protective devices and controllers, terminal board compartments, and future designated space requirements. One problem with equipment elevation drawings is that the final equipment elevation provided by the manufacturer will likely differ from the electrical design engineer's elevation because suppliers vary. It is possible to eliminate these elevations if the electrical design engineer ensures adequate space is provided for the equipment.

7. BUILDING FLOOR PLANS

Two types of building floor plans are used to depict the electrical requirements for buildings and enclosed structures: the *facility* plan and the *process* plan. Although the entire electrical design can be shown on a single drawing when facility and process requirements are minimal, it is often preferable to separate floor plans by the kind of work involved. This design method makes floor plans less crowded and easier to read.

The electrical building floor plans show the general location of equipment to be wired and connected under the electrical specifications, as well as the necessary conductors and raceways associated with the work. Symbols used on the drawings are usually not to scale but, by definition, tell the contractor how a particular device is to be connected to the electrical system.

Several different techniques may be used for "home run" designations and for defining conductor and conduit requirements. In some cases, the conductor and conduit requirements are called out by the symbol used (as defined in the legend). In others, the specific requirements are shown on the drawings. In still other cases, a code is used. The code definition can be either a small circuit callout list located on the drawing or a more complete circuit and raceway schedule for the entire project. The circuit codes and circuit names must be developed for each specific project. See **Figure B-4** for a building floor plan for electrical.

8. FACILITY PLANS

Facility plans show lighting, general purpose outlets, special system equipment, connections to HVAC equipment, and miscellaneous power requirements directly related to a building or structure. The plans identify and locate luminaire types and special purpose outlets and power connections and locate general purpose outlets. All conduit and conductor requirements associated with this equipment are shown on the plans. All panelboards and equipment from which the above luminaires, outlets, and power connections receive their power supply should be shown on the drawings, or the drawings that show them must be referenced. See **Figure B-4** for a facility plan for electrical.

Note: For offices, administration buildings, and other similar facilities, it may be necessary to add a third set of floor plans to show only special systems.

9. PROCESS PLANS

All electrical equipment and control devices and electrical connections to process equipment, equipment control panels, and instrumentation are shown on the process plans. Electrical process plans should be prepared using the mechanical process equipment plans as a base. The process equipment should be screened so that the electrical equipment, connections, and circuits stand out on the drawings. There are several ways to present process plans, depending on project complexity:

- **Home runs.** Process equipment and devices are shown, along with home runs indicating wiring requirements similar to facility plans.
- **Locations only.** When a separate raceway schedule is produced, the process plans may show only equipment locations. When this approach is used, it is important to show the pullboxes and other nodes that are listed in the raceway schedule.
- **Complete single-line routing**. Some projects may require that all conduits be shown their full length in single-line form. This can become very difficult where large numbers of conduits intersect or converge. Blow-ups of these areas will be required.

Whatever type of presentation is used, it is the electrical design engineer's responsibility to ensure that conduits can be routed in the spaced available. It is often advisable to show electrical "rights-of-way" on the process plans to reserve adequate space for conduits. Even though actual conduits are not shown on the process plans, the electrical design engineer must consider physical limits and develop a concept for raceway routing and installation. Additional blow-ups and details may be required to convey the design concept to the contractor.

10. BUILDING SECTIONS

For process facilities, it is often helpful to develop one or more building sections that show typical raceway routings and equipment locations.

11. INSTALLATION DETAILS

Installation details illustrate specific requirements an electrical design engineer has in mind for construction, installation, or connection of equipment or materials that are better shown by a drawing than by wordy specifications. Many installation details are provided in the standard drawing package and should be used whenever possible. If the design engineer encounters a unique situation that requires a special detail, they should prepare a new detail using materials equivalent to those used in the standard detail and then have the detail reviewed for constructability and compatibility. The details to be used should always be referenced on the plan drawings by either notes or symbols. Where possible, details should include notes to indicate the area and/or circumstances where they apply. See **Figures B-5 and B-6** for electrical standard details and partial plans and details.

12. CONTROL DIAGRAMS

The electrical control diagram is a schematic for an equipment supplier and contractor and shows how a system is controlled. The presentation of electrical control schematics varies widely from project to project. For water and wastewater facilities, control diagrams generally are for motor starters installed as part of an electrical system. Control diagrams or schematics for other equipment, such as I&C panels, are then included with I&C drawings. For more detailed designs, all control diagrams may be combined and presented in a common format. In some cases, these more detailed control diagrams will not be fully prepared at the time of bid. In such cases it may be necessary to prepare typical motor control diagrams so that the bidders can accurately estimate the cost of the motor starters.

Generally, control diagrams should show all devices to be located on the starter or contactor and all field-installed devices. Control logic that is provided in a remotely located control panel should be shown as a terminal connection. All interfaces with remote equipment should be clearly shown, using appropriate symbols, and clearly identified. See **Figure B-7** for an electrical control diagram.

13. INTERCONNECTION DIAGRAMS

A more detailed design may require interconnection diagrams for all I&C field wiring. These diagrams typically show the termination information for all field (interconnecting) wiring between panels and equipment. Several formats are used for interconnection diagrams. In some cases, a tabulation called a *wire list* may be used instead of an actual drawing.

14. CABLE BLOCK DIAGRAMS

Cable block diagrams (CBDs) are a design tool used to define wiring requirements. Generally, CBDs are organized on a loop or equipment basis and show all wiring requirements for that loop. They do not show conduits or routing.

15. RISER DIAGRAMS

In SPU and Seattle City Light, riser diagrams are used to show power pole and conduits for service drops. See **Figure B-8** for an electrical flow meter plan and riser diagram.

Riser diagrams are schematic representations, usually in a vertical format, that show communication or fire alarm systems and related devices. For instance, the base of the diagram will start with the main fire alarm panel and have separate upward branches for smoke detectors and strobe devices for each successive floor or room.

16. OTHER DRAWINGS

Electrical drawings must be consistent with and reference other related drawings. For example, conduit penetrations through concrete floors must be mentioned on the structural drawings so that the conduits are put in place before a slab is poured. Civil, mechanical, I&C, and structural drawings may all need to be referenced.

The need to reference other discipline drawings makes electrical drawings susceptible to changes by others. It is one reason the electrical design engineer is often last to finish.

ELECTRICAL LEGEND

SYMBOL	DESCRIPTION
X	CONDUIT AND CONDUCTOR CALLOUT PER CONDUIT AND CABLE SCHEDULE
	CONNECTION POINT TO EQUIPMENT SPECIFIED. FURNISHED AND INSTALLED UNDER OTHER DIVISIONS. RACEWAY CONDUCTOR AND CONNECTION IN THIS SECTION.
SPD	SURGE PROTECTIVE DEVICE
MCC–A	MAJOR ELECTRICAL COMPONENT OR DEVICE – NAME OR IDENTIFYING SYMBOL AS SHOWN.
	BRANCH CIRCUIT PANEL BOARD
UH1	UNIT HEATER
TTC	TELEPHONE TERMINAL CABINET
TJB	TERMINAL JUNCTION BOX
5 M	MOTOR, SQUIRREL CAGE INDUCTION, HORSEPOWER INDICATED
	WIRE PIGTAIL
X Y	LUMINAIRE, SEE SCHEDULE
z X Y 4 X Y	WALL MOUNTED LUMINAIRE, SEE SCHEDULE
X Y	EMERGENCY LIGHT FIXTURE
X Y	EXIT LIGHTS, SEE SCHEDULE X – INDICATES FIXTURE TYPE PER LIGHTING FIXTURE SCHEDULE Y – INDICATES CIRCUIT NUMBER FROM PANELBOARD z – INDICATES CONTROLLING SWITCH
	HOME RUN
	EXPOSED CONDUIT
	EMBEDDED OR CONCEALED CONDUIT; INTERLOCK
	BURIED CONDUIT
	REINFORCED CONCRETE–ENCASED CONDUITS
	CONCRETE–ENCLOSED GROUND WIRE

NOTE:
ALL POWER AND AC CONTROL CONDUITS AND CABLES SHALL INCLUDE A GROUND WIRE. PROVIDE GROUND WIRE IN DC CIRCUITS WHERE REQUIRED.

SYMBOL	DESCRIPTION
	CONDUIT DOWN
	CONDUIT UP
	CONDUIT, STUBBED AND CAPPED AS SHOWN
[X###]	RACEWAY – CONDUCTOR TAG X= P– POWER 0–600V S– SIGNAL DC CONTROL C– SIGNAL AC CONTROL U– UTILITY T– TELEPHONE TV– CABLE TV D– DATA HIGHWAY F– FIRE ALARM
S^{A}_{3}	WALL SWITCH. SWITCH DESIGNATORS: 2– DOUBLE POLE — A, B, C – ASSOCIATED FIXTURE 3–THREE WAY — P– PILOT LIGHT 4– FOUR WAY — K– KEY OPERATED WP– WEATHERPROOF — D– DIMMER S– SAFETY (20A) — CRE– CORROSION RESISTANT MC–MOMENTARY CONTACT
S_M	MANUAL MOTOR STARTER SWITCH

NOTE:

THIS IS A STANDARD LEGEND SHEET. SOME SYMBOLS OR ABBREVIATIONS MAY APPEAR ON THIS SHEET AND NOT ON THE PLANS. SOME SYMBOLS & ABBREVIATIONS APPEAR ON THE PLANS MAY BE AS WELL FOUND IN I&C LEGENDS SHEET.

SYMBOL	DESCRIPTION
Y	CONVENIENCE RECEPTACLE – DUPLEX UNLESS SPECIFIED OTHERWISE , 120V, 20A. Y INDICATES CIRCUIT NUMBER FROM PANELBOARD
	CONVENIENCE RECEPTACLE, PEDESTAL, DUPLEX SINGLE FACE UNLESS INDICATED OTHERWISE WP–WEATHERPROOF — C– CLOCK HANGER TL– TWIST LOCK — CRE–CORROSION RESISTANT
30	RECEPTACLE – 208V, 1 PH, AMPERAGE INDICATED (250V, NEMA 6–*R) * = AMPERAGE
30	RECEPTACLE, SPECIAL PURPOSE: AMPS INDICATED
	TELEPHONE RECEPTACLE (OUTLET BOX ONLY) WALL MOUNTED
C	COMPUTER NETWORK CONNECTION BOX
J OR HH	GENERAL CONTROL OR WIRING DEVICE. LETTER SYMBOLS OR ABBREVIATIONS INDICATE TYPE OF DEVICE.
CS	CONTROL STATION: TYPE PUSH BUTTONS & SWITCHES REQUIRED, SEE CONTROL DIAGRAMS.
30	NONFUSED DISCONNECT SWITCH, SIZE INDICATED. 3 POLE UNLESS INDICATED OTHERWISE.
60/40 F	FUSED DISCONNECT SWITCH, SIZE INDICATED (60/40, 60 = SWITCH RATING: 40 = FUSE RATING). 3 POLE UNLESS INDICATED OTHERWISE.
VFD	VARIABLE FREQUENCY DRIVE. SEE CONTROL DIAGRAM.
2	COMBINATION (FUSE OR CIRCUIT BREAKER AS INDICATED) MAGNETIC STARTER, NEMA SIZE INDICATED, SEE CONTROL DIAGRAM.
F	FIRE ALARM STATION, MANUAL
F	FIRE ALARM BELL AND STROBE
FI	AIR DUCT SMOKE DETECTOR IONIZATION
S	SMOKE DETECTOR
K	MECHANICAL INTERLOCK (KIRK–KEY TYPE)
	WARNING BELL
	GROUNDING ROD
M	METER; KWH OR KWHD AS INDICATED
(3)	CURRENT TRANSFORMER, NUMBER INDICATED
G	CONNECTION POINT GROUND
N	NEUTRAL
	2 POSITION SWITCH
A	INDICATING LIGHT, PUSH–TO–TEST, LETTER INDICATES COLOR
A	INDICATING LIGHT – LETTER INDICATES COLOR A AMBER — G GREEN B BLUE — R RED C CLEAR — W WHITE

SYBMOL	DESCRIPTION
	CONTACT – NORMALLY OPEN
	CONTACT – NORMALLY CLOSED
	OVERLOAD RELAY HEATER
1	MAGNETIC STARTER WITH NEMA SIZE INDICATED
100/M	CIRCUIT BREAKER, MAGNETIC TRIP ONLY, FRAME SIZE SHOWN, 3 POLE UNLESS INDICATED OTHERWISE.
400	CIRCUIT BREAKER, THERMAL MAGNETIC TRIP SHOWN, 3 POLE UNLESS INDICATED OTHERWISE.
E	ELECTRICALLY OPERATED CIRCUIT BREAKER
100	SWITCH – CURRENT RATING INDICATED, 3 POLE UNLESS INDICATED OTHERWISE.
225	FUSE – RATING INDICATED
XXXX AT XXXX AF	DRAWOUT CIRCUIT BREAKER, LOW VOLTAGE
	SURGE ARRESTER
	GROUND
120V OR 120/240V 15 KVA 1 PH	TRANSFORMER, SECONDARY VOLTAGES, PHASE AND RATING INDICATED AS APPLICABLE
GFR 25A 0.1	PICK–UP SETTING TIME CURRENT CHARACTERISTIC } GROUND FAULT RELAY WITH CT
	} PUSH–BUTTON SWITCH, MOMENTARY CONTACT, NORMALLY OPEN
	} PUSH–BUTTON SWITCH, MOMENTARY CONTACT, NORMALLY CLOSED
OFF ON AUTO XOO OOX OOX	SELECTOR SWITCH – MAINTAINED CONTACT – (–––) IDENTIFIES OPERATION: X – CLOSED CONTACT O – OPEN CONTACT
	THERMAL SWITCH
X	M = MAGNETIC CONTACTOR C = CONTROL RELAY TD = TIME DELAY RELAY
TD	TIME DELAY CONTACT NORMALLY CLOSED
TDR TC OR TDR TO	} TIME DELAY RELAY CONTACT (TIME ACTION INDICATED)
	NORMALLY CLOSED LEVEL SWITCH, OPEN ON RISING LEVEL
	NORMALLY OPEN LEVEL SWITCH, CLOSE ON RISING LEVEL
	HEAT TRACE

ABBREVIATIONS

ABBREV	DESCRIPTION
A	AMMETER, AMPERE, AMBER
AC	ALTERNATING CURRENT
AF	AMPERE FRAME
AFF	ABOVE FINISHED FLOOR
AFG	ABOVE FINAL GRADE
AT	AMPERE TRIP
ATS	AUTOMATIC TRANSFER SWITCH
AUX	AUXILIARY
BC	BARE COPPER
C	CONDUIT,CONTACTOR,CONDULET
CB	CIRCUIT BREAKER
CC	CONTROL CABLE
CKT	CIRCUIT
CL	CLOSE
CO	CONDUIT ONLY
COMM	COMMUNICATION
COS	CITY OF SEATTLE
CP	CONTROL PANEL
CPT	CONTROL POWER TRANSFORMER
CR	CONTROL RELAY
CS	CONTROL STATION
CSO	COMBINED SEWER OVERFLOW
CT	CURRENT TRANSFORMER
CU	COPPER WIRE
CTL	CENTURYLINK
DC	DIRECT CURRENT
DIV	DIVISION
DS	DISCONNECT SWITCH
E	EMPTY, ELECTRIC CONDUIT
ECB	ELECTRICAL CABLE
ECD	ELECTRICAL CONDUIT
ECP	ENVIRONMENTAL CONTROL PANEL
EF	EXHAUST FAN
EL	ELEVATION
ETM	ELAPSED TIME METER
EXST,EX	EXISTING
EP	EXPLOSION PROOF
F, FU	FUSE
FAP	FIRE ALARM PANEL
FE	FLOW ELEMENT
FT	FLOW TRANSMITTER
FLUOR	FLUORESCENT
FVNR	FULL VOLTAGE NON–REVERSING
FVR	FULL VOLTAGE REVERSING
FV	FLOW VALVE
G	GREEN, GROUND
GFI	GROUND FAULT INTERRUPTER
GND	GROUND
HH	HANDHOLE
HID	HIGH INTENSITY DISCHARGE
HPS	HIGH PRESSURE SODIUM
HS	HAND SWITCH
HVAC	HEATING, VENTILATING & AIR CONDITIONING
I&C	INSTRUMENTATION AND CONTROL
INST	INSTANTANEOUS
J,JB	JUNCTION BOX
KWH	KILOWATT HOUR
KWHD	KILOWATT HOUR DEMAND
L	LIGHTING CONTACTOR, LOW SPEED
LB	CONDULET BEND
LCP	LOCAL CONTROL PANEL
LE	LEVEL ELEMENT
LT	LEVEL TRANSMITTER
LOS	LOCKOUT STOP PUSH BUTTON
LS	LEVEL SWITCH
MTS	MANUAL TRANSFER SWITCH

ABBREV	DESCRIPTION
M	MAGNETIC CONTACTOR COIL, MAGNETIC TRIP
MCCB	MOLDED CASE CIRCUIT BREAKER
MCC	MOTOR CONTROL CENTER
MCP	MAIN CONTROL PANEL
MD	MOTORIZED DAMPER
MH	MAINTENANCE HOLE
MFR	MANUFACTURER
MIN	MINIMUM
MS	MOTOR STARTER
MSC	MFR SUPPLIED CABLE
N/NEU	NEUTRAL
NC	NORMALLY CLOSED
NO	NORMALLY OPEN
OL	OVERLOAD RELAY
P	PUMP
PE	PRESSURE ELEMENT
PT	PRESSURE TRANSMITTER
PB	PULL BOX
PC	PHOTOCELL
PDP	POWER DISTRIBUTION PANEL
PDM	POWER DATA MONITOR
PH	PHASE
PNL	PANEL
PP	PUMP PANEL
PS	PRESSURE SWITCH
PSC	PUMP STARTS COUNTER
PT	POTENTIAL TRANSFORMER
PVC	POLYVINYL CHLORIDE CONDUIT
PVC–RGS	PVC COATED RIGID GALVANIZED STEEL CONDUIT
R	RED
REC	RECEPTACLE
RDM	REMOTE DISPLAY MODULE
RGS	RIGID GALVANIZED STEEL CONDUIT
RT	REMOTE TELEMETRY
RTC	REAL TIME CONTROL
RTU	REMOTE TRANSMISSION UNIT
RVSS	REDUCED VOLTAGE SOLID STATE STARTER
SA	SURGE ARRESTOR
SC	SPEED CONTROL
SCL	SEATTLE CITY LIGHT
SD	SMOKE DETECTOR
SS	SOFT START
SST	STAINLESS STEEL
SV	SOLENOID VALVE
SW	SWITCH
SWGR	SWITCHGEAR
T	THERMOSTAT
TC	TIME CLOCK, TIME CLOSE
TCD	TELEMETRY CONDUIT
TD	TEMPERATURE DETECTOR RELAY, TIME DELAY
TDR	TIME DELAY RELAY
TEL	TELEPHONE BACKBOARD
THM	THERMAL SWITCH
TJB	TERMINAL JUNCTION BOX
TO	TIME OPEN
TS	TEMPERATURE SWITCH
TSP	TWISTED SHIELDED PAIR
TST	TWISTED SHIELDED TRIAD
TVSS	TRANSIENT VOLTAGE SURGE SUPPRESSOR
TYP	TYPICAL
UH	UNIT HEATER
UVR	UNDER VOLTAGE RELAY
V	VOLTMETER, VOLT
VFD	VARIABLE FREQUENCY DRIVE
VSC	VENDOR SPECIFIED CABLE
W	WATT
WHD	WATTHOUR DEMAND METER
WP	WEATHERPROOF
XFMR	TRANSFORMER
XP	EXPLOSION–PROOF

FIGURE B–1
ELECTRICAL LEGEND AND ABBREVIATIONS

VAULT SERIAL NO.	DATE	MARK	NATURE REVISIONS	MADE	CHK'D	REV'D

P:\EGD\SPU & CGS Standard\SPU Ch9_DS_Guidelines\Plot_Files\B-1 N723301_EL_Legend-Abbreviations_P.dwg
Xrefs: | INST-ELE_LEGEND-ABBREV |
lec Dec-03-15 3:11pm
Layout Tab: 1 N723301_EL_Legend-Abbreviations

0 ½ 1
IF THIS BAR DOES NOT MEASURE 1" THEN DRAWING IS NOT PLOTTED TO ORIGINAL SCALE.

APPROVED FOR ADVERTISING
FRED PODESTA
DEPARTMENT OF EXECUTIVE ADMINISTRATION
SEATTLE, WASHINGTON 20

BY:
DIRECTOR, CONTRACTING SERVICES

NAME OR INITIALS AND DATE
DESIGNED
CHECKED
DRAWN CCH
CHECKED

INITIALS AND DATE
REVIEWED:
DES. CONST.
SDOT PROJ. MGR.
RECEIVED
REVISED AS BUILT

ALL WORK DONE IN ACCORDANCE WITH THE CITY OF SEATTLE STANDARD PLANS AND SPECIFICATIONS AND OTHER DOCUMENTS CALLED FOR IN SECTION 0-02.3 OF THE PROJECT MANUAL.

Seattle Public Utilities
City of Seattle
Chuck Clarke, Director
ORDINANCE NO.
FUND:
SCALE: NONE
APPROVED
INSPECTOR'S BOOK

SEATTLE PUBLIC UTILITIES
DESIGN STANDARDS AND GUIDELINES

JOB NO. PC N723301 R/W CO
DRAWING NO.
SHEET B–1 OF 8

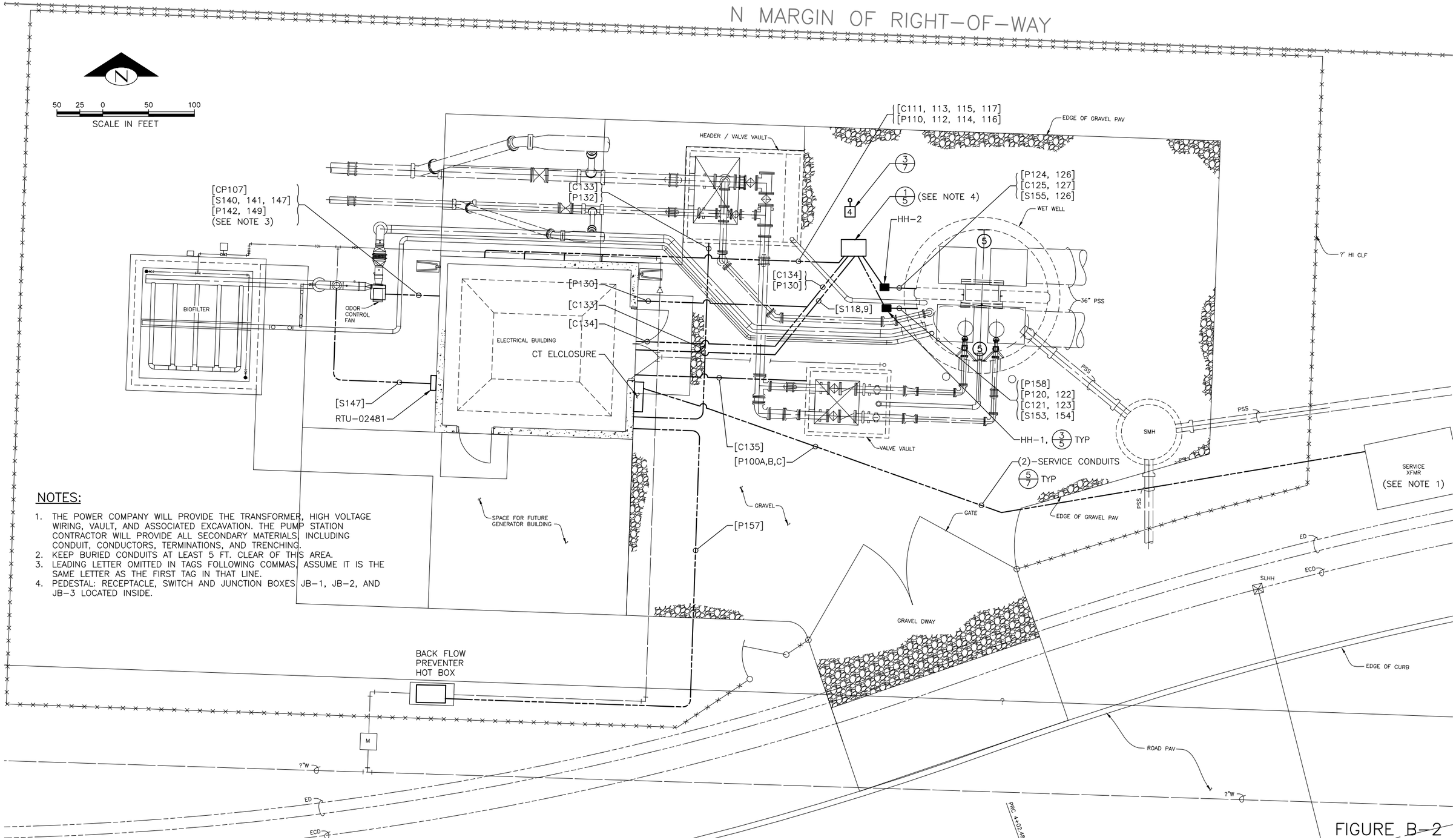

NOTES:

1. THE POWER COMPANY WILL PROVIDE THE TRANSFORMER, HIGH VOLTAGE WIRING, VAULT, AND ASSOCIATED EXCAVATION. THE PUMP STATION CONTRACTOR WILL PROVIDE ALL SECONDARY MATERIALS, INCLUDING CONDUIT, CONDUCTORS, TERMINATIONS, AND TRENCHING.
2. KEEP BURIED CONDUITS AT LEAST 5 FT. CLEAR OF THIS AREA.
3. LEADING LETTER OMITTED IN TAGS FOLLOWING COMMAS, ASSUME IT IS THE SAME LETTER AS THE FIRST TAG IN THAT LINE.
4. PEDESTAL: RECEPTACLE, SWITCH AND JUNCTION BOXES JB-1, JB-2, AND JB-3 LOCATED INSIDE.

FIGURE B-2
ELECTRICAL SITE PLAN

VAULT SERIAL NO.	DATE	MARK	NATURE REVISIONS	MADE	CHK'D	REV'D

P:\EEGD\SPU & COS Standard\SPU Ch9_DS_Guidelines\Plot_Files\B-2 N723301_EL_SitePlan_P.dwg
Xrefs: | N723301_EL_Plan | N723301_BS00 |
lec Sep-10-15 8:59am
Layout Tab: 2 N723301_EL_SitePlan_P

0 ½ 1
IF THIS BAR DOES NOT MEASURE 1" THEN DRAWING IS NOT PLOTTED TO ORIGINAL SCALE.

APPROVED FOR ADVERTISING
FRED PODESTA
DEPARTMENT OF EXECUTIVE ADMINISTRATION
SEATTLE, WASHINGTON 20

BY:
DIRECTOR, CONTRACTING SERVICES

NAME OR INITIALS AND DATE	INITIALS AND DATE
DESIGNED	REVIEWED: DES. CONST. SDOT PROJ. MGR.
CHECKED	
DRAWN CCH	RECEIVED
CHECKED	REVISED AS BUILT

ALL WORK DONE IN ACCORDANCE WITH THE CITY OF SEATTLE STANDARD PLANS AND SPECIFICATIONS AND OTHER DOCUMENTS CALLED FOR IN SECTION 0-02.3 OF THE PROJECT MANUAL.

Seattle Public Utilities
City of Seattle
Chuck Clarke, Director
ORDINANCE NO. APPROVED
FUND:
SCALE: 1" = 50' INSPECTOR'S BOOK

SEATTLE PUBLIC UTILITIES
DESIGN STANDARDS AND GUIDELINES

JOB NO. PC N723301
R/W
CO
DRAWING NO.
SHEET B-2 OF 8

LOAD (KVA)	INITIAL	ULTIMATE
CONNECTED	36	427
OPERATING	29.5	277

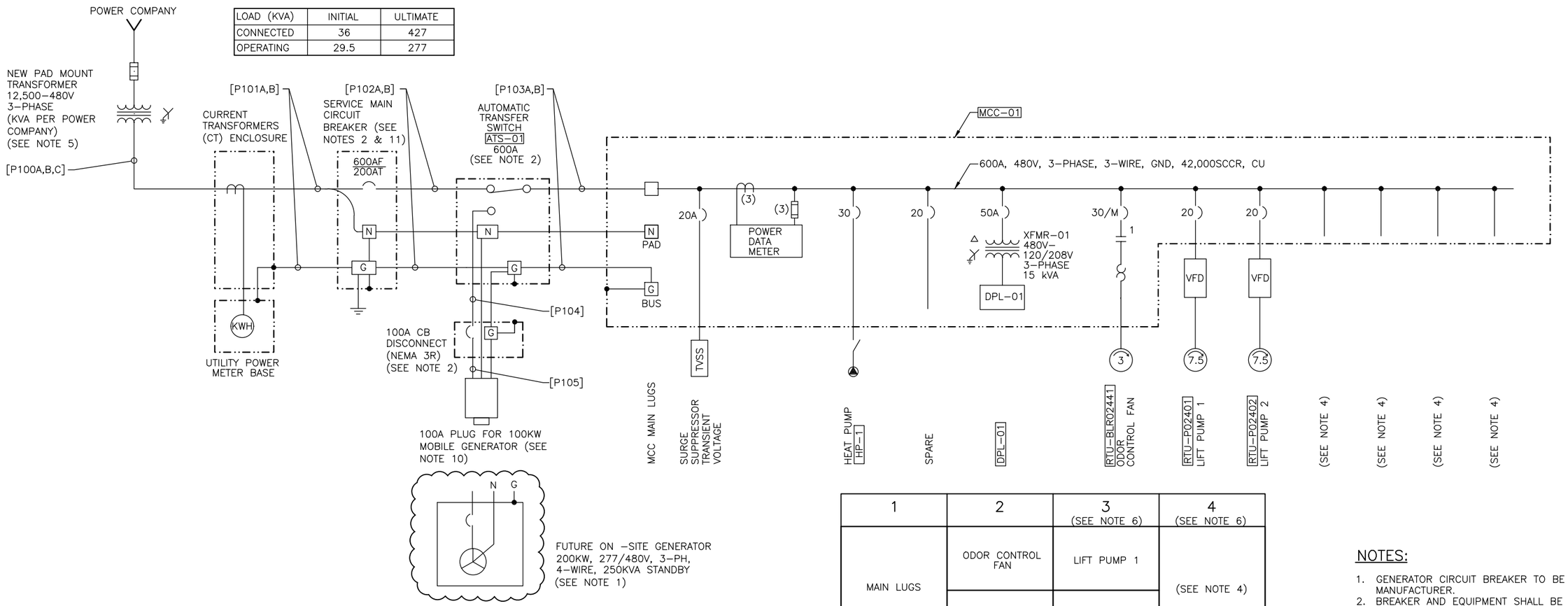

PANEL: DPL–01

VOLTAGE: 208/120	PANEL BUS: 100 AMPS	SERVICE RATED: NO
PHASE, WIRES: 3, 4	MAIN: 60A BREAKER	NEUTRAL: BONDED
SCR (AMPS): 10,000	125% OF MAX BUS LOAD: 20 AMPS	MOUNTING: IN MCC
SOURCE: MCC, 15KVA XFMR	TOTAL LOAD: 4.7 KVA	FEED: TOP/BOTTOM

DESCRIPTION	KVA	CB	CKT	A	B	C	CKT	CB	KVA	DESCRIPTION
INSIDE LIGHTS	0.3	20/1	1	3.3			2	15/1	0.1	SMOKE DETECTOR
INSIDE RECEPTACLES (2 @ 180 VA)	0.36	20/1	3		8		4	20/1	0.6	OUTSIDE AND WETWELL LIGHTS
RTU–LCP–024 (PLC)	0.5	20/1	5			8.7	6	20/1	0.54	OUTSIDE RECEPTACLES (3 @ 180 VA)
RTU–LCP–024 (INSTRUMENT POWER)	0.5	20/1	7	8.3			8	20/1	0.5	HEAT TRACE (SEE NOTE 9)
RTU–LCP–024 (PANEL POWER)	0.5	20/1	9		5		10	20/1	0.1	HOTBOX HEATER (SEE NOTE 9)
AE/AIT02490	0.1	15/1	11			1.7	12	20/1	0.1	ATTIC
RTU–LCP–02481	0.5	20/1	13	4.2			14	20/3		SPARE (SEE NOTE 8)
SPARE		20/1	15		0		16	–		"
SPARE		20/1	17			0	18	–		"
SPARE (SEE NOTE 8)		20/3	19	0			20	20/3		SPARE (SEE NOTE 8)
"		–	21		0		22	–		"
"		–	23			0	24	–		"
			TOTALS	15.8	13	10.3	AMPS			

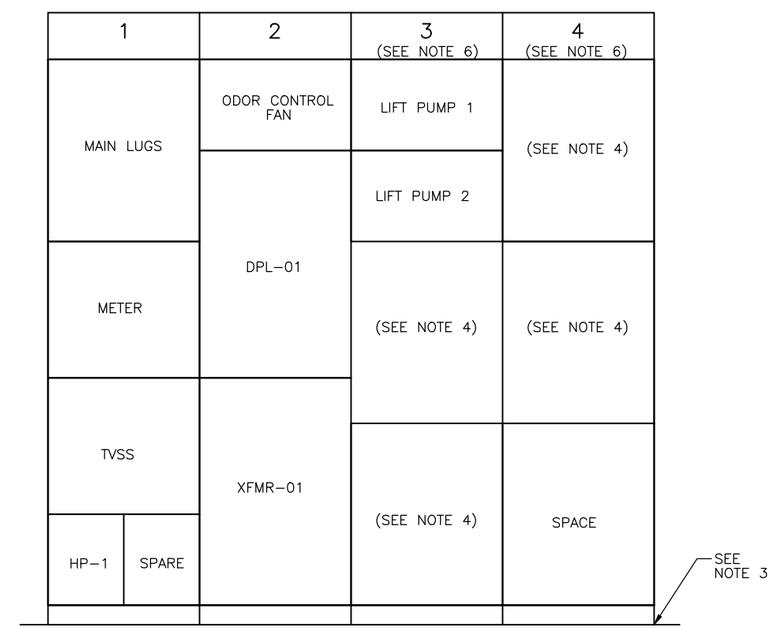

MCC ELEVATION

NTS

NOTES:

1. GENERATOR CIRCUIT BREAKER TO BE SIZED BY MANUFACTURER.
2. BREAKER AND EQUIPMENT SHALL BE SERVICE ENTRANCE RATED, WITH AN SCCR OF AT LEAST 42,000A.
3. NO CONCRETE PAD. PROVIDE ANTI CORROSION MATERIAL BETWEEN MCC AND CONCRETE FLOOR.
4. PROVIDE PREPARED SPACE FOR FUTURE 250A FRAME FEEDER CB.
5. SEE DWG E–02 FOR SERVICE DETAILS.
6. PROVIDE 600A VERTICAL BUS THIS SECTION.
7. PROVIDE GENERATOR RECEPTACLE: CROUSE–HINDS AREA1042 TO MATCH PLUG ARJ–1048 ON EXISTING MOBILE GENERATOR. PLUG AND DISCONNECT MAY BE PROVIDED AS PREASSEMBLED UNIT.
8. POSSIBLE FUTURE LOADS: – 3 MOTORIZED VALVE OPERATORS, 3–PH.
9. PROVIDE GFEP, 30mA, TYPE EQUIPMENT GROUND FAULT PROTECTION CIRCUIT BREAKER.
10. SPU STANDARD PRACTICE REQUIRES MANUAL TRANSFER SWITCH (MTS) WITH MOBILE GENERATOR CONNECTION. ATS PROVIDED AS EXCEPTION DUE TO FUTURE ON–SITE GENERATOR.
11. IN A NEMA 1 ENCLOSURE PROVIDE AN 80% RATED STATIC TRIP CIRCUIT BREAKER PER SPECIFICATIONS.

FIGURE B–3
ELECTRICAL ONE–LINE DIAGRAM

VAULT SERIAL NO.	DATE	MARK	NATURE REVISIONS	MADE	CHK'D	REV'D

P:\EEGD\SPU & COS Standard\SPU Ch9_DS_Guidelines\Plot_Files\B-3 N723301_EL_OneLineDiagram_P.dwg
Xrefs: | N723301_EL_OneLineDiagram |
lec Sep-10-15 8:58am
Layout Tab: 3 N723301_EL_OneLineDiagram_P

0 ½ 1
IF THIS BAR DOES NOT MEASURE 1" THEN DRAWING IS NOT PLOTTED TO ORIGINAL SCALE.

APPROVED FOR ADVERTISING
FRED PODESTA
DEPARTMENT OF EXECUTIVE ADMINISTRATION
SEATTLE, WASHINGTON 20
BY:
DIRECTOR, CONTRACTING SERVICES

NAME OR INITIALS AND DATE
DESIGNED
CHECKED
DRAWN CCH
CHECKED

INITIALS AND DATE
REVIEWED:
DES. CONST.
SDOT PROJ. MGR.
RECEIVED
REVISED AS BUILT

ALL WORK DONE IN ACCORDANCE WITH THE CITY OF SEATTLE STANDARD PLANS AND SPECIFICATIONS AND OTHER DOCUMENTS CALLED FOR IN SECTION 0–02.3 OF THE PROJECT MANUAL.

Seattle Public Utilities
City of Seattle
Chuck Clarke, Director
ORDINANCE NO.
FUND:
SCALE: NONE
APPROVED
INSPECTOR'S BOOK

SEATTLE PUBLIC UTILITIES DESIGN STANDARDS AND GUIDELINES

JOB NO. PC N723301 R/W CO
DRAWING NO.
SHEET B–3 OF 8

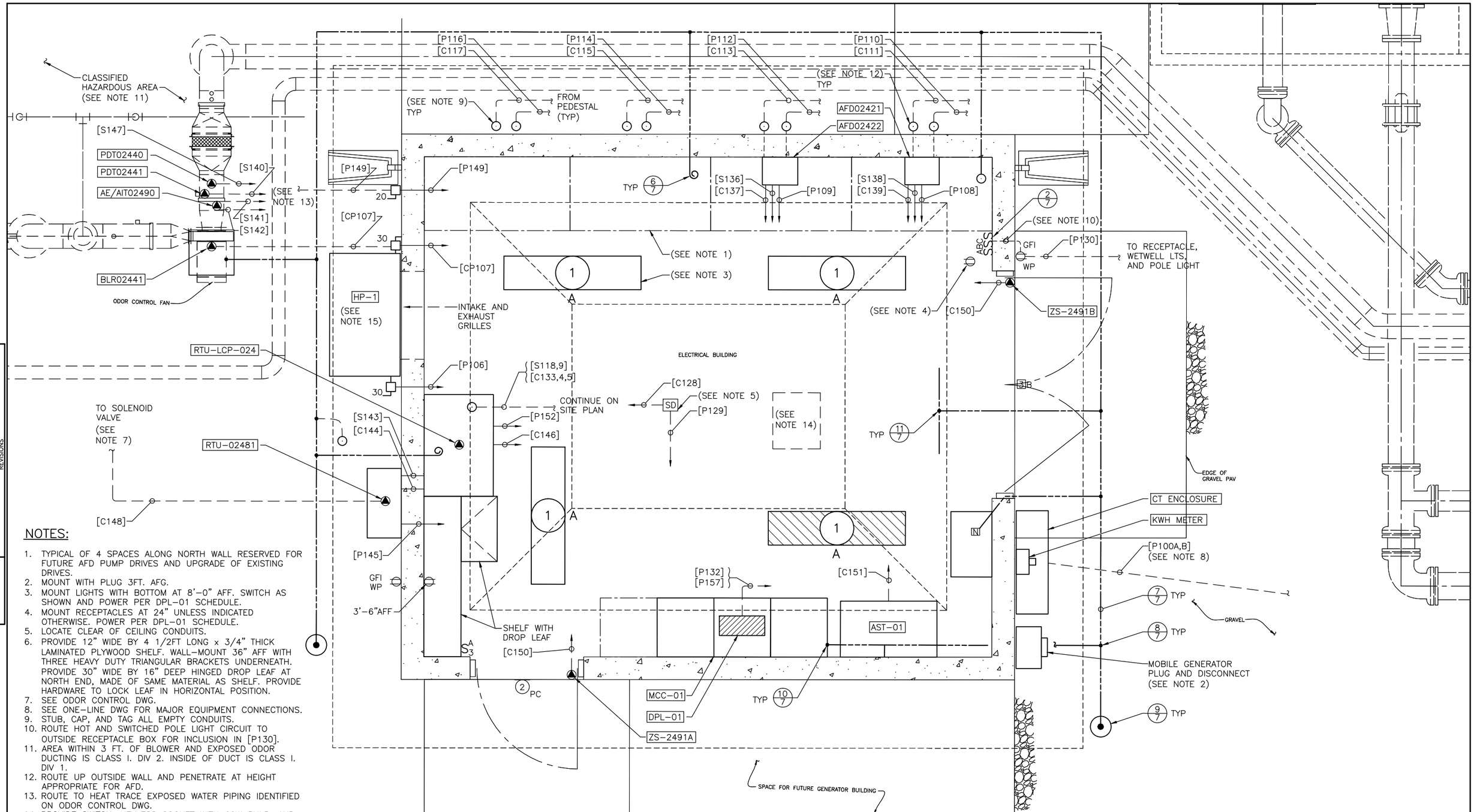

NOTES:

1. TYPICAL OF 4 SPACES ALONG NORTH WALL RESERVED FOR FUTURE AFD PUMP DRIVES AND UPGRADE OF EXISTING DRIVES.
2. MOUNT WITH PLUG 3FT. AFG.
3. MOUNT LIGHTS WITH BOTTOM AT 8'-0" AFF. SWITCH AS SHOWN AND POWER PER DPL-01 SCHEDULE.
4. MOUNT RECEPTACLES AT 24" UNLESS INDICATED OTHERWISE. POWER PER DPL-01 SCHEDULE.
5. LOCATE CLEAR OF CEILING CONDUITS.
6. PROVIDE 12" WIDE BY 4 1/2FT LONG x 3/4" THICK LAMINATED PLYWOOD SHELF. WALL-MOUNT 36" AFF WITH THREE HEAVY DUTY TRIANGULAR BRACKETS UNDERNEATH. PROVIDE 30" WIDE BY 16" DEEP HINGED DROP LEAF AT NORTH END, MADE OF SAME MATERIAL AS SHELF. PROVIDE HARDWARE TO LOCK LEAF IN HORIZONTAL POSITION.
7. SEE ODOR CONTROL DWG.
8. SEE ONE-LINE DWG FOR MAJOR EQUIPMENT CONNECTIONS.
9. STUB, CAP, AND TAG ALL EMPTY CONDUITS.
10. ROUTE HOT AND SWITCHED POLE LIGHT CIRCUIT TO OUTSIDE RECEPTACLE BOX FOR INCLUSION IN [P130].
11. AREA WITHIN 3 FT. OF BLOWER AND EXPOSED ODOR DUCTING IS CLASS I. DIV 2. INSIDE OF DUCT IS CLASS I. DIV 1.
12. ROUTE UP OUTSIDE WALL AND PENETRATE AT HEIGHT APPROPRIATE FOR AFD.
13. ROUTE TO HEAT TRACE EXPOSED WATER PIPING IDENTIFIED ON ODOR CONTROL DWG.
14. PROVIDE SWITCH, KEYLESS SOCKET WITH 60W BULB, AND GFI RECEPTACLE N ATTIC ADJACENT TO ACCESS HATCH.
15. PACKAGED HEAT PUMP UNIT. SEE RCHITECTURAL/STRUCTURAL PLANS.
16. EQUIPMENT SPACE IS LIMITED. VERIFY ACTUAL EQUIPMENT SUPPLIED WILL FIT IN ALLOCATED SPACES.

N

ELECTRICAL AND HVAC PLAN

(SEE NOTE 6)

FIGURE B-4

ELECTRICAL POWER AND LIGHTING PLAN WITH HVAC

VAULT	SERIAL NO.	DATE	MARK	NATURE REVISIONS	MADE	CHK'D	REV'D

0 ½ 1
IF THIS BAR DOES NOT MEASURE 1" THEN DRAWING IS NOT PLOTTED TO ORIGINAL SCALE.

APPROVED FOR ADVERTISING
FRED PODESTA
DEPARTMENT OF EXECUTIVE ADMINISTRATION
SEATTLE, WASHINGTON 20
BY:
DIRECTOR, CONTRACTING SERVICES

NAME OR INITIALS AND DATE
DESIGNED
CHECKED
DRAWN CCH
CHECKED

INITIALS AND DATE
REVIEWED:
DES. CONST.
SDOT PROJ. MGR.
RECEIVED
REVISED AS BUILT

ALL WORK DONE IN ACCORDANCE WITH THE CITY OF SEATTLE STANDARD PLANS AND SPECIFICATIONS AND OTHER DOCUMENTS CALLED FOR IN SECTION 0-02.3 OF THE PROJECT MANUAL.

Seattle Public Utilities
City of Seattle
Chuck Clarke, Director
ORDINANCE NO.
FUND:
SCALE: 3/4" = 1'-0"
APPROVED
INSPECTOR'S BOOK

SEATTLE PUBLIC UTILITIES DESIGN STANDARDS AND GUIDELINES

JOB NO. PC N723301
R/W
CO
DRAWING NO.
SHEET B-4 OF 8

P:\EEGD\SPU & COS Standard\SPU Ch9_DS_Guidelines\Plot_Files\B-4 N723301_EL_PowerLightingPlan_P.dwg
Xrefs: | N723301_BS16 | N723301_EL_PowerLightingPlan |
lec Sep-10-15 8:58am
Layout Tab: 4 N723301_EL_PowerLightingPlan

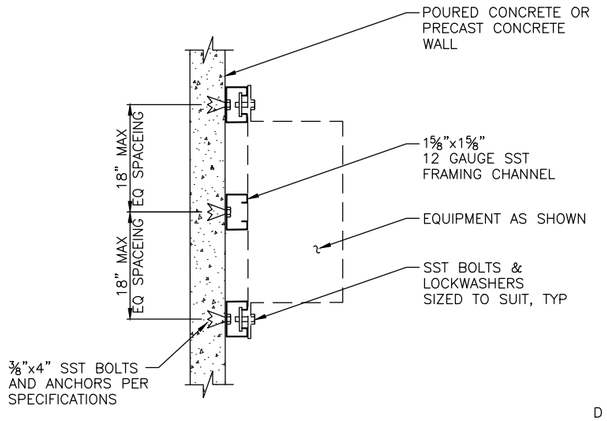

EQUIPMENT MOUNTED ON MASONRY SURFACE — 1 VAR

NTS

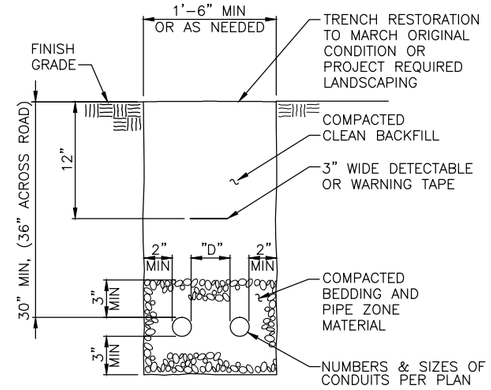

D = 2" MIN FOR POWER OR COMM CONDUITS
D = 6" MIN BETWEEN POWER AND COMM CONDUITS

TRENCH AND CONDUIT PLACEMENT — 2 VAR

NTS

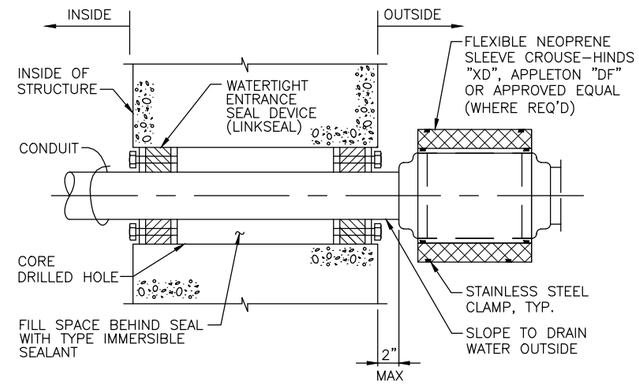

NOTE:
USE DOUBLE LINK-SEAL MODULES WHERE APPLIED WHEN CONDUITS PENETRATE EXISTING UNDERGROUND STRUCTURES.

WATERTIGHT WALL CONDUIT SEAL — 3 VAR

NTS

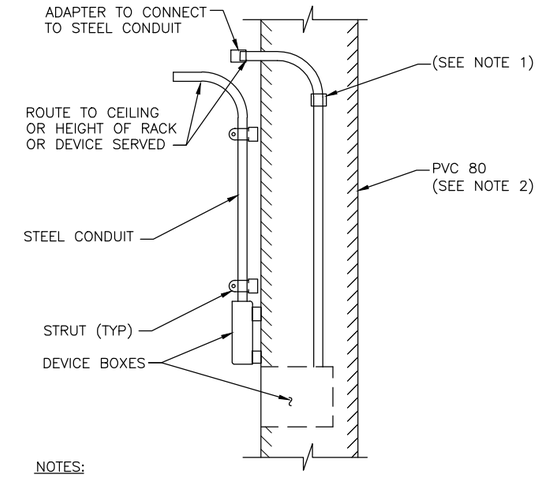

NOTES:

1. MAY BE PVC-80 IF PVC-RGS ELBOW PROVIDED WHERE CONDUIT EXITS WALL.
2. NO MORE THAN 2-1" CONDUITS PER CMU CELL. AVOID REINFORCED CELLS WHEN POSSIBLE. OTHERWISE, COORDINATE WITH STRUCTURAL ENGINEER.

CONDUIT WALL INSTALLATION — 4 VAR

NTS

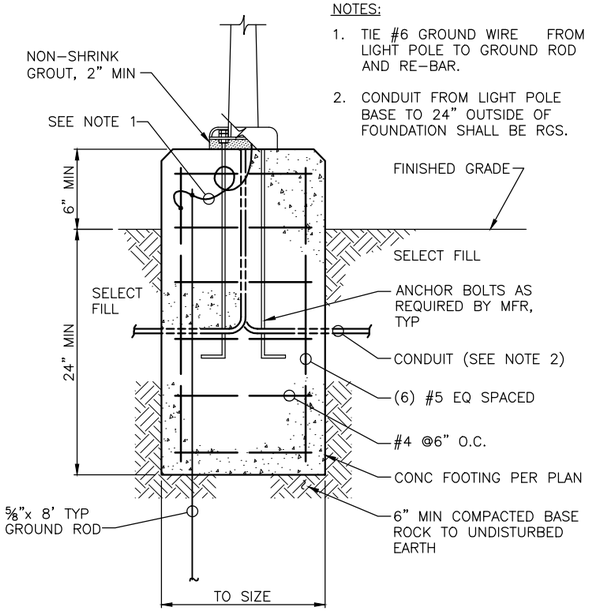

NOTES:

1. TIE #6 GROUND WIRE FROM LIGHT POLE TO GROUND ROD AND RE-BAR.
2. CONDUIT FROM LIGHT POLE BASE TO 24" OUTSIDE OF FOUNDATION SHALL BE RGS.

TYPICAL LIGHT POLE BASE IN PAVING — 5 VAR

NTS

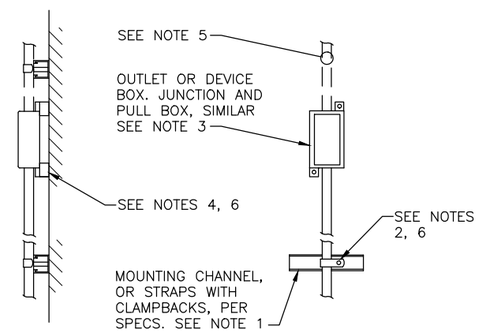

NOTES:

1. SMOOTH ALL ROUGH EDGES OF MOUNTING CHANNEL, USE TOUCH-UP PAINT AS REQUIRED.
2. USE SINGLE-HOLE STRAP CLAMPS WITH MATCHING CLAMP BACKS WHERE LOWER THAN 6-FEET.
3. MOUNTING HEIGHT BASED ON SPEC REQUIREMENTS EXCEPT AS INDICATED ON DWGS.
4. SPACE OFF WALL AT LEAST ¼". USE ¾" DIAMETER NYLON SPACER.
5. WHERE APPLICABLE BOXES WITH TWO OR MORE CONDUITS MAY HAVE SUPPORTS OMITTED PER NEC.
6. USE STAINLESS STEEL HARDWARE.

WALL MOUNTED DEVICE — 6 VAR

NTS

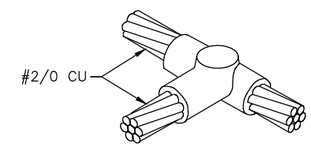

"CADWELD" TYPE TA CABLE TO CABLE TEE CONNECTION

DETAIL — 7 VAR

NTS

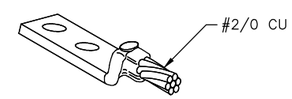

"CADWELD" TYPE GL CABLE TO BURNDY TYPE QQA TWO-HOLE CONNECTION

DETAIL — 8 VAR

NTS

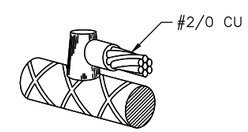

"CADWELD" TYPE RR END CABLE TO UPPER REBAR CONNECTION

DETAIL — 9 VAR

NTS

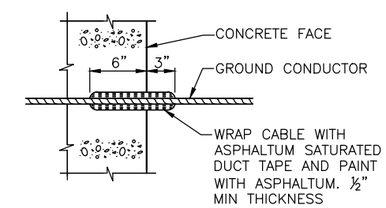

GROUND CONDUCTOR PENETRATION THROUGH CONCRETE WHERE LOW GROUND WATER TABLE

DETAIL — 10 VAR

NTS

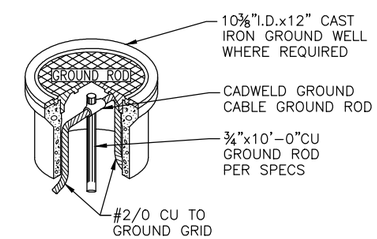

DETAIL — 11 VAR

NTS

FIGURE B-5
ELECTRICAL STANDARD DETAILS

NATURE REVISIONS	MADE	CHK'D	REV'D

VAULT SERIAL NO.	DATE	MARK

P:\EEGD\SPU & COS Standard\SPU Ch9_DS_Guidelines\Plot_Files\B-5 N723301_EL_StandardDetails_P.dwg
Xrefs: | N723301_EL_StandardDetails |
lec Sep-10-15 8:58am
Layout Tab: 5 N723301_EL_StandardDetails_P

0 ½ 1
IF THIS BAR DOES NOT MEASURE 1" THEN DRAWING IS NOT PLOTTED TO ORIGINAL SCALE.

APPROVED FOR ADVERTISING
FRED PODESTA
DEPARTMENT OF EXECUTIVE ADMINISTRATION
SEATTLE, WASHINGTON 20
BY:
DIRECTOR, CONTRACTING SERVICES

NAME OR INITIALS AND DATE	INITIALS AND DATE
DESIGNED	REVIEWED: DES. CONST. SDOT PROJ. MGR.
CHECKED	
DRAWN CCH	RECEIVED
CHECKED	REVISED AS BUILT

ALL WORK DONE IN ACCORDANCE WITH THE CITY OF SEATTLE STANDARD PLANS AND SPECIFICATIONS AND OTHER DOCUMENTS CALLED FOR IN SECTION 0-02.3 OF THE PROJECT MANUAL.

Seattle Public Utilities
City of Seattle
Chuck Clarke, Director
ORDINANCE NO.
FUND:
SCALE: AS SHOWN
APPROVED
INSPECTOR'S BOOK

SEATTLE PUBLIC UTILITIES DESIGN STANDARDS AND GUIDELINES

JOB NO. PC N723301 R/W CO
DRAWING NO.
SHEET B-5 OF 8

LIGHTING SCHEDULES

SYM	TYPE	DESCRIPTION	LAMPS	VOLTS	MOUNTING	MANUFACTURER	POLE
1	FLUOR	HEAVY DUTY INDUSTRIAL FIXTURE, DIE EMBOSSED REFLECTOR CONSTRUCTED OF HEAVY GAUGE COLD-ROLLED STEEL. EXTRUDED APERATURES FOR 10% UPLIGHT. HEAVY GAUGE STEEL HOUSING WITH LONGITUDINAL RIBS.	F32T8	120	STEM	LITHONIA AF10-2-32-120	N/A
1 (EMERGENCY)	FLUOR	SAME AS TYPE 1, EXCEPT WITH AN EMERGENCY BALLAST.	F32T8	120	STEM		N/A
2 PC	HPS	SMALL WALL MOUNT LUMINAIRE. WET LOCATION RATED WITH ONE-PIECE POLYCARBONATE FRONT AND ALUMINUM BASE, AND PHOTOCELL.	35W HPS	120	WALL	GE WS03S120PE	N/A
3	HPS	SHOEBOX LUMINAIRE, UL WET LOCATION LABEL, HEAVY-GAUGE, ALUMINUM HOUSING, WEALDED SEAMS, HEAT/IMPACT RESISTANT. IMPACT-RESISTANT TEMPERED GLASS LENS. TYPE II DISTRIBUTION.	150W HPS	120	WALL	GE W25C15S1A1GMEDDB	N/A
4	HPS	SHOEBOX LUMINAIRE, UL WET LOCATION LABEL, HEAVY-GAUGE, ALUMINUM HOUSING, WEALDED SEAMS, HEAT/IMPACT RESISTANT. IMPACT-RESISTANT TEMPERED GLASS LENS. TYPE II DISTRIBUTION.	250W HPS	120	POLE	LITHONIA KSF1150SR2120SP04	20' ALUMINUM ALLOY, SQUARE, WITH HANDHOLE. LITHONIA SSA154C OR APPROVED EQUAL
5	MH	COPPER FREE ALUMINUM BALLAST HOUSING, GLASS GLOBE, FIBERGLAS REINFORCED REFLECTOR, STAINLESS STEEL EXTERIOR HARDWARE, PORCELAIN LAMP SOCKET. SUITABLE FOR USE IN CLASS I, DIVISION 1.	100W	120	WALL	CROUSE-HINDS/COOPER EVMBX92101	N/A

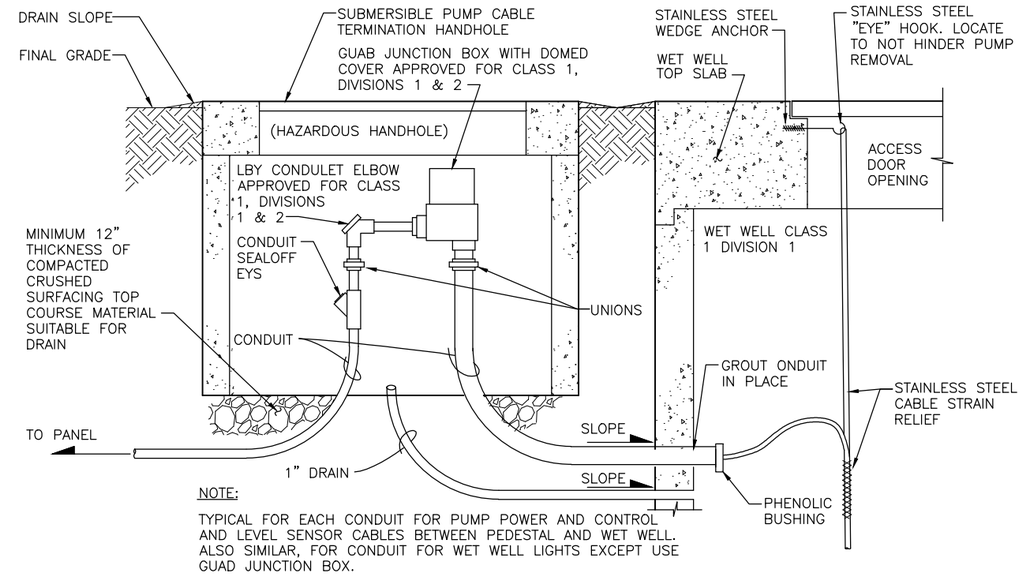

NOTE:

TYPICAL FOR EACH CONDUIT FOR PUMP POWER AND CONTROL AND LEVEL SENSOR CABLES BETWEEN PEDESTAL AND WET WELL. ALSO SIMILAR, FOR CONDUIT FOR WET WELL LIGHTS EXCEPT USE GUAD JUNCTION BOX.

TYP. MOTOR POWER AND SENSOR CABLE TERMINATION HANDHOLE DETAIL (4 VAR)

NTS

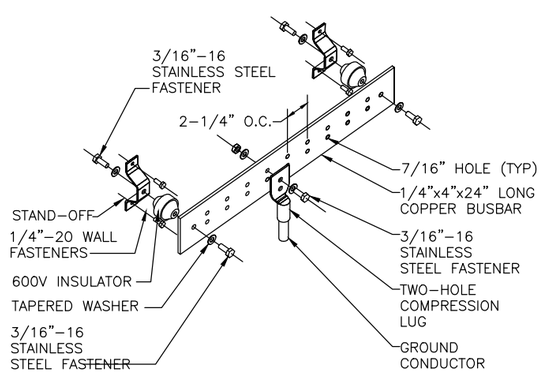

TYP. GROUNDING BUSBAR DETAILS (1 VAR)

NTS

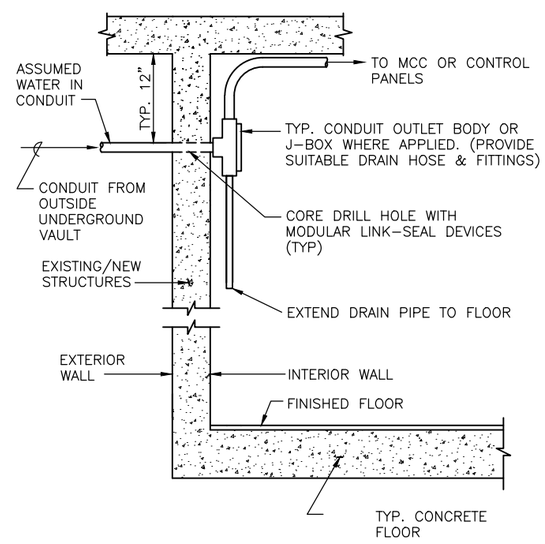

TYP. UNDERGROUND VAULT CONDUIT PENETRATION DETAIL (2 VAR)

NTS

1. PROVIDE CONDUCTOR TAGS AT EACH CONDUCTOR TERMINATION.
2. PROVIDE CONDUCTOR TAGS WITH THE NOMENCLATURE AS SHOWN ON THE WIRING DIAGRAMS.

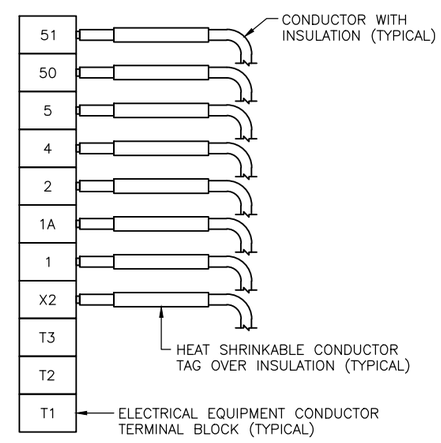

TYP. WIRE TAGGING DETAIL (3 VAR)

NTS

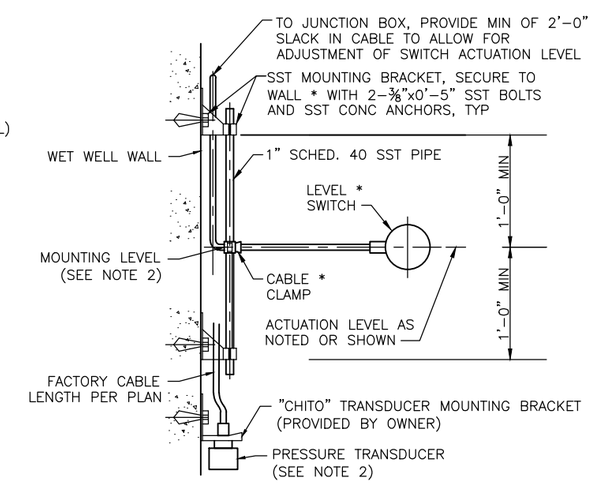

TYP. FLOAT LEVEL SWITCH & TRANSDUCER MOUNTING DETAIL (5 VAR)

NTS

FIGURE B-6
LIGHTING SCHEDULE AND ELECTRICAL DETAILS

VAULT SERIAL NO.	DATE	MARK	NATURE REVISIONS	MADE	CHK'D	REV'D

P:\EEGD\SPU & COS Standard\SPU Ch9_DS_Guidelines\Plot_Files\B-6 N723301_EL_ScheduleDetails.dwg
Xrefs: | N723301_EL_ScheduleDetails |
lec Sep-10-15 8:57am
Layout Tab: 6 N723301_EL_ScheduleDetails

0 ½ 1
IF THIS BAR DOES NOT MEASURE 1" THEN DRAWING IS NOT PLOTTED TO ORIGINAL SCALE.

APPROVED FOR ADVERTISING
FRED PODESTA
DEPARTMENT OF EXECUTIVE ADMINISTRATION
SEATTLE, WASHINGTON 20
BY:
DIRECTOR, CONTRACTING SERVICES

NAME OR INITIALS AND DATE	INITIALS AND DATE
DESIGNED	REVIEWED: DES. CONST. SDOT PROJ. MGR.
CHECKED	
DRAWN CCH	RECEIVED
CHECKED	REVISED AS BUILT

ALL WORK DONE IN ACCORDANCE WITH THE CITY OF SEATTLE STANDARD PLANS AND SPECIFICATIONS AND OTHER DOCUMENTS CALLED FOR IN SECTION 0-02.3 OF THE PROJECT MANUAL.

Seattle Public Utilities
City of Seattle
Chuck Clarke, Director
ORDINANCE NO.
FUND:
SCALE: AS SHOWN
APPROVED
INSPECTOR'S BOOK

SEATTLE PUBLIC UTILITIES DESIGN STANDARDS AND GUIDELINES

JOB NO. PC N723301 R/W CO
DRAWING NO.
SHEET B-6 OF 8