Lori M

City Of Seattle

STANDARD

PLANS

for

Municipal Public Works

Construction

1986

Eleventh Edition

1986

STANDARD PLAN NUMBERS

000	General/Legal/Miscellaneous Plans		
	Datum	Elevations and Datums	001
	Abbreviations	Abbreviations	002a
		Abbreviations	002b
		Abbreviations	002c
	Standard Symbols	Standard Symbols	003a
		Standard Symbols	003b
		Standard Symbols	003c
		Standard Symbols	003d
		Standard Symbols	003e
		Standard Symbols	003f
		Standard Symbols	003g
		Standard Symbols	003h
		Standard Symbols	003i
		Standard Symbols	003j
		Standard Symbols	003k
	Payment Plan	Sewer, Drainage Payment Diagram	010
	Monument	Monument Frame & Cover	020
	Misc. Plans	Standard Location Underground Utility (Residential Street)	030
		Mailbox Mounting (Residential)	031
100	Landscape Planting		
	Trees	Deciduous Tree Planting	100
		Coniferous Tree Planting	101
	Shrub & Ground Cover	Shrub Planting	110
		Ground Cover Planting	111
		Planting Pattern	112
	Irrigation	Irrigation Meter Assembly	120
		Hose Bid Assembly	121
		Drain Valve	122
	Tree Grate	48" Sq 2 Piece Tree Grate	130
	Grading	Slope Rounding	140
		Rock Facing	141

200 Sewer/Drainage Appurtenance

Manholes	Type 200 Manhole	200a
	Type 200 Manhole Top & Bottom Slabs	200b
	Type 201 Manhole	201a
	Type 201 Manhole Top & Bottom Slabs	201b
	Type 202 Manhole	202a
	Type 202 Manhole Top & Bottom Slabs	202b
	Type 203 Manhole	203a
	Type 203 Manhole Top & Bottom Slabs	203b
	Type 204 Manhole	204a
	Type 204 Manhole Top & Bottom Slabs	204b
	Type 205 Manhole	205a
	Type 205 Manhole Top & Bottom Slabs	205b
	Type 206 Manhole	206a
	Type 206 Manhole Top & Bottom Slabs	206b
	Type 207 Manhole	207
Materials	24" Dia Ring & Cover	230
	Manhole Ring Extension	231
	Manhole Ladder & Step	232
	Drop Connection	233
Catch Basins	Type 240 Catch Basin	240
	Type 241 Catch Basin	241a
	Type 241 C.B. Installation	241b
	Type 242 Catch Basin	242
	Precast C.B. Top Slab	243a
	Precast C.B. Top & Bottom Slab & Extension Units	243b
Inlets	Type 250 Inlet	250
	Type 252 Inlet	252
	Inlet/CB Location & Installation	260a
	C.B. & Inlet Installation	260b
	Typical C.B. Connection	261
	Inlet Frame Type 262	262
	Type 263 Frame	263
	Inlet Frame & Grate	264
	Vaned Grate	265
	Vaned Grate	266
	Outlet Trap	267a
	Outlet Trap (Parks Dept. use only)	267b
	Extension for Inlet	268
Flow Control	Flow Control Structure	270a
	PVC Shear Gate	270b

	Detention Structure End Plate Details	271a
	Detention Structure End Plate Details	271b
	Detention End Plate Dimension Details	271c
Pipe Installation	Tee Installation Corrugated Metal Pipe	279
	8" Clean-Out	280
	Sidewalk Drain	281
	Corrugated Metal Pipe Coupling Band	282a
	Corrugated Metal Pipe Coupling Band	282b
	Side Sewer Installation	283
	Typical Trench Section	284
Clearance Plans	Pipe Bedding	285
	Sewer & Water Spacing & Clearance	286a
	Sewer/Water Clearance	286b

300 Watermain Appurtenance

Pipe Connections	Connections to Existing Watermain	300a
	Connections to Existing Watermain	300b
	Connection to Existing Watermain	300c
Hydrants	Hydrant Setting Detail	310a
	Hydrant Setting Detail	310b
	Hydrant Setting Detail	311a
	Hydrant Setting Detail	311b
	Fire Hydrant Protection	312
	Wall & Requirements for Hydrants	313
	Fire Hydrant Locations & Clearances	314
Valve	Cast Iron Valve Box & Operating Nut Extensions	315a
	Cast Iron Valve Box & Operating Nut Extensions	315b
Concrete Blocking	Watermain Thrust Blocking Vertical Fittings	330a
	Watermain Thrust Blocking Vertical Fittings	330b

	Watermain Thrust Blocking Horizontal Fittings	331a
	Watermain Thrust Blocking Horizontal Fittings	331b
Blow Off	2" Blow Off Detail	340a
	2" Blow Off Detail	340b
Pipe Bedding	Watermain Pipe Bedding (Special)	350
Misc. Plans	Watermain Electrolysis Test Station	360
	Type 361 Valve Chamber Ring and Cover	361
	Joint Bonding for D.I.P. Watermains	362
	Isolating Coupling	363

400 Street Paving & Appurtenance

Paving	Half Section, Grading	400
	Residential Pavement Sections	401
	Arterial Pavement Sections	402
	Cement Concrete Alley Pavements	403
	Pavement Patching	404a
	Pavement Patching	404b
	Types of Joints for Concrete Pavement	405
Curbs	Type 410 Curb	410
	Curb Joints & Dowels	411
	Extruded Curb	412
	Traffic Curb Precast Cement Concrete	413
	Traffic Curb Block Precast Cement Concrete	414
	Traffic Circle Details	415
Sidewalks	Concrete Sidewalk Details	420
	Sidewalk with Monolithic Curb	421
	Curb Ramp Construction Details	422a
	Curb Ramp Location Details	422b
	Bus Shelter Footing	423
Driveways	Type 430 Driveways	430
	Concrete Driveway Placed with Sidewalk Construction	431

Stairway, Steps	Concrete Stairway & Handrail	440
	Cement Concrete Steps	441
	Steel Pipe Handrail	442
	Steel Pipe Railing for Bike Path	443
Fence	Chain Link Fence	450a
	Chain Link Fence	450b
	Chain Link Fence Gates	450c
Misc. Plans	Ecology Block Concrete	460

500 Signalization/Lighting

Signal Controller	Signal Controller Cabinet	500
	Signal Controller Service Connection	501
Vehicular Signal	Vehicular Signal Mounting Bracket Assemblies	510
	Pedestrian Signal	511
Pedestrian Signal	Pedestrian Signal Clamshell Mounting	520
	Pedestrian Pushbutton	521
	Pedestrian Pushbutton Assembly Installation	522
	Pedestrian Signal & Pushbutton on Mounted Wood Pole	523
	Octagonal Pedestal	524
Loop Detectors	Loop Detectors	530a
	Detector Loop Wire Splice	530b
Foundations	Signal & Pedestal Foundation	540
	Foundations	541
	Chief Seattle Ornamental Street Light Foundation	542
	Street Light Foundations & Wiring	543
Handholes	Handholes	550
Poles	Wood Strain Poles	560
	Steel Mast Arm Pole with Street Light	561
	Steel Mast Arm Pole	562

		Strain Poles	563
		Utility Pole Details	565
	Bracket Arms	Luminaire Bracket Arms (Wood Pole Mounting)	570
		Luminaire Bracket Arms (Wood Pole Mount)	571
		Luminaire Bracket Arms (Steel Pole Mount)	572
		Secondary Wiring	573
	Conduit Risers	Conduit Riser	580
		Conduit Riser	581
	Misc. Electrical/ Signalization	Insulator Brackets	590
		Luminaire Alignment	591
		Combination Expansion/Deflection Fitting	592
600	Signs		
	Overhead	Overhead Interior Illuminated Signs	600a
		Overhead Interior Illuminated Signs	600b
		Span Wire Installation	601a
		Overhead Wood Signs Spanwire Mounted	601b
		Sign (Non Spanwire Mounting)	601c
	Pole Mounted	Standard Sign Installation Steel Poles	610
		SDS & SNS Installations on Steel Strain Poles	611
		SDS Bracket for Steel Mast Arm Poles	612
		SDS Bracket for Steel Strain Poles	613
		SDS Bracket for Wood Utility Poles	614
		SNS Bracket for Steel Poles	615
		Traffic Sign Mounting on Metal Poles	616
	Post Mounted	Traffic Sign & Wood Post Installation	620
		Traffic Sign & Wood Post Installation	621

		Street Sign Installation	622
		Street Name Sign Pedestal Installation	623
		Post Cap	624
		Wood Traffic Sign Posts	625
		Object Marker Installation	626
700	Pavement Markings		
	Traffic Buttons/ Lane Marker	Traffic Buttons and Lane Markers	700
	Channelization	Channelization Standard	710
		Typical Left Turn Channelization and Legend Placement	711
		Typical Crosswalk and Stop Line Installation Details	712
	Legends/Symbols	Pavement Markings Legends/Symbols	720a
		Pavement Markings Legends/Symbols Markings	720b
		Pavement Markings Legends/Symbols	721
		Bicyclist & Pedestrian Symbols	722
800	Structures		
	Walls	Support Wall	800
		Curb Wall	801

Standard Plan No. 001

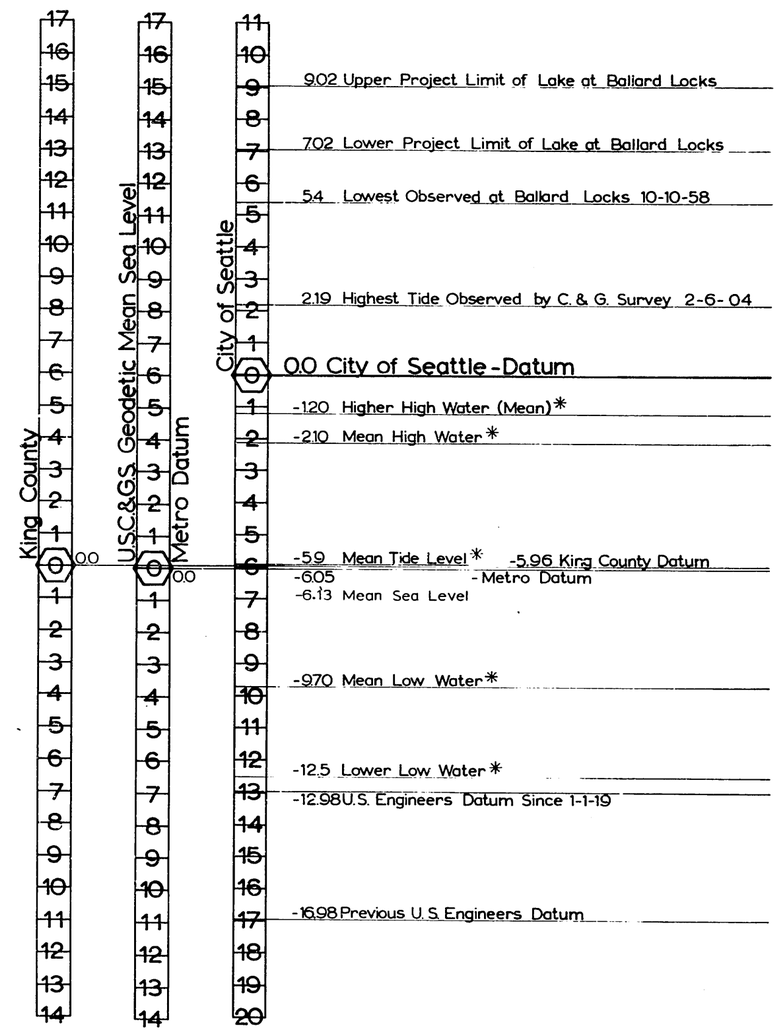

* These elevations vary according to tidal observation.
For the latest figures call the U.S.C.G.S. Office

Do Not Scale

APPROVED BY THE BOARD OF PUBLIC WORKS 10/8, 19[illegible] CHAIRMAN ATTEST: EXEC SECRETARY	**CITY OF SEATTLE** **DEPARTMENT OF ENGINEERING**	Elevations and Datums 11-13-62

Abbreviations

Aban	Abandon(ed)
Adj	Adjust
AIC	Aerial Interconnect
AV	Air Valve
Al	Aluminum
AP	Angle Point
Approx	Approximate
Asph	Asphalt
ABW	Asphalt Bike Way
ATB	Asphalt Treated Base
ACV	Automatic Control Valve
AVB	Automatic Vacuum Breaker
Ave	Avenue
Avg	Average
B&B	Ball & Burlap
BV	Ball Valve
BR	Bare Root
BOC	Beginning of Curb
BO	Blow Off
BF	Bottom Face
Br	Brick
Blkhd	Bulkhead
BfV	Butterfly Valve
Cb	Cable
Cal	Caliper
CIP	Cast Iron Pipe
CB	Catch Basin
℄	Center Line
C-C	Center to Center
CLF	Chain Link Fence
Ch	Chamber
Cl	Class
CO	Clean Out
Clr	Clearance
Conc	Concrete Walk
CBW	Concrete Bike Way
CC	Concrete Culvert
CW	Concrete Walk
Cond	Condition
Cd	Conduit
Conn	Connect
CMP	Corrugated Metal Pipe
Constr	Construction
Cont	Continuous
Cr	Cross
Cu Ft	Cubic Feet
Cu Yd	Cubic Yard
Culv	Culvert
C&G	Curb and Gutter
CR	Curb Radius
Dept	Department
Dia	Diameter
DB	Direct Burial Cable
DGV	District Gate Valve
DCV	Double Check Valve
Dwy	Driveway
DIP	Ductile Iron Pipe
Ea	Each
Esmt	Easement
Ecc	Eccentric
Elec	Electric/Electrical
ECb	Electrical Cable
ECd	Electrical Conduit
ED	Electrical Duct
EMH	Electrical Manhole
EV	Electrical Vault
El/ Elev	Elevation
Encl	Enclosure
EOC	End of Curb
Eq	Equal
Ex	Existing
Exp	Expansion
Ft	Feet
Fig	Figure
FF	Finished Floor
FACb	Fire Alarm Cable
FAHH	Fire Alarm Handhole
Flr	Floor
FCS	Flow Control Structure
FM	Force Main

APPROVED BY THE BOARD OF PUBLIC WORKS
10/24, 19 [illegible] CHAIRMAN
ATTEST: [illegible] SECRETARY

CITY OF SEATTLE
DEPARTMENT OF ENGINEERING

Abbreviations

Gal	Gallon
GPM	Gallons Per Minute
Galv	Galvanize/Galvanized
GIP	Galvanized Iron Pipe
GSP	Galvanized Steel Pipe
GM	Gas Meter
G Reg	Gas Regulator
Gas V	Gas Valve
GV	Gate Valve
Ga	Gauge
Gr	Grade
Gnd	Ground
GrHH	Ground Rod Handhole
GP	Guy Pole
HH	Handhole
Hex	Hexagon/Hexagonal
HPG	High Pressure Gas
HPS	High Pressure Sodium
Horiz	Horizontal
HB	Horizontal Bend
Hse	House
HGL	Hydraulic Grade Line
Hyd	Hydrant
In	Inch/Inches
Inl	Inlet
ID	Inside Diameter
Irrg	Irrigation
IE	Invert Elevation
Inv	Invert (Line)
IP	Iron Pipe
IRC	Irrigation Controller
Jt	Joint
JB	Junction Box
KV	Kilovolt
LIT	Large Inlet Top
Lt	Left
LP	Light Pole
LF	Lineal Foot
Loc	Location/Locate
Longit	Longitudinal
MH	Manhole
MCV	Manual Control Valve
MDV	Manual Drain Valve
MA	Mast Arm
Max	Maximum
MJ	Mechanical Joint
MVL	Mercury Vapor Luminaire
Min	Minimum
Misc	Miscellaneous
Mod	Modify/Modified
ML	Monument Line
Nom	Nominal
NIC	Not In Contract
NTS	Not To Scale
No.	Number
OC	On Center
OD	Outside Diameter
Pav	Pavement
PPB	Pedestrian Push Button
PDP	Perforated Drain Pipe
PS	Pipe Sewer Combined
PSS	Pipe Sewer Sanitary
PSD	Pipe Storm Drain
PSDD	Pipe Storm Drain Detention
PE	Plain End
PL	Plate
PCC	Point of Compound Curvature
PC	Point of Curvature
PI	Point of Intersection
PRC	Point of Reverse Curve
PT	Point of Tangency
PVC	Polyvinyl Chloride
LBS	Pounds
PSI	Pounds per Square Inch
PP	Power Pole
PRV	Pressure Reducing Valve
PVB	Pressure Vacuum Breaker
PL	Property Line
Prop	Proposed
Qty	Quantity

APPROVED BY THE BOARD OF PUBLIC WORKS
10/21, 19 [illegible] CHAIRMAN
ATTEST: [illegible] SECRETARY

CITY OF SEATTLE
DEPARTMENT OF ENGINEERING

Abbreviations

Standard Plan No. 002c

R	Radius
RR	Railroad
Rlwy	Railway
Reconn	Reconnect
Red	Reducer
Ref	Refer/Reference
Reinf	Reinforcing/Reinforcement
RCP	Reinforced Concrete Pipe
Reloc	Relocate
Rem	Remove
R&R	Remove and Replace
Repl	Replace
Req'd	Required
Ret	Retire(d)
Rt	Right
R/W	Right of Way
RGS	Rigid Galvanized Steel
RS	Rigid Steel
Rdwy	Roadway
RD	Roof Drain
RIT	Round Inlet Top (not used)
SB	Sand Box
SCL	Seattle City Light
SED	Seattle Engineering Department
SWD	Seattle Water Department
Sec	Section
SD	Service Drain
Sht	Sheet
SS	Side Sewer - Combined
SSS	Side Sewer - Sanitary
Sl	Sleeve
Spcs	Spaces
Spec	Specification(s)
Sq	Square
Std	Standard
Stm Log	Steam Log
Stl	Steel
Stl P	Steel Pipe
St	Street
SDS	Street Designation Sign
SLHH	Street Light Handhole
SNS	Street Name Sign
Struct	Structural/Structure
℄	Survey Line
T	Tee
Tel	Telephone
TCb	Telephone Cable
TCd	Telephone Conduit
TD	Telephone Duct
THH	Telephone Handhole
TMH	Telephone Manhole
TVCb	Television Cable
TVHH	Television Handhole
Temp	Temporary
TH	Test Hole
TF	Top Face
Tr	Traffic
TrCb	Traffic Cable
TrCd	Traffic Signal Conduit
TCHH	Traffic Control Handhole
TrSB	Traffic Signal Box
TrSP	Traffic Signal Pole
XP	Transmission Pole
Typ	Typical
UIC	Underground Interconnect
VCh	Valve Chamber
V/Var	Variable
Vert	Vertical
VB	Vertical Bend
V/C	Vertical Curve
W	Water
WMR	Watermain Radius
WM	Water Meter
WWF	Welded Wire Fabric
WU	Western Union
w/	With
WP	Wood Pole
WSP	Wood Stave Pipe

APPROVED BY THE BOARD OF PUBLIC WORKS
10/31/78 CHAIRMAN
ATTEST: SECRETARY

CITY OF SEATTLE
DEPARTMENT OF ENGINEERING

Abbreviations

Standard Plan No. 003a

ITEM	EXISTING	PEN SIZE	CONSTRUCT	PEN SIZE	REMARKS
PAVING					
Cement Concrete Pavement	6" Conc	00	6" Conc Pav	2½	7008 ①
Asphalt Concrete Pavement	2" Asph/6" Conc	00	Pav	2½	7044 ①
Asphalt Concrete Surfacing	2" Asph	00	2" Asph	2½	7044 ①
Curb		00	Type 108C Curb	2½	
Cement Concrete Walk	CW	00	CW	2½	7111 ①
Curb Ramp		00		2½	12-13-96 Per Tim 7111 ①

① Formatt Stock Number

APPROVED BY THE BOARD OF PUBLIC WORKS
10/31/78 CHAIRMAN
ATTEST: SECRETARY

CITY OF SEATTLE
DEPARTMENT OF ENGINEERING

Standard Symbols

APPROVED BY THE BOARD OF PUBLIC WORKS
10/31/19 19
CHAIRMAN
ATTEST SECRETARY

CITY OF SEATTLE
DEPARTMENT OF ENGINEERING

Standard Symbols

ITEM	EXISTING	PEN SIZE	CONSTRUCT	PEN SIZE	REMARKS
PAVING					
Cement Concrete Bike Way	3" CBW	00	3" CBW	2½	7111 (1)
Asphalt Concrete Bike Way	3" ABW	00	3" ABW	2½	7044 (1)
Grading	Graded	00	To Be Graded	2½	
SEWERAGE & DRAINAGE					
Manhole		0	MH-7	2	See pipe usage for shading.
Inlet - Type 268		0			
Inlet - Type 250A		0		1	
Inlet - Type 250B		0		1	
Inlet - Type 252		0		1	
* Catch Basin, Round Inlet Top		0			
* Catch Basin, Type 151 (Pre 1986)		0			
* Catch Basin, Type 240		0		1	
* Catch Basin, Type 241		0		1	
* Catch Basin, Type 242A		0		1	
* Catch Basin, Type 242B		0		1	
* Sand Box - cheap catch basin wood slats on top	SB	0			

* Draw to Actual Size

(1) Formatt Stock Number

Standard Plan No. 003b

APPROVED BY THE BOARD OF PUBLIC WORKS
10/31/19 19
CHAIRMAN
ATTEST SECRETARY

CITY OF SEATTLE
DEPARTMENT OF ENGINEERING

Standard Symbols

ITEM	EXISTING	PEN SIZE	CONSTRUCT	PEN SIZE	REMARKS
SEWERAGE & DRAINAGE					
Concrete Culvert	12" CC	0	12" CC	2	
Pipe Sewer Combined < 12" Dia	8" PS	0	8" PS	3	
Pipe Sewer Combined ≥ 12" Dia	24" PS	0	24" PS	2	7044 (1)
Side Sewer Combined	6" SS	0	6" SS	3	
Pipe Sewer Sanitary < 12" Dia	8" PSS	0	8" PSS	3	
Pipe Sewer Sanitary ≥ 12" Dia	24" PSS	0	24" PSS	2	7060 (1)
Side Sewer Sanitary	6" SSS	0	6" SSS	3	
Pipe Storm Drain < 12" Dia	8" PSD	0	8" PSD	3	
Pipe Storm Drain ≥ 12" Dia	24" PSD	0	24" PSD	2	7063 (1)
Service Drain	8" SD	0	8" SD	3	
Inlet & CB Connection		0	8"	3	
Small Ditch or Stream	Ditch	00	Ditch	1	
Large Ditch or Stream	Ditch	00	4' Ditch	1	

(1) Formatt Stock Number

Standard Plan No. 003c

LM

APPROVED BY THE BOARD OF PUBLIC WORKS
12/31/ 19 CHAIRMAN
ATTEST: SECRETARY

CITY OF SEATTLE
DEPARTMENT OF ENGINEERING

Standard Symbols

ITEM	EXISTING	PEN SIZE	CONSTRUCT	PEN SIZE	REMARKS
WATER					
Watermain <8" Dia	6" W	0	6" W	3	
Watermain <12" Dia	8" W	0	8" W	4	
Watermain ≥12" Dia	24" W	0	24" W	1	7044 (1)
Bend w/Conc Blocking		0	8"-11¼° HB or VB	1	▲ = Conc Blocking
Cross		0	8"x8"x6"x6" Cr	1	
Tee		0	8"x8"x6" T	1	
Plug w/Conc Blocking		0	or	1	▲ = Conc Blocking
Hydrant		0		1	
Gate Valve w/Valve Box		0	4" GV w/V Box	1	
Gate Valve w/Chamber		0	8" GV w/Ch	2	
Gate Valve w/ Chamber (if the water main is 16" or larger)		0	16" GV w/Ch	1&2	
Reducer	8" W 4" W	0	8"x4" Red		
Air Valve		0		2	
Blowoff		0	1½" BO	2	
* Water Meter	WM	0	WM	2	
Butterfly Valve w/ Valve Box		0	8" Bf V w/V Box	1	
Butterfly Valve w/ Chamber			8" Bf V w/Ch	1	

* Draw to Actual Size (1) Formatt Stock Number

Standard Plan No. 003d

APPROVED BY THE BOARD OF PUBLIC WORKS
12/31/ 19 CHAIRMAN
ATTEST: SECRETARY

CITY OF SEATTLE
DEPARTMENT OF ENGINEERING

Standard Symbols

ITEM	EXISTING	PEN SIZE	CONSTRUCT	PEN SIZE	REMARKS
ELECTRICAL					
Signal Controller Cabinet		00		1	
Transmission Pole	XP	00		1	
Strain Pole MTRL, BOLT SIZE & FOUNDATION	(Curb)	00	(Curb)		
Utility Wood Pole	PP	00		1	
City Wood Pole	PP	00			
Signal Pedestal		00			
Pedestrian Push Button Pedestal		00			
Pedestrian Push Button	5/64	00	PPB	1	
Utility Wood Pole w/(MVL)	PP	00			
(HPS)	PP	00		1	
City Wood Pole w/(MVL)	PP	00			
(HPS)	PP	00		1	
Utility Wood Pole w/Anchor	PP	00		1	
Utility Guy Pole	GP	00	GP	1	
Utility Guy Pole w/Anchor	GP	00	GP	1	
Light Pole (Wood)	LP	00			
Light Pole (Metal) w/(MVL)	LP	00			
(HPS)	LP	00		1	
		00			

Draw luminar arm to scale if you can. Normal 6' 10' long. (carry up)

Standard Plan No. 003e

ITEM	EXISTING	PEN SIZE	CONSTRUCT	PEN SIZE	REMARKS
ELECTRICAL					
Combined Lighting Strain Pole (MVL)		00		1	
(HPS)		00		1	
Traffic Signal Mast Arm Pole		00	MA	3/10scale 2/20scale	
Traffic Signal Mast Arm Pole w/ Luminaire		00	MA	3/10scale 2/20scale	
Vehicle Signal		00		1	
Vehicle Signal w/ Backplate		00		1	
Vehicle Signal (Optically Programmed)		00		1	
Pedestrian Signal		00		1	
Pedestrian Signal (Optically Programmed)		00		1	
Illuminated Sign		00		1	
Non-Illuminated Sign		00		1	
Traffic Signal on Span Wire		00		1	
Multi-Directional Traffic Signal on Span Wire		00		1	
Electrical Vault	EV	0	EV	2	

APPROVED BY THE BOARD OF PUBLIC WORKS
CHAIRMAN
ATTEST: SECRETARY

CITY OF SEATTLE
DEPARTMENT OF ENGINEERING

Standard Symbols

Standard Plan No. 003f

ITEM	EXISTING	PEN SIZE	CONSTRUCT	PEN SIZE	REMARKS
ELECTRICAL					
Electrical Cable (Direct Burial)	ECb	0	ECb	2or3	
Electrical Conduit	1" ECd	0	1" ECd	2or3	
Electrical Duct	12"x12" ED	0	12"x12" ED	1or2	
Combined Electrical & Telephone Duct	12"x12" ED-TD	0	12"x12" ED-TD	1or2	
Traffic Signal Conduit	2" TrCd	0	2" TrCd	2or3	
Traffic Signal Cable	TrCb	0	TrCb	2or3	
*Detector Loop- Dipole (Loop Schedule)		00		1	
*Detector Loop Quadrapole (Loop Schedule)		00		1	
Pressure Detector		00			
Span Wire		00		2	
Aerial Interconnect Cable	AIC	00	AIC	2	
*Handhole	HH	00	HH		
*Traffic Control Handhole	HH	00	TCHH		
*Street Light Handhole	HH	00	SLHH		
*Ground Rod Handhole	HH	00	GRHH		

* Draw to Actual Size

APPROVED BY THE BOARD OF PUBLIC WORKS
CHAIRMAN
ATTEST: SECRETARY

CITY OF SEATTLE.
DEPARTMENT OF ENGINEERING

Standard Symbols

Standard Plan No. 003g

ITEM	EXISTING	PEN SIZE	CONSTRUCT	PEN SIZE	REMARKS
UTILITIES					
Telephone Cable (Direct Burial)	TCb	0			
Telephone Conduit	3" TCd	0			
Telephone Duct	12"x12" TD	0			
Telephone Enclosure	Encl	0			
Television Cable (Direct Burial)	TVCb	0			
Steam Log	6" Stm 14"x14" Log	0			
Steam Vault	Steam Vault	0			
Gas Main	12" G	0	6/10 w/ both dash		
Gas Valve		0			
Gas Meter	GM	0			
Gas Regulator	G Reg	0			
Petroleum or Oil	Oil	0			
Telephone Manhole	TMH	0			
Telephone Handhole	THH	0			
Television Handhole	TVHH	0			
Telegraph Manhole	Teleg MH	0			

APPROVED BY THE BOARD OF PUBLIC WORKS
10/31/ 19[illegible]
CHAIRMAN
ATTEST: SECRETARY

CITY OF SEATTLE
DEPARTMENT OF ENGINEERING

Standard Symbols

Standard Plan No. 003h

SIGNALIZATION IDENTIFICATION SYMBOLS

- Vehicle & Pedestrian Signal Head. (Identification Number)
- Traffic Sign (Identification Number)
- Cable Runs (Run Number-per Wiring Schedule)
- Removal Item (Identification Number-per Removal Plan)
- Construction Item (Identification Number-per Signal Plan)

Signal Poles, Signal Pedestals, Push Button Pedestals & Push Buttons Identified by Number on Signal Plan.

APPROVED BY THE BOARD OF PUBLIC WORKS
10/31/ 19[illegible]
CHAIRMAN
ATTEST: SECRETARY

CITY OF SEATTLE
DEPARTMENT OF ENGINEERING

Standard Symbols

Standard Plan No. 003i

APPROVED BY THE BOARD OF PUBLIC WORKS
10-31 19 [illegible]
CHAIRMAN
ATTEST: [illegible]
SECRETARY

CITY OF SEATTLE
DEPARTMENT OF ENGINEERING

Standard Symbols

ITEM	EXISTING	PEN SIZE	CONSTRUCT	PEN SIZE	REMARKS
TOPOGRAPHIC & MISCELLANEOUS					
Monument (May not be in Case)					P4050 (2)
Monument in Case		00			P4050 (2)
Brass Plug		00			
Tack		00			
Hub		00			
Center Line		00			
Monument Line		00			
Survey Line		00			
Permanent Easement Line					M 451 (1)
Temp Const Easement Line					M 451 (1)
Dimension Line		00		0	
Match Line				1	
Lot & Ownership Line		00			
Right of Way Line		2½			
State Highway R/W	State R/W	2½			P4050 (2)
Building					P4050 (2)
Chain Link Fence		00		1	
Wood Fence		00		1	
Ground, Grade Line		0		0	
Vacated Street or Alley		2½			

(1) Chartpak Stock Number (2) Prestype Stock Number

Standard Plan No. 003j

APPROVED BY THE BOARD OF PUBLIC WORKS
10-31 19 [illegible]
CHAIRMAN
ATTEST: [illegible]
SECRETARY

CITY OF SEATTLE
DEPARTMENT OF ENGINEERING

Standard Symbols

ITEM	EXISTING	PEN SIZE	CONSTRUCT	PEN SIZE	REMARKS
TOPOGRAPHIC & MISCELLANEOUS					
Contours	246	00	246	1	
Depression		00		1	
Top of Cut Toe of Fill			Top of Cut Toe of Fill	0	
Slope Line			Slope Line	1	
Grade (Arrow Downhill)	22.3%	00	22.3%	00	
Vertical Curve	V|C	00	V|C	00	
Tree <12" Dia		00	Per Plan		(3)
Tree ≥12" Dia		00	Per Plan		(3)
Rock Facing		00		1	
Guard Rail		00		1	
Abandon(ed)	2" ECd (Aban)	00	Aban 2" ECd	0	
Test Hole and Number	TH-7	0			P4050 (2)
City of Seattle Datum	CITY of SEATTLE DATUM				P4050 (2)
North Arrow			N		P4050 (2)

(2) Prestype Stock Number (3) Symbols for trees and landscaping to be identified in legend for project

Standard Plan No. 003k

Standard Plan No. 010

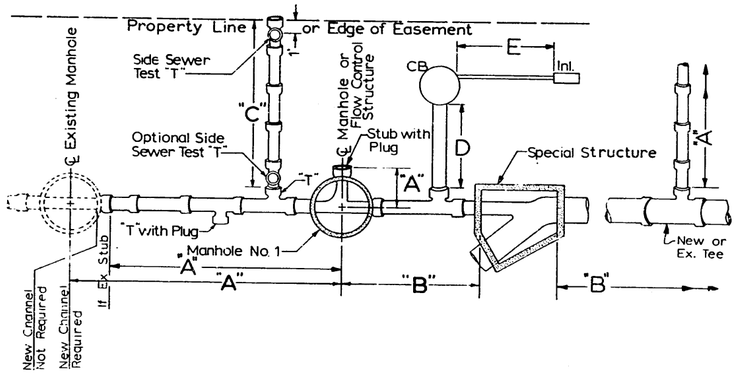

Payment Shall Be Made For :

1 Pipe "A","B" or "C" - Per Linear Foot.
2 Tees or Wyes, including plug - Unit Price Each
3 Catch Basin connection "D" and Inlet connection "E" - Per Linear Foot.

Note:
All Pipe shall be measured on the slope along the ℄ of Pipe.

Ref. Std. Spec. Sec. 7-17.

Do Not Scale

APPROVED BY THE BOARD OF PUBLIC WORKS 12/6, 19[illegible] CHAIRMAN ATTEST: [illegible] EXEC SECRETARY	CITY OF SEATTLE DEPARTMENT OF ENGINEERING	Sewer/ Drainage Payment Diagram

Standard Plan No. 020

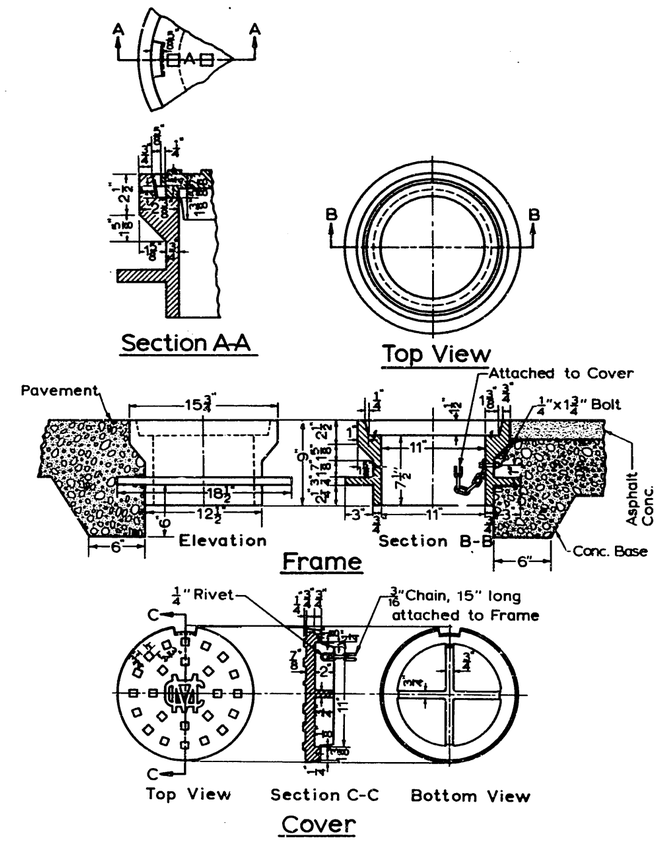

Notes:
1 Frame and Cover shall be tested for accuracy of fit and shall be marked in sets for delivery.
2 Frame and Cover shall be cast iron and have bituminous coating applied to all faces.

Ref. Std. Spec. Sec. 8-13.

Do Not Scale

APPROVED BY THE BOARD OF PUBLIC WORKS 10/31, 19[illegible] CHAIRMAN ATTEST: [illegible] EXEC SECRETARY	CITY OF SEATTLE DEPARTMENT OF ENGINEERING	Monument Frame and Cover

Standard Plan No. 030

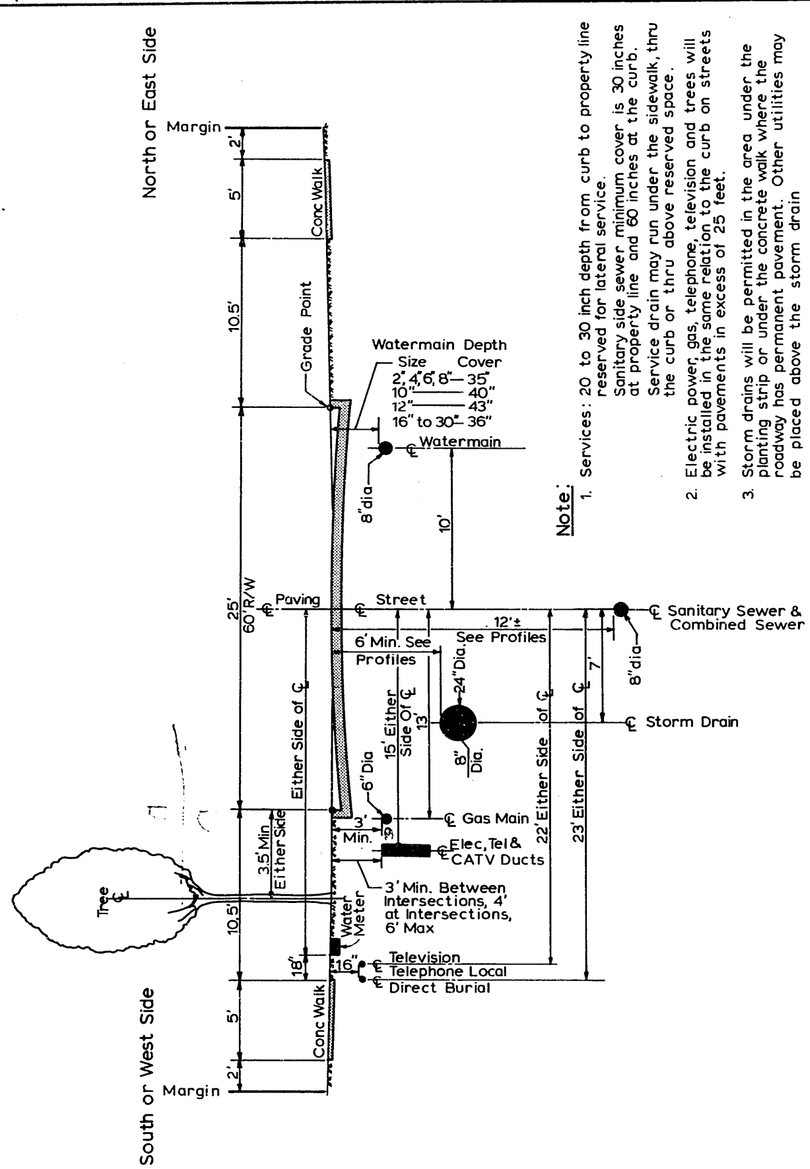

Note:

1. Services: 20 to 30 inch depth from curb to property line reserved for lateral service. Sanitary side sewer minimum cover is 30 inches at property line and 60 inches at the curb. Service drain may run under the sidewalk, thru the curb or thru above reserved space.
2. Electric power, gas, telephone, television and trees will be installed in the same relation to the curb on streets with pavements in excess of 25 feet.
3. Storm drains will be permitted in the area under the planting strip or under the concrete walk where the roadway has permanent pavement. Other utilities may be placed above the storm drain
4. Layout is applicable to 60' R/W and 25' residential paving.

APPROVED BY THE BOARD OF PUBLIC WORKS 10/01, 1986 CHAIRMAN ATTEST: EXEC SECRETARY	CITY OF SEATTLE DEPARTMENT OF ENGINEERING	Standard Locations for Underground Utilities (Residential Street)

Standard Plan No. 031

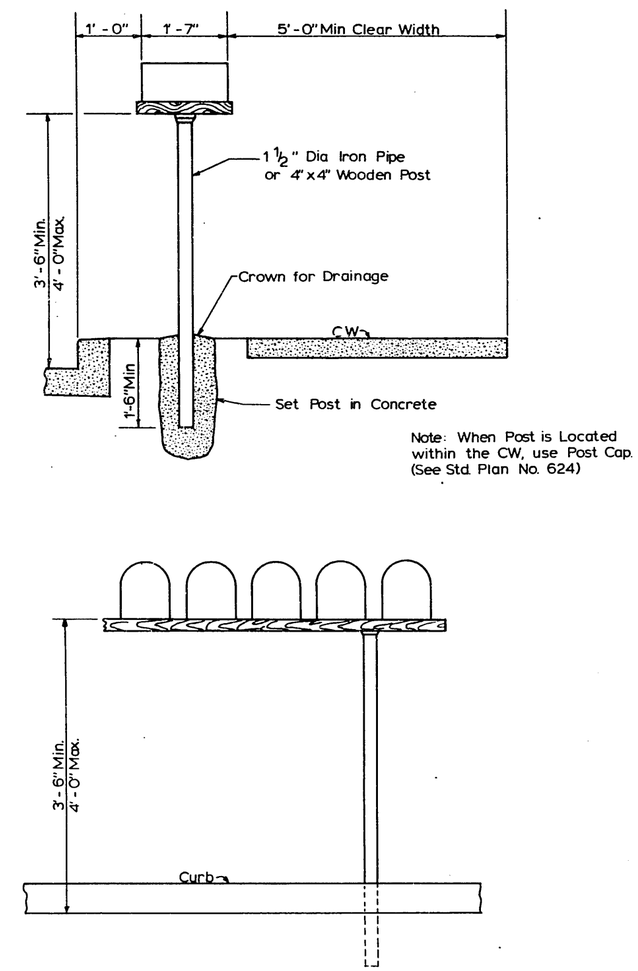

Do Not Scale

APPROVED BY THE BOARD OF PUBLIC WORKS 10/01, 1986 CHAIRMAN ATTEST: EXEC SECRETARY	CITY OF SEATTLE DEPARTMENT OF ENGINEERING	Mailbox Mounting (Residential)

Standard Plan No.100

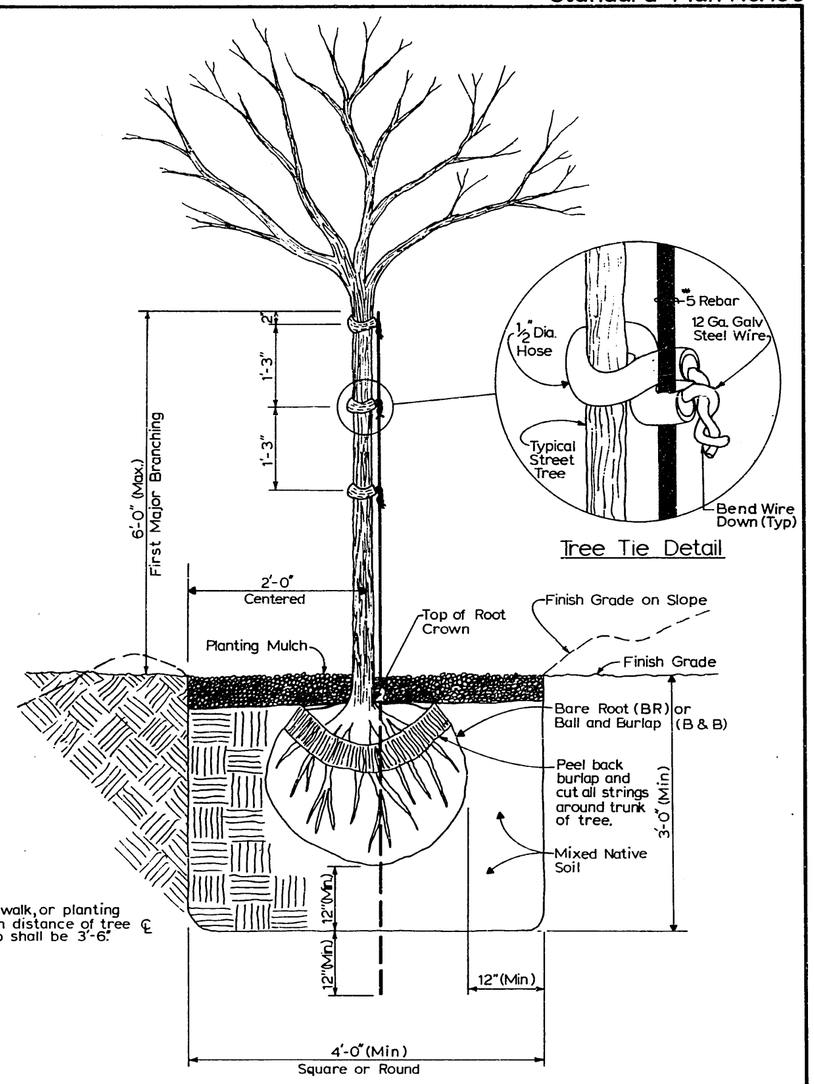

Tree Tie Detail

Notes:
In roadway sidewalk, or planting strip minimum distance of tree ℄ to face of curb shall be 3'-6".

Ref. Std. Spec. Sec. 9-14.

APPROVED BY THE BOARD OF PUBLIC WORKS 10/31, 19[illegible] CHAIRMAN ATTEST: [illegible] EXEC SECRETARY	CITY OF SEATTLE DEPARTMENT OF ENGINEERING	Deciduous Tree Planting

Standard Plan No.101

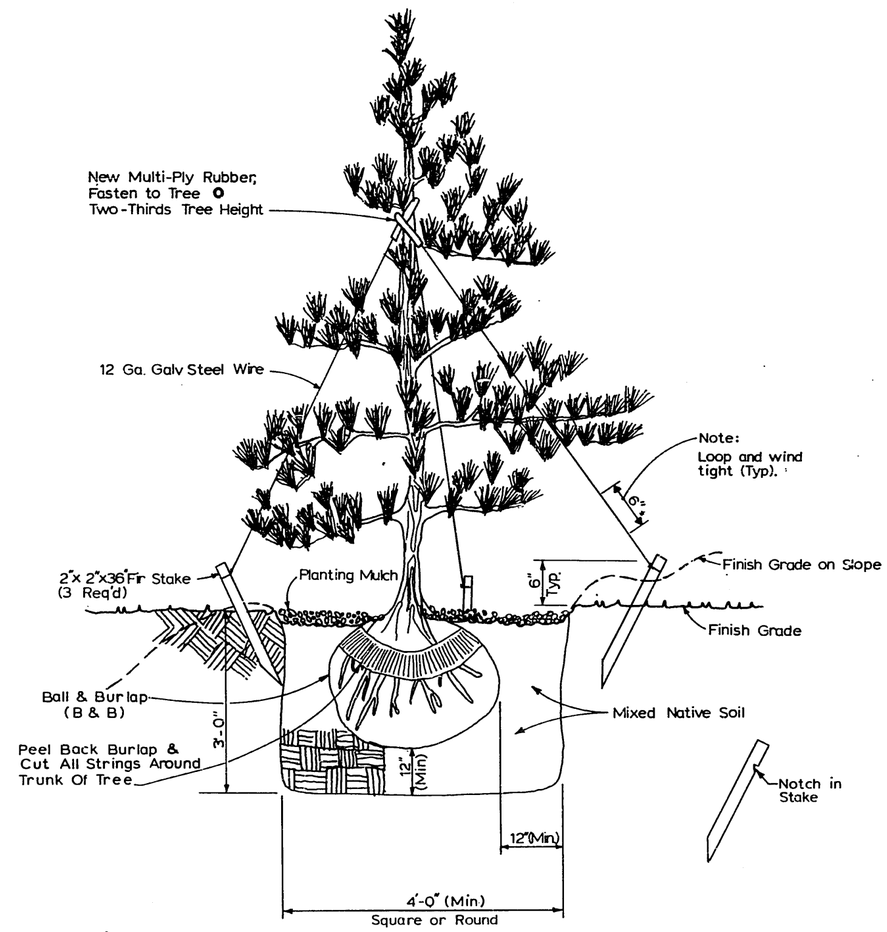

NOTE: Three Guy Stakes Located Equal Intervals Around Tree. Drive Stakes 60° From Horizontal. Locate Stakes Inside Dripline.

Ref. Std. Spec. Sec. 9-14.

APPROVED BY THE BOARD OF PUBLIC WORKS 10/31, 19[illegible] CHAIRMAN ATTEST: [illegible] EXEC SECRETARY	CITY OF SEATTLE DEPARTMENT OF ENGINEERING	Coniferous Tree Planting

Standard Plan No. 110

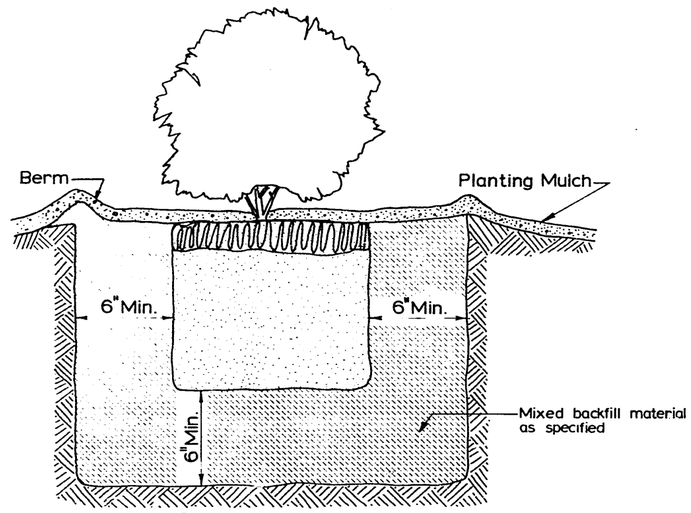

Planting On Level Grade

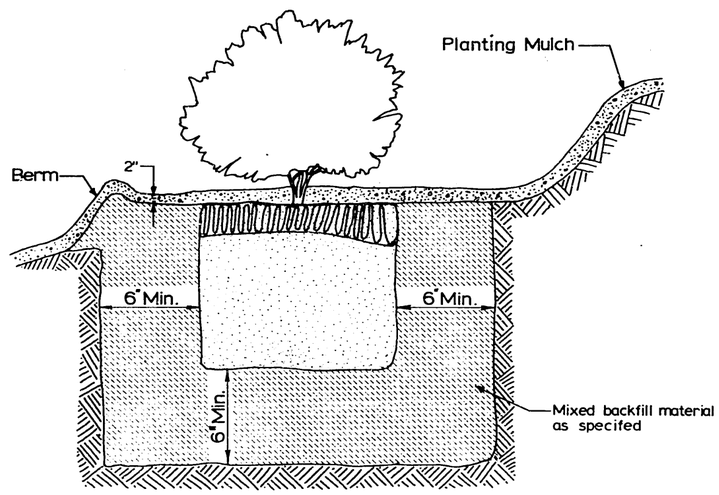

Planting On A Slope

Ref. Std. Spec. Sec. 9-14.

APPROVED BY THE BOARD OF PUBLIC WORKS 10/3, 19[illegible] CHAIRMAN ATTEST: [illegible] EXEC SECRETARY	CITY OF SEATTLE DEPARTMENT OF ENGINEERING	Shrub Planting

Standard Plan No. 111

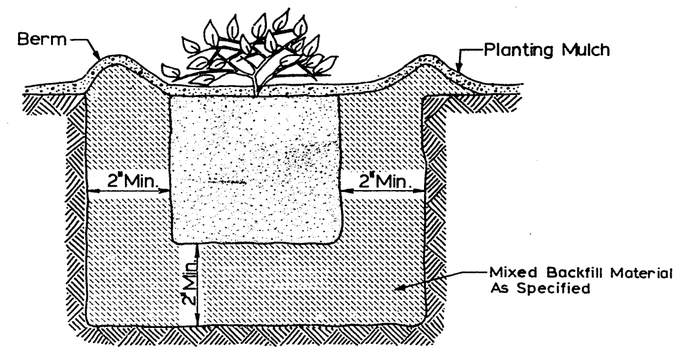

Planting On Level Grade

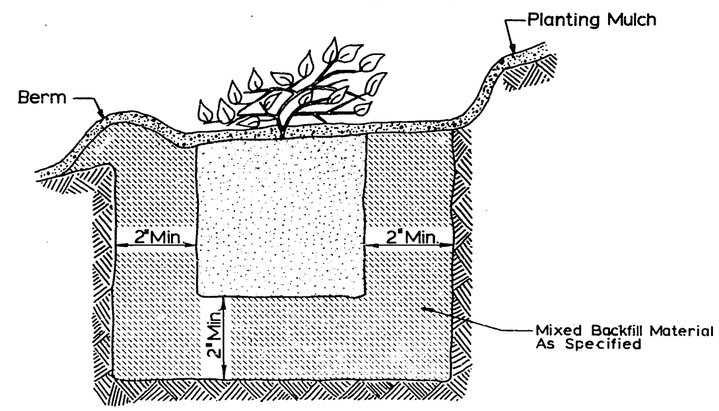

Planting On A Slope

Ref. Std. Spec. Sec. 9-14.

APPROVED BY THE BOARD OF PUBLIC WORKS 10/21, 19[illegible] CHAIRMAN ATTEST: [illegible] EXEC SECRETARY	CITY OF SEATTLE DEPARTMENT OF ENGINEERING	Ground Cover Planting

Standard Plan No. 112

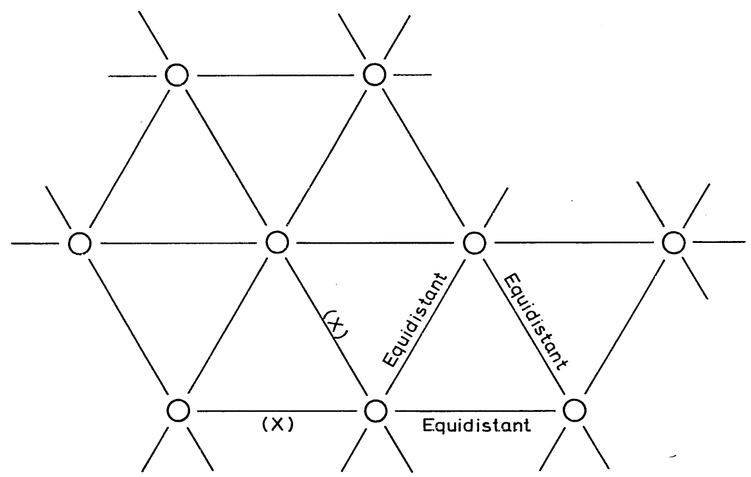

Distance (X) as specified on the plans

Ref. Std. Spec. Sec. 9-14.

APPROVED BY THE BOARD OF PUBLIC WORKS 10/31, 19[illegible] CHAIRMAN ATTEST: [illegible] EXEC SECRETARY	CITY OF SEATTLE DEPARTMENT OF ENGINEERING	Planting Pattern

Standard Plan No. 120

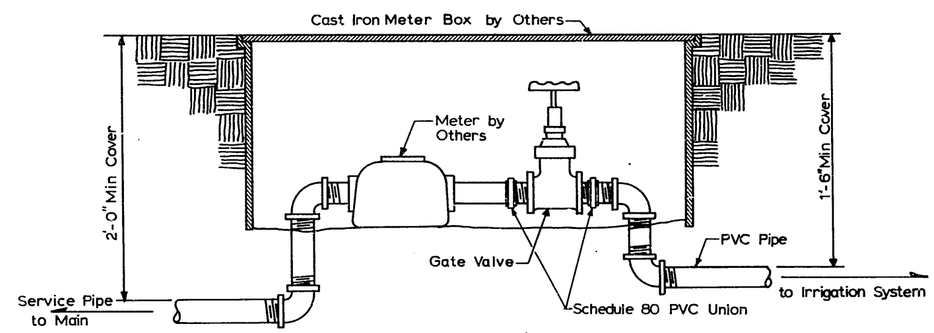

Ref. Std. Spec. Sec. 8-03.

Do Not Scale

APPROVED BY THE BOARD OF PUBLIC WORKS 10/31, 19[illegible] CHAIRMAN ATTEST: [illegible] EXEC SECRETARY	CITY OF SEATTLE DEPARTMENT OF ENGINEERING	Irrigation Meter Assembly

Standard Plan No. 121

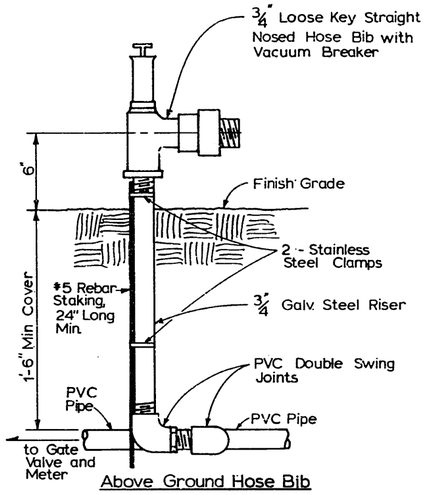

Above Ground Hose Bib

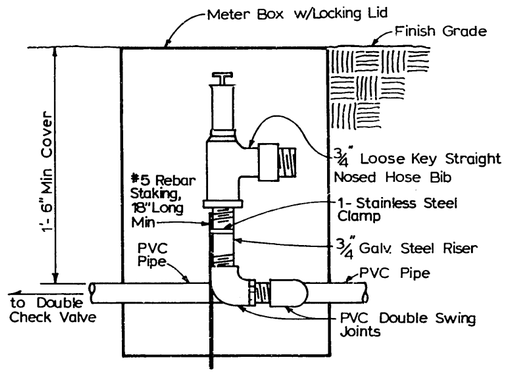

Below Ground Hose Bib

Ref. Std. Spec. Sec. 9-15.

Do Not Scale

APPROVED BY THE BOARD OF PUBLIC WORKS 10/31/1986 CHAIRMAN ATTEST: EXEC SECRETARY	CITY OF SEATTLE DEPARTMENT OF ENGINEERING	Hose Bib Assembly

Standard Plan No. 122

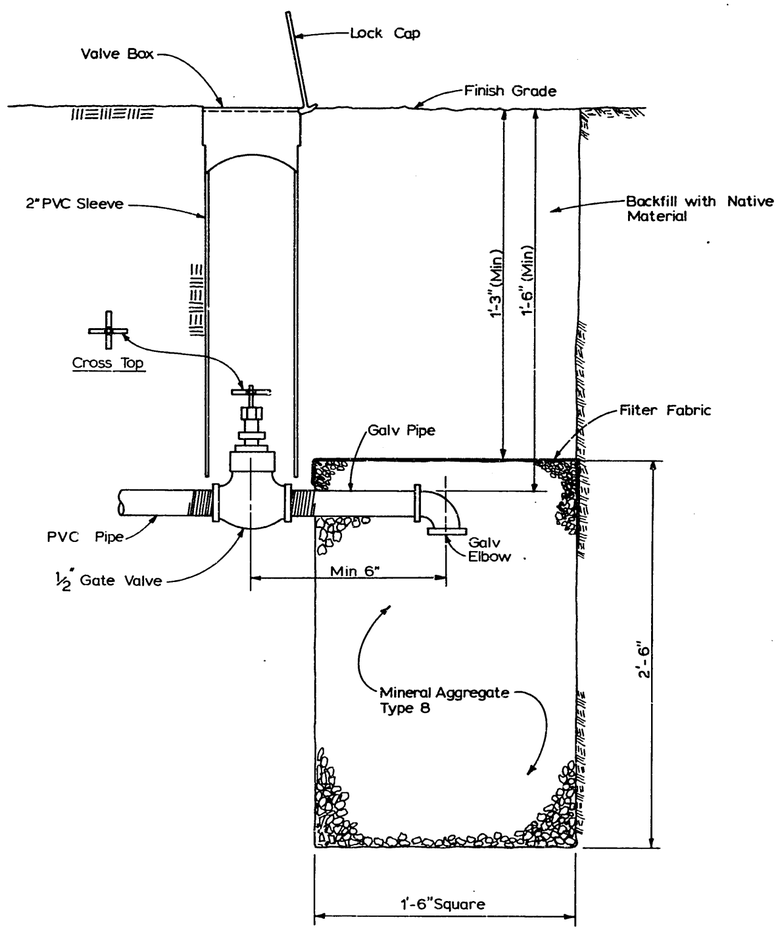

Ref. Std. Spec. Sec. 9-15.

Do Not Scale

APPROVED BY THE BOARD OF PUBLIC WORKS 10/31/1986 CHAIRMAN ATTEST: EXEC SECRETARY	CITY OF SEATTLE DEPARTMENT OF ENGINEERING	Drain Valve

Standard Plan No.130

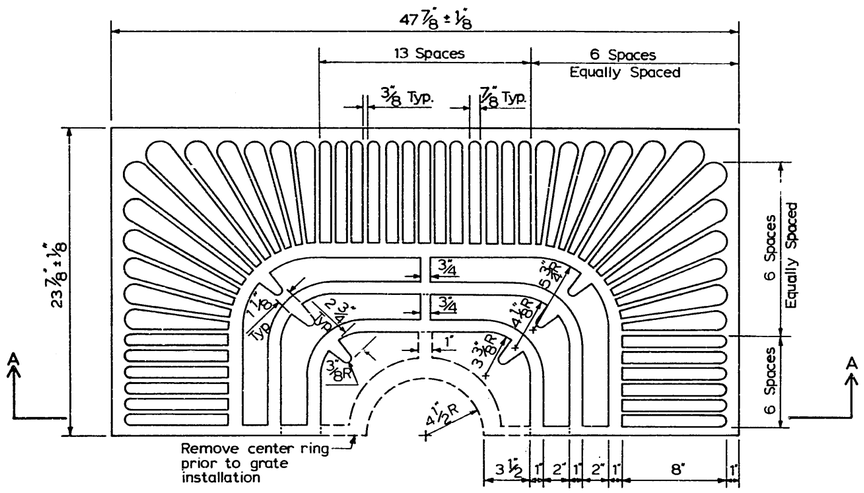

Plan
1 of 2 Pieces

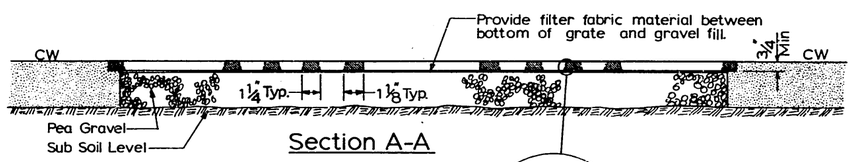

Section A-A

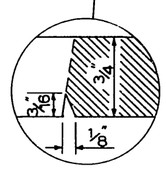

Groove Detail
6 Req'd

Notes:

1. Maximum weight of each tree grate casting shall be 110 lbs.
2. Dimension tolerance ± 1/8". except thickness shall be a minimum of 3/4".
3. Tree grate consists of 2 pieces.
4. Tree grate shall be made of ductile Iron.

Ref. Std. Spec. Sec. 8-02.

Do Not Scale

APPROVED BY THE BOARD OF PUBLIC WORKS 10/21, 19[illegible] CHAIRMAN ATTEST: [illegible] EXEC SECRETARY	CITY OF SEATTLE DEPARTMENT OF ENGINEERING	48" Sq. 2 Piece Tree Grate

Standard Plan No.140

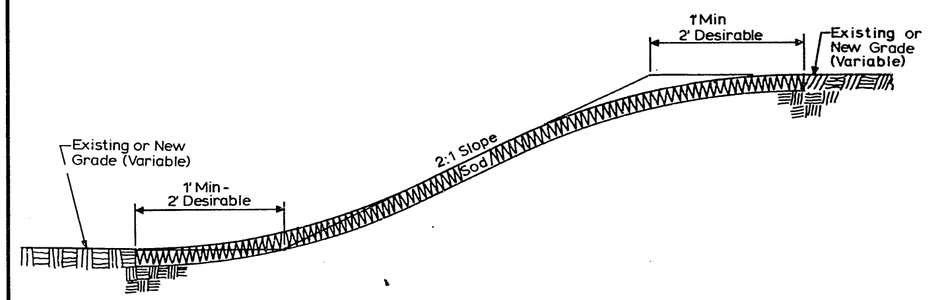

Ref. Std. Spec. Sec. 2-03.

APPROVED BY THE BOARD OF PUBLIC WORKS 10/21, 19[illegible] CHAIRMAN ATTEST: [illegible] EXEC SECRETARY	CITY OF SEATTLE DEPARTMENT OF ENGINEERING	Slope Rounding

Standard Plan No. 141

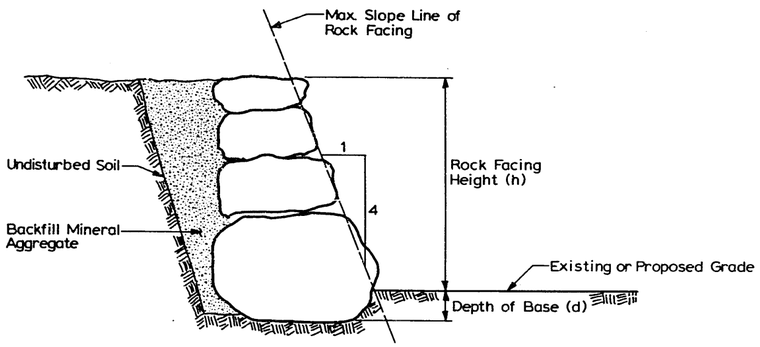

Section

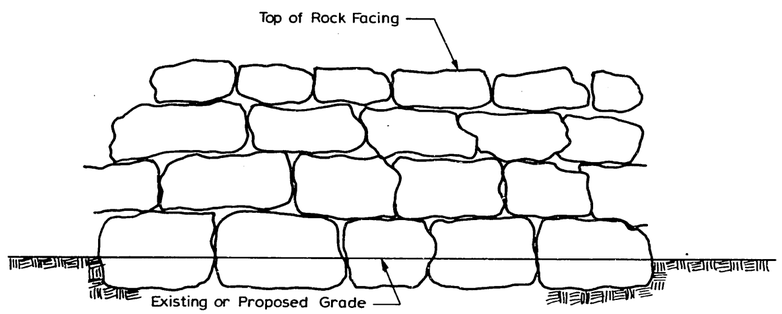

Elevation

(h)	(d)	Minimum Rock Size (Base)	Minimum Rock Size (Top)
2 feet	3 inches	2-man	1-man
4 feet	6 inches	3-man	2-man
6 feet	9 inches	4-man	2-man
8 feet	12 inches	5-man	2-man

Ref. Std. Spec. Sec. 2-08

APPROVED BY THE BOARD OF PUBLIC WORKS 10/21, 19 84 CHAIRMAN ATTEST: EXEC SECRETARY	CITY OF SEATTLE DEPARTMENT OF ENGINEERING	Rock Facing

Standard Plan No. 200a

Notes:

1. Type A Manhole Designates Manholes with Precast Concentric Cone Sections.
2. Type B Manhole Designates Manholes with Top Slabs.
3. Top Slab and Base Section Details, See Standard Plan No. 200b.
4. Maximum Dimension from Outside Manhole Wall to the first Pipe Joint. The Greater of 1/2 Pipe Diameter or 12 Inches.

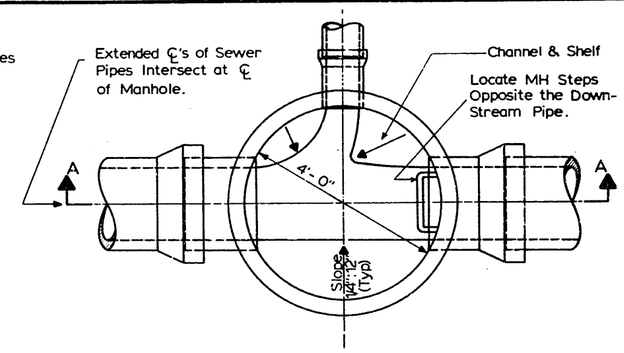

Plan View
(Top Removed)

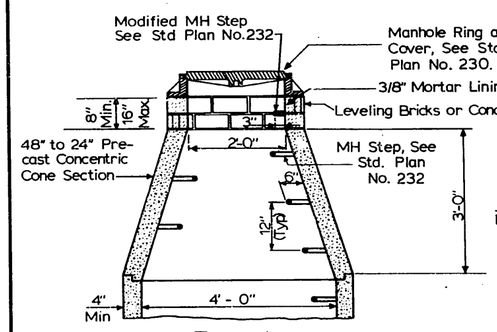

Type A

Section A-A

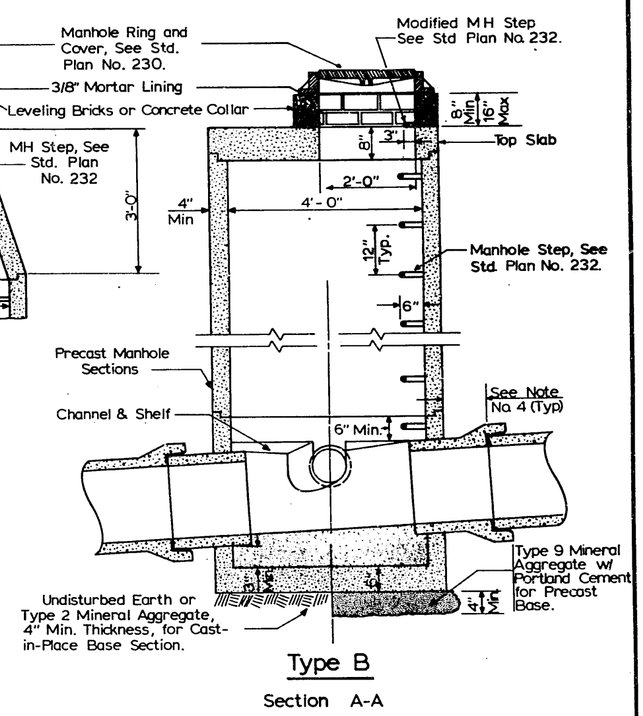

Type B

Section A-A

Ref. Std. Spec. Sec. 7-05

Do Not Scale

APPROVED BY THE BOARD OF PUBLIC WORKS 10/31, 19 84 CHAIRMAN ATTEST: EXEC SECRETARY	CITY OF SEATTLE DEPARTMENT OF ENGINEERING	Type 200 Manhole

Standard Plan No. 200b

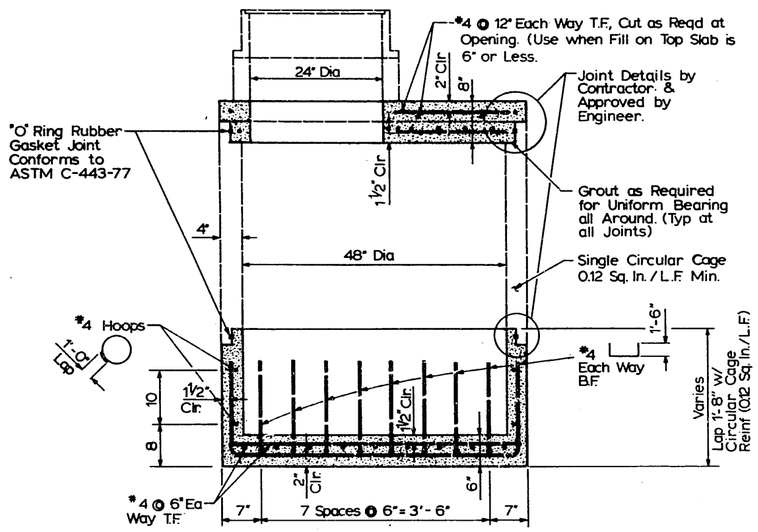

Section A-A

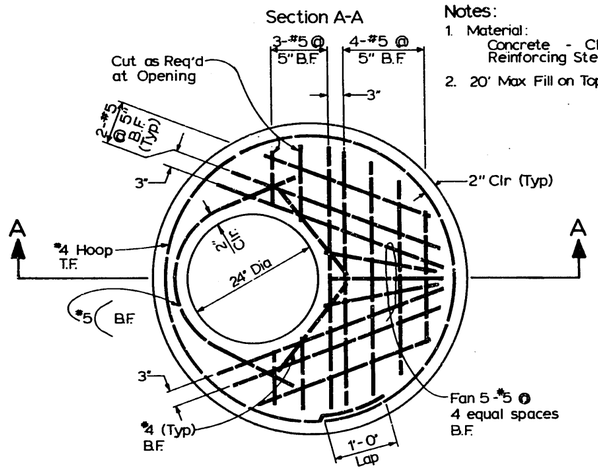

Type 200 MH-Top Slab

Notes:

1. Material:
   Concrete - Class AX
   Reinforcing Steel-ASTM A615 GR 60
2. 20' Max Fill on Top Slab.

Ref. Std. Spec. Sec. 7-05

Do Not Scale

APPROVED BY THE BOARD OF PUBLIC WORKS 10/31, 19 86 CHAIRMAN ATTEST: EXEC SECRETARY	CITY OF SEATTLE DEPARTMENT OF ENGINEERING	Type 200 Manhole Top & Bottom Slabs

Standard Plan No. 201a

Notes:

1. Type A Manhole Designates Manholes with Precast Concentric Cone Sections.
2. Type B Manhole Designates Manholes with Top Slabs.
3. Top Slab and Base Section Details, See Standard Plan No. 201b
4. Maximum Dimension from Outside Manhole Wall to the first Pipe Joint. The Greater of ½ Pipe Diameter or 12 Inches.

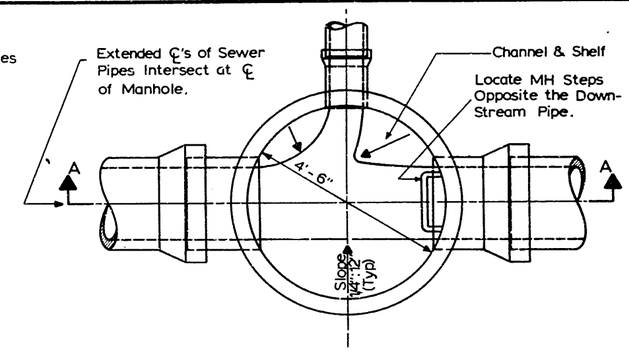

Plan View
(Top Removed)

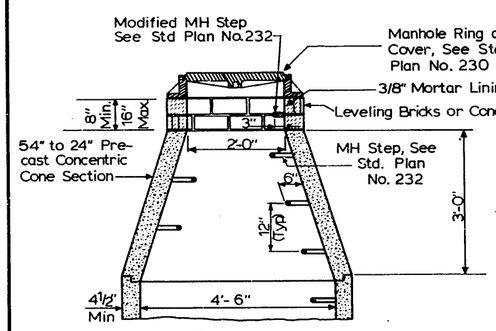

Type A

Section A-A

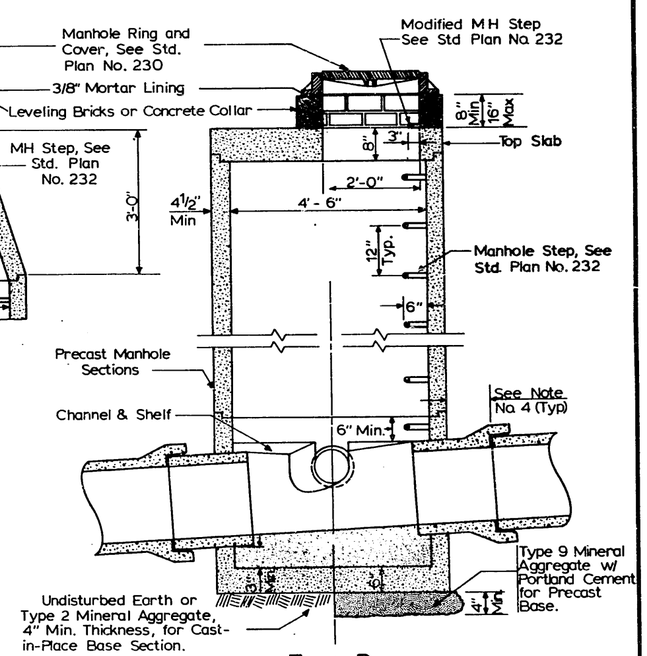

Type B

Section A-A

Ref. Std. Spec. Sec. 7-05

Do Not Scale

APPROVED BY THE BOARD OF PUBLIC WORKS 10/31, 19 86 CHAIRMAN ATTEST: EXEC SECRETARY	CITY OF SEATTLE DEPARTMENT OF ENGINEERING	Type 201 Manhole

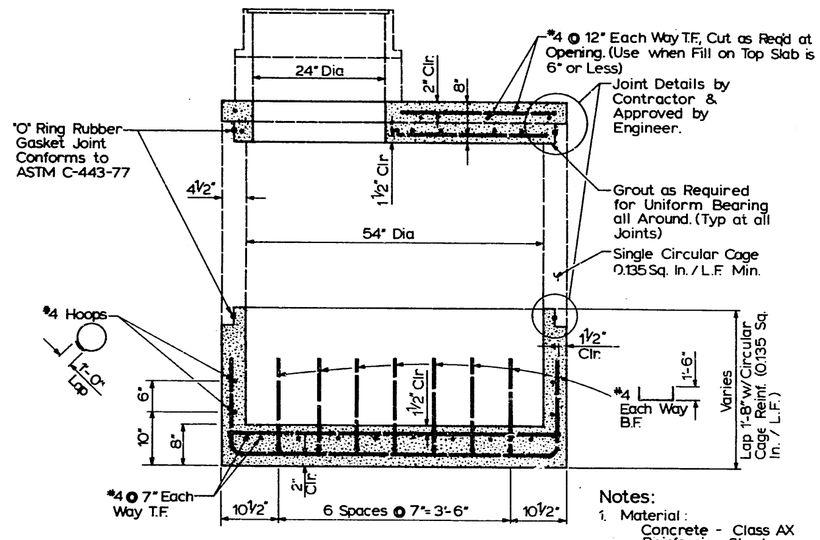

Section A-A

Notes:
1. Material:
   Concrete - Class AX
   Reinforcing Steel - ASTM A615-GR 60
2. 20' Max Fill on Top Slab.

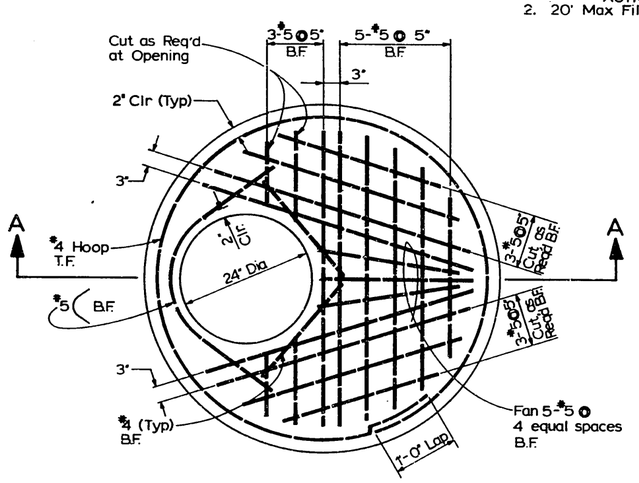

Type 201 MH-Top Slab

Ref. Std. Spec. Sec. 7-05

Do Not Scale

APPROVED BY THE BOARD OF PUBLIC WORKS 10/31, 1986 CHAIRMAN ATTEST: EXEC SECRETARY	CITY OF SEATTLE DEPARTMENT OF ENGINEERING	Type 201 Manhole Top & Bottom Slabs

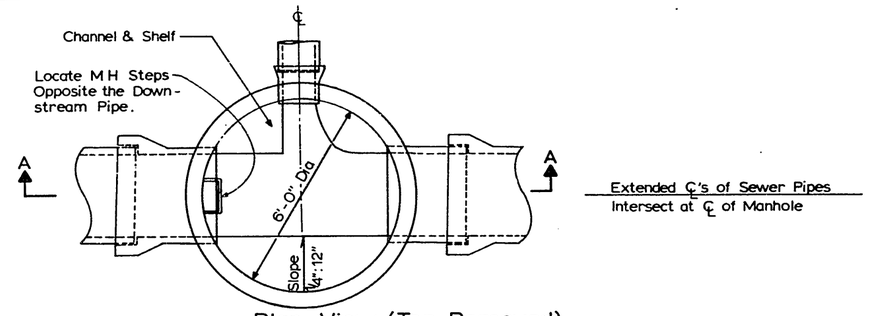

Extended ℄'s of Sewer Pipes Intersect at ℄ of Manhole

Plan View (Top Removed)

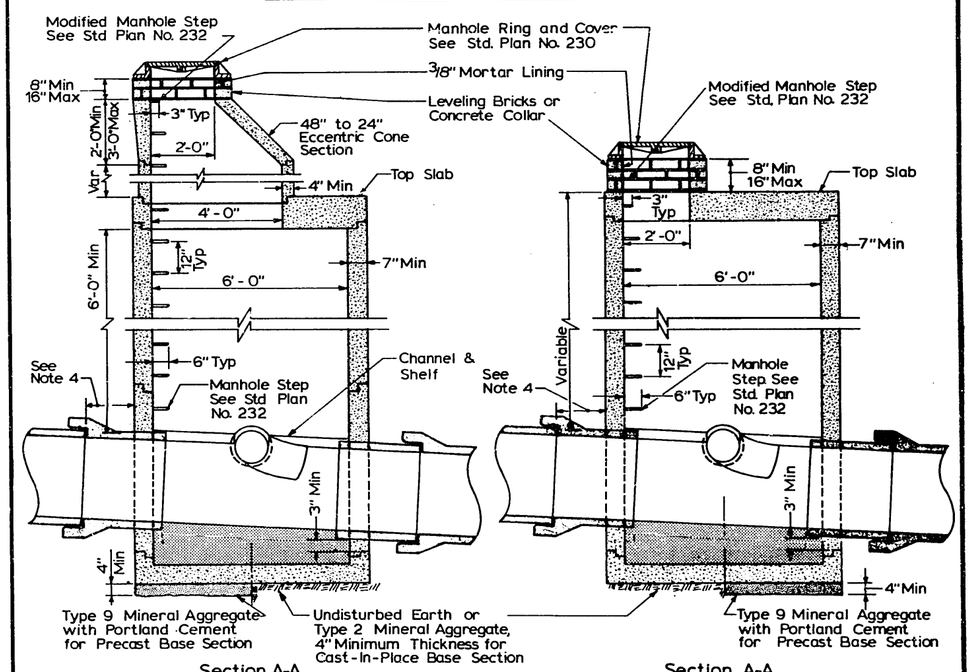

Section A-A
Type A

Section A-A
Type B

Notes:
1 MH 202 Type A designates a Manhole Top Slab with a 4'-0" Dia. Access.
2 MH 202 Type B designates a Manhole Top Slab with a 2'-0" Dia. Access.
3 Top Slab and Base Section, See Std. Plan No. 202b.
4 Max Dimension from outside MH Wall to the first pipe joint. The Greater of ½ Pipe Diameter or 12 Inches.

Ref. Std. Spec. Sec. 7-05

Do Not Scale

APPROVED BY THE BOARD OF PUBLIC WORKS 10/31, 1986 CHAIRMAN ATTEST: EXEC SECRETARY	CITY OF SEATTLE DEPARTMENT OF ENGINEERING	Type 202 Manhole

Standard Plan No. 202b

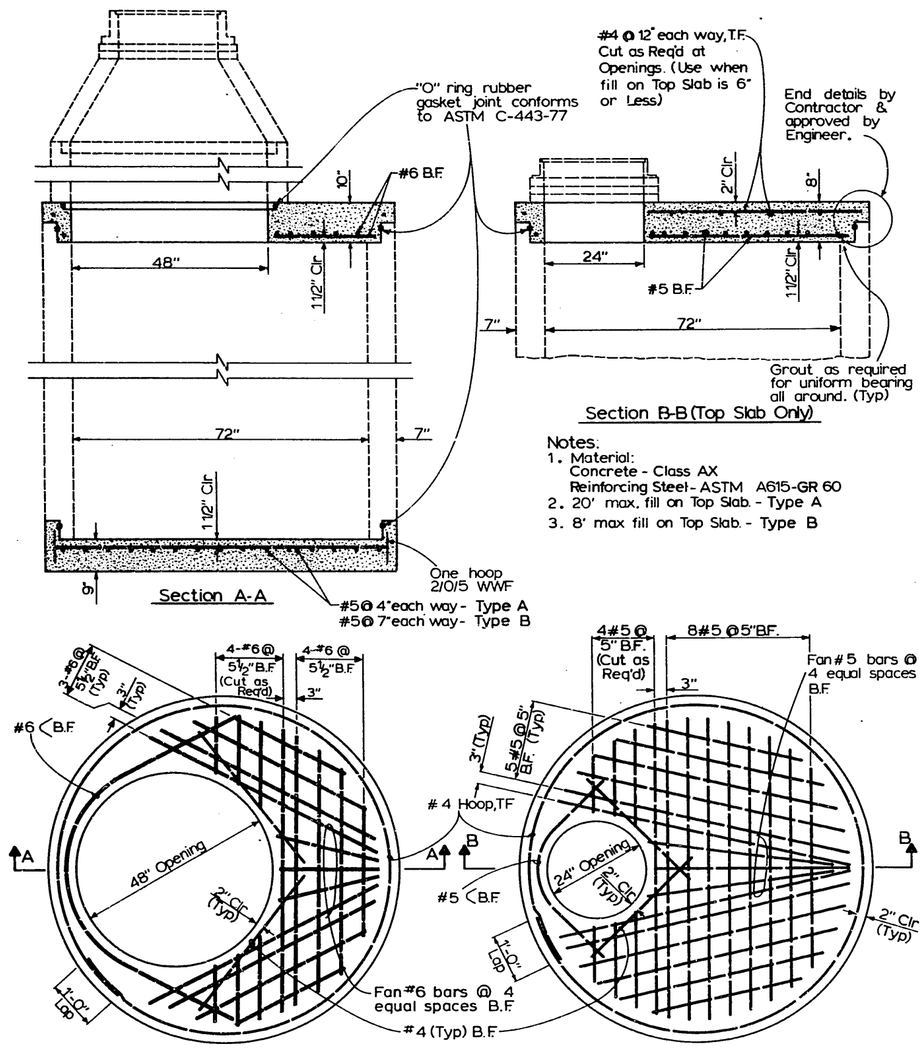

Notes:

1. Material:
   Concrete - Class AX
   Reinforcing Steel - ASTM A615-GR 60
2. 20' max. fill on Top Slab. - Type A
3. 8' max fill on Top Slab. - Type B

Ref. Std. Spec. Sec. 7-05

Do Not Scale

APPROVED BY THE BOARD OF PUBLIC WORKS 10/31, 1984 CHAIRMAN ATTEST: EXEC SECRETARY	CITY OF SEATTLE DEPARTMENT OF ENGINEERING	Type 202 Manhole Top & Bottom Slabs

Standard Plan No. 203a

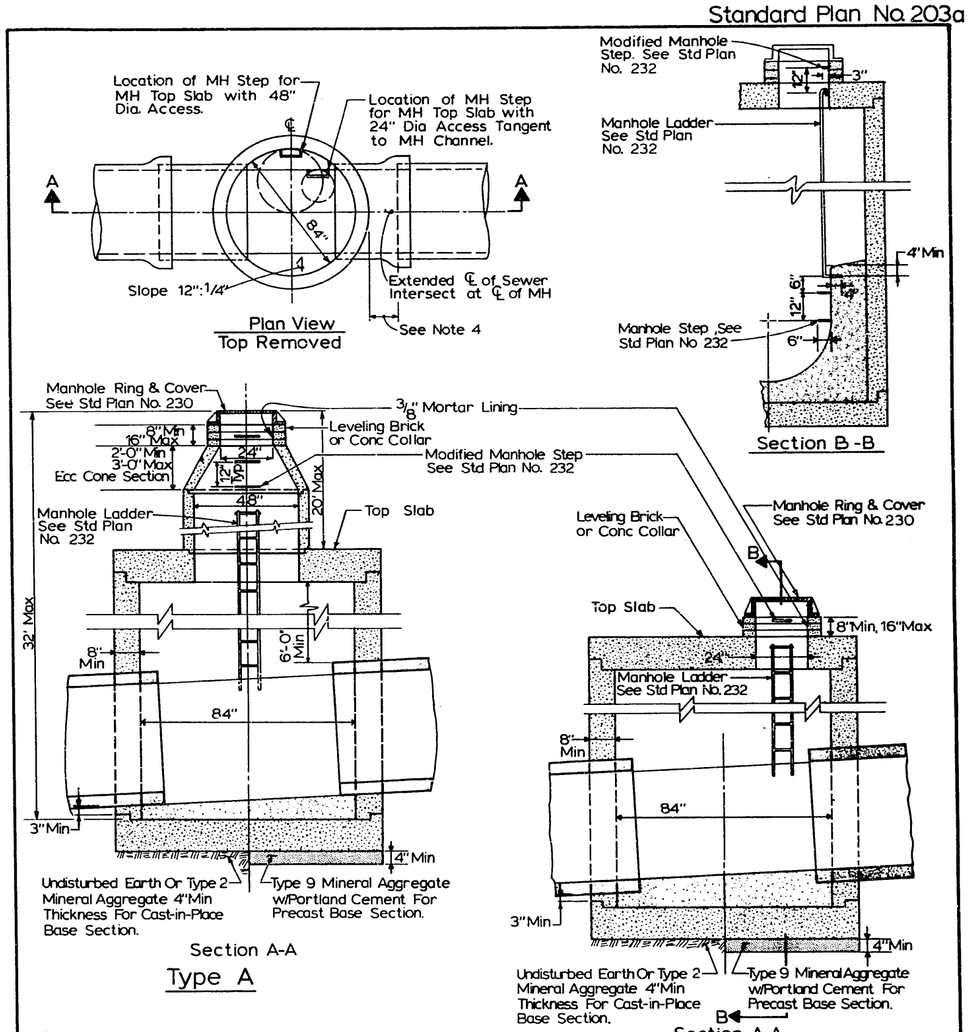

Notes:

1. Type A Manhole Designates A Manhole Top Slab With A 48" Dia. Access.
2. Type B Manhole Designates A Manhole Top Slab With A 24" Dia. Access.
3. Top Slab & Base Section Details, See Std. Plan No. 203b.
4. Max Dimension From Outside Manhole Wall to the first Pipe Joint. The Greater of 1/2 Pipe Diameter or 12 Inches.

Ref. Std. Spec. Sec. 7-05

Do Not Scale

APPROVED BY THE BOARD OF PUBLIC WORKS 10/31, 1984 CHAIRMAN ATTEST: EXEC SECRETARY	CITY OF SEATTLE DEPARTMENT OF ENGINEERING	Type 203 Manhole

Standard Plan No. 203b

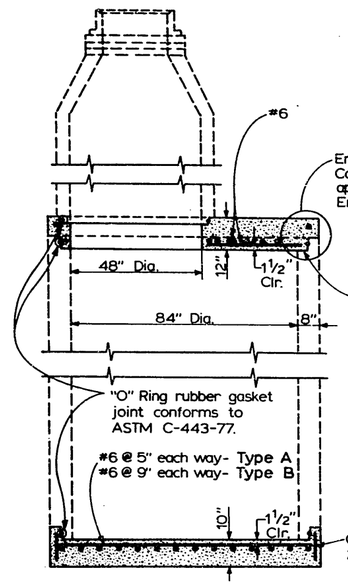

Section A-A

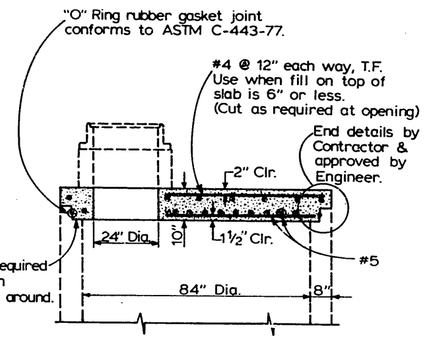

Section B-B (Top Slab Only)

Notes:

1. Materials:
   Concrete-Class AX
   Reinforcing-ASTM A615-GR-60
2. 20' Max. fill on top of slab- Type A
3. 8' Max. fill on top of slab- Type B

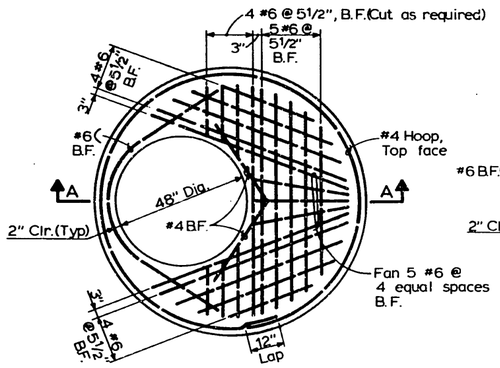

Type A MH Top Slab

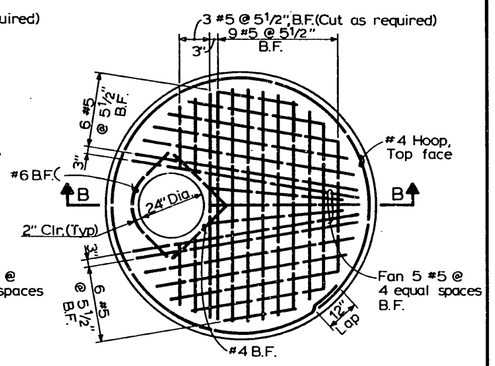

Type B MH Top Slab

Ref Std Spec Sec 7-05

Do Not Scale

APPROVED BY THE BOARD OF PUBLIC WORKS 10/31 1986 CHAIRMAN ATTEST: EXEC SECRETARY	CITY OF SEATTLE DEPARTMENT OF ENGINEERING	Type 203 Manhole Top & Bottom Slabs

Standard Plan No. 204a

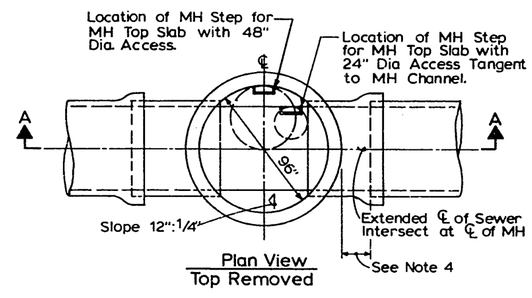

Plan View
Top Removed

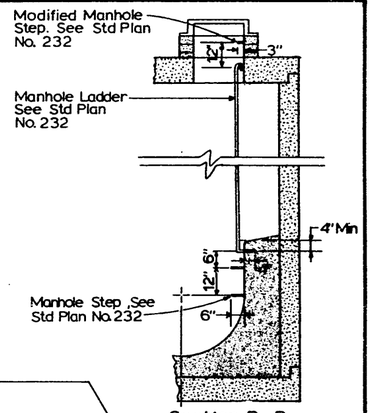

Section B-B

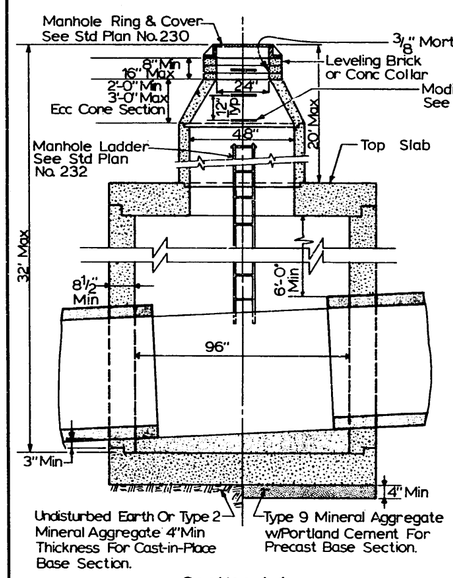

Section A-A
Type A

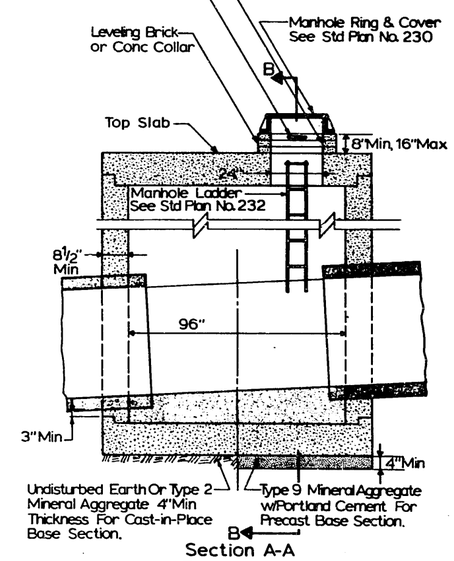

Section A-A
Type B

Notes:

1. Type A Manhole Designates A Manhole Top Slab With A 48" Dia. Access.
2. Type B Manhole Designates A Manhole Top Slab With A 24" Dia. Access.
3. Top Slab & Base Section Details, See Std. Plan No. 204b
4. Max Dimension From Outside Manhole Wall to the first Pipe Joint. The Greater of ½ Pipe Diameter or 12 Inches.

Do Not Scale

Ref. Std. Spec. Sec. 7-05.

APPROVED BY THE BOARD OF PUBLIC WORKS 10/31 1986 CHAIRMAN ATTEST: EXEC SECRETARY	CITY OF SEATTLE DEPARTMENT OF ENGINEERING	Type 204 Manhole

Standard Plan No. 204b

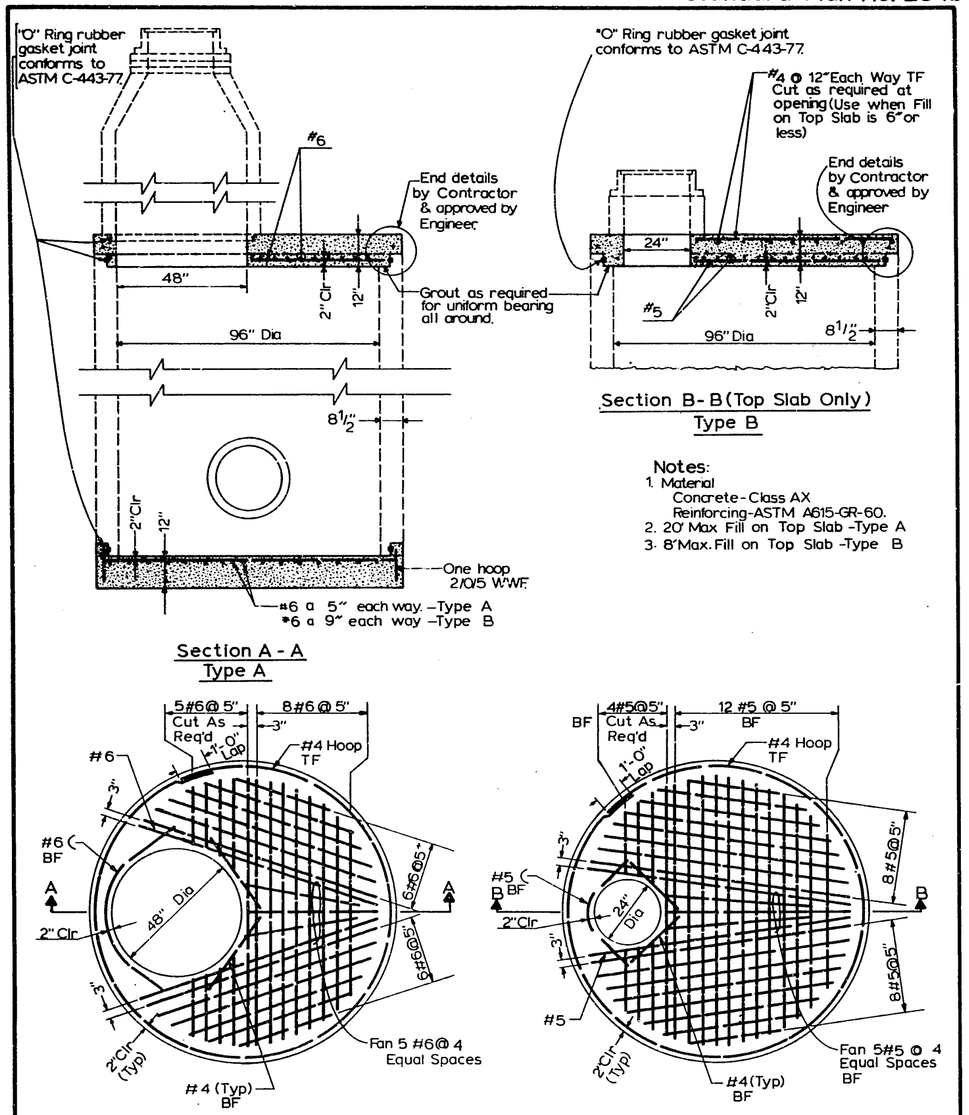

Notes:
1. Material
   Concrete - Class AX
   Reinforcing - ASTM A615-GR-60.
2. 20' Max Fill on Top Slab - Type A
3. 8' Max. Fill on Top Slab - Type B

Ref. Std. Spec. Sec. 7-05.

APPROVED BY THE BOARD OF PUBLIC WORKS 10/31, 1986 CHAIRMAN ATTEST: EXEC SECRETARY	CITY OF SEATTLE DEPARTMENT OF ENGINEERING	Type 204 Manhole Top & Bottom Slabs

Standard Plan No. 205a

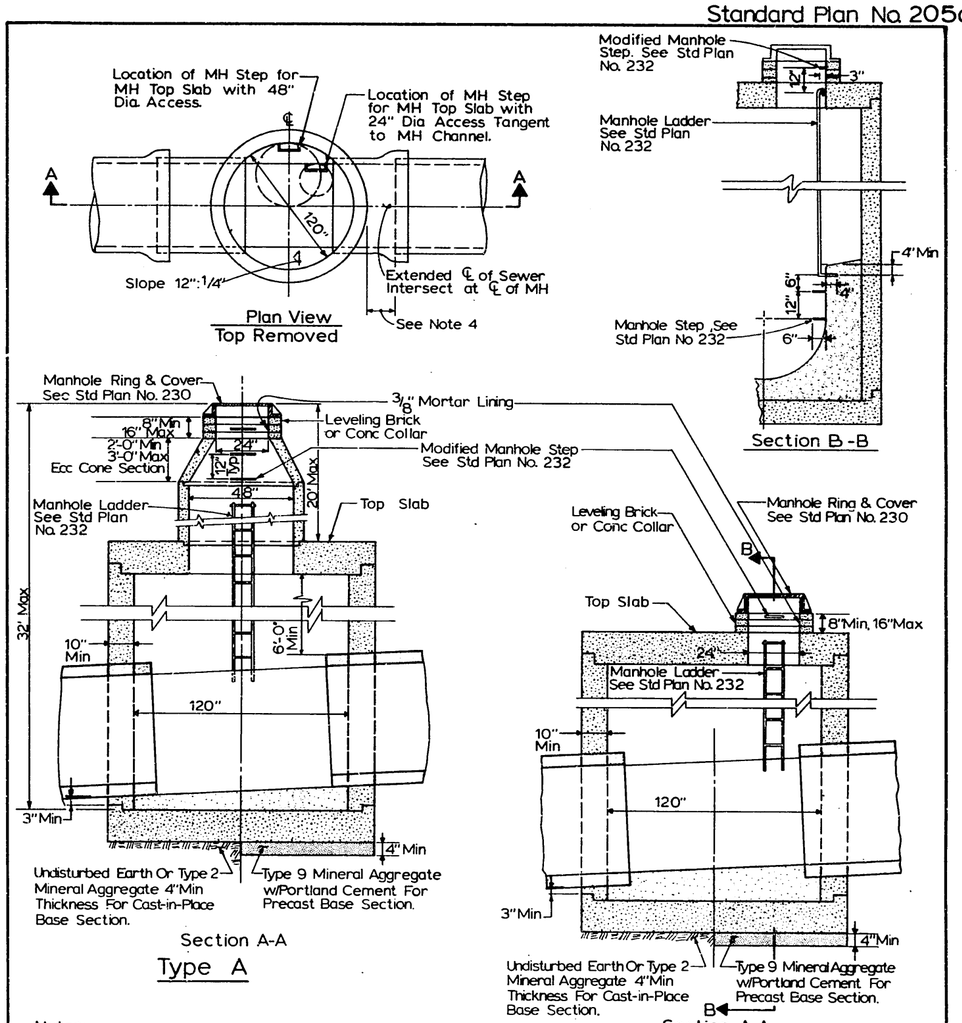

Notes:
1. Type A Manhole Designates A Manhole Top Slab With A 48" Dia. Access.
2. Type B Manhole Designates A Manhole Top Slab With A 24" Dia. Access.
3. Top Slab & Base Section Details, See Std. Plan No. 205b.
4. Max Dimension From Outside Manhole Wall to the first Pipe Joint. The Greater of 1/2 Pipe Diameter or 12 Inches.

Do Not Scale
Ref. Std. Spec. Sec. 7-05

APPROVED BY THE BOARD OF PUBLIC WORKS 12/1/, 19 CHAIRMAN ATTEST: EXEC SECRETARY	CITY OF SEATTLE DEPARTMENT OF ENGINEERING	Type 205 Manhole

Standard Plan No. 205b

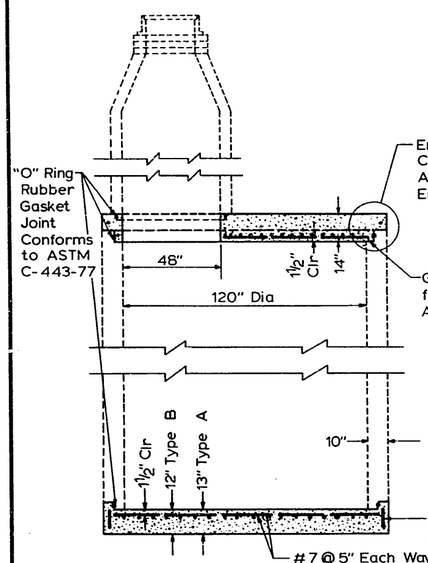

Section A - A
Type A

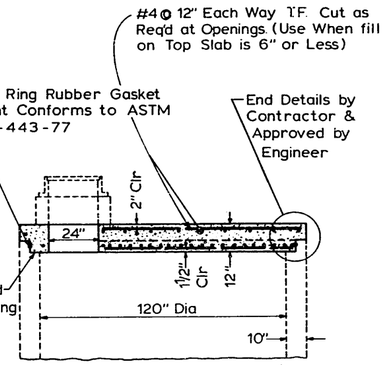

Section B - B (Top Slab Only)
Type B

Notes:

1. Material
   Concrete - Class AX
   Reinforcing - ASTM A615-GR-60.
2. 20' Max Fill on Top Slab - Type A
3. 8' Max Fill on Top Slab - Type B

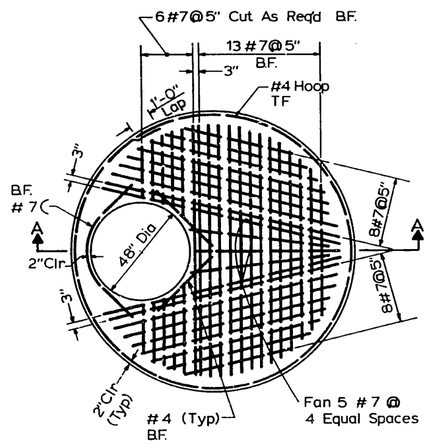

Type A MH Top Slab

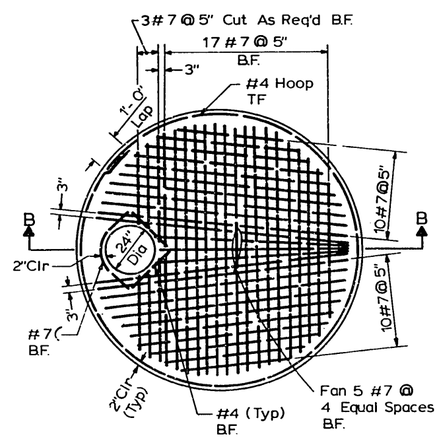

Type B MH Top Slab

Ref. Std. Spec. Sec. 7-05.

Do Not Scale

APPROVED BY THE BOARD OF PUBLIC WORKS 10/31, 1986 CHAIRMAN ATTEST: Barbara R. Talen EXEC SECRETARY	CITY OF SEATTLE DEPARTMENT OF ENGINEERING	Type 205 Manhole Top & Bottom Slabs

Standard Plan No. 206a

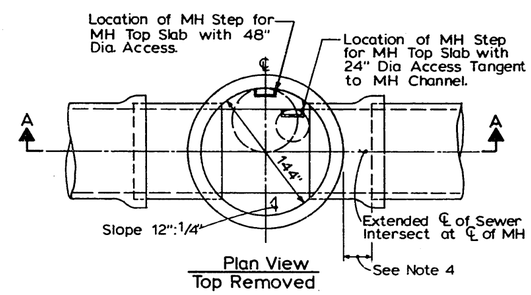

Plan View
Top Removed

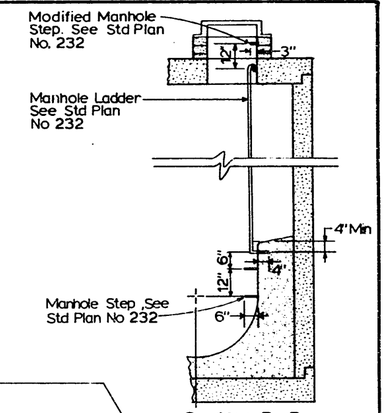

Section B-B

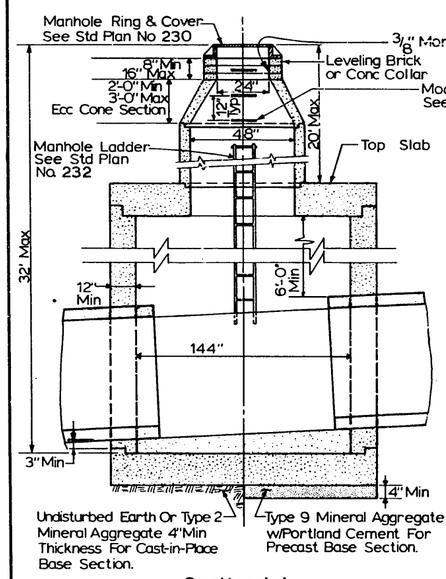

Section A-A
Type A

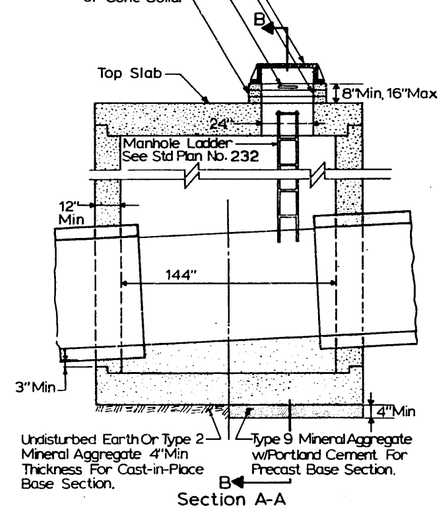

Section A-A
Type B

Notes:

1. Type A Manhole Designates A Manhole Top Slab With A 48" Dia. Access.
2. Type B Manhole Designates A Manhole Top Slab With A 24" Dia. Access.
3. Top Slab & Base Section Details, See Std. Plan No. 206b.
4. Max Dimension From The Outside Wall Of The Manhole To The First Pipe Joint. The Greater of 1/2 Pipe Diameter or 12 Inches.

Do Not Scale

Ref. Std. Spec. Sec. 7-05.

APPROVED BY THE BOARD OF PUBLIC WORKS 10/31, 1986 CHAIRMAN ATTEST: Barbara R. Talen EXEC SECRETARY	CITY OF SEATTLE DEPARTMENT OF ENGINEERING	Type 206 Manhole

Standard Plan No. 206b

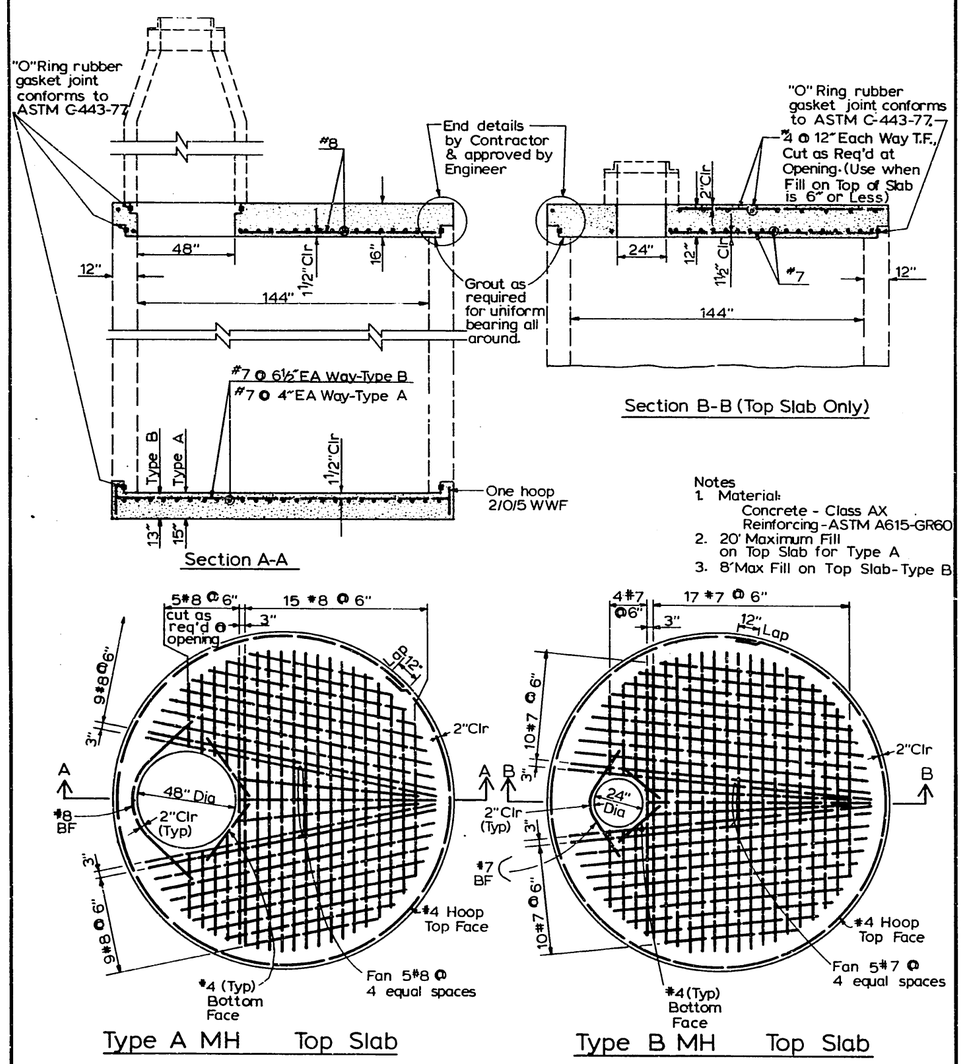

Notes
1. Material:
   Concrete - Class AX
   Reinforcing - ASTM A615-GR60
2. 20' Maximum Fill on Top Slab for Type A
3. 8' Max Fill on Top Slab - Type B

Ref. Std. Spec. Sec. 7-05.

Do Not Scale

APPROVED BY THE BOARD OF PUBLIC WORKS 10/21, 1976 CHAIRMAN ATTEST: EXEC SECRETARY	CITY OF SEATTLE DEPARTMENT OF ENGINEERING	Type 206 Manhole Top & Bottom Slabs

Standard Plan No. 207

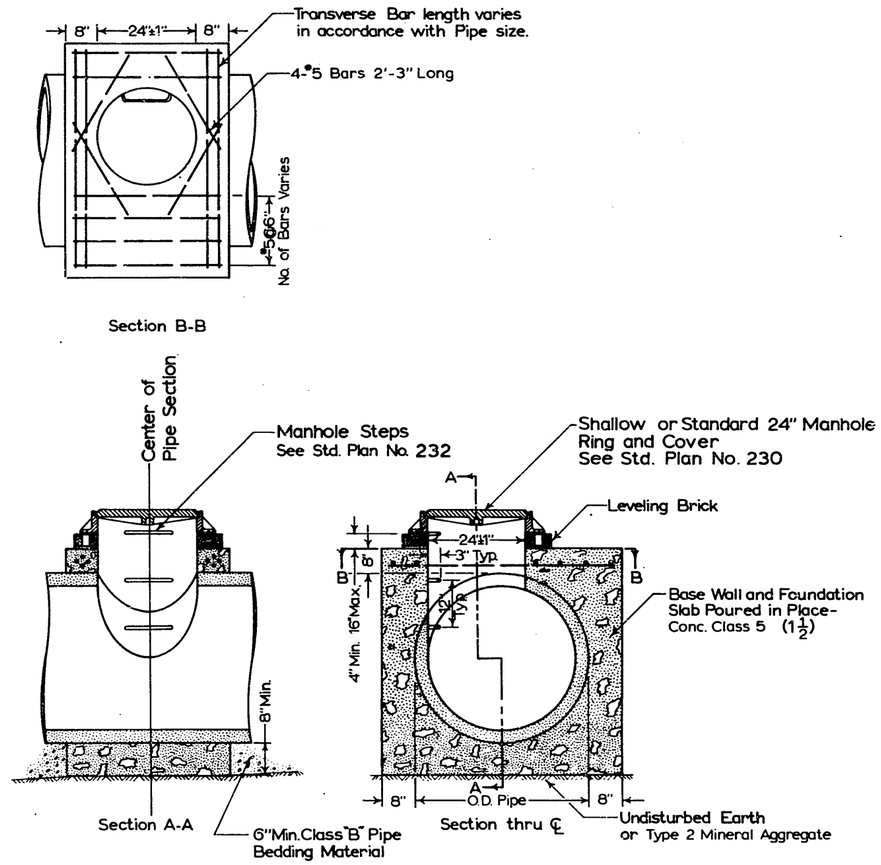

Note:

1. Reinforcing Steel shall be deformed bars conforming to ASTM A-15 and shall have a min. cover of 2".

Pipe Dia. 24" Min. - 42" Max.

Ref. Std. Spec. Sec. 7-05.

Do Not Scale

APPROVED BY THE BOARD OF PUBLIC WORKS 10/21, 1976 CHAIRMAN ATTEST: EXEC SECRETARY	CITY OF SEATTLE DEPARTMENT OF ENGINEERING	Type 207 Manhole

Standard Plan No. 230

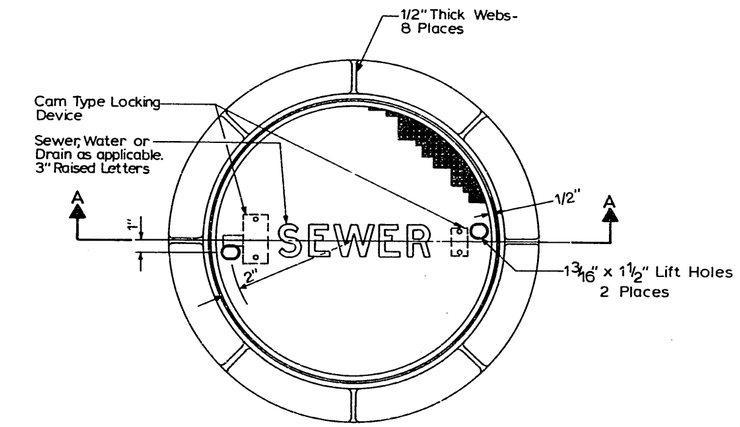

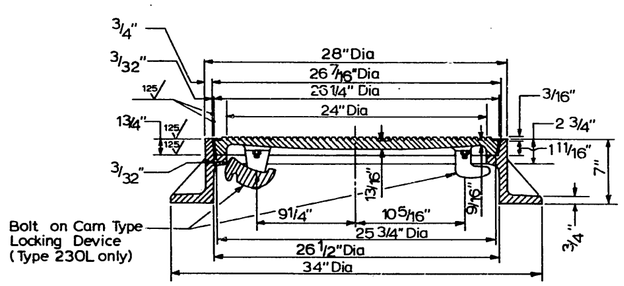

Section A-A

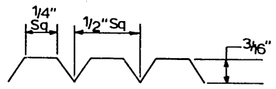

Cover
Detail Pattern

Notes:
1. Designate Locking Cover as 230L.
2. For pavement depth greater than 6" use ring extensions. See Std Plan 231.
3. Cover thickness is measured from bottom of pattern.

Ref. Std. Spec. Sec. 7-05 & 9-05.

Do Not Scale

APPROVED BY THE BOARD OF PUBLIC WORKS 10/31, 1986 CHAIRMAN ATTEST: Barbara A. Talarico EXEC SECRETARY	CITY OF SEATTLE DEPARTMENT OF ENGINEERING	24" Diameter Ring and Cover

Standard Plan No. 231

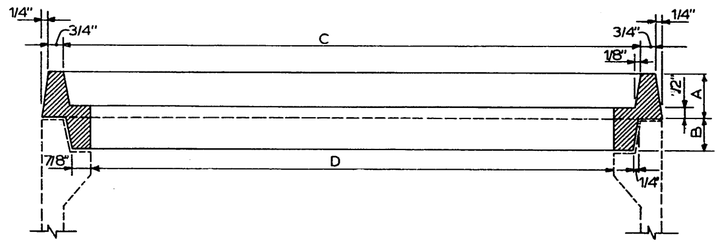

Section of Ring Extension

Notes
1. Dimension "A" refers to height of ring extension over manhole frame.
2. Dimension "B" refers to depth of ring extension seat.
3. Dimension "C" refers to the width required to fit manhole cover.
4. Dimension "D" refers to clear opening of the manhole frame.

Ref. Std. Spec. Sec. 7-20.

APPROVED BY THE BOARD OF PUBLIC WORKS 10/31, 1986 CHAIRMAN ATTEST: Barbara A. Talarico EXEC SECRETARY	CITY OF SEATTLE DEPARTMENT OF ENGINEERING	Manhole Ring Extensions

Standard Plan No. 232

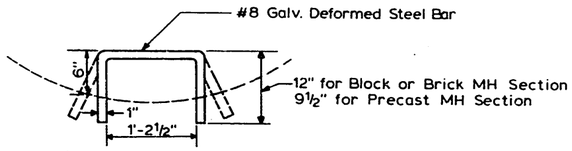

Legs may be parallel or approximately radial at option of manufacturer except that all steps in any MH shall be similar.

Step

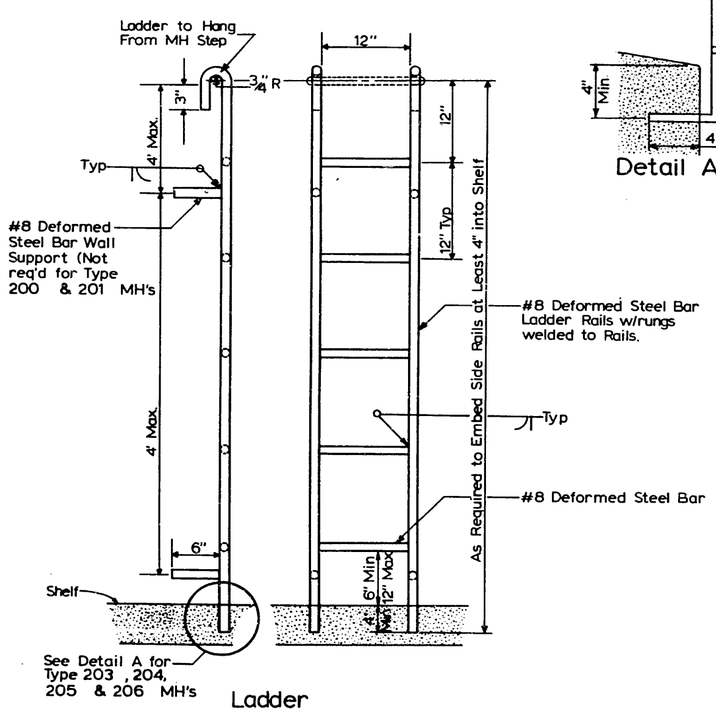

Ladder

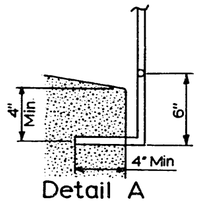

Detail A

Notes:
1. Steps and Ladder Rungs shall be #8 (1" nominal diameter) Deformed Steel Bars placed at 12" c c.
2. Steps and Prefabricated ladders shall be galvanized after fabrication.

Ref Std Spec Sec 7-05

APPROVED BY THE BOARD OF PUBLIC WORKS 10/31, 19 87 CHAIRMAN ATTEST: EXEC SECRETARY	CITY OF SEATTLE DEPARTMENT OF ENGINEERING	Manhole Ladder and Step

Standard Plan No. 233

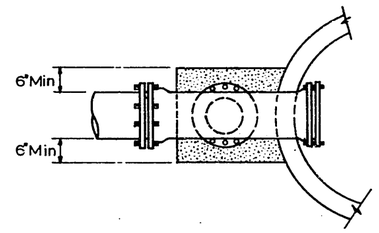

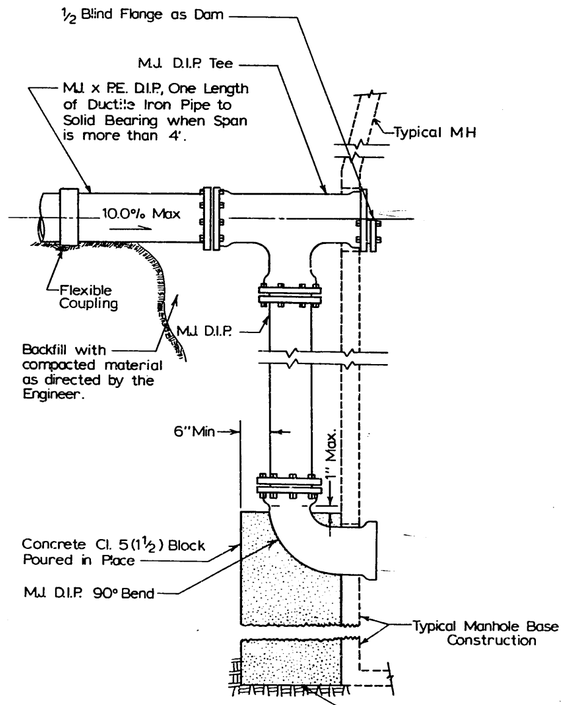

Ductile Iron Drop Connection

Notes:
1. Concrete for Drop Connection Support shall be Cl 5 (1 1/2).
2. Ductile Iron Pipe shall be ANSI/AWWA C151/A21.51 Cl. 50. Ductile Iron Fittings shall be ANSI/AWWA C111/A21.11.
3. Backfill and Compact Space Around Drop Connection with Select Material or Type 17 Mineral Aggregate.
4. Drop Connections shall be used where Drop is not more than 20'.
5. Additional Pipes may be Required for Drop Connection to Enter Manhole Structure.

Ref Std Spec Sec 7-08.

APPROVED BY THE BOARD OF PUBLIC WORKS 10/31, 19 87 CHAIRMAN ATTEST: EXEC SECRETARY	CITY OF SEATTLE DEPARTMENT OF ENGINEERING	Drop Connection

Standard Plan No. 240

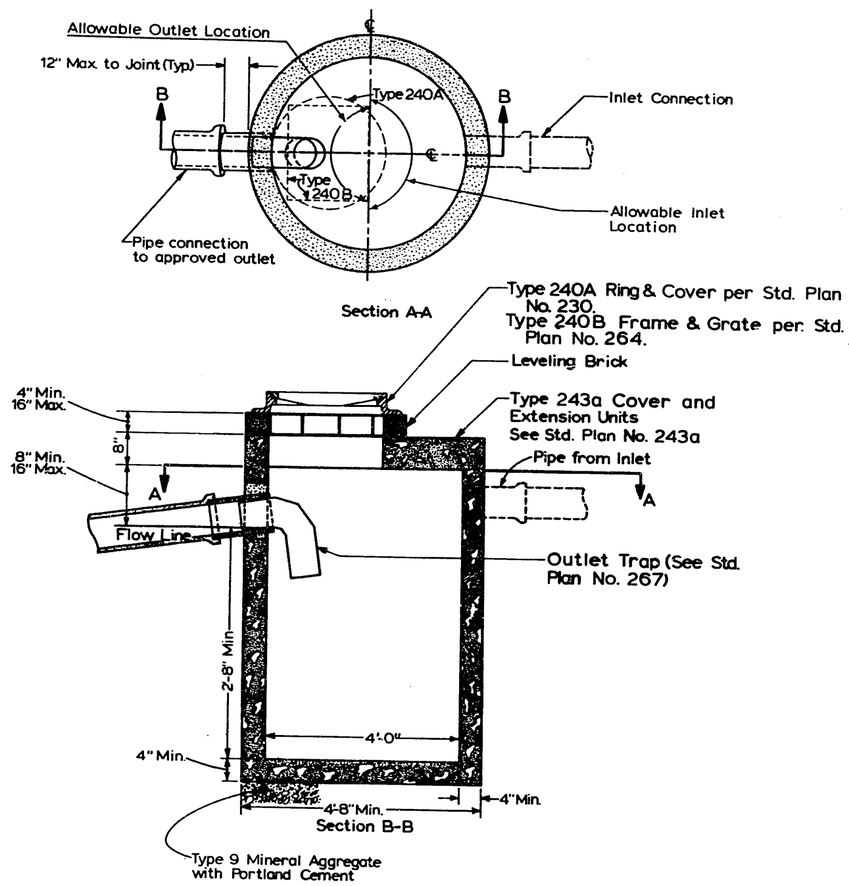

Notes:

1. Frame & Grate or Ring and Cover shall be located over Trap.
2. Invert of Inlet Pipe shall be 0.2' Min. Above Invert of Outlet Pipe.

Ref. Std. Spec. Sec. 7-05.

Do Not Scale

APPROVED BY THE BOARD OF PUBLIC WORKS 10/31 19 [signature] CHAIRMAN ATTEST: [signature] EXEC SECRETARY	CITY OF SEATTLE DEPARTMENT OF ENGINEERING	Type 240 Catch Basin

Standard Plan No. 241a

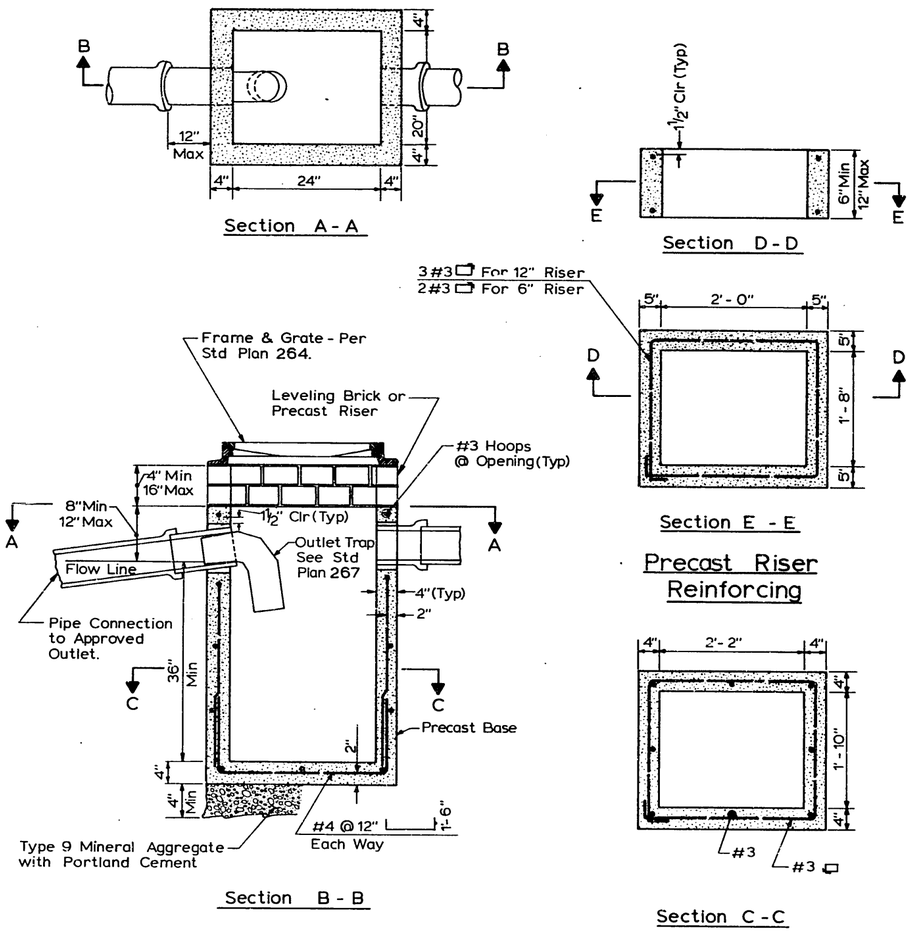

Notes:

1. For Curb Discharge Installation See Std Plan No. 241b.
2. Install Per Standard Plan No. 261.
3. Material: Concrete - f'c = 4000 psi
   Reinforcing Steel - ASTM A615 GR60

Ref. Std. Spec. Sec. 7-05.

Do Not Scale

APPROVED BY THE BOARD OF PUBLIC WORKS 10/31 19 [signature] CHAIRMAN ATTEST: [signature] EXEC SECRETARY	CITY OF SEATTLE DEPARTMENT OF ENGINEERING	Catch Basin Type 241

Standard Plan No. 241b

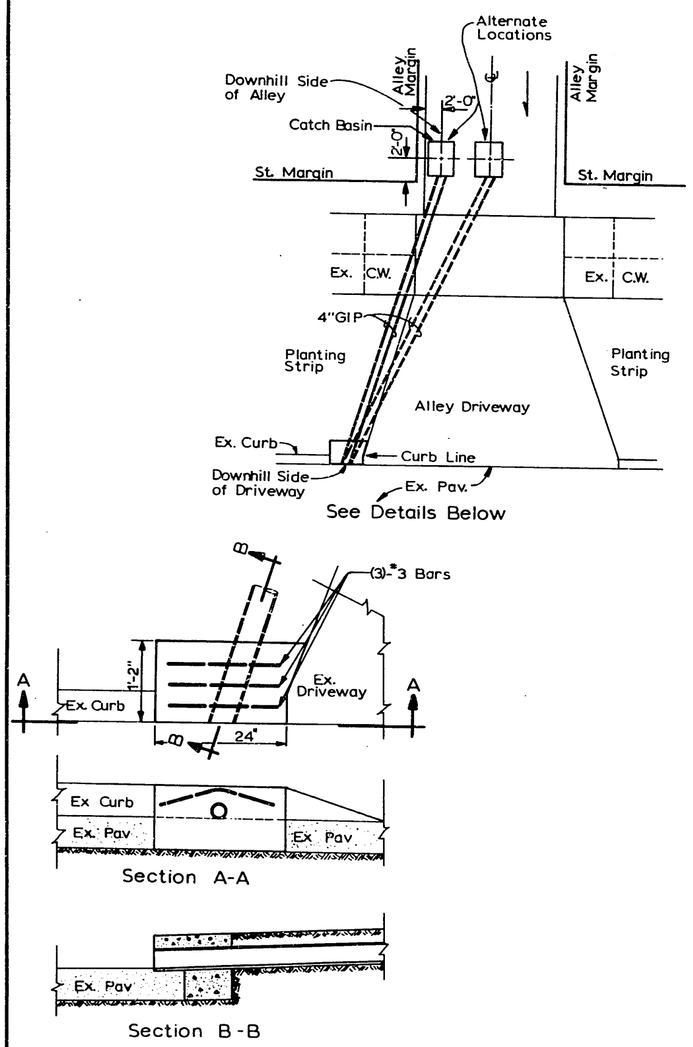

APPROVED BY THE BOARD OF PUBLIC WORKS	CITY OF SEATTLE	Type 241 Catch Basin Installations
10/31, 1986 CHAIRMAN ATTEST: EXEC SECRETARY	DEPARTMENT OF ENGINEERING	

Standard Plan No. 242

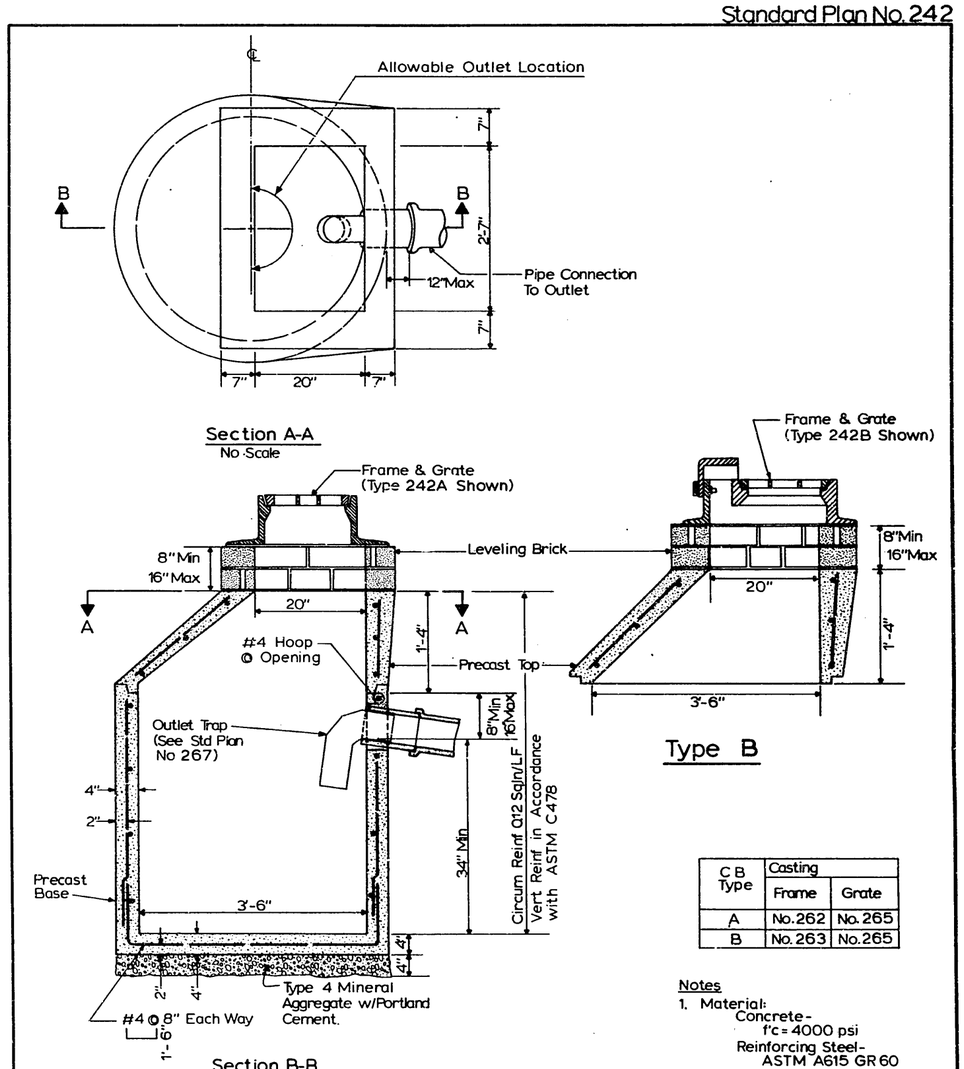

CB Type	Casting	
	Frame	Grate
A	No. 262	No. 265
B	No. 263	No. 265

Notes
1. Material:
   Concrete- f'c = 4000 psi
   Reinforcing Steel- ASTM A615 GR 60
2. Install & Locate Per Std Plans No. 260a & No. 260b & 261.

No Scale

Ref. Std. Spec. Sec. 7-05.

APPROVED BY THE BOARD OF PUBLIC WORKS	CITY OF SEATTLE	Catch Basin Type 242
10/31, 1986 CHAIRMAN ATTEST: EXEC SECRETARY	DEPARTMENT OF ENGINEERING	

Standard Plan No. 243a

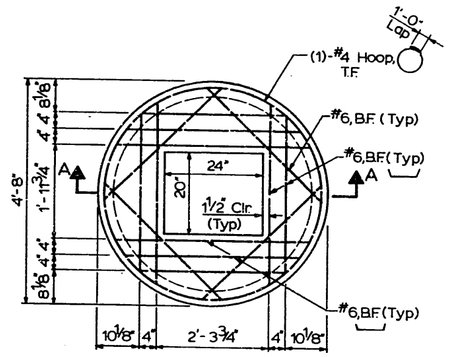

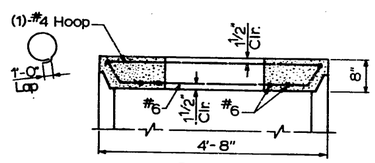

Section A-A

Unit N

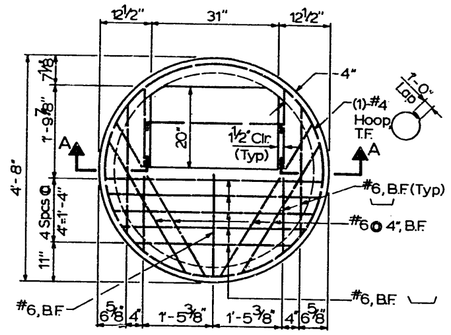

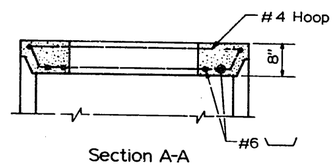

Section A-A

Unit T

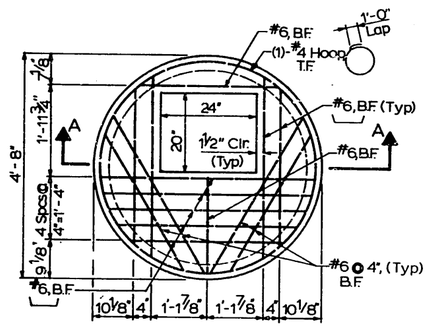

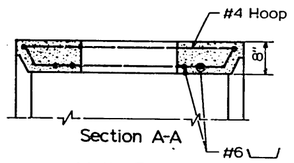

Section A-A

Unit P-48

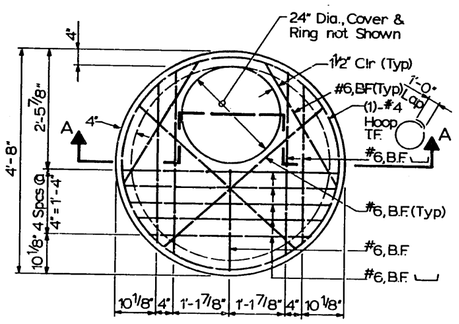

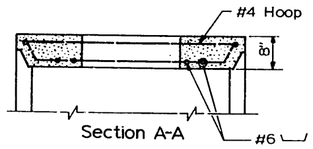

Section A-A

Unit R

Do Not Scale

APPROVED BY THE BOARD OF PUBLIC WORKS 10/31, 19 96 CHAIRMAN ATTEST: EXEC SECRETARY	CITY OF SEATTLE DEPARTMENT OF ENGINEERING	Precast Catch Basin Top Slab

Standard Plan No. 243b

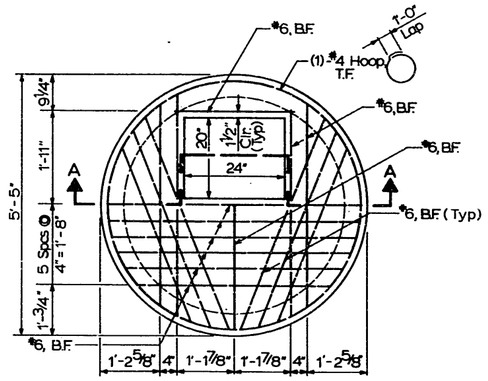

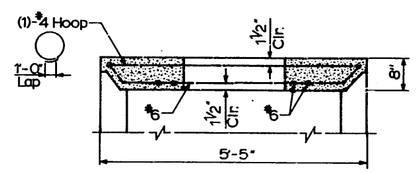

Section A-A

Unit P-54
(For Base Detail, See Std Plan No. 201b)

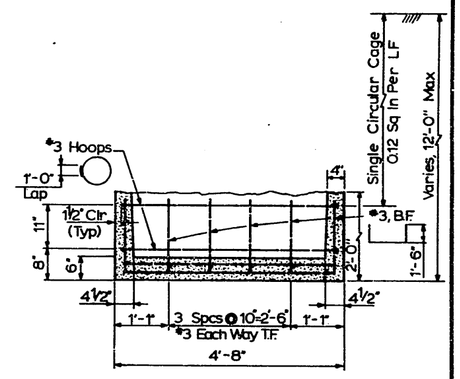

Unit M (Base for Unit P-48)
(Elevation)

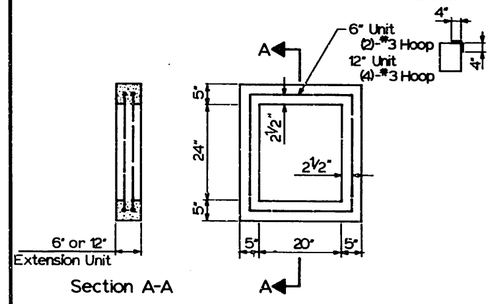

Unit S

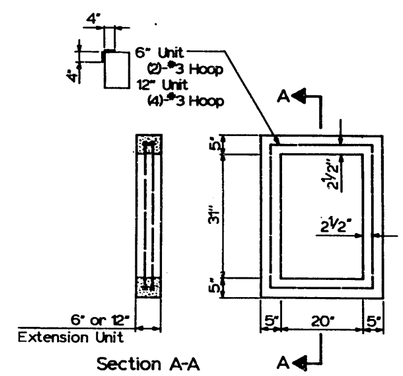

Unit U

Notes:

1. Concrete – Class AX
2. Reinforcing Steel – ASTM A615, GR. 60

Do Not Scale

APPROVED BY THE BOARD OF PUBLIC WORKS 10/31, 19 96 CHAIRMAN ATTEST: EXEC SECRETARY	CITY OF SEATTLE DEPARTMENT OF ENGINEERING	Precast Catch Basin Top & Bottom Slab & Extension Units

Standard Plan No. 250

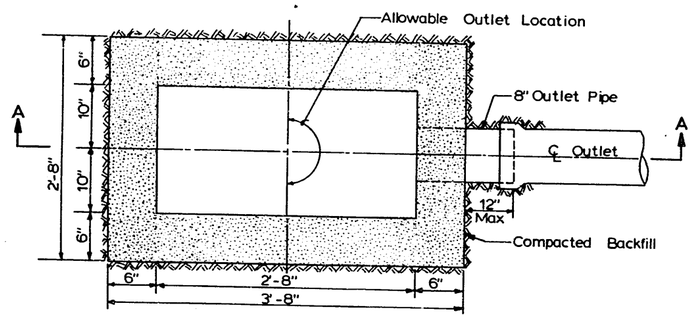

Section B-B

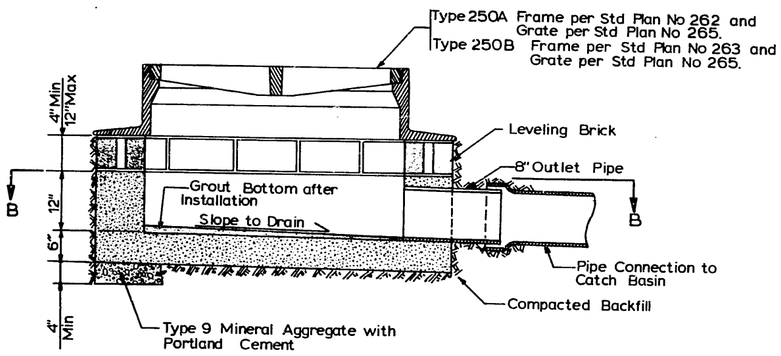

Section A-A

Install and locate per Std Plan. No 260a and 260b.

Ref. Std. Spec. Sec. 7-05.

Do Not Scale

APPROVED BY THE BOARD OF PUBLIC WORKS 10/21 1982 CHAIRMAN ATTEST: EXEC SECRETARY	CITY OF SEATTLE DEPARTMENT OF ENGINEERING	Type 250 Inlet

Standard Plan No. 252

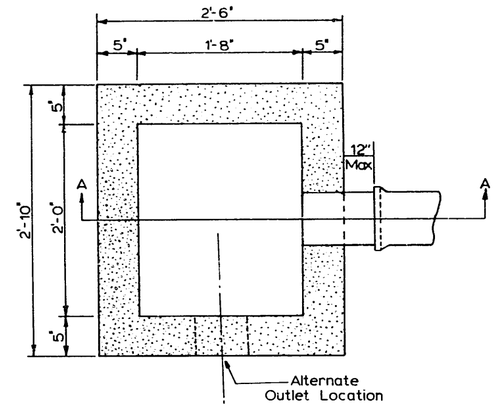

Plan

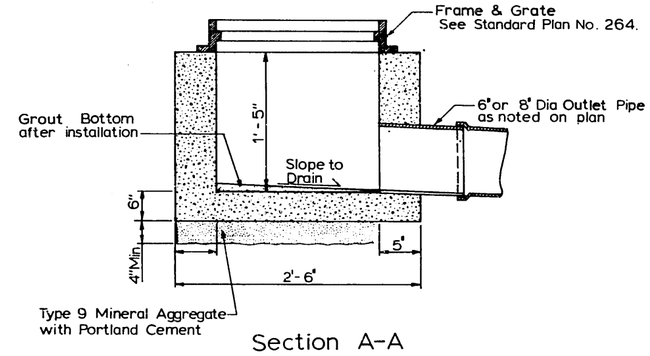

Section A-A

Ref. Std. Spec. Sec. 7-05

Do Not Scale

APPROVED BY THE BOARD OF PUBLIC WORKS 10/21 1982 CHAIRMAN ATTEST: EXEC SECRETARY	CITY OF SEATTLE DEPARTMENT OF ENGINEERING	Type 252 Inlet

Standard Plan No. 260a

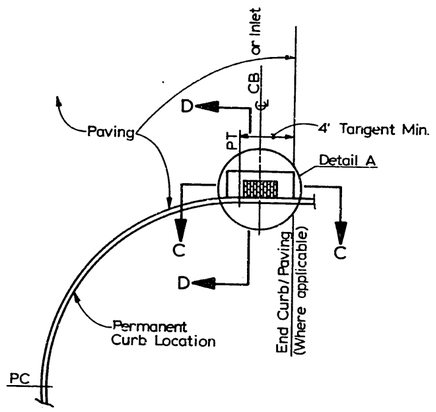

CB/Inlet Location at Curb Returns
No Scale

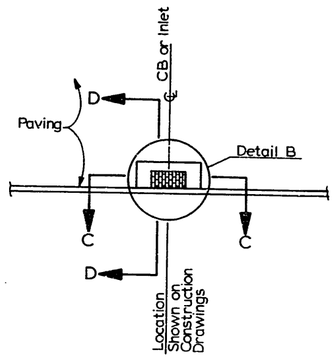

CB/Inlet Location Not at Curb Returns
No Scale

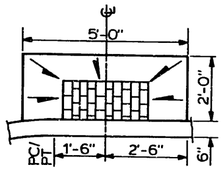

Detail A
No Scale

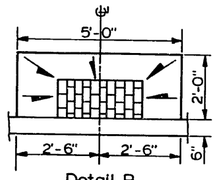

Detail B
No Scale

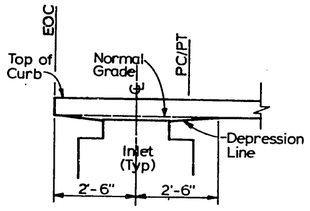

Section C-C
No Scale

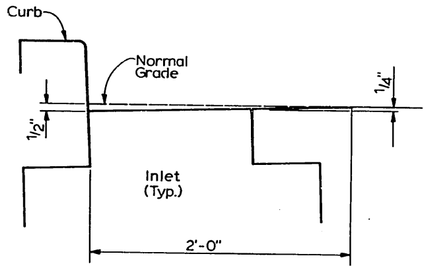

Section D-D
No Scale

APPROVED BY THE BOARD OF PUBLIC WORKS 10/31, 1986 CHAIRMAN ATTEST: EXEC SECRETARY	CITY OF SEATTLE DEPARTMENT OF ENGINEERING	Inlet / CB Location and Installation

Standard Plan No. 260b

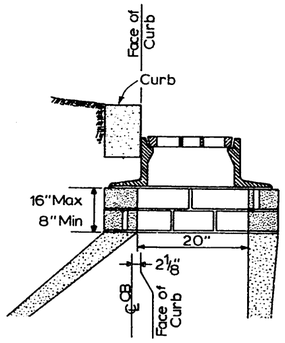

Type 242A CB
(Type 250 Inlet Similar)

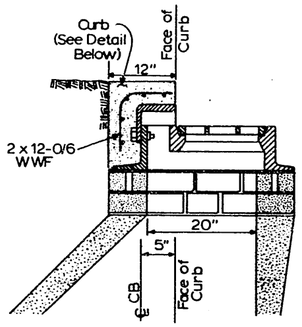

Type 242B CB
(Type 250 Inlet Similar)

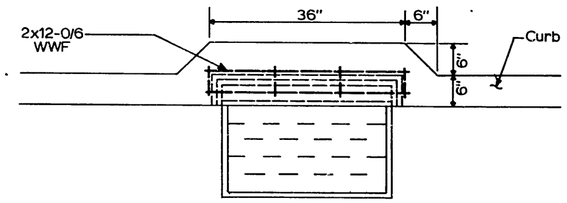

Curb Detail (Plan View) For
Type 242B CB & Type 250A Inlet.

Ref. Std. Spec. Sec. 7-05.

APPROVED BY THE BOARD OF PUBLIC WORKS 10/31, 1986 CHAIRMAN ATTEST: EXEC SECRETARY	CITY OF SEATTLE DEPARTMENT OF ENGINEERING	Catch Basin And Inlet Installation

Standard Plan No. 261

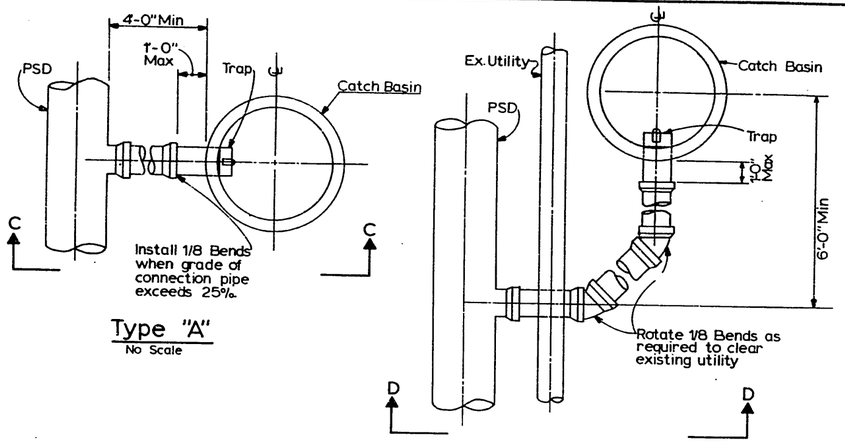

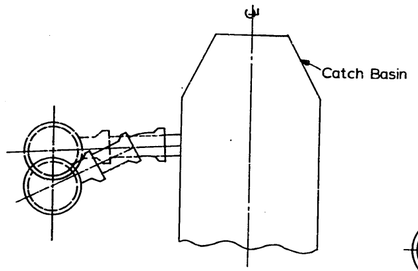

Section "C-C"
No Scale

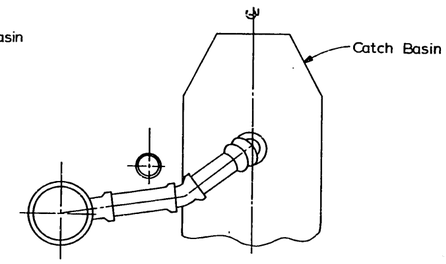

Section "D-D"
No Scale

Notes:

1. Connections shall maintain a minimum of 2% and a maximum of 50% grade.
2. Type "A" Connection may be used under the following circumstances:
   A. The maximum of 50% grade is not exceeded.
   B. There is no interference with existing or proposed utilities.

APPROVED BY THE BOARD OF PUBLIC WORKS 10/2/19 CHAIRMAN ATTEST: EXEC SECRETARY	CITY OF SEATTLE DEPARTMENT OF ENGINEERING	Typical Catch Basin Connection

Standard Plan No. 262

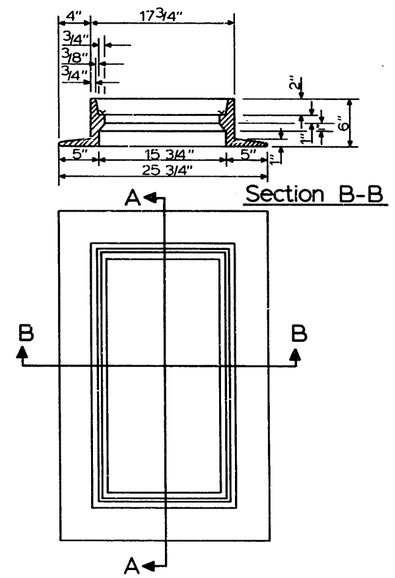

Section B-B

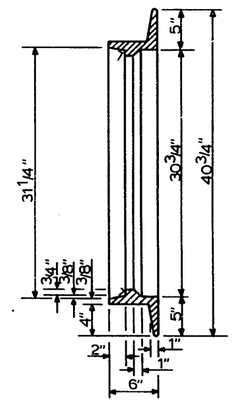

Section A-A

Not to Scale

Ref. Std. Spec. Sec. 9-05.

APPROVED BY THE BOARD OF PUBLIC WORKS 10/2/19 CHAIRMAN ATTEST: EXEC SECRETARY	CITY OF SEATTLE DEPARTMENT OF ENGINEERING	Inlet Frame Type 262

Standard Plan No. 263

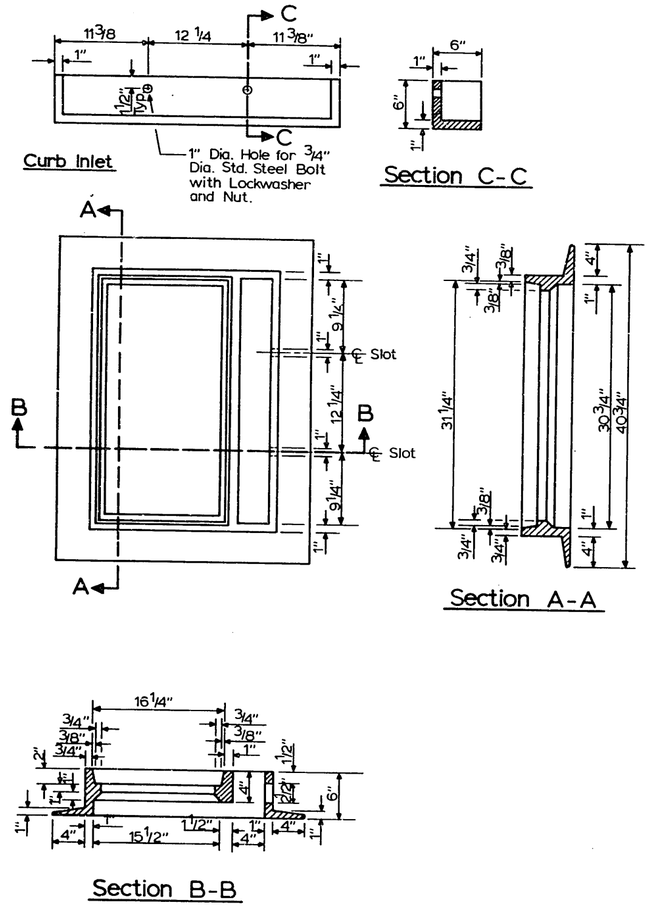

Not to Scale

Ref. Std. Spec. Sec. 9-05.

APPROVED BY THE BOARD OF PUBLIC WORKS 12/21, 19 [illegible] CHAIRMAN ATTEST: [illegible] EXEC SECRETARY	CITY OF SEATTLE DEPARTMENT OF ENGINEERING	Type 263 Frame

Standard Plan No. 264

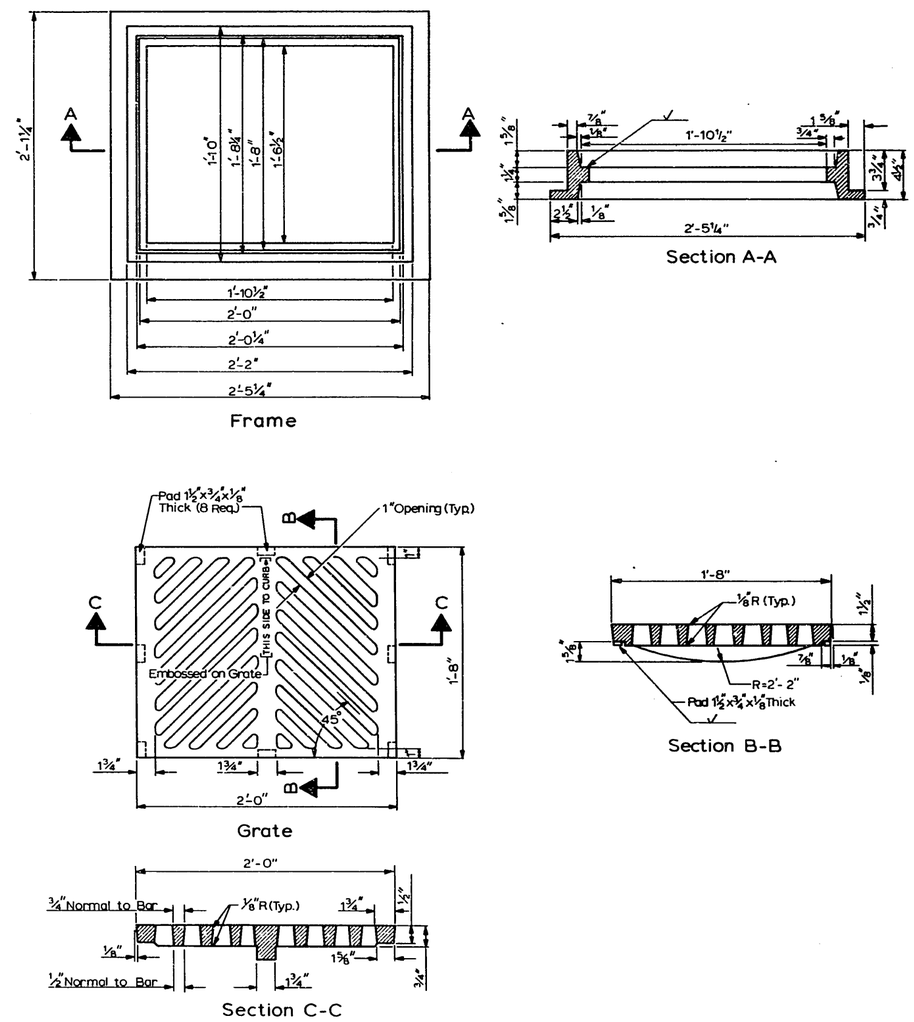

Grate Material: Ductile Iron Ref. Std. Spec. Sec. 7-05, 9-05.

Do Not Scale

APPROVED BY THE BOARD OF PUBLIC WORKS 10/21, 19 [illegible] CHAIRMAN ATTEST: [illegible] EXEC SECRETARY	CITY OF SEATTLE DEPARTMENT OF ENGINEERING	Inlet Frame & Grate

Standard Plan No. 265

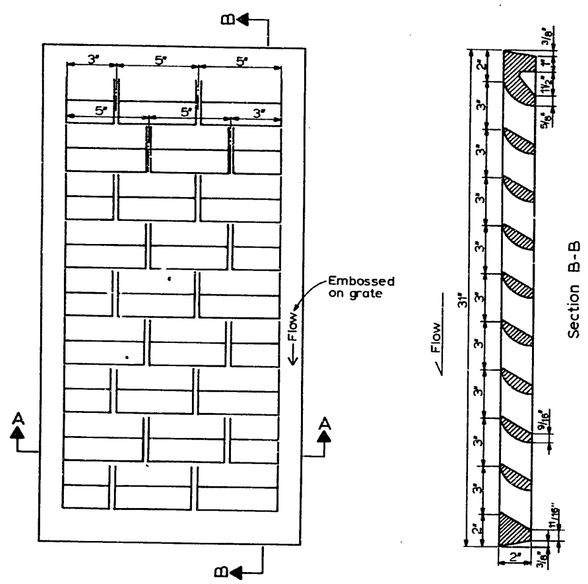

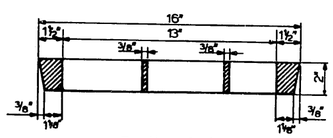

Section A-A

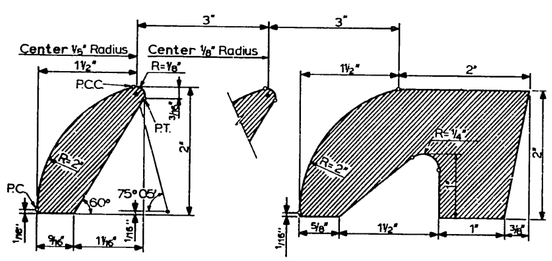

Vane Detail

End Detail

Grate Material: Ductile Iron Ref. Std. Spec. Sec. 7-05, 9-05. Do Not Scale

APPROVED BY THE BOARD OF PUBLIC WORKS 10/21, 19 82 CHAIRMAN ATTEST: EXEC SECRETARY	CITY OF SEATTLE DEPARTMENT OF ENGINEERING	Vaned Grate

Standard Plan No 266

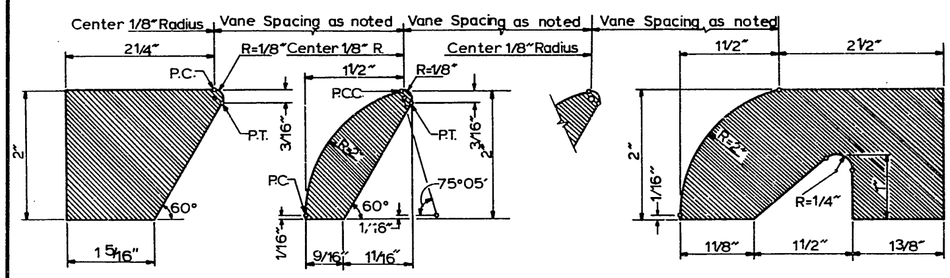

End Detail Typical Vane End Detail

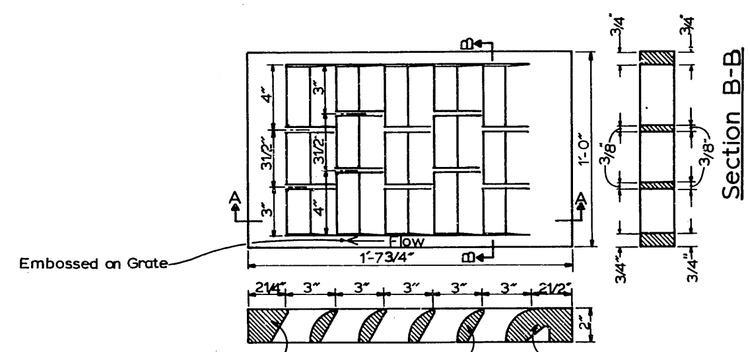

Section A-A

Grate Material: Ductile Iron Ref. Std. Spec. Sec. 9-05. DO NOT SCALE

APPROVED BY THE BOARD OF PUBLIC WORKS 10/21, 19 82 CHAIRMAN ATTEST: EXEC SECRETARY	CITY OF SEATTLE DEPARTMENT OF ENGINEERING	Vaned Grate

Standard Plan No. 267a

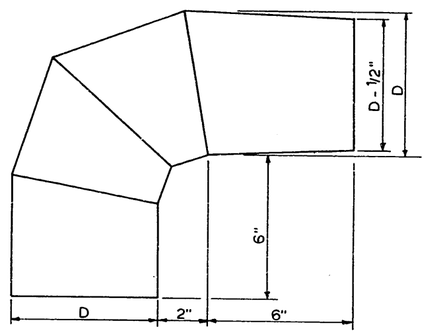

Type A For use with Outlet Pipe which Slopes 10% or Less

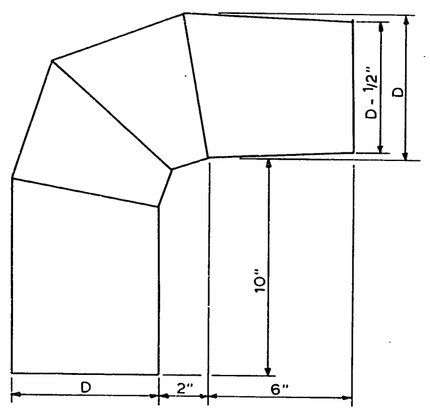

Type B For use with Outlet Pipe which Slopes More than 10%

Notes
1. Trap to be made of 22 Ga Galvanized Sheet Metal.
2. All Joints to be Seamed and Soldered.
3. All Longitudinal Joints to be Rivited.
4. Dimension "D" is nominal diameter of Outlet Pipe.

APPROVED BY THE BOARD OF PUBLIC WORKS 10/31, 19 86 CHAIRMAN ATTEST: EXEC SECRETARY	CITY OF SEATTLE DEPARTMENT OF ENGINEERING	Outlet Trap

Standard Plan No. 267b

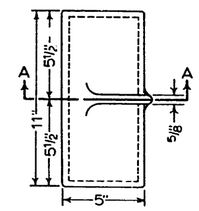

Plan
Type C Trap

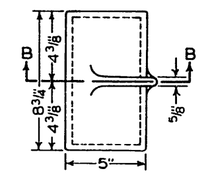

Plan
Type D Trap

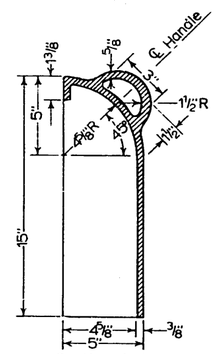

Section A-A

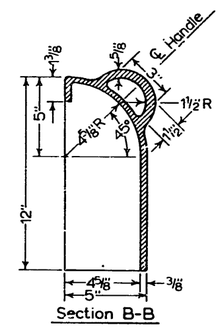

Section B-B

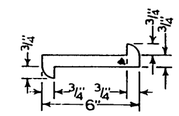

Trap Hook
Trap Hooks may be round or square in cross-section.

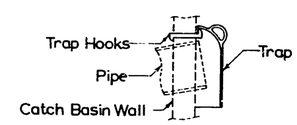

Trap Installation

Type 267C Trap to be used with 8"I.D. Outlet Pipe.

Type 267D Trap to be used with 4"or 6"I.D. Outlet Pipe.

Trap may be Cast Iron ASTM Designation A48 Class 25 or Cast Steel ASTM Designation A27 Grade 70-36.

Trap and trap hook to have a bituminous coating according to Std. Specs. Sec. 9-05.15(1)

Do Not Scale

APPROVED BY THE BOARD OF PUBLIC WORKS 10/31, 19 86 CHAIRMAN ATTEST: EXEC SECRETARY	CITY OF SEATTLE DEPARTMENT OF ENGINEERING	Outlet Trap (For Park Dept Use Only)

Standard Plan No. 268

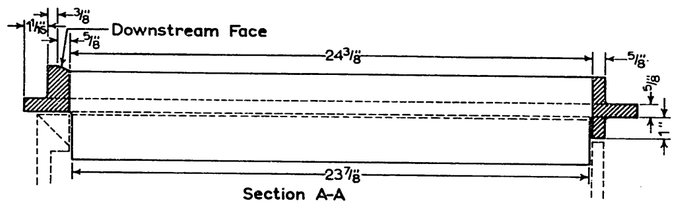

Section A-A

These Dimensions may be changed if necessary to fit Existing Castings.....

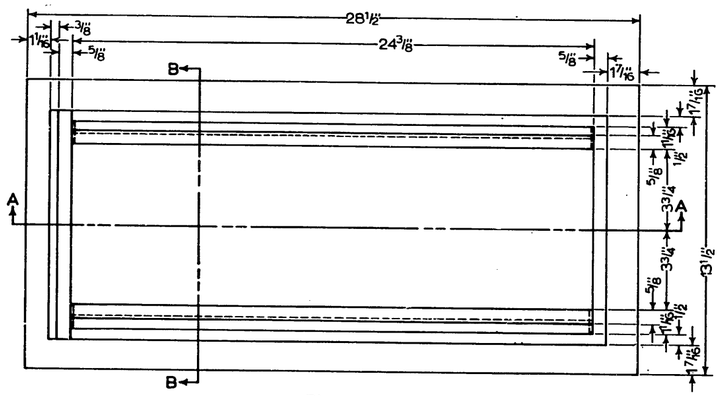

Plan

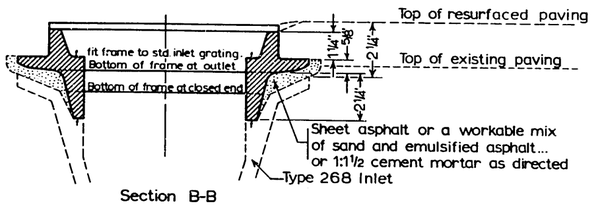

Section B-B

Ref. Std. Spec. Sec. 9-05.

Do Not Scale

APPROVED BY THE BOARD OF PUBLIC WORKS 10/31, 19 82 CHAIRMAN ATTEST: EXEC SECRETARY	CITY OF SEATTLE DEPARTMENT OF ENGINEERING	Extension for Inlet

Standard Plan No. 270a

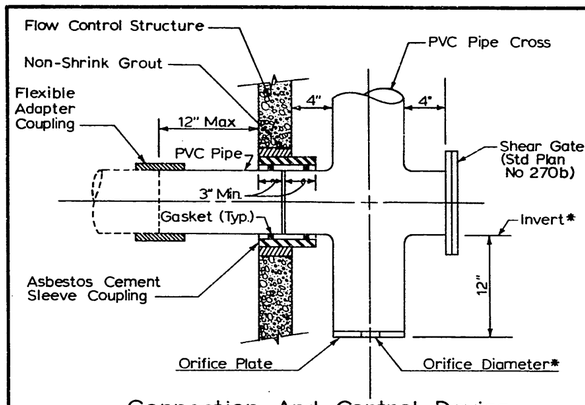

Connection And Control Device
Detail A

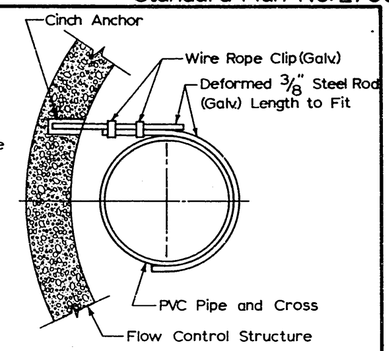

Pipe Support
Detail B

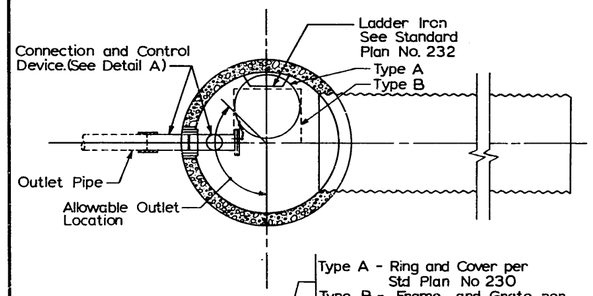

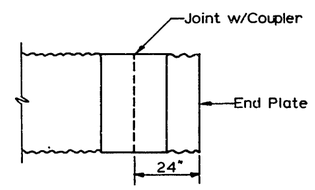

End Cap Detail
(When Required)

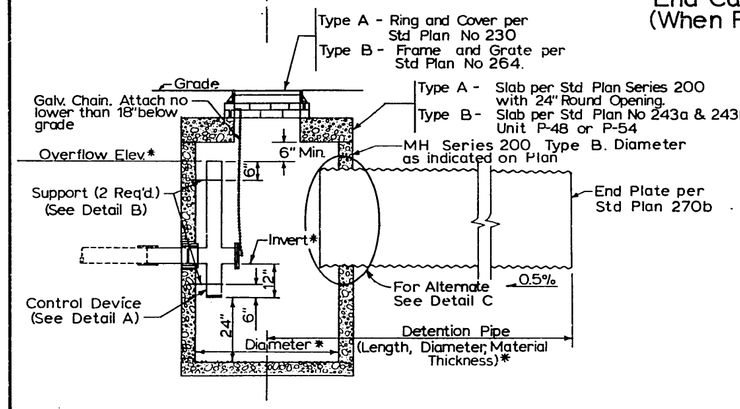

Flow Control Structure and Detention Pipe

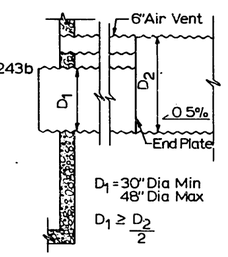

This configuration may be used for Dentention Pipes larger than 36" Dia. Use configuration shown on construction drawing profile.

Detail C

Note: *Means Specific Design Information as Indicated on Construction Drawings.

Do Not Scale

APPROVED BY THE BOARD OF PUBLIC WORKS 10/31, 19 82 CHAIRMAN ATTEST: EXEC SECRETARY	CITY OF SEATTLE DEPARTMENT OF ENGINEERING	Flow Control Structure

Standard Plan No. 270b

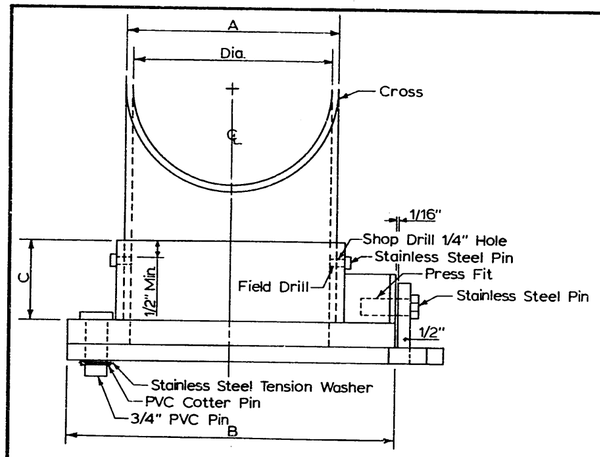

Top View

Dia.	A	B*	C*
4"	4 1/2"	8"	2"
6"	6 5/8"	10"	2 1/2"
8"	8 5/8"	12"	3"
10"	10 3/4"	14"	3"
12"	12 3/4"	16"	3"

*Minimum

Note: Dia=Outlet Pipe Diameter.

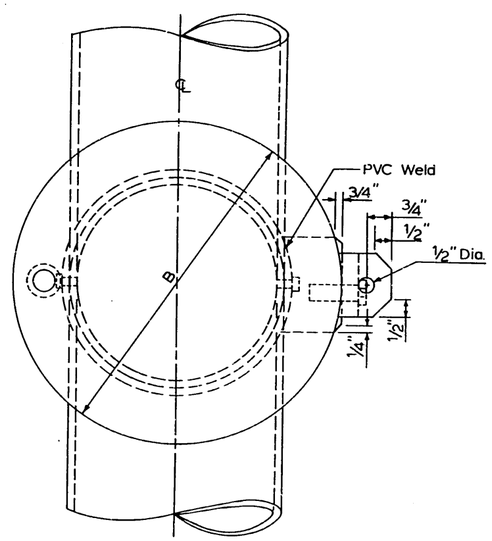

Front View

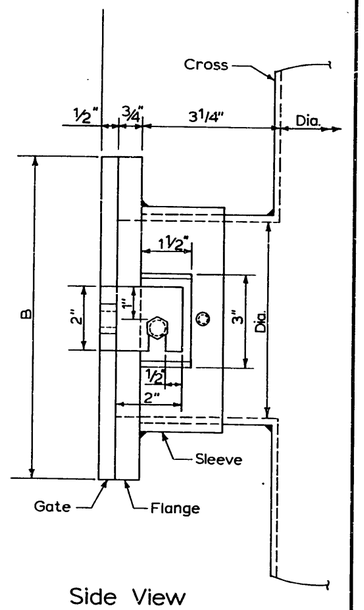

Side View

APPROVED BY THE BOARD OF PUBLIC WORKS 10/31, 1986 CHAIRMAN ATTEST: EXEC SECRETARY	CITY OF SEATTLE DEPARTMENT OF ENGINEERING	PVC Shear Gate

Standard Plan No. 271a

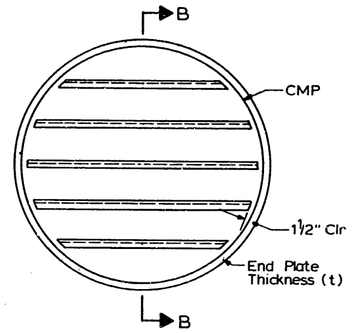

Section A-A

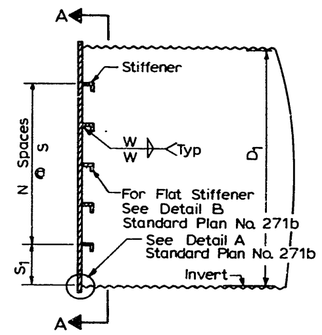

Section B-B

Type A

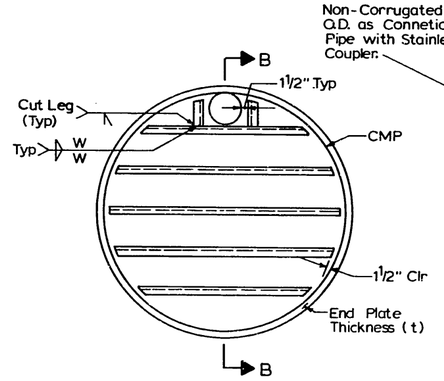

Section A-A

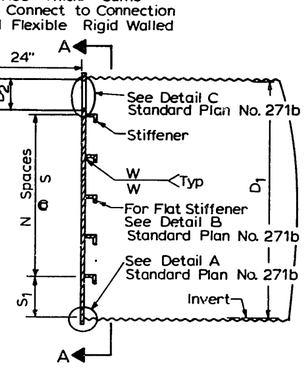

Section B-B

Type B

Note: For D_1, D_2, t, S, S_1, N & W Values and general Notes see Standard Plan No. 271c

Do Not Scale

APPROVED BY THE BOARD OF PUBLIC WORKS 10/31, 1986 CHAIRMAN ATTEST: EXEC SECRETARY	CITY OF SEATTLE DEPARTMENT OF ENGINEERING	Detention Structure End Plate Details

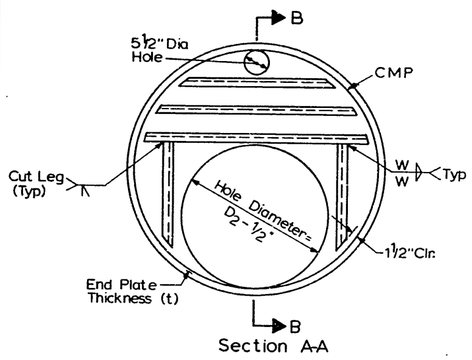

Section A-A

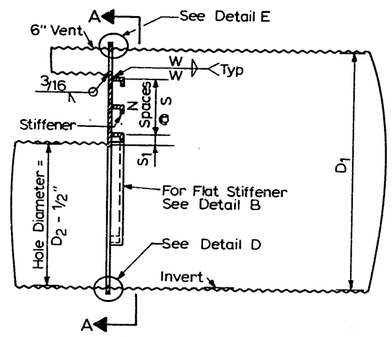

Section B-B

Note: For D_1, D_2, t, S, S_1, N & W Values and general Notes see Standard Plan No. 271c.

Type C

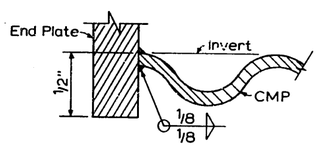

Detail A

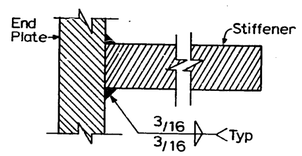

Detail B - Flat Stiffener

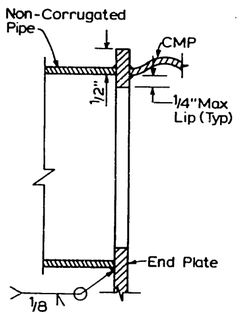

Detail C

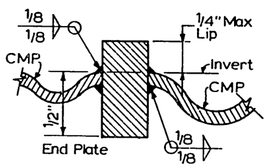

Detail D

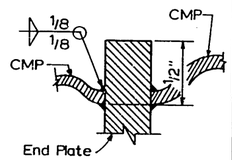

Detail E

Do Not Scale

APPROVED BY THE BOARD OF PUBLIC WORKS 10/31, 19 86 CHAIRMAN ATTEST: EXEC. SECRETARY	CITY OF SEATTLE DEPARTMENT OF ENGINEERING	Detention Structure End Plate Details

Pipe Diameter D_1	Pipe Diameter D_2	End Plate Thickness t	Stiffener Type & Size	Stiffener Spacing S_1	Stiffener Spacing S	Stiffener Spacing N	Size W
Type A							
30"	—	1/4"	Flat 2 1/2" x 1/4"	6"	6"	3	3/16"
36"	—	1/4"	Flat 3" x 1/4"	6"	6"	4	3/16"
48"	—	1/4"	Flat 4 1/4" x 1/4"	8"	8"	4	3/16"
60"	—	3/8"	L 2 1/2" x 2" x 3/8	10"	10"	4	1/4"
72"	—	3/8"	L 3" x 3" x 3/8"	6"	10"	6	1/4"
Type B							
30"	6"	1/4"	Flat 2 1/2" x 1/4"	5 1/2"	5 1/2"	3	3/16"
	8"			5"	5"	3	
	12"			4"	6"	2	
36"	6"	1/4"	Flat 3" x 1/4"	6"	5 1/2"	4	3/16"
	8"			6"	5"	4	
	12"			5 1/2"	5 1/2"	3	
48"	6"	1/4"	Flat 4 1/4" x 1/4"	8"	8"	4	3/16"
	8"			6"	8"	4	
	12"			4"	7 1/2"	4	
60"	6"	3/8"	L 2 1/2" x 2" x 3/8"	7"	9"	5	1/4"
	8"			10"	10"	4	
	12"			6"	10"	4	
72"	6"	3/8"	L 3" x 3" x 3/8"	8"	8"	7	1/4"
	8"			8"	9"	6	
	12"			8"	10"	5	
Type C							
48"	30"	1/4"	Flat 4 1/4" x 1/4"	2"	8"	1	3/16"
60"	36"	3/8"	L 2 1/2" x 2" x 3/8"	2"	7"	2	1/4"
72"	36"	3/8"	L 2" x 3" x 3/8"	3"	8 1/2"	3	1/4"

Notes:

1. Designs valid for pipes installed with 6 ft. or less of cover from crown of pipe to grade. Maximum water surcharge 3 ft. above crown of pipe.
2. End Plate Material - Aluminum 6061-T6.
3. Designs shall be used only for Aluminum CMP.

APPROVED BY THE BOARD OF PUBLIC WORKS 10/31, 19 86 CHAIRMAN ATTEST: EXEC SECRETARY	CITY OF SEATTLE DEPARTMENT OF ENGINEERING	Detention Structure End Plate Details

Standard Plan No. 279

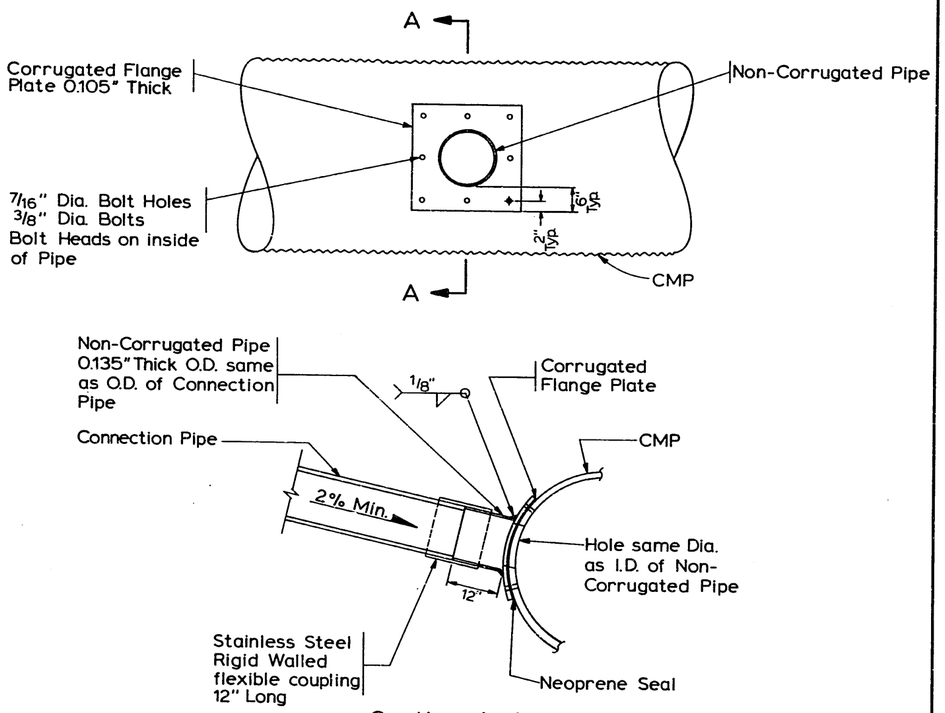

Section A-A

Notes:
1. Corrugated Flange Plate and Non-Corrugated Pipe to be same material, and have same coating as CMP.
2. Bolts to be Galv. Steel meeting ASTM A-307 or Stainless Steel meeting ASTM A-193.

APPROVED BY THE BOARD OF PUBLIC WORKS 10/31, 19 86 CHAIRMAN ATTEST: EXEC SECRETARY	CITY OF SEATTLE DEPARTMENT OF ENGINEERING	Tee Installation Corrugated Metal Pipe

Standard Plan No.280

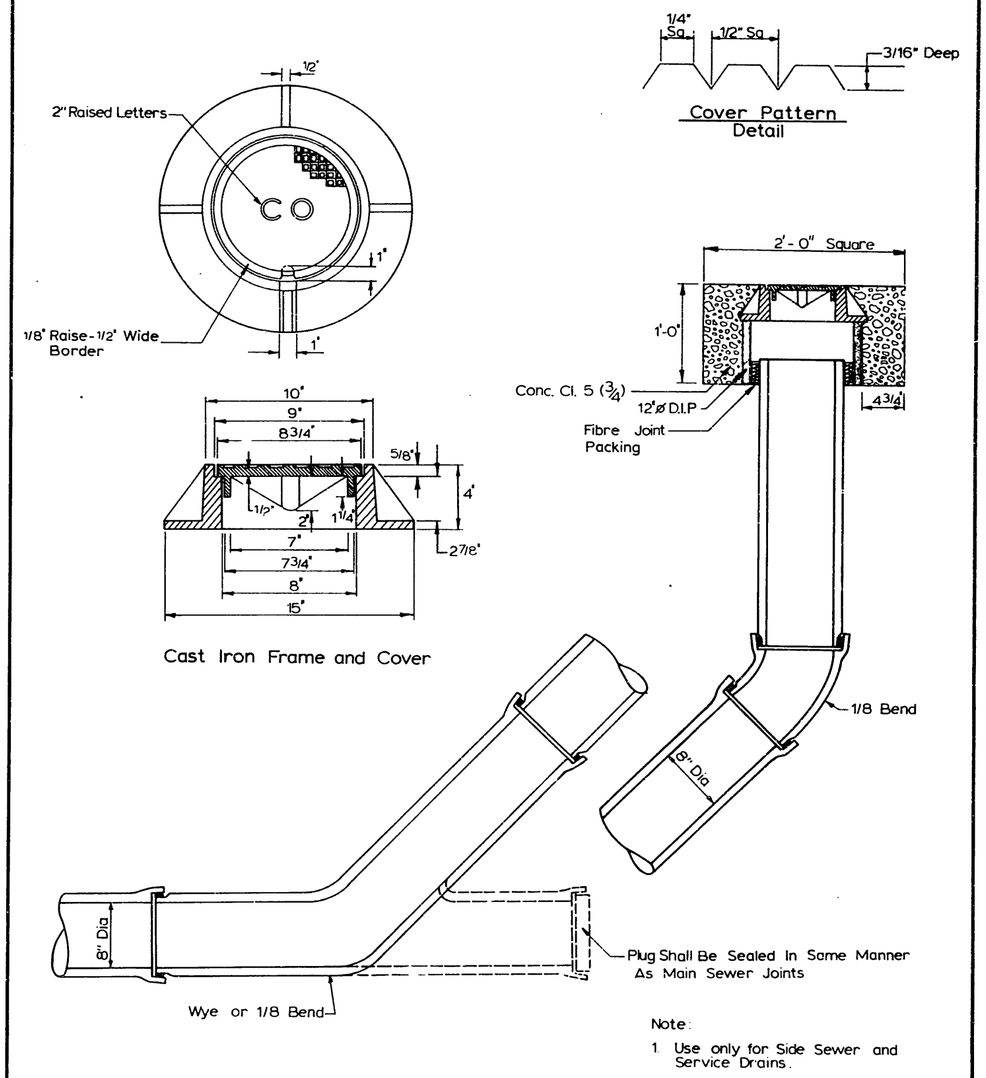

Note:
1. Use only for Side Sewer and Service Drains.

Ref. Std. Spec. Sec. 7-19

Do Not Scale

APPROVED BY THE BOARD OF PUBLIC WORKS 10/31, 19 86 CHAIRMAN ATTEST: EXEC SECRETARY	CITY OF SEATTLE DEPARTMENT OF ENGINEERING	8" Clean-out

Standard Plan No. 281

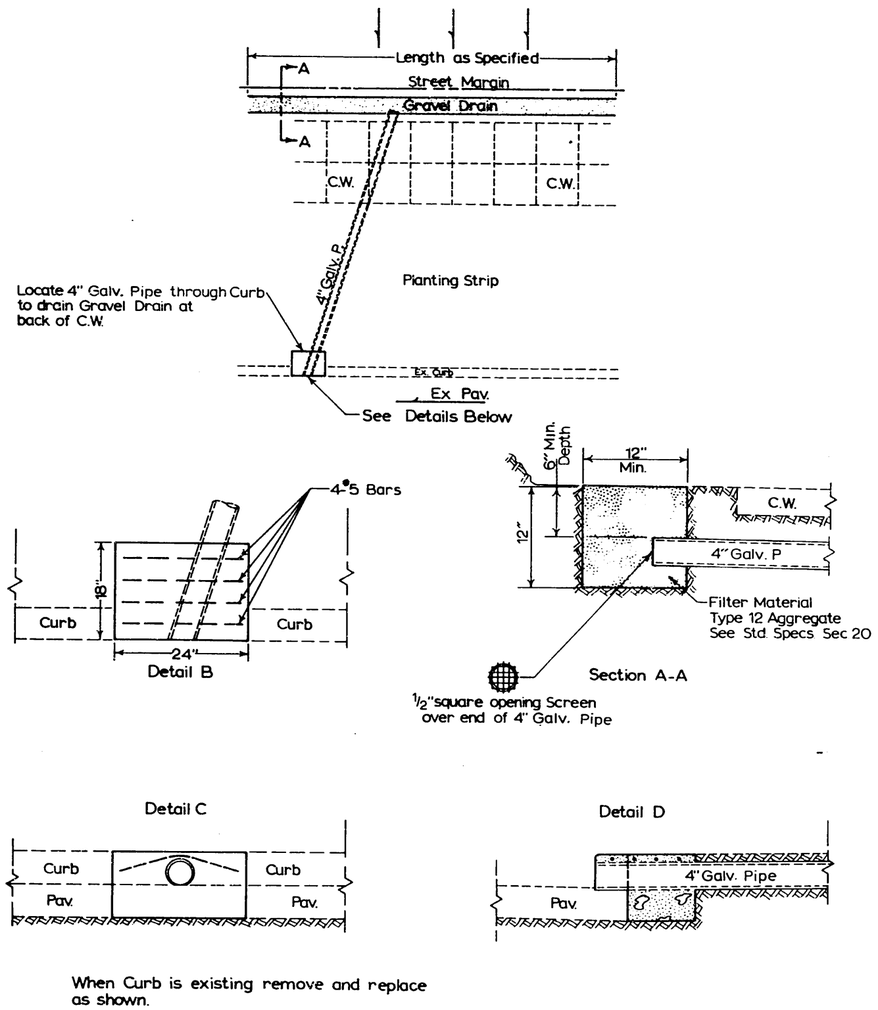

When Curb is existing remove and replace as shown.

Ref. Std. Spec. Sec. 7-01

Do Not Scale

APPROVED BY THE BOARD OF PUBLIC WORKS 10/31 1956 CHAIRMAN ATTEST: EXEC SECRETARY	CITY OF SEATTLE DEPARTMENT OF ENGINEERING	Sidewalk Drain

Standard Plan No. 282a

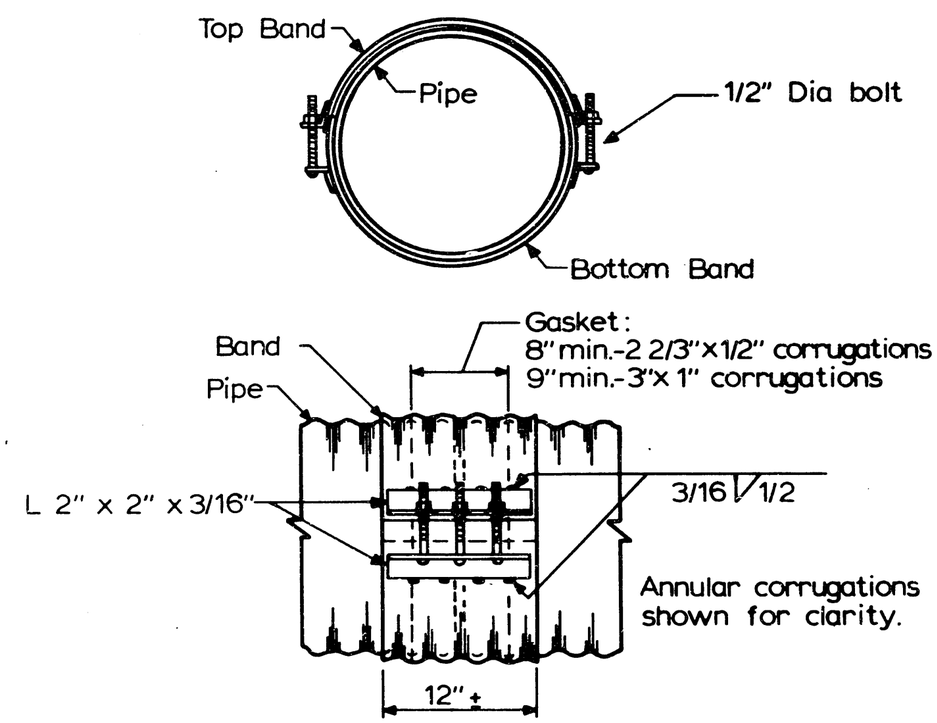

(Helical or Annular)

For Pipes Less Than 48" Diameter

Do Not Scale

APPROVED BY THE BOARD OF PUBLIC WORKS 8/31 1956 CHAIRMAN ATTEST: SECRETARY	CITY OF SEATTLE DEPARTMENT OF ENGINEERING	Corrugated Metal Pipe Coupling Bands

Standard Plan No. 282b

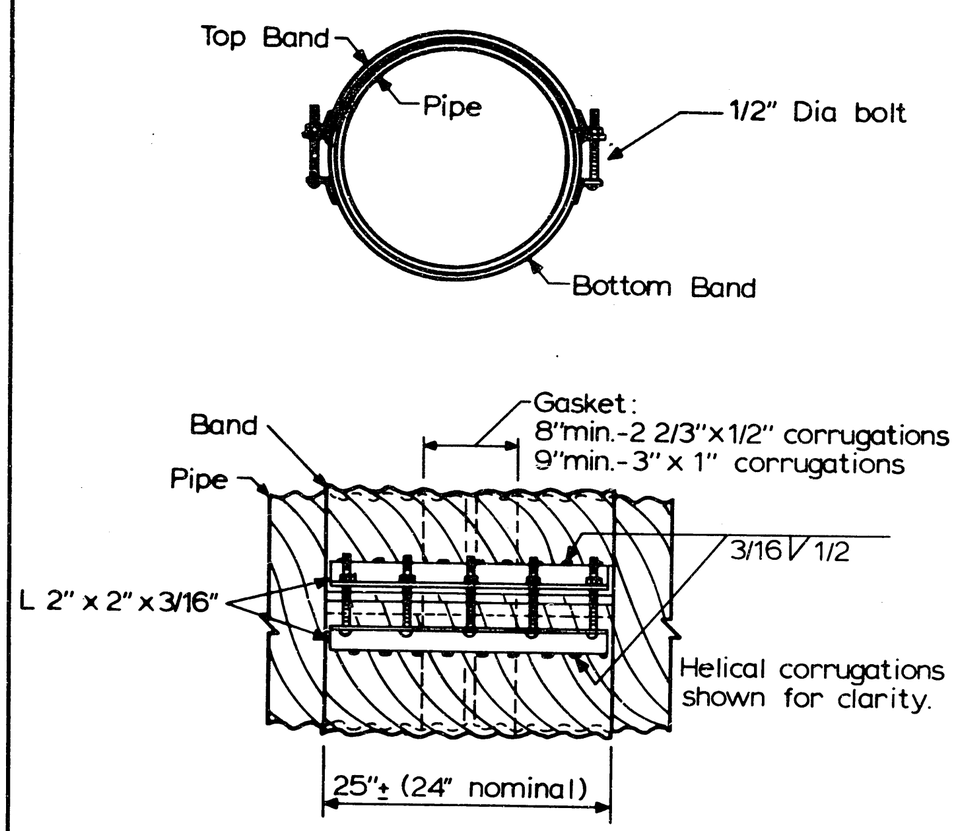

(Helical or Annular)

For Pipes 48" Diameter and Larger

Do Not Scale

APPROVED BY THE BOARD OF PUBLIC WORKS 10/31, 19 CHAIRMAN ATTEST: SECRETARY	CITY OF SEATTLE DEPARTMENT OF ENGINEERING	Corrugated Metal Pipe Coupling Bands

Standard Plan No. 283

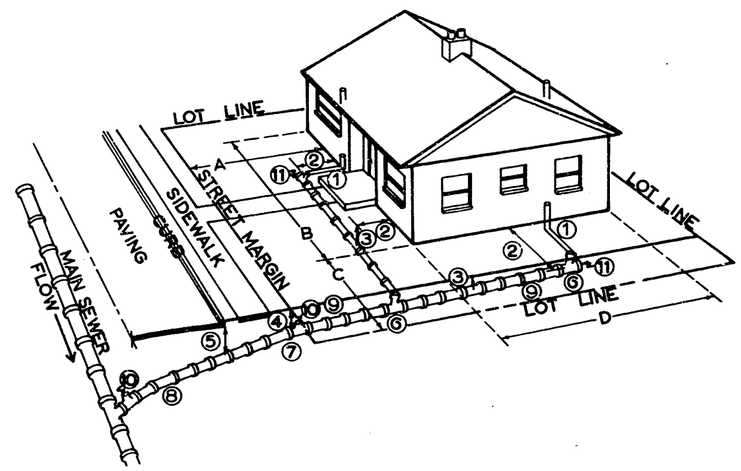

Complete legal description of property and dimensions A, B, C, and D that show the size and location of the house are mandatory for issuance of permit.

1. All house plumbing outlets must be connected to the sewer. No downspouts or storm drainage may be connected, except to a separate storm drainage system.
2. **30" min. distance from house,** except for soil pipe connection.
3. **18" min. coverage of pipe.**
4. **30" min coverage at property line.**
5. **60" min coverage at curb line.**
6. Lay pipe in straight line between bends. Make all changes in grade or line with 1/8 bend or wye. 90° change with wye and 1/8 bend.
7. Standard 4" to 6" increaser.
8. **6" sewer pipe--min. size in street, and elsewhere as directed.** 2% min. grade, 50% max.
9. 4" sewer pipe--min size on property. 2% min. grade, 100% (45°) max.
10. Test "T" with plug.
11. Removable plug.
12. Construction in Street must be done by a registered sewer contractor.
13. All construction shall be in accordance with current side sewer ordinances.
14. All construction requires a permit and payment of fee. Complete legal description of property and dimensions A, B, C and D that show the size and location of the house are required for issuance of the permit.

Ref. Std. Spec. Sec. 7-18.

Do Not Scale

APPROVED BY THE BOARD OF PUBLIC WORKS 10/31, 19 CHAIRMAN ATTEST: EXEC SECRETARY	CITY OF SEATTLE DEPARTMENT OF ENGINEERING	Side Sewer Installation

Standard Plan No. 284

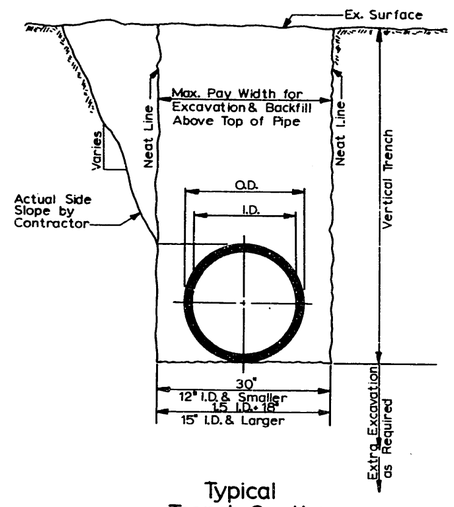

Typical
Trench Section
(Watermain)

Ref. Std. Spec. Sec. 7-10.

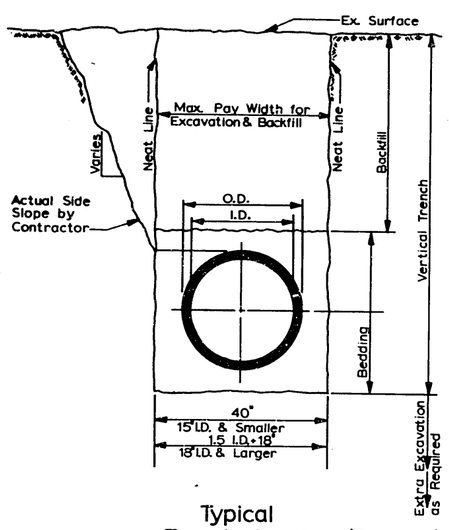

Typical
Trench Section (Sewer)
Ref. Std. Spec. Sec. 7-17.

Note: For Pavement Removal and Restoration, See Std. Plan 404a.

APPROVED BY THE BOARD OF PUBLIC WORKS. 10/31, 1986 CHAIRMAN ATTEST: EXEC SECRETARY	CITY OF SEATTLE DEPARTMENT OF ENGINEERING	Typical Trench Section

Standard Plan No. 285

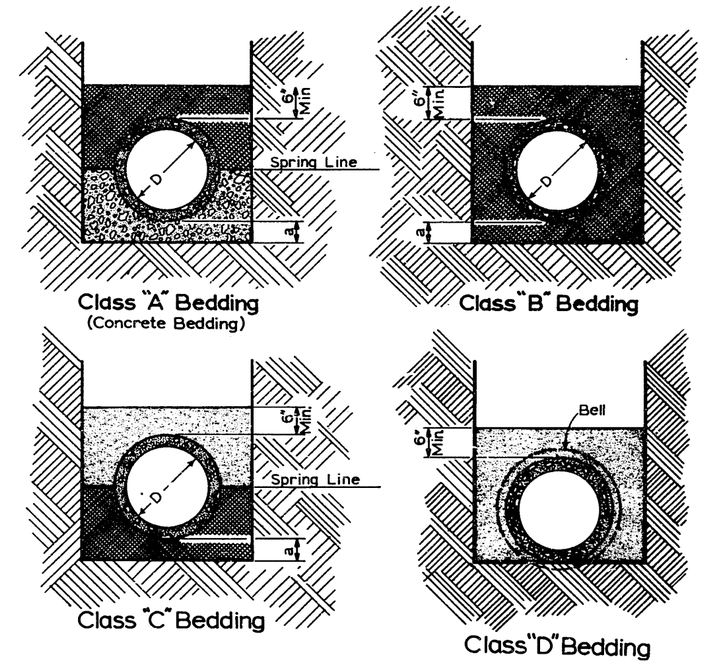

Mineral Aggregate Per Std. Specs. 4-01
Type 9 for rigid pipe.
Type 22 for flexible pipe.

Concrete Class 4 ($1\frac{1}{2}$) (Min)

Selected Native Material

NOTES:

1. For Trench Width, See Std. Plan 284.
   a = 4" When "D" is less than 30"
   a = 6" When "D" is 30" or more.
2. For Class "D" Bedding, Excavate for Bell.
3. For Class "B" Bedding for Water Mains, See Special Provisions.

Ref. Std. Spec. Sec. 7-17.

Do Not Scale

APPROVED BY THE BOARD OF PUBLIC WORKS 10/31, 1986 CHAIRMAN ATTEST: EXEC SECRETARY	CITY OF SEATTLE DEPARTMENT OF ENGINEERING	Pipe Bedding

Standard Plan No. 286a

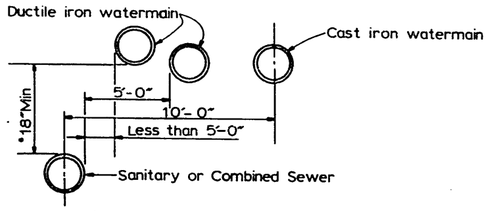

*If vertical separations cannot be obtained sewer pipe shall be constructed of ductile iron pipe, with standard watermain joints and pressure tested for watertightness prior to backfilling.

PARALLEL INSTALLATION

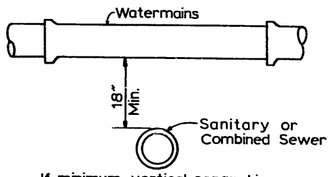

If minimum vertical separations cannot be met, watermain must be ductile iron pipe.

CROSSING WATER OVER SEWER

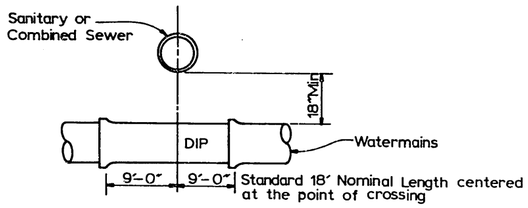

Provide adequate structural support for the sewer to prevent excessive deflection of joints and settling on and breaking the watermain

CROSSING WATER UNDER SEWER

NOTES:

1. Exceptions to the above must be approved by the Seattle Water Department, Water Quality Division.
2. Ordinance 97016 applies to Installation of Side Sewers relative to the location of Watermains and Water Services.

Spacing & Clearances Between Sewers & Watermains

Do not Scale

APPROVED BY THE BOARD OF PUBLIC WORKS 10/31, 1986 CHAIRMAN ATTEST: EXEC SECRETARY	CITY OF SEATTLE DEPARTMENT OF ENGINEERING	Sewer & Water Spacing & Clearances

Standard Plan No. 286b

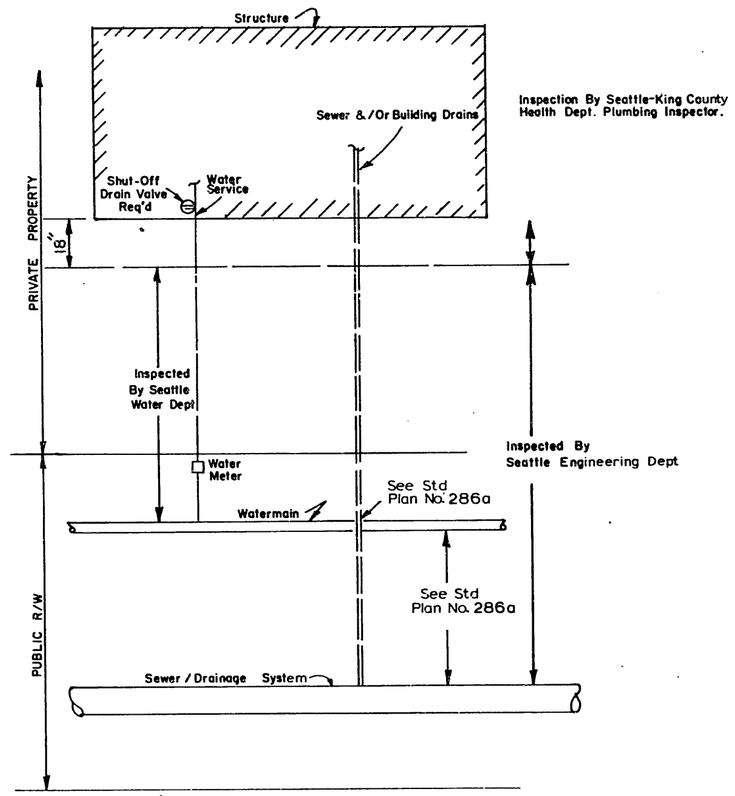

NOTES:

1. IF MINIMUMS ARE NOT ACHIEVABLE, SEWER/DRAIN MUST BE DUCTILE IRON PIPE
2. EXCEPTIONS TO THE ABOVE MUST BE APPROVED BY THE SEATTLE WATER DEPT. WATER QUALITY DIVISION.
3. EXCEPTION – IN ANGLE CROSSINGS BETWEEN 45° AND 90° THIS DISTANCE MAY RANGE BETWEEN 6' AND 9'. SEE NOTE 2 FOR CROSSINGS AT LESS THAN 45°.

APPROVED BY THE BOARD OF PUBLIC WORKS 10/31, 1986 CHAIRMAN ATTEST: EXEC SECRETARY	CITY OF SEATTLE DEPARTMENT OF ENGINEERING	Sewer/Water Clearances

Standard Plan No. 300a

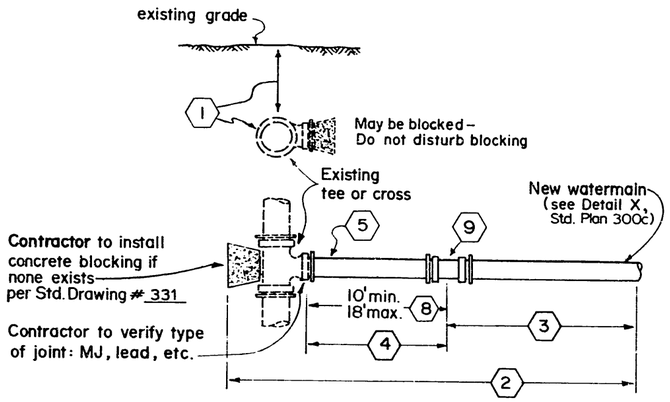

Connections to existing tee or cross

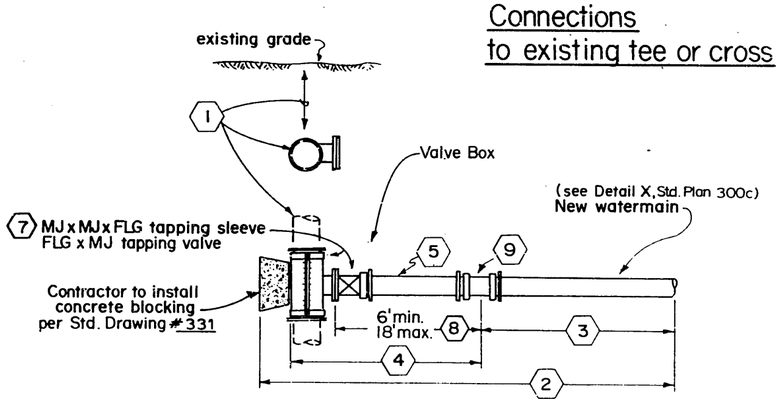

Connections to existing main, no tee or cross (tapping sleeve & tapping valve)

For Legend ⬡ and Notes See Standard Plan No. 300c
Ref. Std. Spec. Sec. 7-11

Do Not Scale

APPROVED BY THE BOARD OF PUBLIC WORKS 10/21 19[illegible] CHAIRMAN ATTEST: [illegible] EXEC SECRETARY	CITY OF SEATTLE DEPARTMENT OF ENGINEERING	Connections to Existing Watermains

Standard Plan No. 300b

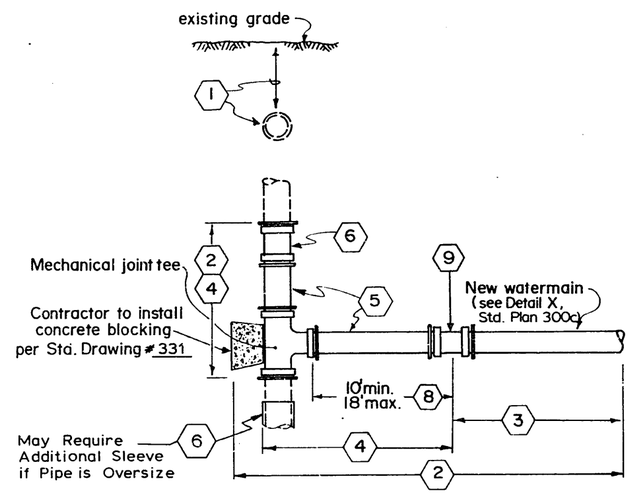

Connections to existing main, no tee or cross (cut in new tee)

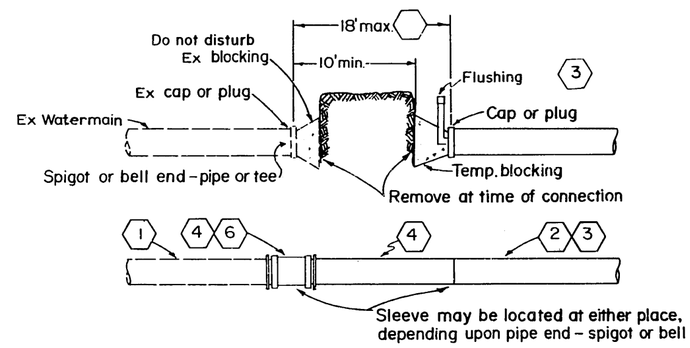

Connections to existing main, stub, or end outlet of tee or cross.

For Legend ⬡ and Notes See Standard Plan No. 300c
Ref. Std. Spec. Sec. 7-11

Do Not Scale

APPROVED BY THE BOARD OF PUBLIC WORKS 10/21 19[illegible] CHAIRMAN ATTEST: [illegible] EXEC SECRETARY	CITY OF SEATTLE DEPARTMENT OF ENGINEERING	Connections to Existing Watermains

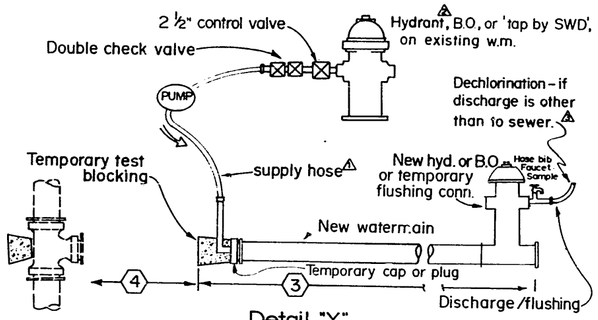

Detail "X"
Temporary flushing/testing conn.

⚠ Clean potable water hose only. Size per table in specs.
⚠ Hydrant permit required.
⚠ Check with sewer utility before discharge to sewers.

NOTES

All fittings to be ductile iron.
All excavation shall provide a minimum of 1' clear around pipe and fittings.

1. Contractor to determine alignment & grade of existing facility prior to installing new watermain. Seattle Water Department to determine outside diameter of existing facility at same time contractor excavates to determine alignment & grade.
2. All excavation, pipe, fittings (except as noted below), other material, backfill, compaction, & street restoration by contractor. All materials to be on job site prior to shutdown of existing main.
3. Installed by contractor
4. Contractor Furnished, Installed by Seattle Water Department
5. Watermain with plain ends
6. Mechanical Joint Sleeve, Spacer cut to fit gap - furnished and inserted at time of connection by Seattle Water Department.
7. Tapping sleeve & tapping valve furnished and installed by Seattle Water Dept.
8. Applies to pipes 4" through 12". All larger sizes to be determined on a case by case basis.
9. Mechanical Joint Sleeve, Spacer cut to fit gap. Furnished by Contrator and installed by Seattle Water Department.

Ref. Std. Spec. Sec. 7-11

APPROVED BY THE BOARD OF PUBLIC WORKS 10/21, 19 76 CHAIRMAN ATTEST: EXEC SECRETARY	CITY OF SEATTLE DEPARTMENT OF ENGINEERING	Connections to Existing Watermains

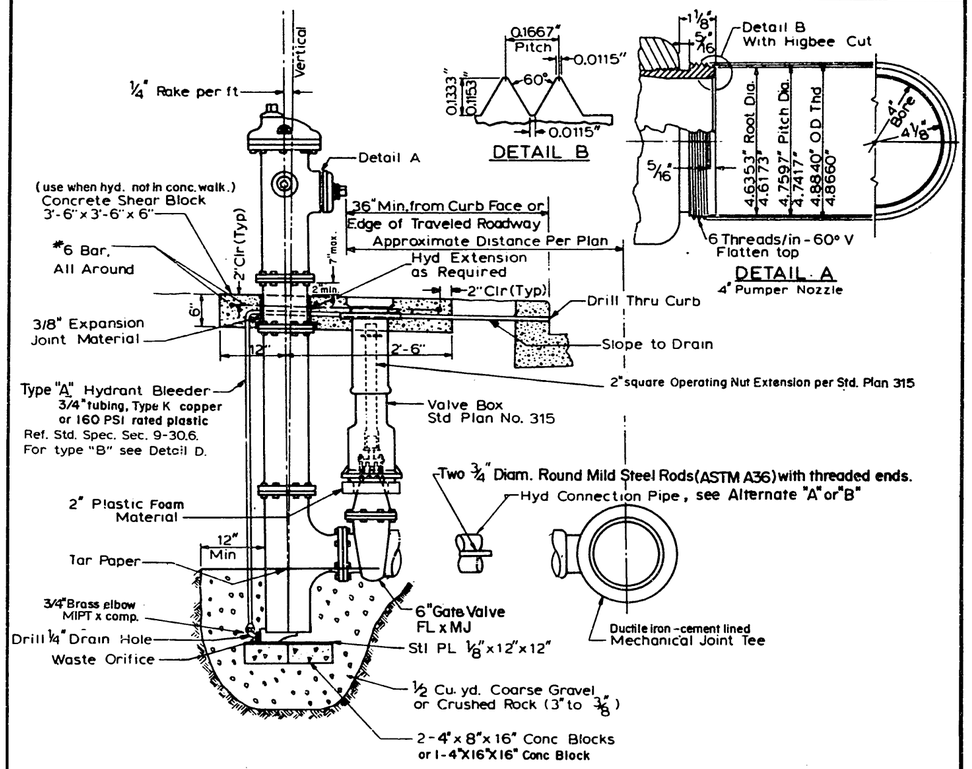

Hydrant Detail
Scale: 1" = 1'

6" Hydrant connection pipe shall be DIP, CL 52

After backfilling, the outside of the hydrant (above the ground line) shall be thoroughly cleaned and painted with one coat of hydrant green paint — Farwest Paint Co., 40255 or approved equal.

The threaded nipple on the 4 in. pumper nozzle shall be equipped with the blunt start or Higbee Cut.

The 2½ in. nipples shall be in accordance with the National Fire Protection Association Bulletin No. 194, dated 1974

Hydrant tees shall be set horizontally.

Type A Hydrant Bleeder shall be used when curbs are present, otherwise use Type B.

After installation, all shackle bolts, nuts, mechanical joint glands, and shackle rods shall be cleaned and coated with two coats of asphalt, Royston Roskote # 612 XM or approved equal.

Pumper port to face curb, or as directed by the engineer.
Ref. Std. Spec. Sec. 7-14

APPROVED BY THE BOARD OF PUBLIC WORKS 10/21, 19 76 CHAIRMAN ATTEST: EXEC SECRETARY	CITY OF SEATTLE DEPARTMENT OF ENGINEERING	Hydrant Setting Detail

Standard Plan No. 310b

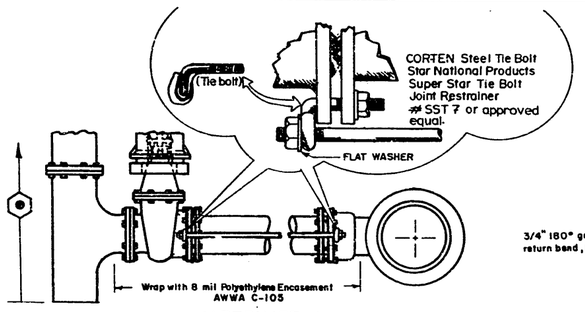

ALTERNATE A

Tie bolt Restraint

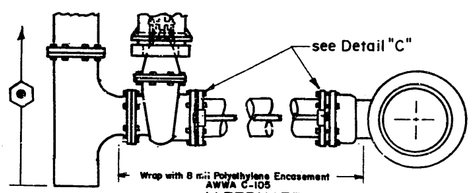

ALTERNATE B

Mechanical joint gland w/lugs

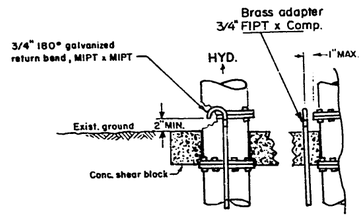

Type "B" Hydrant Bleeder

DETAIL D

⬢ Where watermains are installed with polyethylene encasement or tape coatings, the hydrant barrel and valve shall be similarly incased or coated.

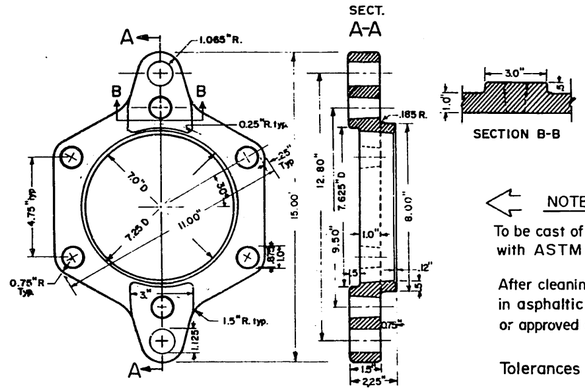

DETAIL "C" — 6" Mechanical Joint Gland, w/lugs

NOTES

To be cast of Ductile Iron in conformance with ASTM specs A536-class 80-55-06

After cleaning, the casting shall be hot dipped in asphaltic varnish, Royston Roskote # 612XM or approved equal.

Tolerances per CIPRA handbook.

Ref. Std. Spec. Sec. 7-14

APPROVED BY THE BOARD OF PUBLIC WORKS 10/31 1984 CHAIRMAN ATTEST: EXEC SECRETARY	CITY OF SEATTLE DEPARTMENT OF ENGINEERING	Hydrant Setting Detail

Standard Plan No. 311a

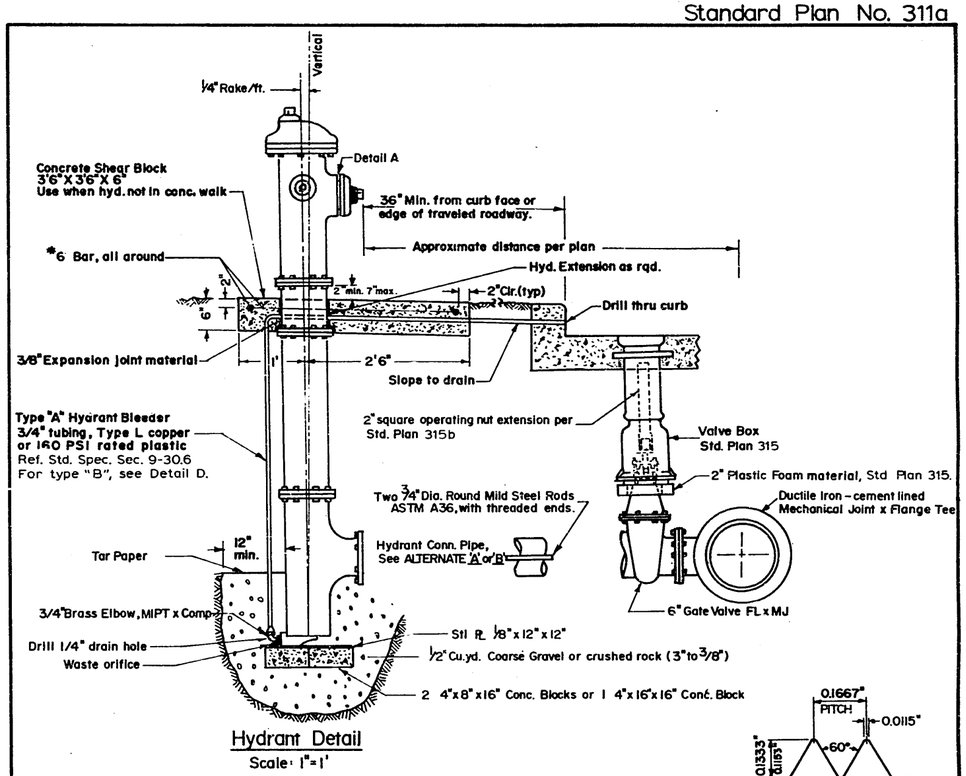

Hydrant Detail

Scale: 1" = 1'

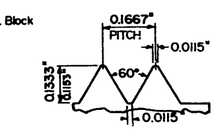

DETAIL B

6" Hydrant connection pipe shall be DIP, CL52

Hydrant tees shall be set horizontally.

The threaded nipple on the 4" pumper nozzle shall be equipped with the blunt start or Higbee Cut.

The 2 1/2" nipples shall be in accordance with the National Fire Protection Association Bulletin no. 194, dated 1974.

Type A Hydrant Bleeder shall be used when curbs are present, otherwise use Type B.

After installation, all shackle bolts, nuts, mechanical joint glands, and shackle rods shall be cleaned and coated with two coats of asphalt, Royston Roskote # 612XM or approved equal.

After backfilling, the outside of the hydrant (above the ground line) shall be thoroughly cleaned and painted with one coat of hydrant paint — Farwest Paint Co., 40255 or approved equal.

Pumper port to face curb, or as directed by the engineer.

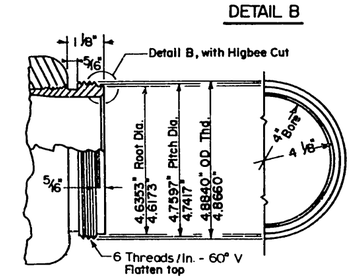

DETAIL A

4" Pumper Nozzle

Ref. Std. Spec. Sec. 7-14

APPROVED BY THE BOARD OF PUBLIC WORKS 10/31 1984 CHAIRMAN ATTEST: EXEC SECRETARY	CITY OF SEATTLE DEPARTMENT OF ENGINEERING	Hydrant Setting Detail

Standard Plan No. 311b

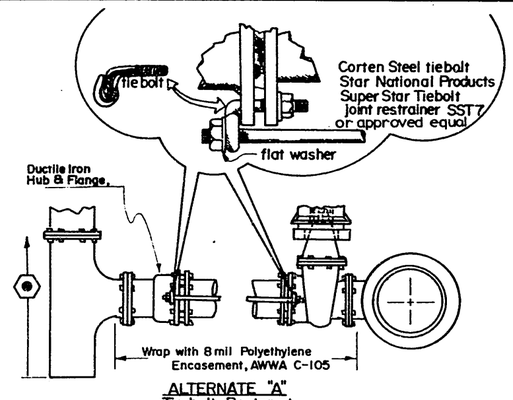

ALTERNATE "A"
Tie bolt Restraint

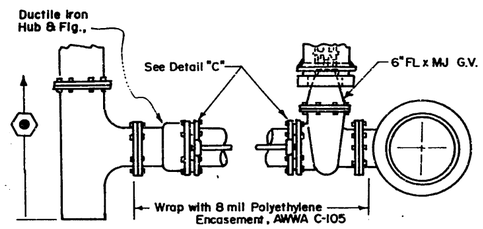

ALTERNATE "B"
Mechanical joint gland w/lugs

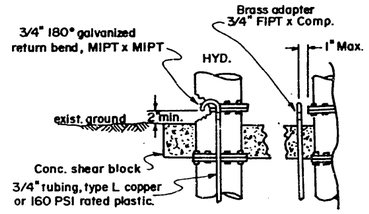

Type "B" Hydrant Bleeder
DETAIL D

Where watermains are installed with polyethylene encasement or tape coatings, the hydrant barrel and valve shall be similarly incased or coated.

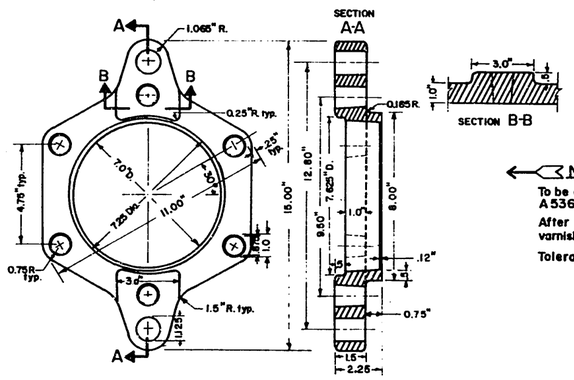

DETAIL C — 6" Mechanical Joint Gland, w/lugs

NOTES

To be cast of ductile iron in conformance with ASTM specs A536-class 80-55-06

After cleaning, the casting shall be hot dipped in asphaltic varnish, Royston Roskote #612 XM or approved equal.

Tolerances per CIPRA handbook.

Ref. Std. Spec. Sec. 7-14

APPROVED BY THE BOARD OF PUBLIC WORKS 10/31, 1986 CHAIRMAN ATTEST: EXEC SECRETARY	CITY OF SEATTLE DEPARTMENT OF ENGINEERING	Hydrant Setting Detail

Standard Plan No. 312

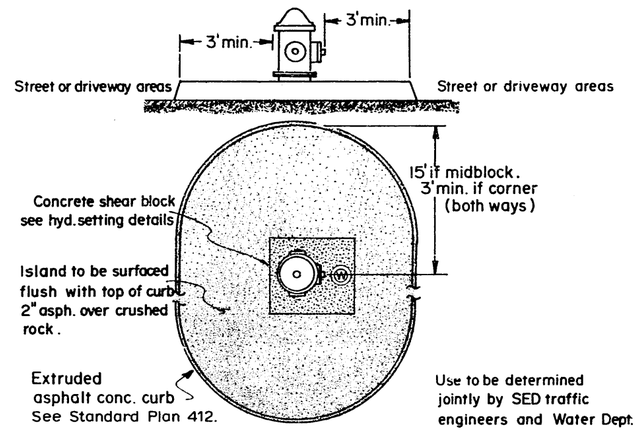

TRAFFIC ISLAND PROTECTION FOR FIRE HYDRANTS
IN PARKING AREAS

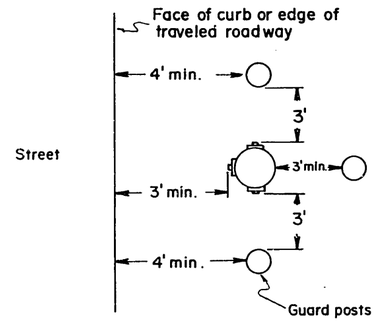

GUARD POST PROTECTION FOR HYD.
IN PARKING AREAS

USE TO BE DETERMINED, AND POSTS TO BE FURNISHED & INSTALLED, BY WATER DEPARTMENT.

Ref. Std. Spec. Sec. 7-14

APPROVED BY THE BOARD OF PUBLIC WORKS 10/31, 1986 CHAIRMAN ATTEST: EXEC SECRETARY	CITY OF SEATTLE DEPARTMENT OF ENGINEERING	Fire Hydrant Protection

The broken concrete slabs shall be a minimum of 3 1/2 inches in thickness and not less than 3' x 18" in size. The slabs shall be set in level layers of the same thickness, and the exposed faces shall be as smooth as the shape and size of the slabs will permit.

The rockery rock shall be sound, quarried rock; durable, free of cracks, and the source of rock shall be approved by the engineer before placement.

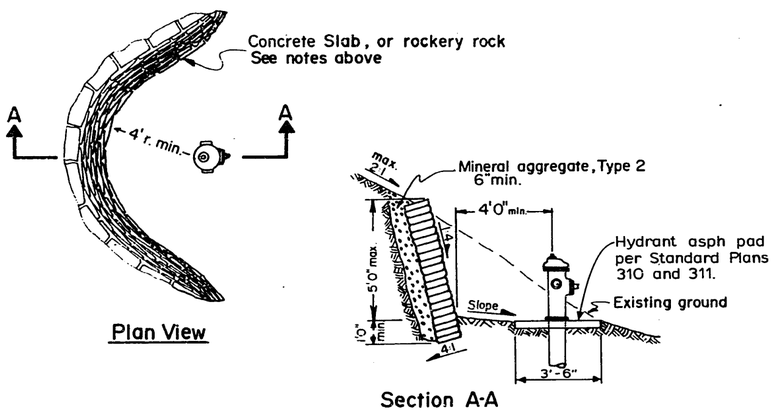

WALL FOR HYDRANTS

Ref. Std. Spec. Sec. 7-14

APPROVED BY THE BOARD OF PUBLIC WORKS 10/31/76 CHAIRMAN ATTEST: EXEC SECRETARY	CITY OF SEATTLE DEPARTMENT OF ENGINEERING	Wall Requirements for Hydrants

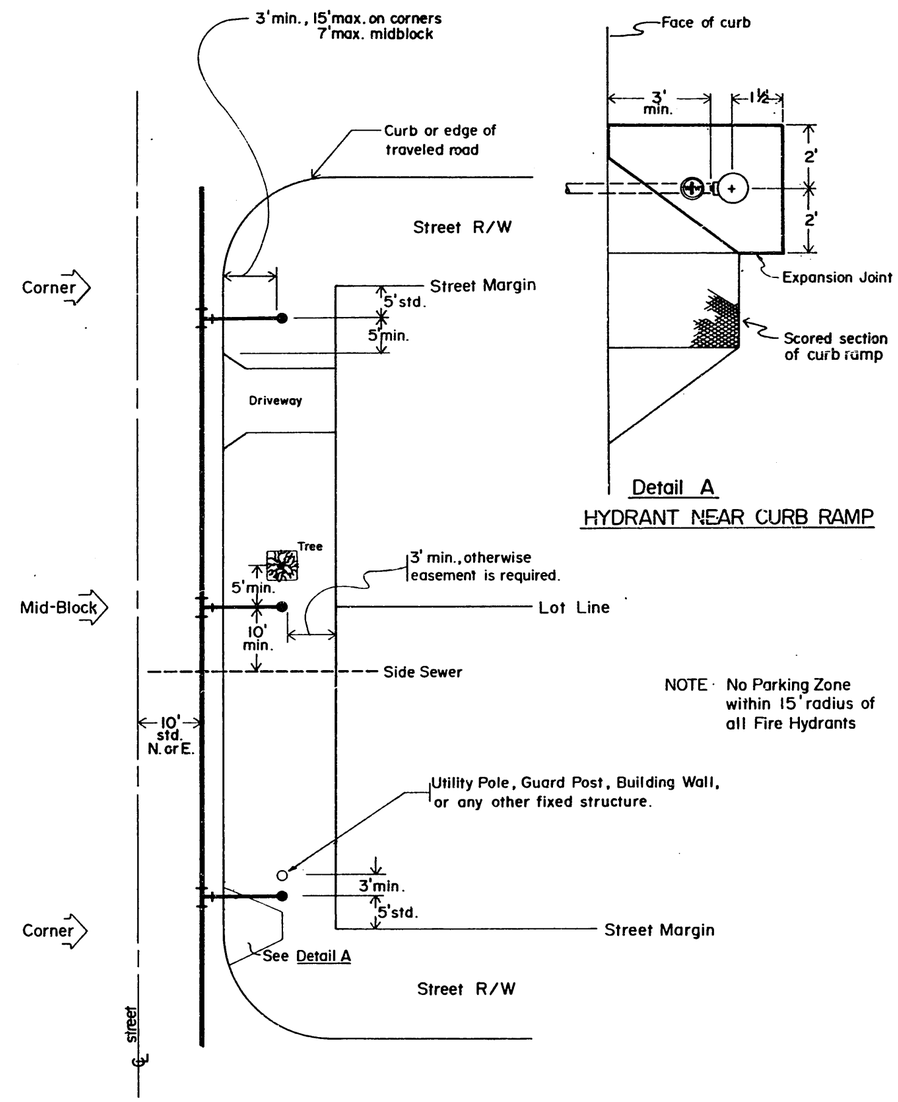

NOTE · No Parking Zone within 15' radius of all Fire Hydrants

Ref. Std. Spec. Sec. 7-14

APPROVED BY THE BOARD OF PUBLIC WORKS 10/31/85 CHAIRMAN ATTEST: EXEC SECRETARY	CITY OF SEATTLE DEPARTMENT OF ENGINEERING	Fire Hydrant Locations & Clearances

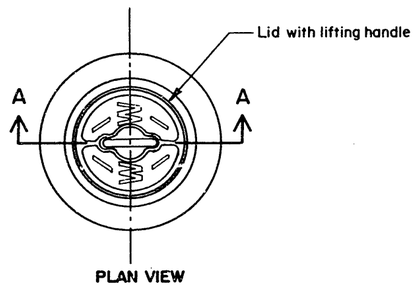

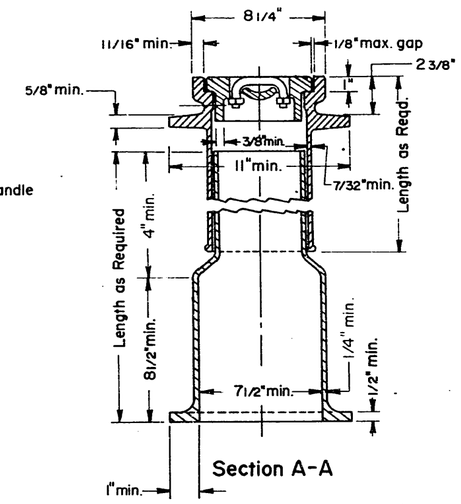

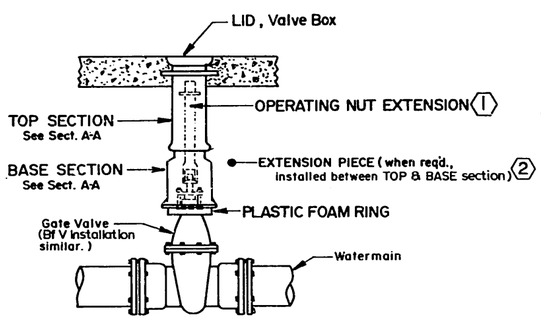

CAST IRON VALVE BOX ASSY.,
TYPICAL SETTING DETAIL

For Legend ⬡ and Notes See Std. Plan 315b
Ref. Std. Spec. Sec. 9-30

Do Not Scale

APPROVED BY THE BOARD OF PUBLIC WORKS 10/31, 1986 CHAIRMAN ATTEST: EXEC SECRETARY	CITY OF SEATTLE DEPARTMENT OF ENGINEERING	Cast Iron Valve Box & Operating Nut Extension

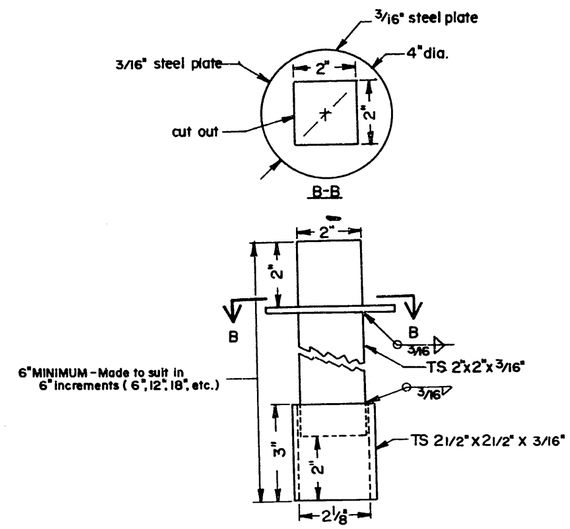

Operating Nut Extension Detail

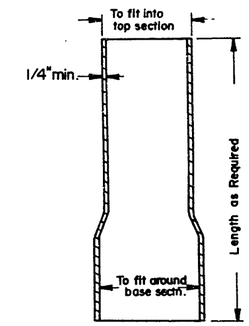

Extension Piece (2)
(When Required)

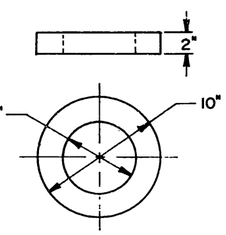

Plastic Foam Ring Detail
(Ref. Std. Spec. Sec. 9-30.2L)

NOTES

Frame and cover shall be tested for accuracy of fit and shall be marked in sets for delivery.

Castings and extensions shall be hot-dipped in asphaltic varnish, Royston Roskote # 612XM or approved equal.

Valve Boxes shall be Rich # 045, top section, lid, and base ; or Olympic Foundry – lid # 1908-33, top section # 1106-33, base section # 1301-33 ; or approved equal.

All castings shall be ductile or grey cast iron.

(1) An Operating Nut Extension shall be installed when the ground surface is more than 30" above the valve operating nut. The Operating Nut Extension shall extend into the top section of the Standard Valve Box and shall clear the bottom of the lid by a minimum of 6 inches.

(2) Extension pieces (when used) shall conform to minimum thickness requirements and shall fit into the top section and over the bottom section.

Ref. Std. Spec. Sec. 9-30

APPROVED BY THE BOARD OF PUBLIC WORKS 10/31, 1986 CHAIRMAN ATTEST: EXEC SECRETARY	CITY OF SEATTLE DEPARTMENT OF ENGINEERING	Cast Iron Valve Box & Operating Nut Extension

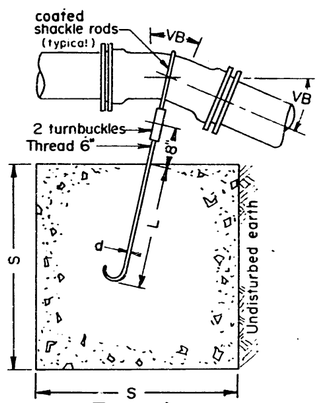

Type A
No Scale

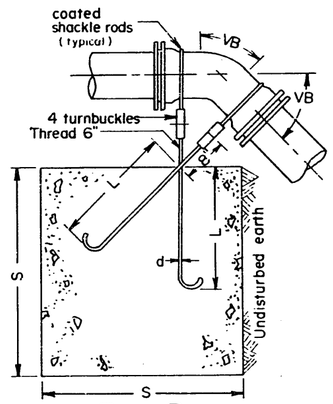

Type B
No Scale

TYPE "A" BLOCKING for 11¼° & 22½° Vertical Bends						
		VB		S	d	L
Pipe size Nom. Diameter-inches	Test Pressure p.s.i.	Vertical Bend Degrees	No. of cu.ft. of Conc. Blocking	Side of Cube feet	Diameter of Shackle Rods(2) inches	Depth of Rods in Concrete inches
4"	300	11¼	8	2	5/8"	18
		22½	12	2¼		24
6"	300	11¼	12	2¼	5/8"	24
		22½	27	3		
8"	300	11¼	16	2½	5/8"	24
		22½	43	3½		
12"	300	11¼	64	4	3/4"	24
		22½	125	5	7/8"	36

TYPE "B" BLOCKING for 45° Vertical Bends						
		VB		S	d	L
Pipe size Nom. Diameter-inches	Test Pressure p.s.i.	Vertical Bend Degrees	No. of cu.ft. of Conc. Blocking	Side of Cube feet	Diameter of Shackle Rods(4) inches	Depth of Rods in Concrete inches
4"	300	45	27	3	5/8"	20
6"			64	4		
8"			125	5		
12"	300		216	6	7/8"	30

For Notes See Standard Plan 330b.

Ref. Std. Spec. Sec. 7-11

APPROVED BY THE BOARD OF PUBLIC WORKS
12/11, 19[illegible] CHAIRMAN
ATTEST: [illegible] SEC SECRETARY

CITY OF SEATTLE
DEPARTMENT OF ENGINEERING

Watermain Thrust Blocking
Vertical Fittings

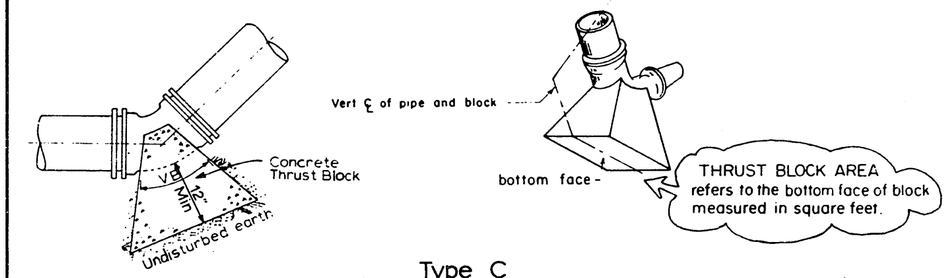

Type C
No Scale

TYPE "C" BLOCKING for 11¼°, 22½°, 45°, and 90° Vertical Bends — THRUST BLOCK AREA IN SQUARE FEET									
SOIL	Firm silt or firm silty sand			Compact Sand			Compact Sand & Gravel		
PIPE SIZE / FITTING →	90° Bend	Tee 45° bend and Dead End	11¼° and 22½° bend	90° Bend	Tee 45° bend and Dead End	11¼° and 22½° bend	90° Bend	Tee 45° bend and Dead End	11¼° and 22½° bend
4"	5.8	4.2	1.7	2.9	2.1	1.0	2.2	1.6	1.0
6"	13.3	9.4	3.8	6.7	4.7	1.9	5.0	3.5	1.4
8"	23.3	16.7	6.7	11.7	8.4	3.4	8.8	6.3	2.5
12"	53.0	37.5	15.0	26.5	18.8	7.5	20.0	14.0	5.6
Areas calculated on 300 psi test pressure and 36" min. cover over w.m.									

w.m. = Watermain

Notes

Location and size of blocking for pipe larger than 12" and for soil types different than shown shall be determined by the engineer.

All blocking for vertical fittings (poured in place) shall bear against undisturbed native ground.

All poured Thrust Blocks shall be in place and sufficient time shall be allowed for the concrete to cure and trench shall be backfilled and compacted prior to pressure testing.

All blocking to be concrete Cl 5 (1-½).

After installation, shackle rods & turnbuckles shall be cleaned and coated with 2 coats of asphaltic varnish, Royston Roykote #612XM or approved equal.

Shackle rods shall be round mild steel, ASTM A-36 with threads on ends only.

Blocking against fittings shall bear against the greatest fitting surface area possible, but shall not cover or enclose bell ends, joint bolts or glands

Ref. Std. Spec. Sec. 7-11

APPROVED BY THE BOARD OF PUBLIC WORKS
10/31, 19[illegible] CHAIRMAN
ATTEST: [illegible] SEC SECRETARY

CITY OF SEATTLE
DEPARTMENT OF ENGINEERING

Watermain Thrust Blocking
Vertical Fittings

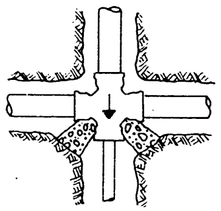

Unbalanced Cross

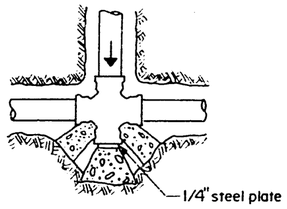

Cross with Plug

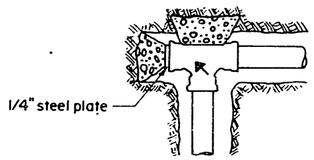

Plugged Tee

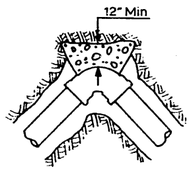

Horizontal Bend

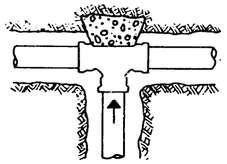

Tee

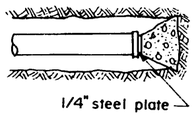

Pipe & Cap

THRUST BLOCK AREA IN SQUARE FEET (See Standard Plan No 331b)									
SOIL	Firm silt or firm silty sand			Compact Sand			Compact Sand & Gravel		
FITTING	90° Bend	TEE, 45° bend, cap or plug	11 1/4° and 22 1/2° bnd	90° Bend	TEE, 45° bend, cap or plug	11 1/4° and 22 1/2° bnd	90° Bend	TEE, 45° bend, cap or plug	11 1/4° and 22 1/2° bnd
PIPE SIZE 4"	7.0	4.2	1.7	2.9	2.1	1.0	2.2	1.6	1.0
6"	13.3	9.4	3.8	6.7	4.7	1.9	5.0	3.5	1.4
8"	23.3	16.7	6.7	11.7	8.4	3.4	8.8	6.3	2.5
12"	53.0	37.5	15.0	26.5	18.8	7.5	20.0	14.0	5.6
Areas calculated on 300 psi test pressure and 36" min. cover over w.m.									

Ecology Blocks, per Standard Plan 460 may be used in lieu of poured-in-place blocking for fittings in shaded portion of table.

For Notes See Standard Plan 331b

Ref. Std. Spec. 7-11

Do Not Scale

APPROVED BY THE BOARD OF PUBLIC WORKS
10/21, 19[illegible] CHAIRMAN
ATTEST: [illegible] EXEC SECRETARY

CITY OF SEATTLE
DEPARTMENT OF ENGINEERING

Watermain Thrust Blocking
Horizontal Fittings

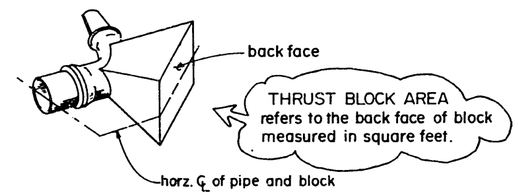

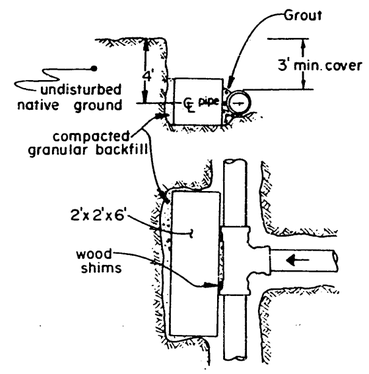

ECOLOGY BLOCK DETAIL

Notes

Location and size of blocking for pipe larger than 12" and for soil types different than shown shall be determined by the engineer.

All blocking for horizontal fittings (poured in place) shall bear against undisturbed native ground.

All poured Thrust Blocks shall be in place and sufficient time shall be allowed for the concrete to cure and trench shall be backfilled and compacted prior to pressure testing.

All blocking to be concrete Cl.5 (1-½)

Blocking against fittings shall bear against the greatest fitting surface area possible, but shall not cover or enclose bell ends, joint bolts or glands.

All horizontal blocking thrust areas shall be centered on pipe.

Where poured-in-place blocking is required at a point of connection to an existing watermain, the blocking shall be installed prior to connection and temporary wood shims installed, and space between fitting and blocking grouted, similar to Ecology Block detail.

Ref. Std. Spec. Sec. 7-11

APPROVED BY THE BOARD OF PUBLIC WORKS
10/21, 19[illegible] CHAIRMAN
ATTEST: [illegible] EXEC SECRETARY

CITY OF SEATTLE
DEPARTMENT OF ENGINEERING

Watermain Thrust Blocking
Horizontal Fittings

Standard Plan No. 340a

Type A

NON-TRAFFIC INSTL.

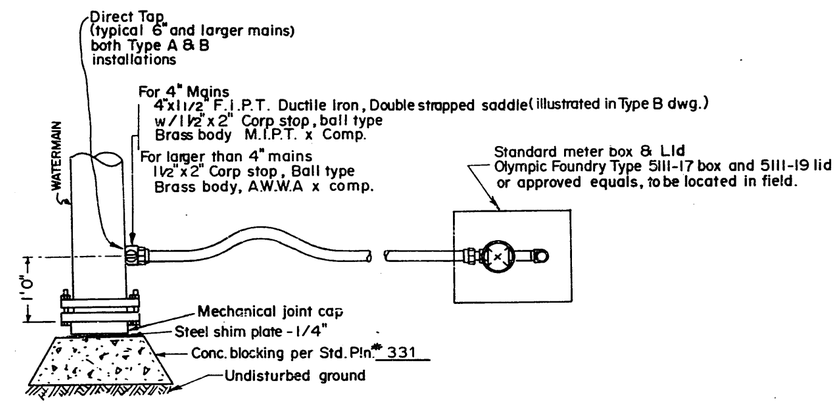

PLAN VIEW

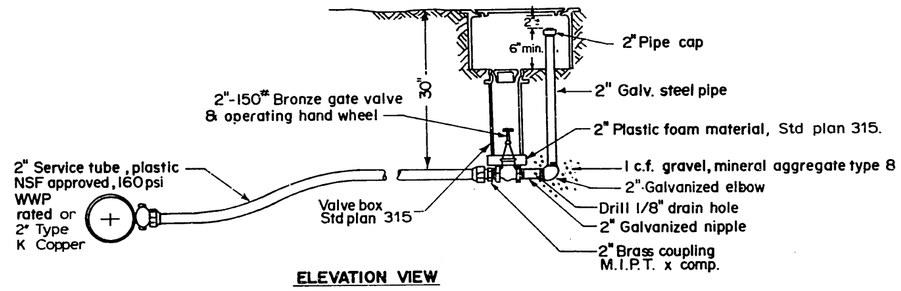

ELEVATION VIEW

2" BLOW OFF DETAIL

SCALE 1" = 1'

Ref. Std. Spec. Sec. 7-11 and 9-30

APPROVED BY THE BOARD OF PUBLIC WORKS 10/31, 19[illegible] CHAIRMAN ATTEST: [illegible] SECRETARY	CITY OF SEATTLE DEPARTMENT OF ENGINEERING	2" Blow Off Detail

Standard Plan No. 340b

NOTES

Where tape-wrapped ductile iron pipe is used the mechanical joint cap, corp and saddle (if required) shall be wrapped per AWWA C214.

Where PVC watermain is used the saddle shall be all bronze double strap.

Type B

TRAFFIC INSTL.

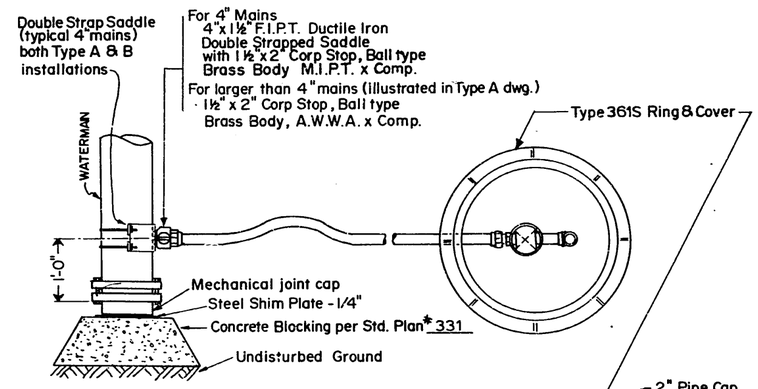

PLAN VIEW

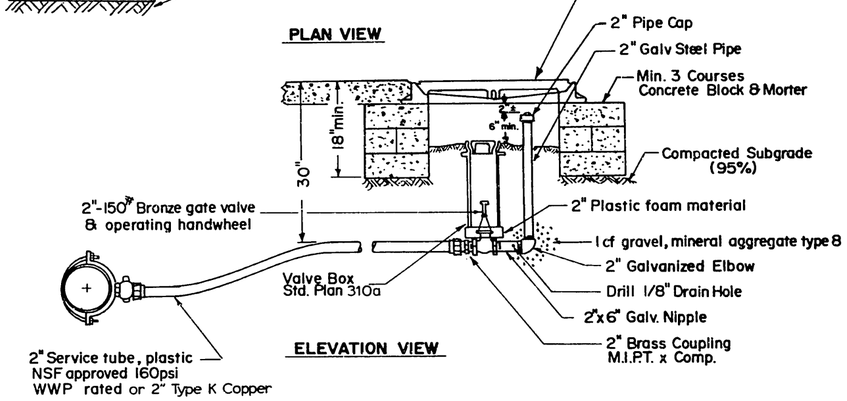

ELEVATION VIEW

2" BLOW OFF DETAIL

SCALE 1" = 1'

Ref Std Spec Sec 7-11 and 9-30

APPROVED BY THE BOARD OF PUBLIC WORKS 10/31, 19[illegible] CHAIRMAN ATTEST: [illegible] SECRETARY	CITY OF SEATTLE DEPARTMENT OF ENGINEERING	2" Blow Off Detail

Standard Plan No. 350

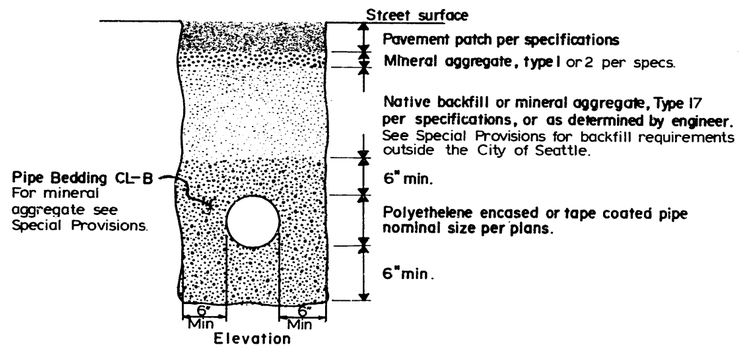

Trench backfill for pipe with protective tape coating or polyethelene encasement.

Trench width per std. plan 284.

Ref. Std. Spec. Sec. 7-10

APPROVED BY THE BOARD OF PUBLIC WORKS 10/21, 19 86 CHAIRMAN ATTEST: EXEC SECRETARY	CITY OF SEATTLE DEPARTMENT OF ENGINEERING	Watermain Pipe Bedding (Special)

Standard Plan No. 360

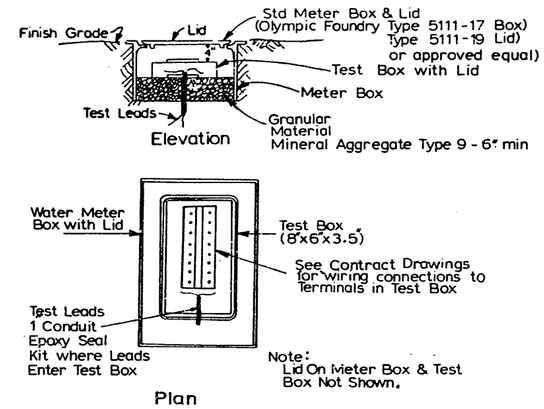

Electrolysis Test Station
Non Traffic Area

No Scale

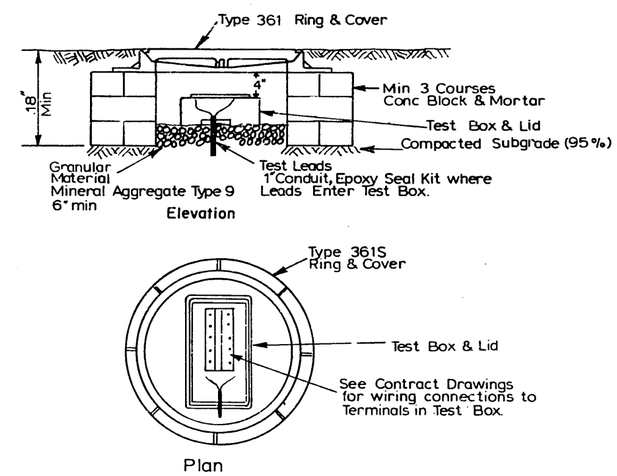

Electrolysis Test Station
Traffic Area

Ref. Std. Spec. Sec. 7-11

APPROVED BY THE BOARD OF PUBLIC WORKS 10/21, 19 86 CHAIRMAN ATTEST: EXEC SECRETARY	CITY OF SEATTLE DEPARTMENT OF ENGINEERING	Watermain Electrolysis Test Station

Standard Plan No. 361

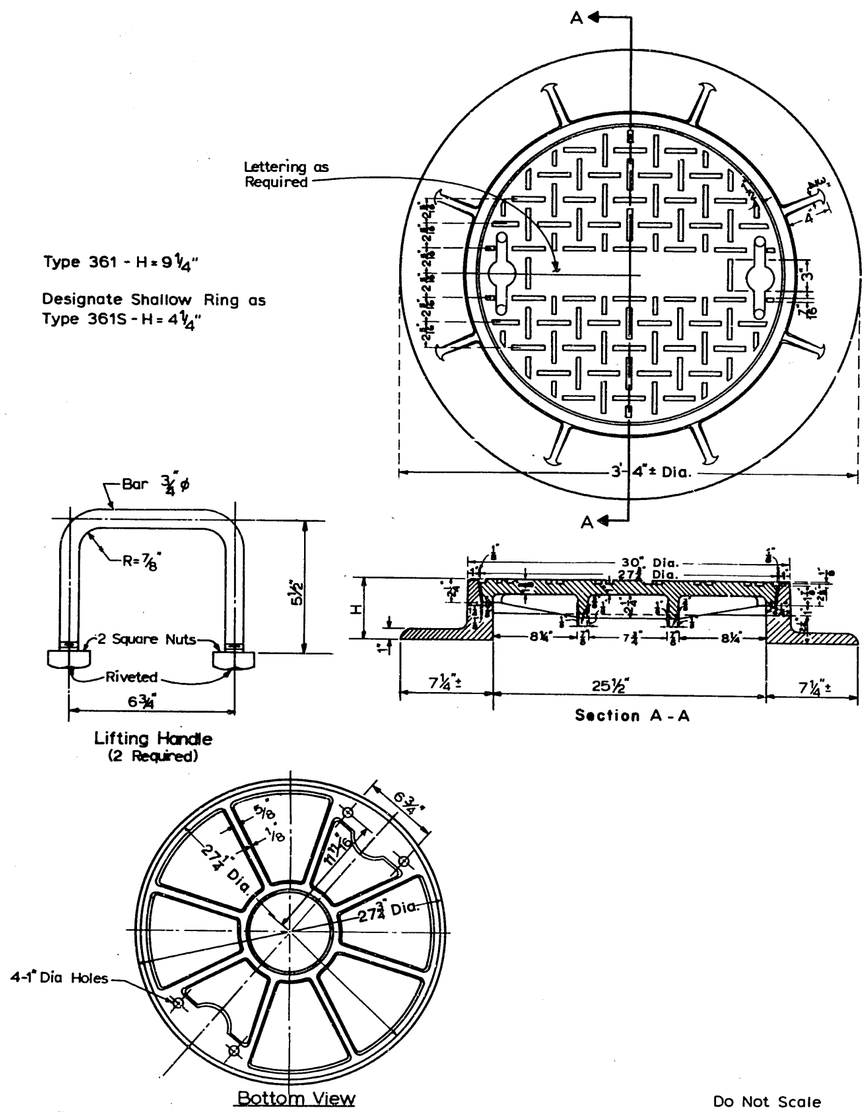

Type 361 - H = 9 1/4"

Designate Shallow Ring as Type 361S - H = 4 1/4"

Ring and Cover shall be tested for accuracy of fit and shall be marked in sets for delivery.

Do Not Scale

Ref. Std. Spec. Sec. 7-12

APPROVED BY THE BOARD OF PUBLIC WORKS 10/31, 1956 CHAIRMAN ATTEST: EXEC SECRETARY	CITY OF SEATTLE DEPARTMENT OF ENGINEERING	Type 361 - Valve Chamber Ring and Cover

Standard Plan No. 362

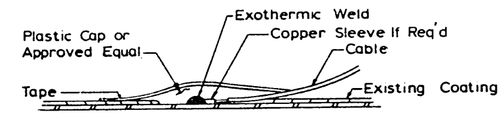

Notes:

1. Clean Weld Area to Bright Metal.
2. Weld Cable to Pipe using "Cadweld", or Approved Equal, Exothermic Weld.
3. Adapter Sleeve Required for Exothermic Welding of #12 AWG Wire & Smaller.
4. Clean Slag from Weld Area.
5. Insulate Weld with Royston Handy Cap or Approved Equal.
6. All Cleaned Area not Covered by Handy Cap Shall be Covered with 125 Mil Royston Tac Tape or Approved Equal.

Wire Connection

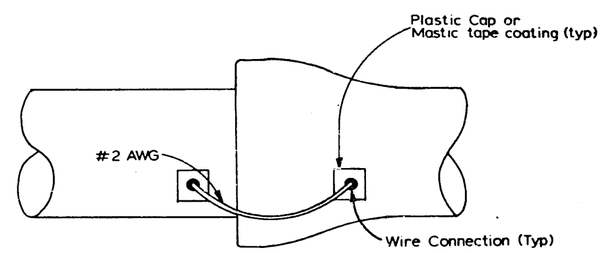

Slip Joint Bonding Connection

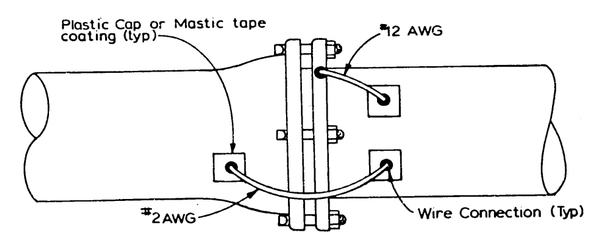

Mechanical Joint Bonding Connection

Ref. Std. Spec. Sec. 7-11

APPROVED BY THE BOARD OF PUBLIC WORKS 10/31, 1956 CHAIRMAN ATTEST: EXEC SECRETARY	CITY OF SEATTLE DEPARTMENT OF ENGINEERING	Joint Bonding for DIP Watermains

Standard Plan No. 363

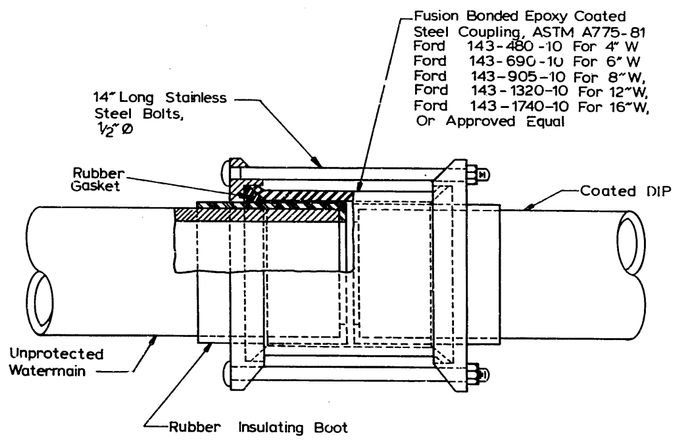

Ref. Std. Spec. Sec. 9-30

Do Not Scale

APPROVED BY THE BOARD OF PUBLIC WORKS 10/31, 1956 CHAIRMAN ATTEST: EXEC SECRETARY	CITY OF SEATTLE DEPARTMENT OF ENGINEERING	Isolating Coupling

Standard Plan No. 400

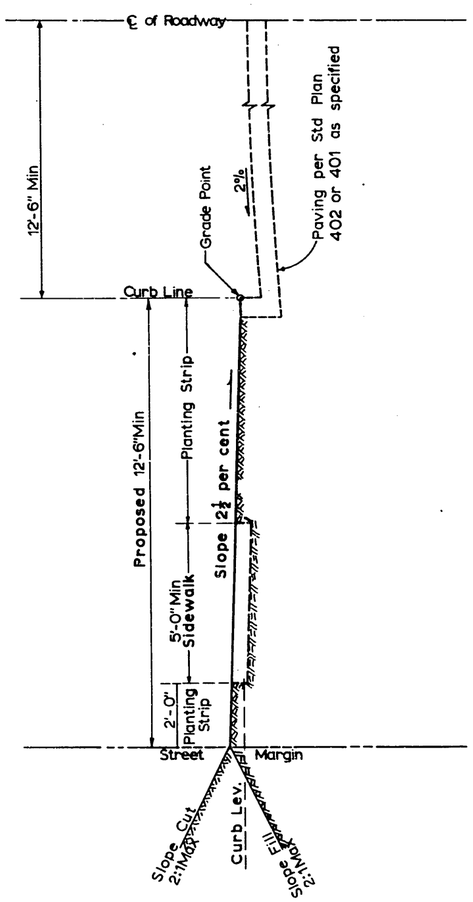

Do Not Scale

APPROVED BY THE BOARD OF PUBLIC WORKS 10/31, 1956 CHAIRMAN ATTEST: EXEC SECRETARY	CITY OF SEATTLE DEPARTMENT OF ENGINEERING	Half Section Grading

Standard Plan No. 401

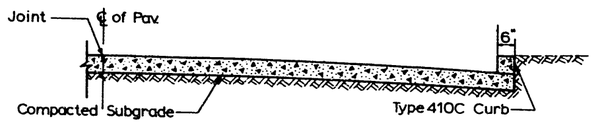

401 A-Cement Concrete Pavement with Integral Curb

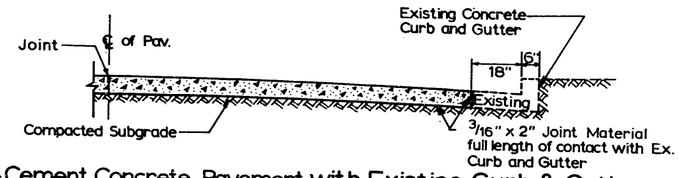

401 B-Cement Concrete Pavement with Existing Curb & Gutter

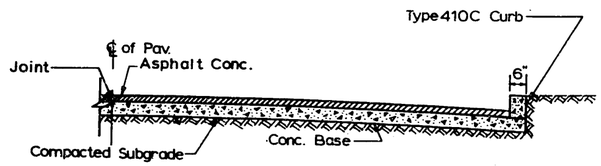

401 C-Asphalt Concrete on Cement Concrete Base

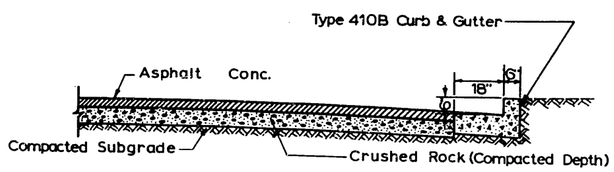

401 D-Asphalt Concrete on Crushed Rock Base

Notes
1 Pavement Width and Thickness as specified on plan.
2 Conc Cl 6(1½) unless otherwise specified on plan.

Ref. Std. Spec. Sec. 5-04, 5-06, 8-04.

Do Not Scale

APPROVED BY THE BOARD OF PUBLIC WORKS 10/31, 19 84 CHAIRMAN ATTEST: EXEC SECRETARY	CITY OF SEATTLE DEPARTMENT OF ENGINEERING	Residential Pavement Sections

Standard Plan No. 402

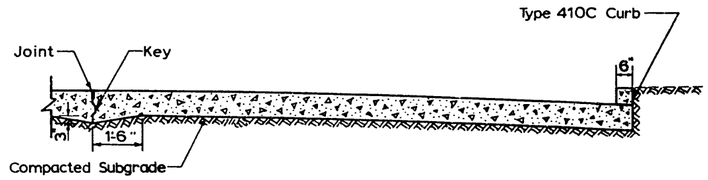

402A-Cement Concrete Pavement

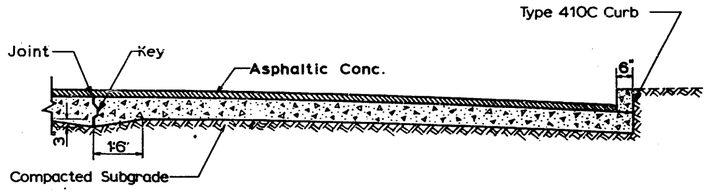

402B-Asphalt Concrete on Cement Concrete Base

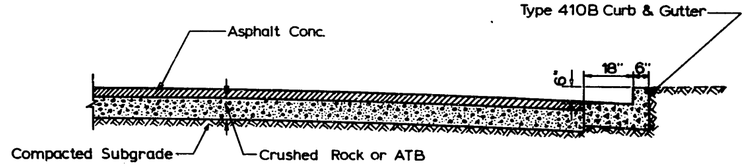

402C-Asphalt Concrete on Crushed Rock Base or ATB

Notes:
1. Pavement Width and Thickness as Specified on Plan.
2. Conc Cl 6(1½) Unless Otherwise Specified on Plan.

Ref. Std. Spec. Sec. 5-04, 5-06 & 8-04.

Do Not Scale

APPROVED BY THE BOARD OF PUBLIC WORKS 10/31, 19 86 CHAIRMAN ATTEST: EXEC SECRETARY	CITY OF SEATTLE DEPARTMENT OF ENGINEERING	Arterial Pavement Sections

Standard Plan No. 403

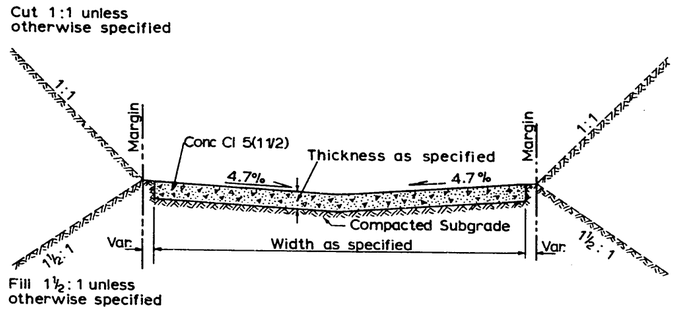

403 A - Cement Concrete Alley Pavement

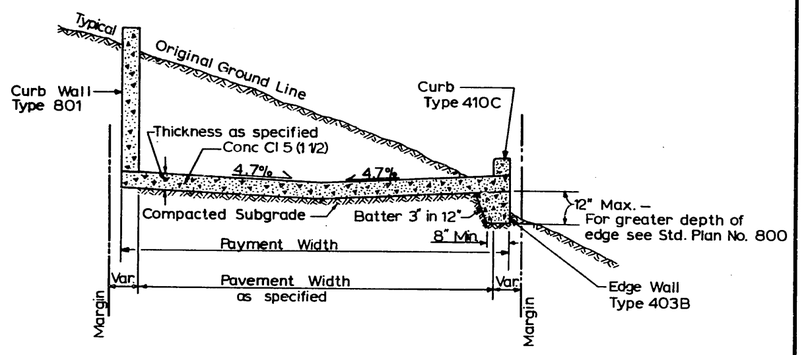

Cement Concrete Alley Pavement
403B-For Shallow Embankment Area

Note:
When alley pavement is 18' or wider place contraction joint along centerline of alley.

Ref. Std. Spec. Sec. 5-06

Do Not Scale

APPROVED BY THE BOARD OF PUBLIC WORKS 10/31 1986 CHAIRMAN ATTEST: SEC SECRETARY	CITY OF SEATTLE DEPARTMENT OF ENGINEERING	Cement Concrete Alley Pavements

Standard Plan No. 404a

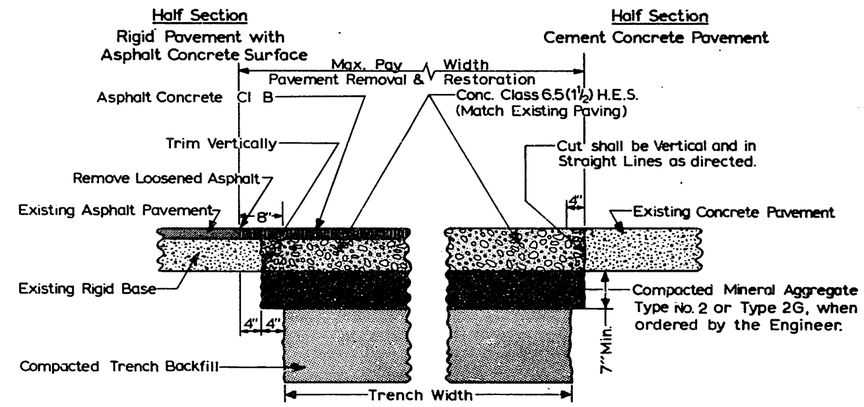

Typical Patch for Rigid Pavement

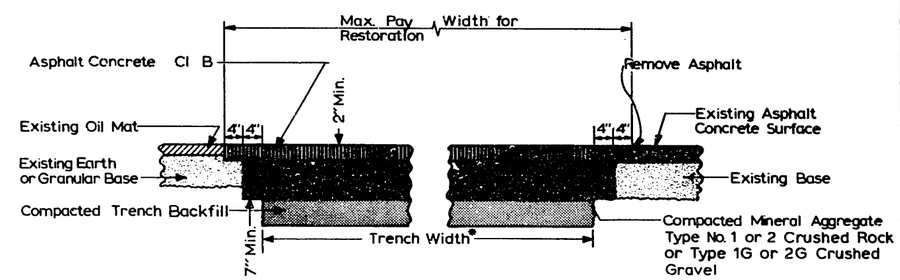

Typical Patch for Flexible Pavement

*Trench width refers to Max. Trench Pay width as called out on Std. Plan No. 284.

Actual width of restoration may be increased to meet requirements of "Street and Sidewalk Opening and Restoration Rules". See Std. Spec. Sec. 2-02.

Do Not Scale

APPROVED BY THE BOARD OF PUBLIC WORKS 10/31 1986 CHAIRMAN ATTEST: SEC SECRETARY	CITY OF SEATTLE DEPARTMENT OF ENGINEERING	Pavement Patching

Standard Plan No. 404b

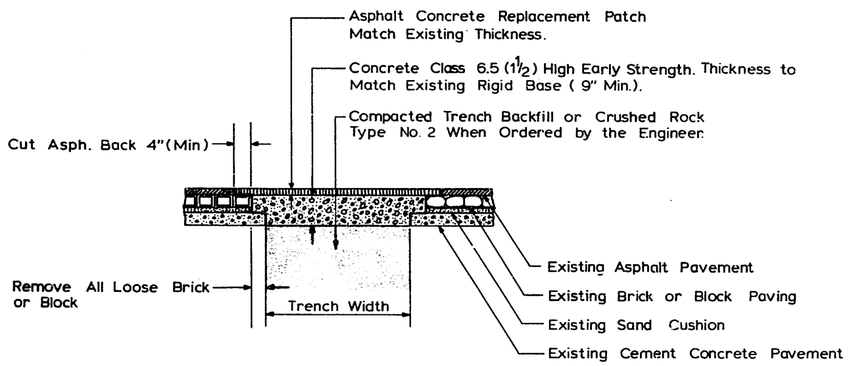

Asphalt over Rigid Base of Brick or Stone Block Pavement

Notes:

1. When a Stone or Brick Pavement is Overlayed with Asphalt, The Street Surface Pavement Becomes an Asphalt Street over Rigid Base.
2. If a Stone or Brick Pavement is Not Overlayed, the Method of Restoration is in Kind.
3. Refer to Standard Plan No.404a and the Specifications for Applicable Details & Requirements.

Ref. Std. Spec. Sec. 2-02

Do Not Scale

APPROVED BY THE BOARD OF PUBLIC WORKS 10/31, 1986 CHAIRMAN ATTEST: EXEC SECRETARY	CITY OF SEATTLE DEPARTMENT OF ENGINEERING	Pavement Patching

Standard Plan No. 405

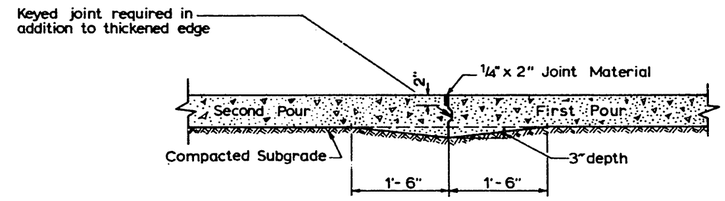

Construction Joint
Longitudinal or Transverse

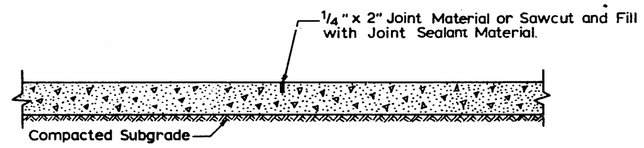

Contraction Joint
Longitudinal or Transverse

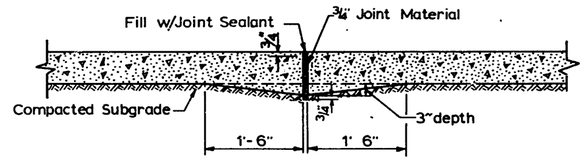

Through Joint
New Construction

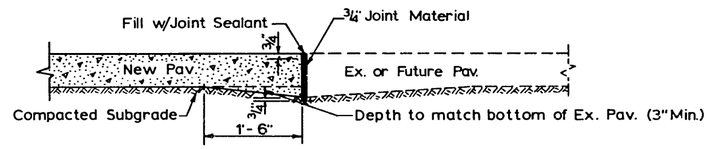

Through Joint
Between Old & New Construction

Pavement Thickness as
Specified on Plans.

Ref. Std. Spec. Sec. 5-06

Do Not Scale

APPROVED BY THE BOARD OF PUBLIC WORKS 10/31, 1986 CHAIRMAN ATTEST: EXEC SECRETARY	CITY OF SEATTLE DEPARTMENT OF ENGINEERING	Types of Joints for Concrete Pavement

Standard Plan No. 410

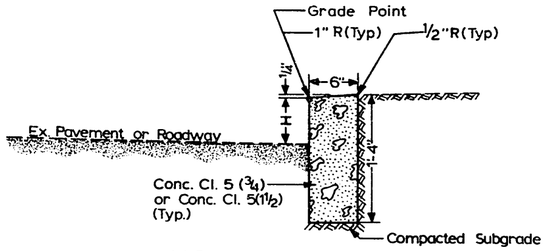

410 A Curb

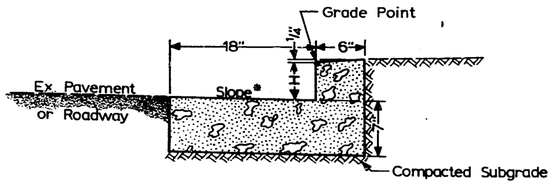

410 B-Curb and Gutter

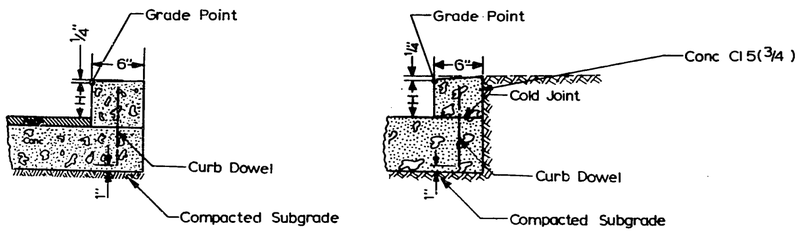

410 C Curb

"H" shall be 6" from finished roadway grade unless otherwise specified.

For Type 410A Curb, install 1/2" Through Joints full depth to match joints of existing pavement.

*Gutter shall be sloped the same as adjacent pavement or 2% min., whichever is greater.

See Std. Plan No. 411 for Curb Dowels.

Do Not Scale

Ref. Std. Spec. Sec. 8-04.

APPROVED BY THE BOARD OF PUBLIC WORKS 10/31, 1982 CHAIRMAN ATTEST: EXEC SECRETARY	CITY OF SEATTLE DEPARTMENT OF ENGINEERING	Type 410 Curb

Standard Plan No. 411

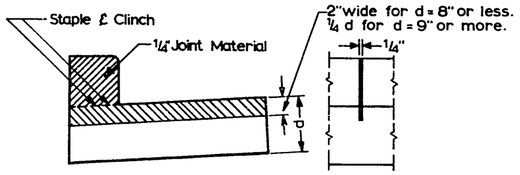

Contraction Joint For
Curb or Curb & Gutter

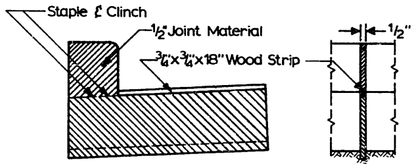

Through Joint For
Curb or Curb & Gutter

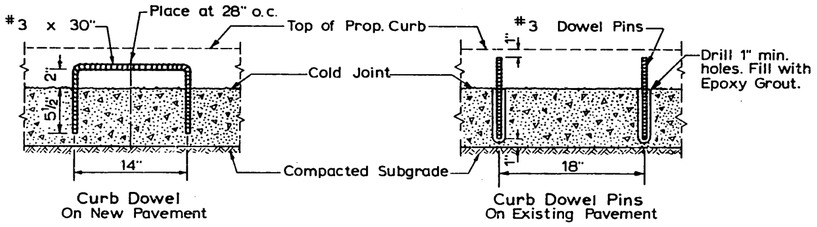

Dowels For Dowelled Curb Construction

Ref. Std. Spec. Sec. 8-04

Do Not Scale

APPROVED BY THE BOARD OF PUBLIC WORKS 10/31, 1982 CHAIRMAN ATTEST: EXEC SECRETARY	CITY OF SEATTLE DEPARTMENT OF ENGINEERING	Curb Joints & Dowels

Standard Plan No412

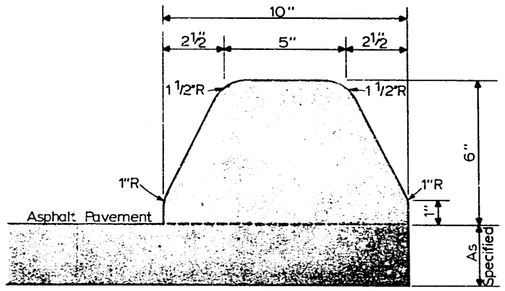

Extruded Asphalt Concrete Curb

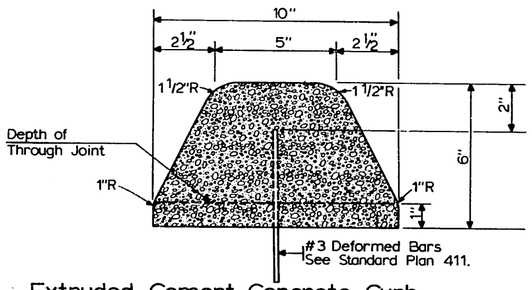

Extruded Cement Concrete Curb

Ref. Std. Spec. Sec. 8-06

APPROVED BY THE BOARD OF PUBLIC WORKS 10/31, 1986 CHAIRMAN ATTEST: EXEC SECRETARY	CITY OF SEATTLE DEPARTMENT OF ENGINEERING	Extruded Curb

Standard Plan No. 413

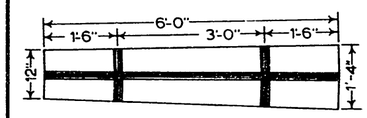

413 A-1 Connecting Divider

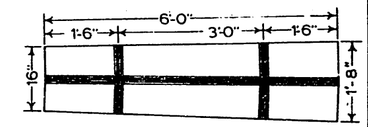

413 A-2 Connecting Divider

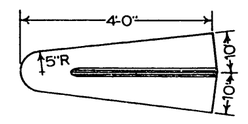

413 A Nosing

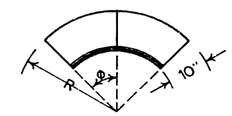

413 A Radial Curb
See Table Below Left

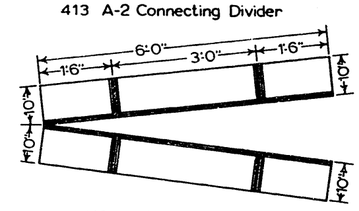

413 A Straight Section

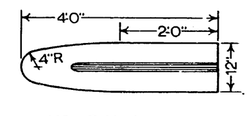

413 C Nosing

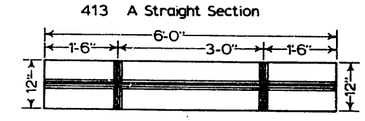

413 C Curb

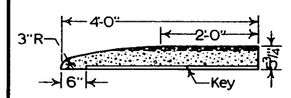

Section A ℄ C Nosing

The main body of the curb and the longitudinal rib shall form a uniform transition from a type C section to a type A (back to back) section.

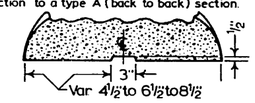

Section-A Connecting Dividers

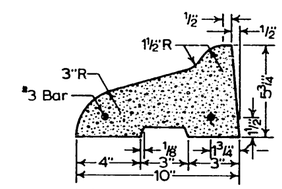

Section-A Radial Curb

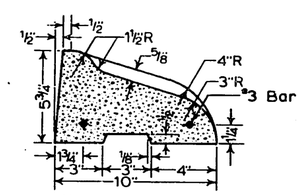

Section-A Straight Curb

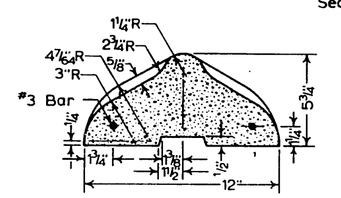

Section-C Curb

413 A Radial Curb		
Unit	Radius	Curb Return Angle (φ) Multiple
R1	1'-3"	45°00'
R2	1'-10"	30°00'
R3	2'-6"	22°30'
R4	5'-0"	11°27.54'
R5	10'-0"	5°43.77'
For Radii greater than 10' use segments of straight curb.		

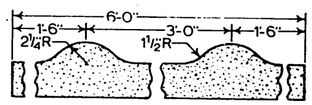

Longitudinal Section Thru Transverse Ribs

Ref. Std. Spec. Sec. 8-07

Do Not Scale

APPROVED BY THE BOARD OF PUBLIC WORKS 10/31, 1986 CHAIRMAN ATTEST: EXEC SECRETARY	CITY OF SEATTLE DEPARTMENT OF ENGINEERING	Traffic Curbs Precast Cement Concrete

Standard Plan No. 414

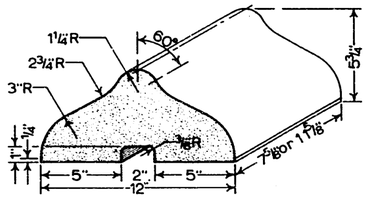

414 C-Block

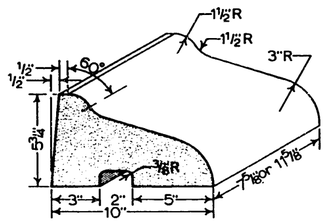

414 A-Block

Ref. Std. Spec. Sec. 8-07.

Do Not Scale

APPROVED BY THE BOARD OF PUBLIC WORKS 10/31, 1986 CHAIRMAN ATTEST: EXEC SECRETARY	CITY OF SEATTLE DEPARTMENT OF ENGINEERING	Traffic Curbs Block-Precast Cement Concrete

Standard Plan No. 415

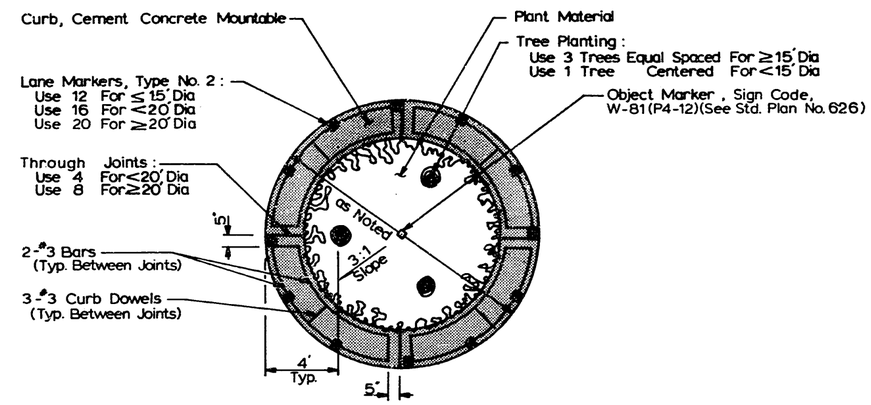

Typical Traffic Circle

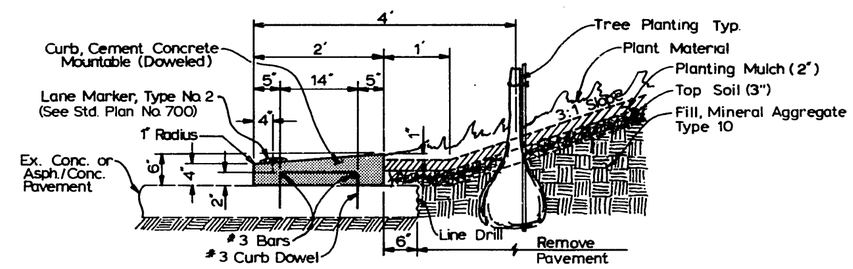

Typical Section

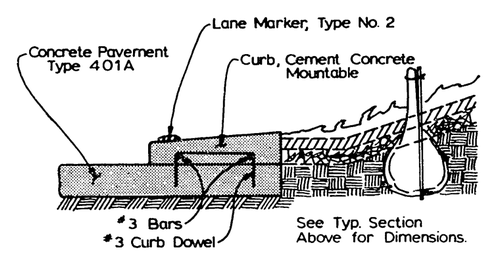

Typical Section

Ref. Std. Spec. Sec. 8-02.

Do Not Scale

APPROVED BY THE BOARD OF PUBLIC WORKS. 10/31, 1986 CHAIRMAN ATTEST: EXEC SECRETARY	CITY OF SEATTLE DEPARTMENT OF ENGINEERING	Traffic Circle Details

Standard Plan No. 420

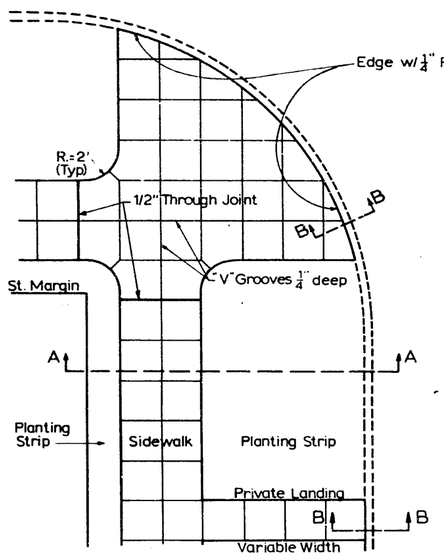

Type 420A

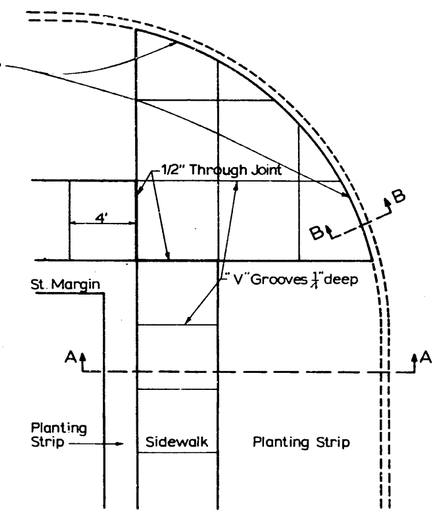

Type 420 B

When planting strip pavement is approved, joint material will be required at the perimeter of the planting strip pavement.

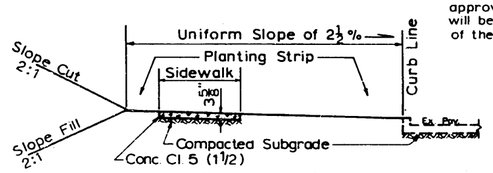

Section A-A

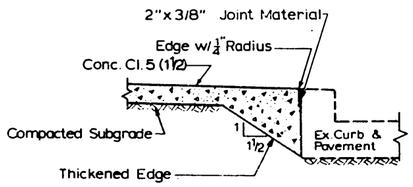

Section B-B

Do Not Scale

Ref. Std. Spec. Sec. 8-14.

APPROVED BY THE BOARD OF PUBLIC WORKS 10/31, 19 82 CHAIRMAN ATTEST: EXEC SECRETARY	CITY OF SEATTLE DEPARTMENT OF ENGINEERING	Concrete Sidewalk Details

Standard Plan No. 421

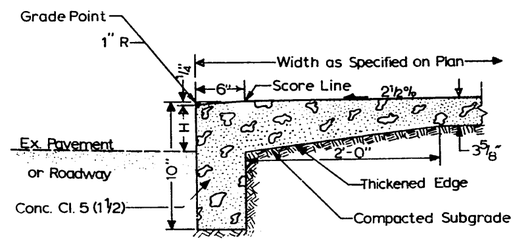

"H" Shall be 6" from finished grade unless otherwise specified.

Vertical Backface of Curb shall be formed against native earth where practical, otherwise by Backform left in place.

Ref. Std. Spec. Sec. 8-14.

Do Not Scale

APPROVED BY THE BOARD OF PUBLIC WORKS 10/31, 19 82 CHAIRMAN ATTEST: EXEC SECRETARY	CITY OF SEATTLE DEPARTMENT OF ENGINEERING	Sidewalk with Monolithic Curb

Standard Plan No. 422a

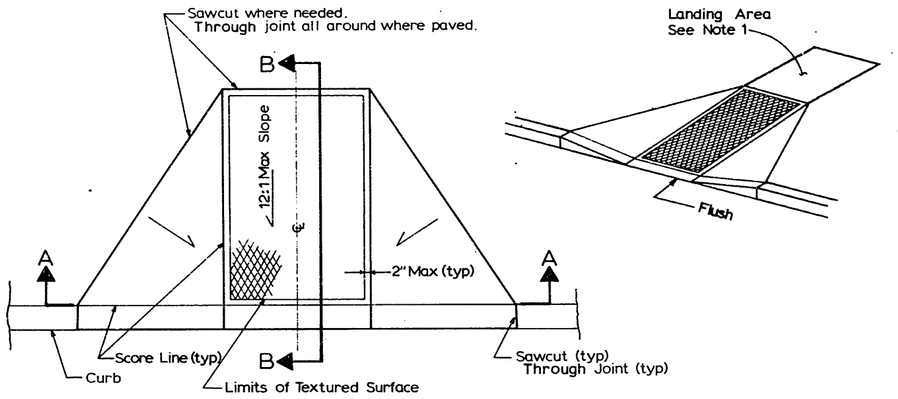

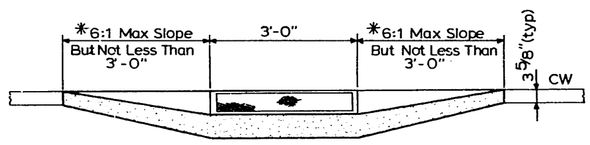

Section A-A

*For Federal or State funded projects, must use 10:1 Max Slope.

Notes:

1. Sidewalk paving in the planting strip shall be installed as necessary to make ramp accessible to CW landing and provide a flat landing area at the top of the ramp (3'x5' min).
2. Curb ramp shall not be poured integral with sidewalk or pavement and shall be isolated by through joint material on all sides, but not at end of ramp adjacent to roadway pavement.
3. Curb ramp shall not have color pigments added.
4. The center ramp section concrete shall have a coarse textured surface obtained by a 3/4" 9-11 flattened expanded metal mesh being pressed into the still fresh concrete. The long axis of the diamond pattern shall be perpendicular to the curb. The triangular wing sections shall have a slightly brushed finish, parallel to the curb.
5. Minimum distance between adjacent curb ramps shall be 6 feet.
6. Inlets shall be so located that runoff does not flow past the curb ramp.
7. Minimum lateral clearance from inlets, poles, hydrants and other above ground obstacles shall be 1 foot to the scored portion of the ramp.
8. For additional requirements and conditions refer to Seattle Board of Public Works Curb Ramp Placement Policy adopted June 25, 1980 and Standard Plan No. 422b.

Ref. Std. Spec. Sec. 8-14

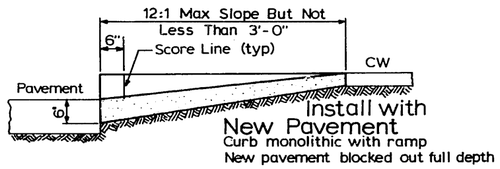

Section B-B

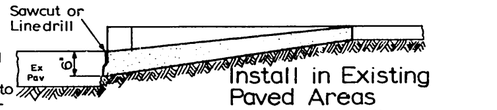

Section B-B

APPROVED BY THE BOARD OF PUBLIC WORKS 10/31, 1980 CHAIRMAN ATTEST: EXEC SECRETARY	CITY OF SEATTLE DEPARTMENT OF ENGINEERING	Curb Ramp Construction Detail

Standard Plan No. 422b

Typical Curb Ramp Locations

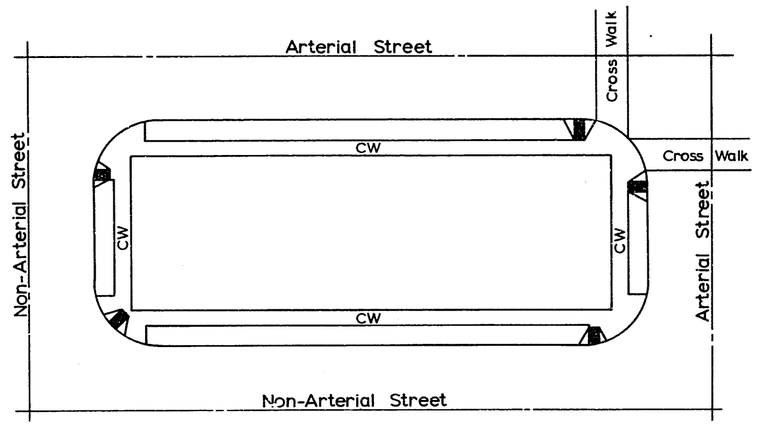

Curb Ramp Location Priorities

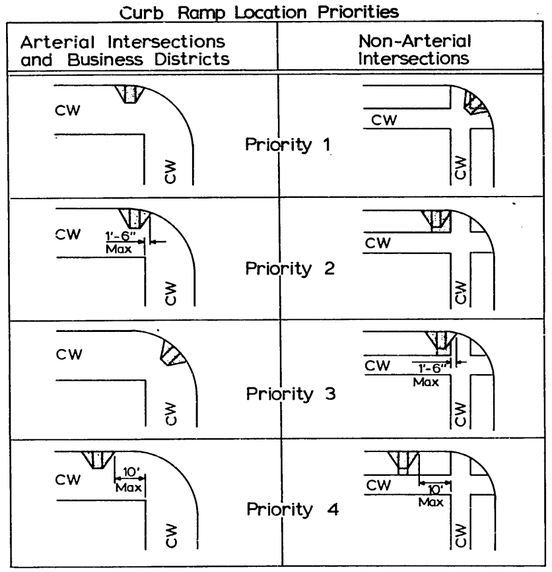

Notes:

1. All signalized intersections shall be treated as arterial-arterial.
2. Curb ramps shall be installed on the opposite side of the street from any ramp being constructed.
3. Curb shall be depressed for future curb ramps where curbs are installed with no sidewalks.
4. Designer/Installer shall locate ramp in priority 1 location. If not feasible, then an alternate location shall be chosen in descending order (75.1 BPW Policy).
5. For additional requirements and conditions refer to Seattle Board of Public Works Curb Ramp Placement Policy adopted June 25, 1980 and Standard Plan No. 422a.

Ref. Std. Spec. Sec. 8-14

APPROVED BY THE BOARD OF PUBLIC WORKS 10/31, 1980 CHAIRMAN ATTEST: EXEC SECRETARY	CITY OF SEATTLE DEPARTMENT OF ENGINEERING	Curb Ramp Location Details

Standard Plan No. 423

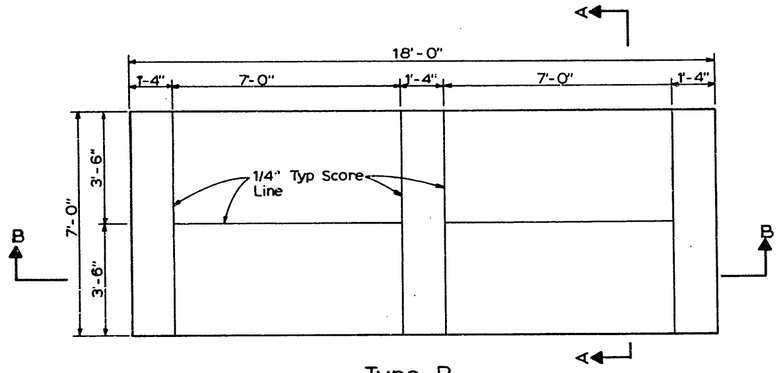

Type B

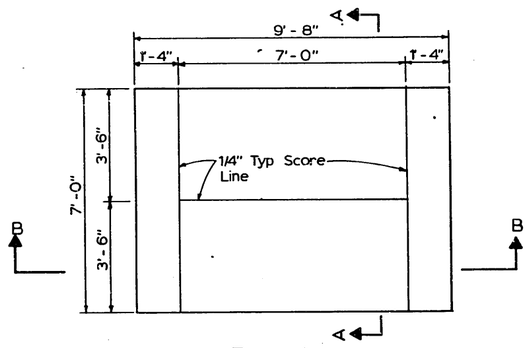

Type A

Note:
Concrete Shall be 3000 PSI Min @ 28 Days. Steel Trowel Surface w/ Broom Finish.

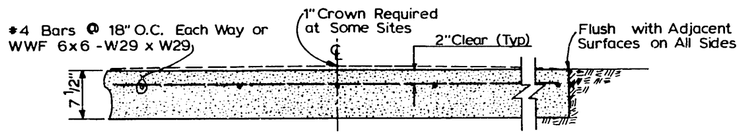

Section A-A

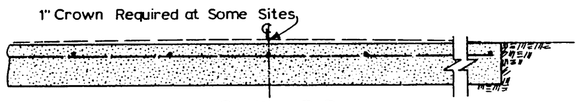

Section B-B

Ref. Std. Spec. Sec. 8-14

APPROVED BY THE BOARD OF PUBLIC WORKS 10/31, 1986 CHAIRMAN ATTEST: EXEC SECRETARY	CITY OF SEATTLE DEPARTMENT OF ENGINEERING	Bus Shelter Footing

Standard Plan No. 430

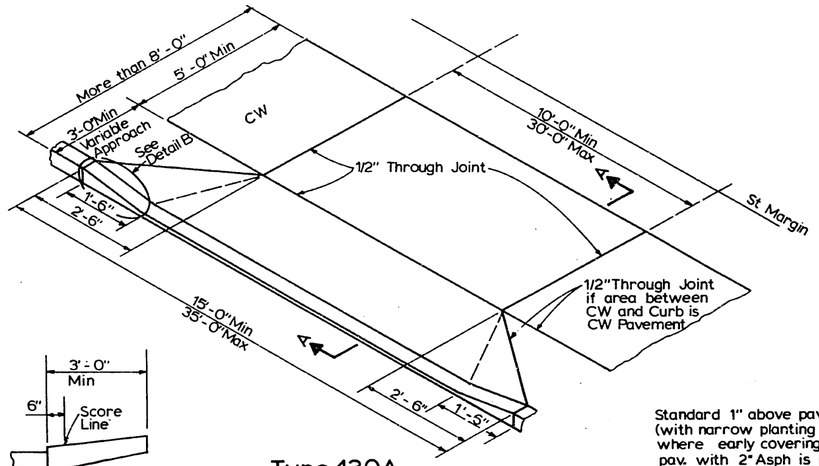

Type 430A

Detail A
Driveway with Monolithic Curb and Approach

Standard 1" above pavement (with narrow planting strip or where early covering of ex. pav. with 2" Asph is planned- Construct 2" above pav.)

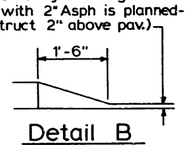

Detail B

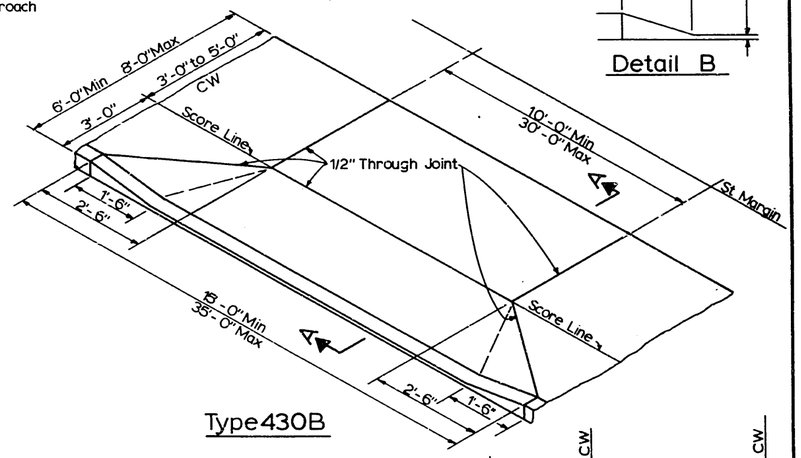

Type 430B

Note:
1. Concrete shall be C16 (1 1/2) or C16 (3/4) at Contractor's option.

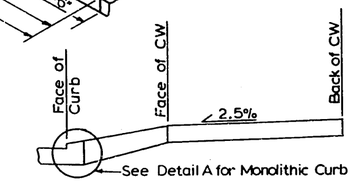

Section A-A

Ref. Std. Spec. Sec. 8-19

APPROVED BY THE BOARD OF PUBLIC WORKS 10/31, 1986 CHAIRMAN ATTEST: EXEC SECRETARY	CITY OF SEATTLE DEPARTMENT OF ENGINEERING	Type 430 Driveway

Standard Plan No. 431

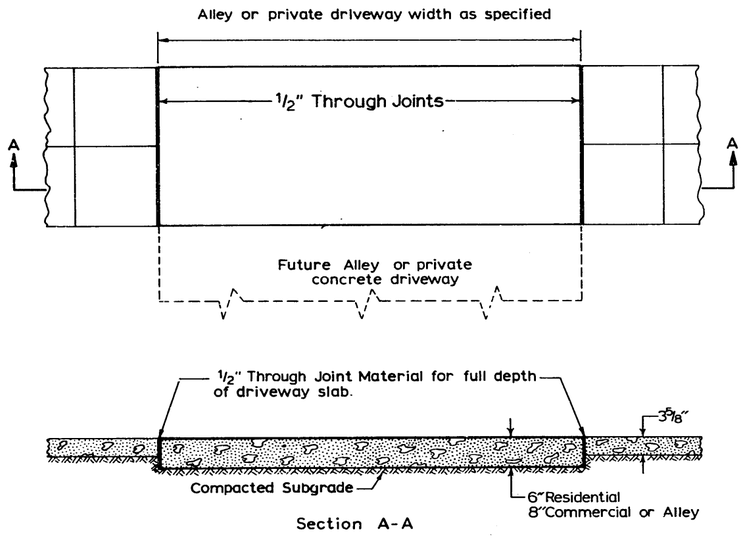

Driveway width greater than 16' shall have Transverse Contraction Joint at its center.

Concrete shall be Class 6(3/4) or Cl. 6(1 1/2) at contractor's option.

Ref. Std. Spec. Sec. 8-19

Do Not Scale

APPROVED BY THE BOARD OF PUBLIC WORKS 10/31, 1986 CHAIRMAN ATTEST: EXEC SECRETARY	CITY OF SEATTLE DEPARTMENT OF ENGINEERING	Concrete Driveway Placed With Sidewalk Construction

Standard Plan No. 440

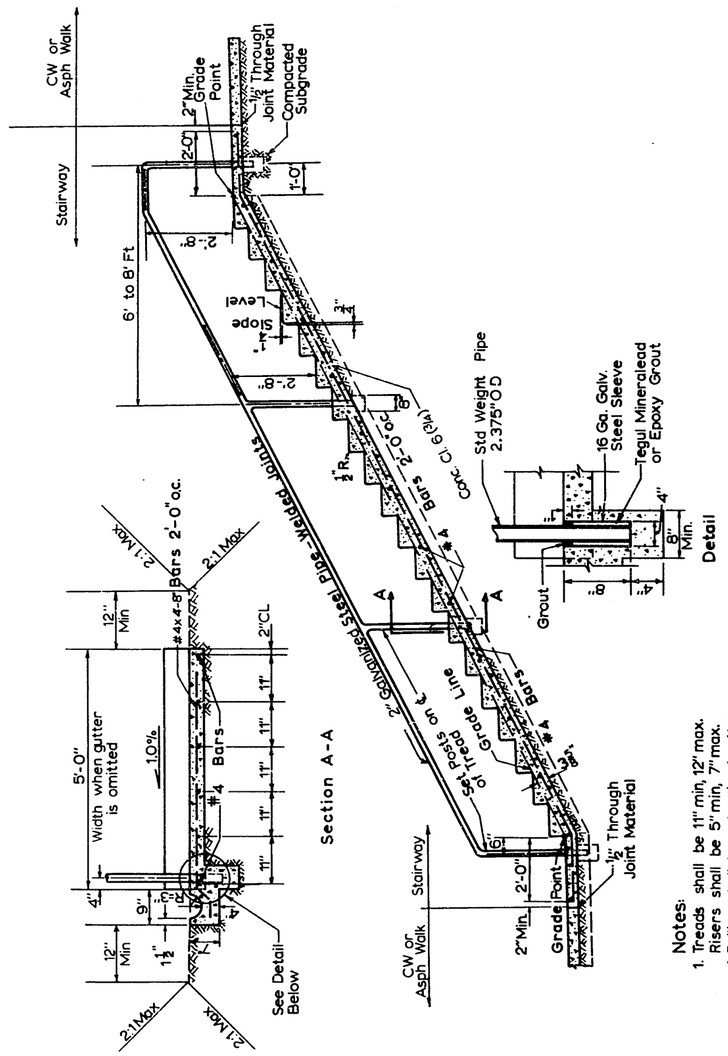

Ref. Std. Spec. Sec. 8-18

Do Not Scale

APPROVED BY THE BOARD OF PUBLIC WORKS 10/31, 1986 CHAIRMAN ATTEST: EXEC SECRETARY	CITY OF SEATTLE DEPARTMENT OF ENGINEERING	Cement Concrete Stairway and Handrail

Standard Plan No. 441

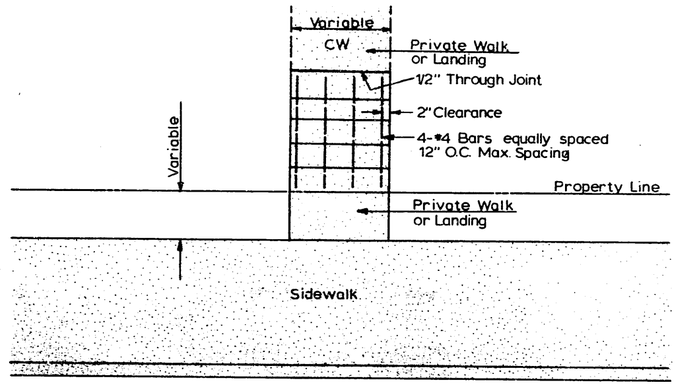

PLAN

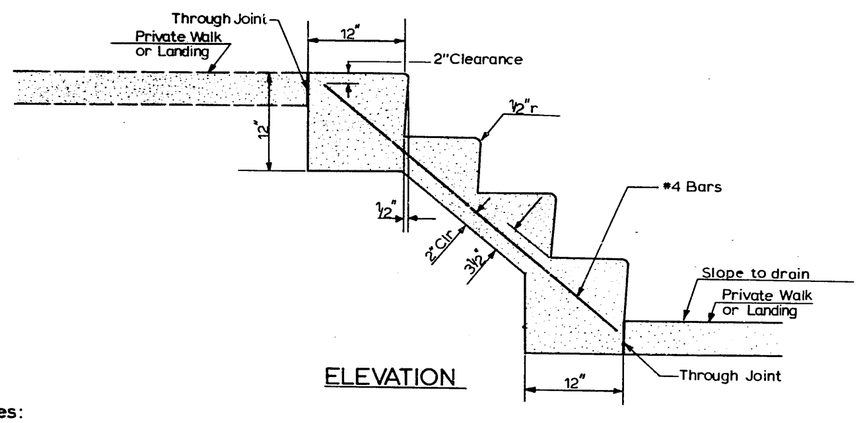

ELEVATION

Notes:

1. Cement concrete shall be class 6 (3/4) trowel finish.
2. Number of steps shall suit individual conditions, with tread and riser dimensions as follows:
   Treads shall be 11" Min - 12" Max.
   Risers shall be 5" Min - 7" Max.
3. Step width shall match width of existing walk, but shall be no less than 30" wide.
4. Steps with more than 4 risers must include handrail. See Standard Plan No 440.
5. Reinforcing steel, ASTM A615, GR. 60.

Ref. Std. Spec. Sec. 8-18

Do Not Scale

APPROVED BY THE BOARD OF PUBLIC WORKS 10/31, 19 86 CHAIRMAN ATTEST: EXEC SECRETARY	CITY OF SEATTLE DEPARTMENT OF ENGINEERING	Cement Concrete Steps

Standard Plan No. 442

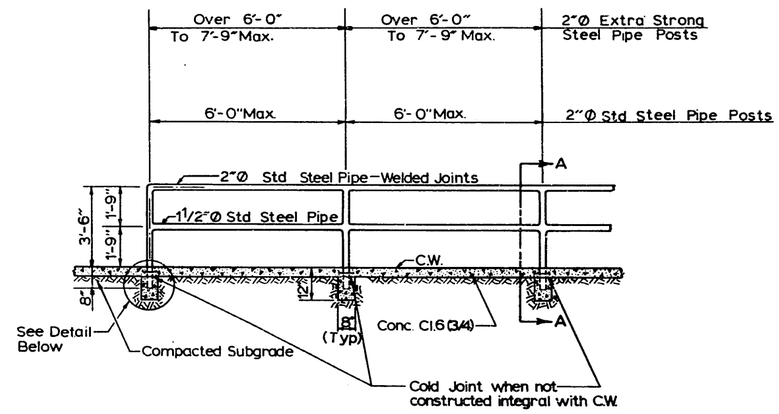

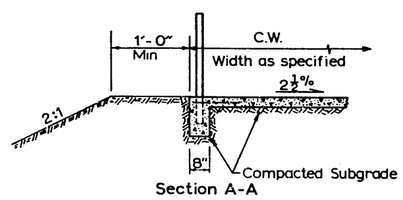

Section A-A

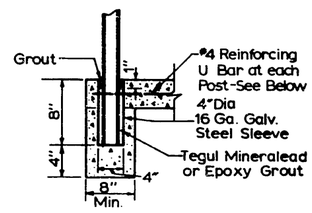

Detail

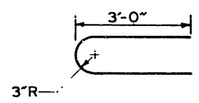

Notes:

1. Railing shall be Hot Dip Galvanized after Fabrication.
2. All Posts shall be Plumb and Rails Parallel to Grade.
3. Pipe Material shall Conform to ASTM A53.
4. Reinforcing Steel ASTM A615, Grade 60

Ref. Std. Spec. Sec. 8-18.

Do Not Scale

APPROVED BY THE BOARD OF PUBLIC WORKS 10/31, 19 86 CHAIRMAN ATTEST: EXEC SECRETARY	CITY OF SEATTLE DEPARTMENT OF ENGINEERING	Steel Pipe Handrail

Standard Plan No. 443

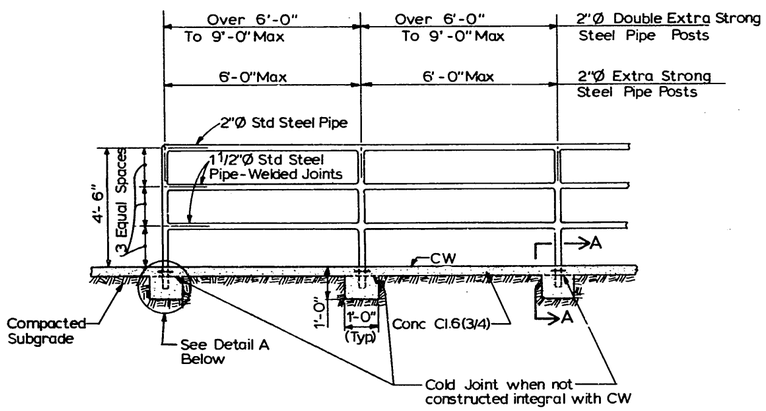

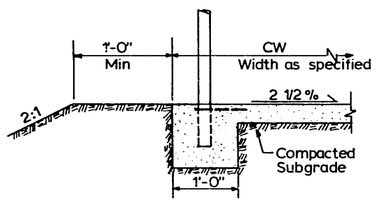

Section A-A

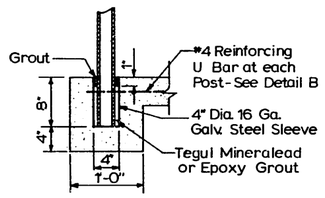

Detail A

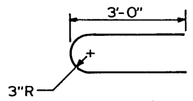

Detail B

Notes:

1. Railing shall be Hot Dip Galvanized after Fabrication.
2. All Posts shall be Plumb and Rails Parallel to Grade.
3. Pipe Material shall Conform to ASTM A53.
4. Reinforcing steel, ASTM A615, GR. 60.

Ref. Std. Spec. Sec. 8-18

Do Not Scale

APPROVED BY THE BOARD OF PUBLIC WORKS 10/31 19 86 CHAIRMAN ATTEST: EXEC SECRETARY	CITY OF SEATTLE DEPARTMENT OF ENGINEERING	Steel Pipe Railing For Bike Path

Standard Plan No. 450a

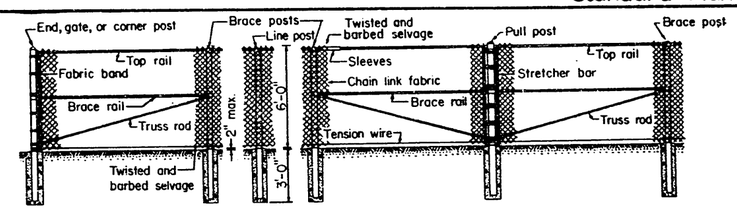

CHAIN LINK FENCE TYPE 1

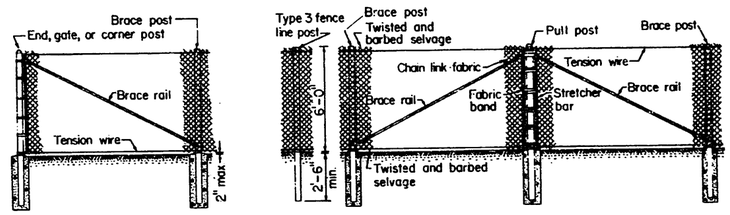

CHAIN LINK FENCE TYPE 3

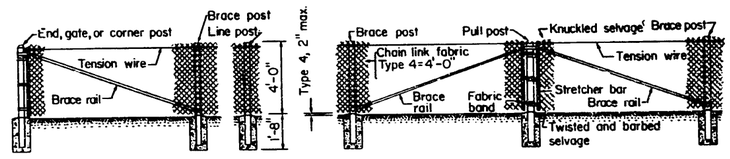

CHAIN LINK FENCE TYPE 4

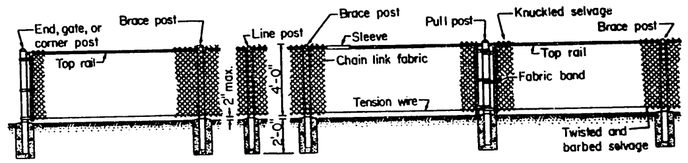

CHAIN LINK FENCE TYPE 6

Ref Std Spec Sec 8-12

APPROVED BY THE BOARD OF PUBLIC WORKS 10/31 19 86 CHAIRMAN ATTEST: EXEC SECRETARY	CITY OF SEATTLE DEPARTMENT OF ENGINEERING	Chain Link Fence

Standard Plan No 450b

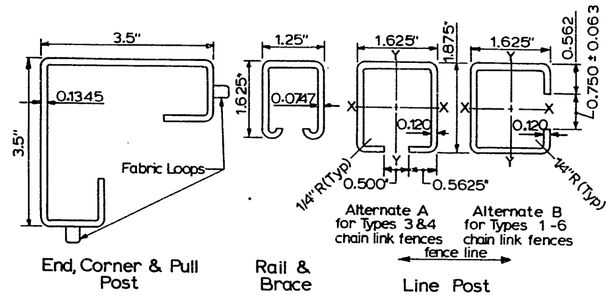

Roll Formed Sections

Type	Member											
	Brace Rail & Top Rail						Line & Brace Post					
	Round		H-Column		Roll Formed		Round		H-Column		Roll Formed	
	I.D. Pipe, Inches	Weight Per Ft, Pounds	Size, Inches	Weight Per Ft, Pounds	Size, Inches	Weight Per Ft, Pounds	I.D. Pipe, Inches	Weight Per Ft, Pounds	Size, Inches	Weight Per Ft, Pounds	Size, Inches	Weight Per Ft, Pounds
1	1 1/4	2.27	1.25 x 1.62	1.35	1 5/8 x 1 1/4	1.35	2	3.65	2 1/4	4.0		
3	1 1/4	2.27			1 5/8 x 1 1/4	1.35	1 1/2	2.72	1 7/8	2.72	1 5/8 x 1 7/8	2.34
4	1 1/4	2.27			1 5/8 x 1 1/4	1.35	1 1/2	2.72	1 7/8	2.72	1 5/8 x 1 7/8	2.34
6	1 1/4	2.27	1.25 x 1.62	1.35	1 5/8 x 1 1/4	1.35	2	3.65	2 1/4	4.0		

Type	Member						
	End, Corner & Pull Post				Gate Post		All Posts
	Round		Roll Formed		Round		
	I D Pipe, Inches	Weight Per Ft, Pounds	Size, Inches	Weight Per Ft, Pounds	I D Pipe, Inches	Weight Per Ft, Pounds	Length
1	2 1/2	5.79	3 1/2 x 3 1/2	5.14	3 1/2	9.1	8'-8"
3	2	3.65	3 1/2 x 3 1/2	5.14	3 1/2	9.1	8'-8"
4	2	3.65	3 1/2 x 3 1/2	5.14	3 1/2	9.1	5'-6"
6	2 1/2	5.79	3 1/2 x 3 1/2	5.14	3 1/2	9.1	5'-6"

Notes:

1. All concrete post bases shall be 10" minimum diameter, Class 5(1½)
2. Posts shall be spaced at 10' maximum intervals unless otherwise directed by the Engineer.
3. Top or bottom tension wires shall be placed within the limits of the first full fabric weave.
4. The illustrative details shown hereon shall not be construed as limiting to hardware design or post selection for any particular fence type.

Ref. Std. Spec. Sec. 8-12

APPROVED BY THE BOARD OF PUBLIC WORKS 10/31, 1986 CHAIRMAN ATTEST: EXEC SECRETARY	CITY OF SEATTLE DEPARTMENT OF ENGINEERING	Chain Link Fence

Standard Plan No. 450c

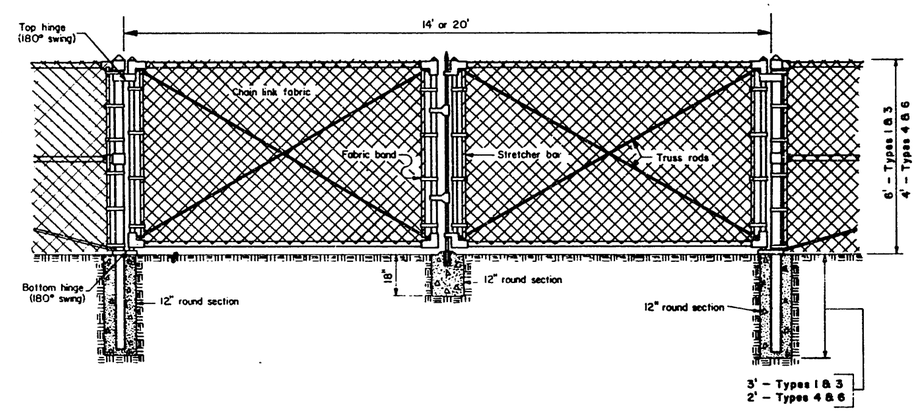

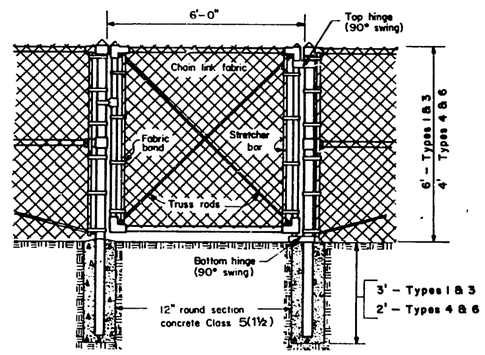

Notes:

1. Fence fabric shall be secured to gate frames with knuckled selvage along top edge for Types 4 & 6 chain link fence installations.
2. Minimum post length:
   Types 1 & 3 - 8'-8"
   Types 4 & 6 - 5'-6"

Ref. Std. Spec. Sec. 8-12

APPROVED BY THE BOARD OF PUBLIC WORKS 10/31, 1986 CHAIRMAN ATTEST: EXEC SECRETARY	CITY OF SEATTLE DEPARTMENT OF ENGINEERING	Chain Link Gates

Standard Plan No. 460

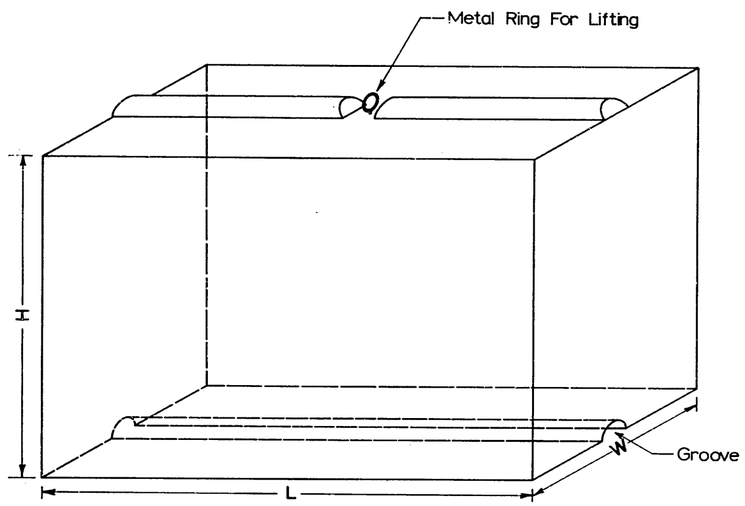

Concrete Tongue and Groove Block

Note:

	H	L	W
Sizes Are :	2'-0" x	3'-0" x	2'-0"
Or	2'-0" x	6'-0" x	2'-0"

APPROVED BY THE BOARD OF PUBLIC WORKS 10/1, 19 86 CHAIRMAN ATTEST: EXEC SECRETARY	CITY OF SEATTLE DEPARTMENT OF ENGINEERING	Ecology Block, Concrete

Standard Plan No. 500

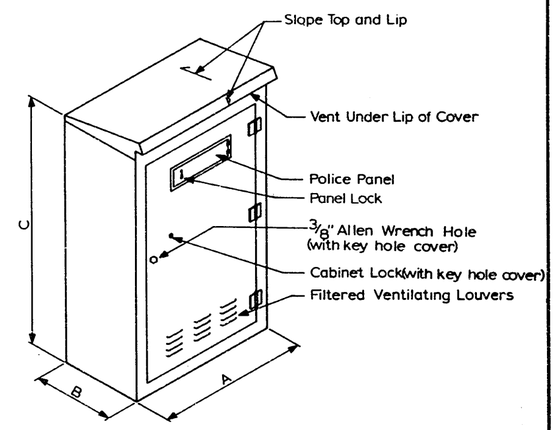

Type III Cabinet

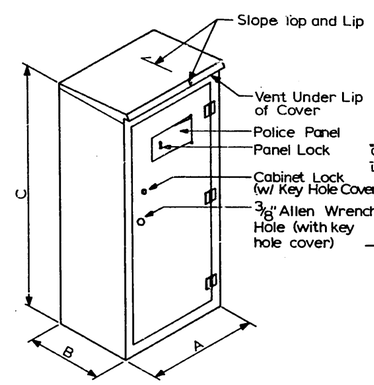

Type I & II Cabinets

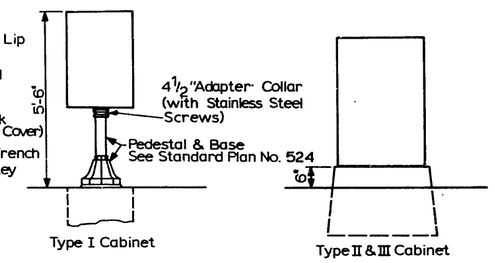

Mounting Detail

Cabinet Dimension

Nominal Dimension	Type I	Type II	Type III
A	18" to 24"	28" to 34"	36" to 46"
B	12" to 18"	16" to 20"	20" to 28"
C	26" to 40"	38" to 52"	50" to 58"

Notes:

Place door on sidewalk side of cabinet.

Shelves shall be provided for all equipment.

For foundations see Standard Plan No. 540

Cabinets are shown diagramatically. Actual appearance may differ according to Manufacturer.

Seal cabinet to foundation with silicon to prevent moisture from entering the cabinet. The enclosure shall be NEMA 3R labeled.

Ref. Std. Spec. Sec. 8-31

APPROVED BY THE BOARD OF PUBLIC WORKS 10/31, 19 86 CHAIRMAN ATTEST: EXEC SECRETARY	CITY OF SEATTLE DEPARTMENT OF ENGINEERING	Signal Controller Cabinet

Standard Plan No. 501

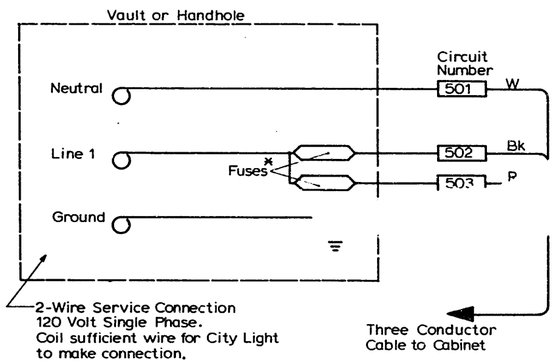

Vault or Handhole Service Connection

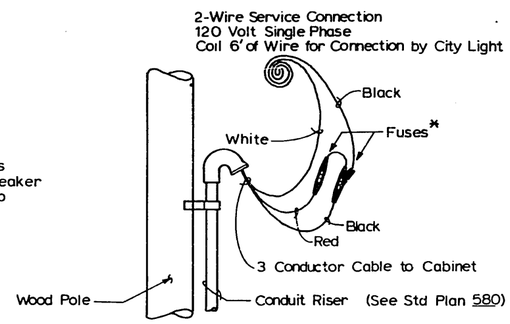

* Whenever Five or More Vehicle Phases are Provided, The Primary Circuit Breaker Shall be 45 amps. Otherwise 30 amp Circuit Breakers Shall be Used.

Signal Overhead Service Connection

Ref. Std. Spec. Sec. 8-31

APPROVED BY THE BOARD OF PUBLIC WORKS 10/31, 1987 CHAIRMAN ATTEST: EXEC SECRETARY	CITY OF SEATTLE DEPARTMENT OF ENGINEERING	Signal Controller Service Connection

Standard Plan No. 510

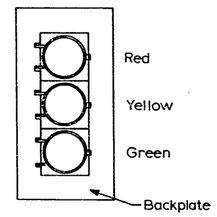

Typical Signal Face

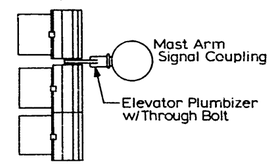

Mast Arm Mounting

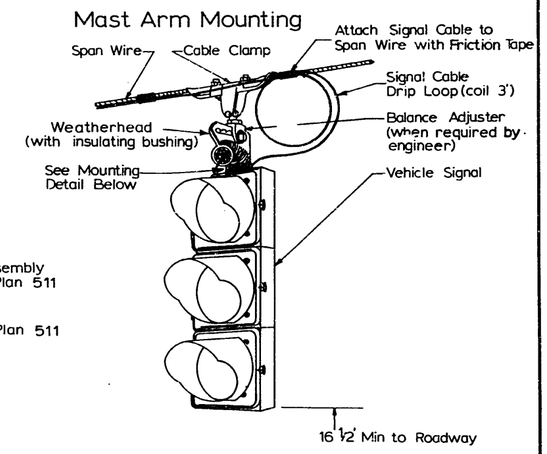

Spanwire Mounting

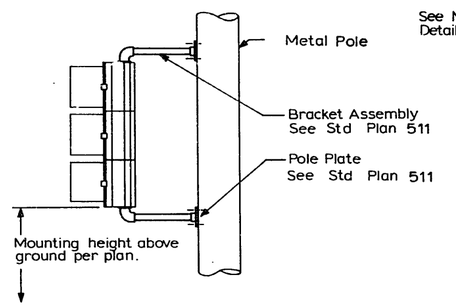

Bracket Mounting

Note

Backplates have been omitted from various views for clarity.

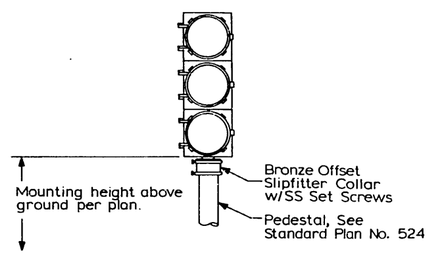

Pedestal Top Mounting

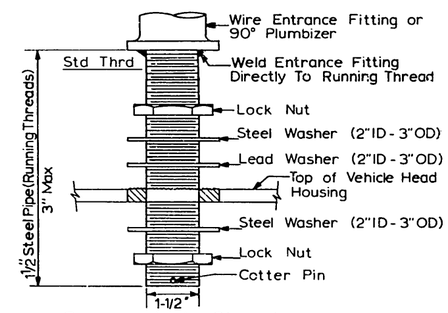

Suspended Signal Mounting Detail

Ref. Std. Spec. Sec. 8-31

APPROVED BY THE BOARD OF PUBLIC WORKS 10/31, 1987 CHAIRMAN ATTEST: EXEC SECRETARY	CITY OF SEATTLE DEPARTMENT OF ENGINEERING	Vehicular Signal Mounting

Standard Plan No. 511

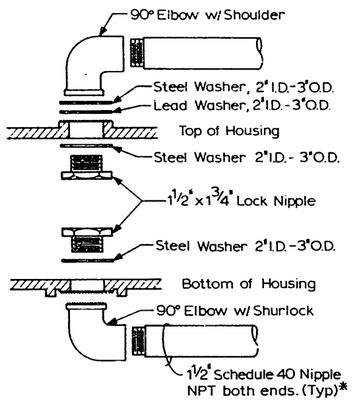

Bracket Assembly

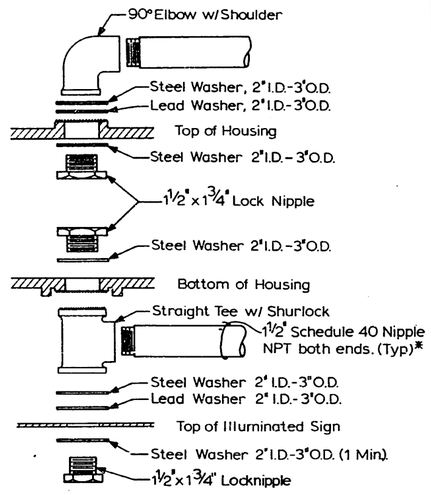

Bracket Assembly with Illuminated Sign Mounted Below Signal

* For Bracket Assembly Details:

11" Long for 8" vehicle signals
14" Long for 12" vehicle signals and pedestrian signals

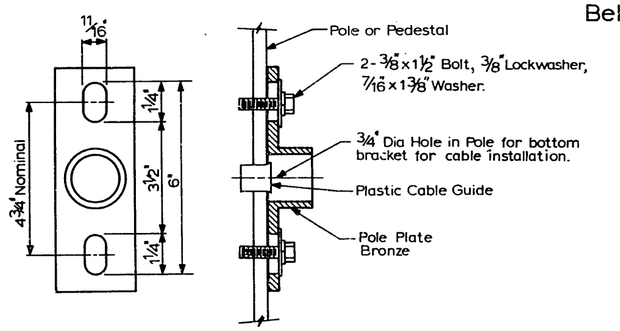

1 All Bolts and washers shall be stainless steel.
2. Mounting of pole plates shall be as follows:

On metal poles thinner than 7 gauge, use 3/8" stainless steel rivnuts.

On metal poles 7 gauge or thicker, drill and tap for 3/8" bolt (SS rivnuts optional)

On poles filled with or made of concrete, use 3/8" x 2½" min stud bolt anchors, sleeve type.

Pole Plate Mounting Bracket Installation

Ref. Std. Spec. Sec. 8-31

APPROVED BY THE BOARD OF PUBLIC WORKS 10/31, 1986 CHAIRMAN ATTEST: EXEC SECRETARY	CITY OF SEATTLE DEPARTMENT OF ENGINEERING	Bracket Assemblies

Standard Plan No. 520

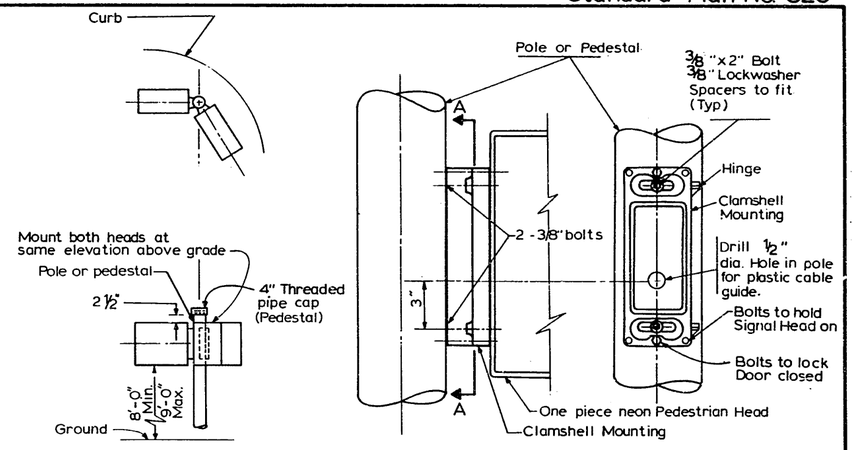

Elevation Sec A-A

Metal Pole Mount

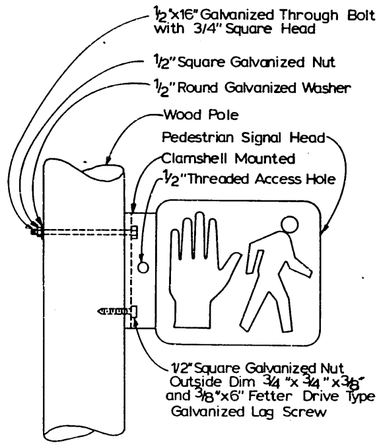

Wood Pole Mount

Notes

1. Bolts and washers shall be stainless steel.
2. Mounting shall be as follows:

On metal poles thinner than 7 gauge, use 3/8" stainless steel rivnuts.

On metal poles 7 gauge or thicker, drill and tap for 3/8" bolt. (Stainless steel rivnuts optional)

On poles filled with or made from concrete use 3/8" x 2½" stud bolt anchors with hex nut.

3 Bottom of pedestrian signal housing shall be 8' above sidewalk grade.

Ref. Std. Spec. Sec. 8-31

Do Not Scale

APPROVED BY THE BOARD OF PUBLIC WORKS 10/31, 1986 CHAIRMAN ATTEST: EXEC SECRETARY	CITY OF SEATTLE DEPARTMENT OF ENGINEERING	Pedestrian Signal Clamshell Mounting

Standard Plan No. 521

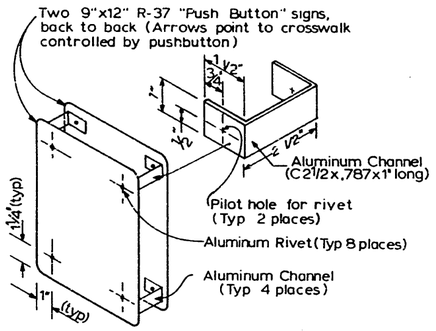

Pushbutton Sign Assembly Detail

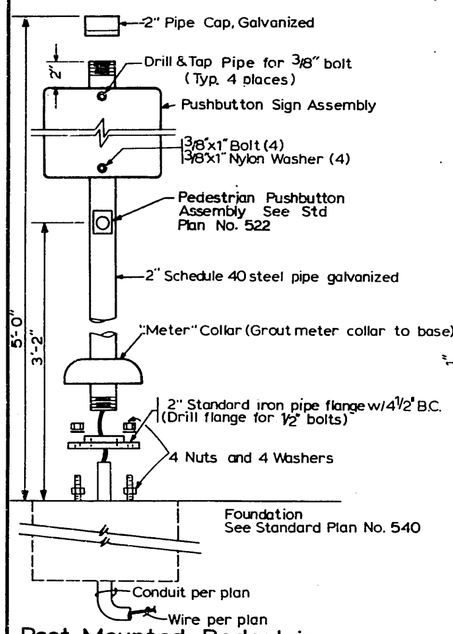

Post Mounted Pedestrian Pushbutton & Sign

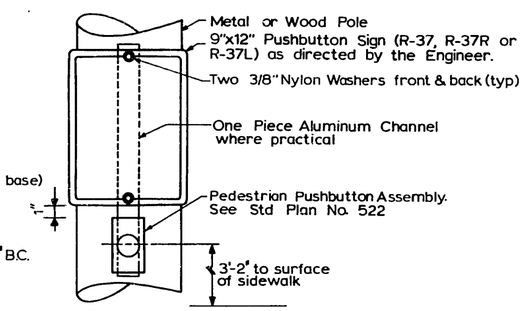

Pedestrian Pushbutton & Sign Assembly

Notes: 1. Bolts, nuts, and steel washers shall be stainless steel.
2. Mounting of pushbutton and sign shall be as follows:
For metal poles 7 gauge or larger; drill and tap for 3/8" bolt. Rivnuts optional.
For metal poles smaller than 7 gauge use 3/8" steel rivnuts.
For wood poles use 3/8"x4" galvanized lag screws.

Ref. Std. Spec. Sec. 8-31

APPROVED BY THE BOARD OF PUBLIC WORKS 10/21, 19[illegible] CHAIRMAN ATTEST: [illegible] EXEC SECRETARY	CITY OF SEATTLE DEPARTMENT OF ENGINEERING	Pedestrian Pushbutton

Standard Plan No. 522

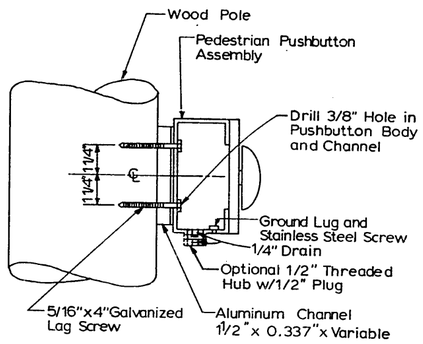

Wood Pole Mount Elevation View

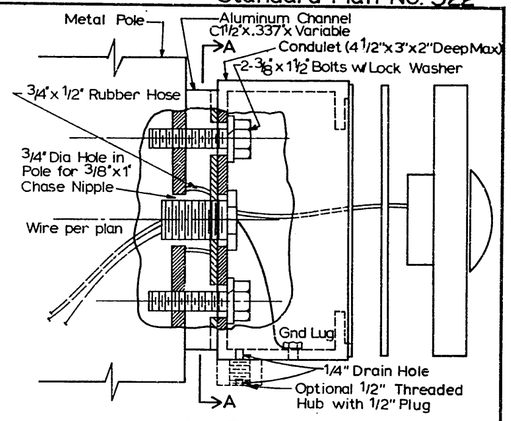

Metal Pole Mount Elevation View

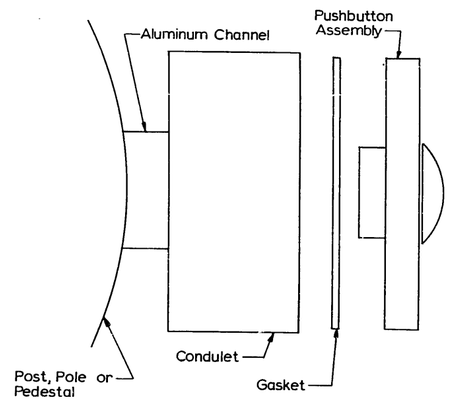

Typical Plan View

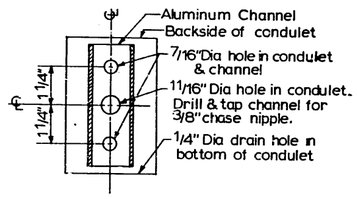

Section A-A

Ref. Std Spec. Sec. 8-31

APPROVED BY THE BOARD OF PUBLIC WORKS 12/21, 19[illegible] CHAIRMAN ATTEST: [illegible] EXEC SECRETARY	CITY OF SEATTLE DEPARTMENT OF ENGINEERING	Pedestrian Pushbutton Assembly Installation

Standard Plan No. 523

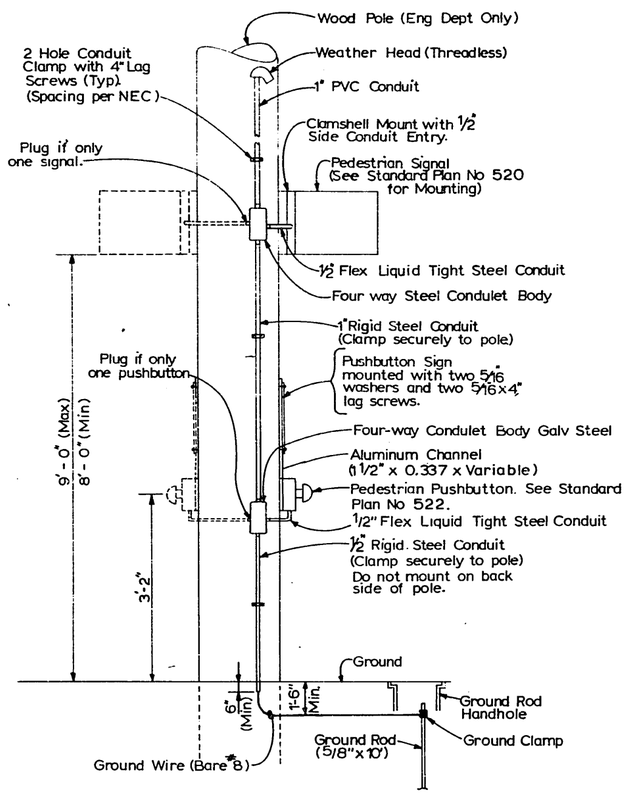

Notes:

1. Ground all pedestrian signals and pushbuttons with a bare #8 copper wire.
2. All steel hardware shall be hot dipped galv. or stainless steel unless otherwise specified.
3. The aluminum channel shall extend to include the pushbutton sign when both are mounted on the same side.

Ref. Std. Spec. Sec. 8-31.

APPROVED BY THE BOARD OF PUBLIC WORKS 10/31/1986 CHAIRMAN ATTEST: EXEC SECRETARY	CITY OF SEATTLE DEPARTMENT OF ENGINEERING	Pedestrian Signal & Pushbutton Mounted on Wood Pole

Standard Plan No. 524

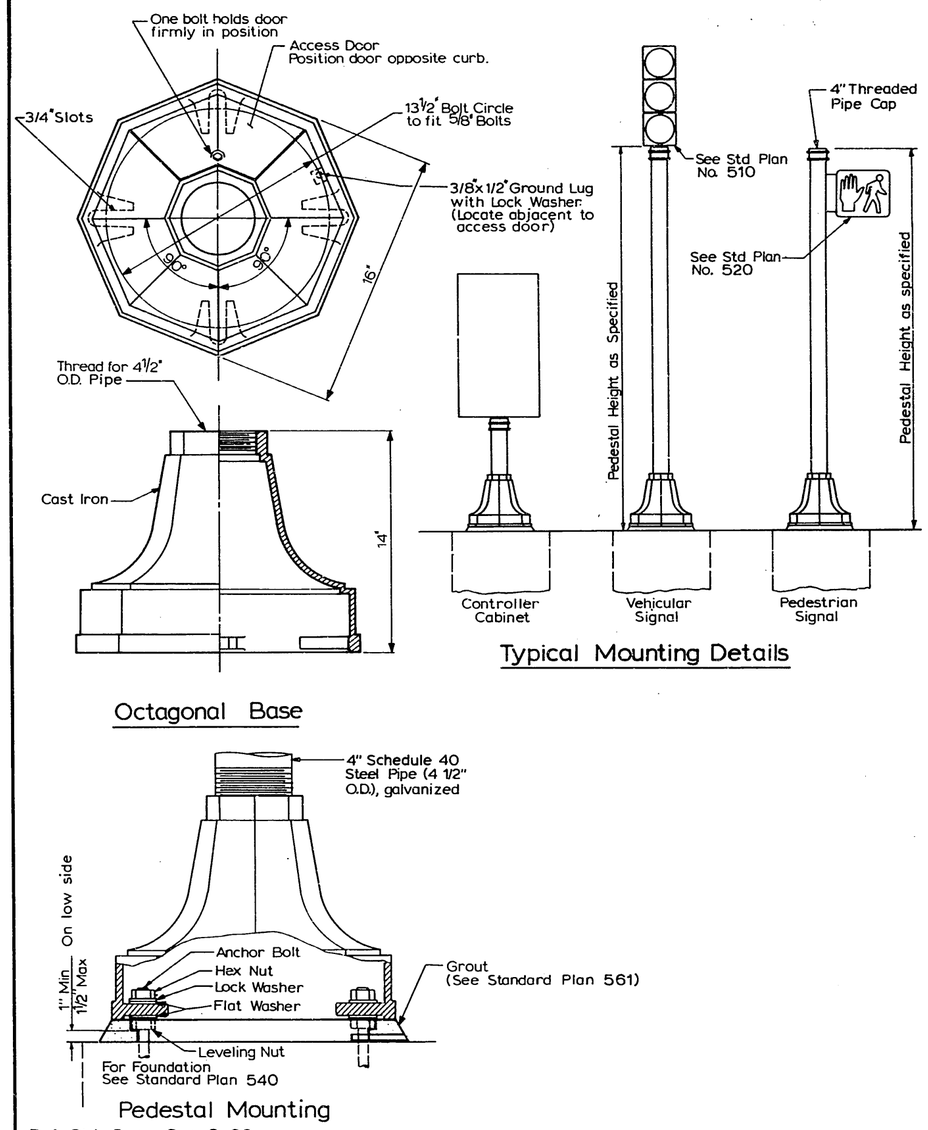

Ref. Std. Spec. Sec. 8-32

APPROVED BY THE BOARD OF PUBLIC WORKS 10/31/1986 CHAIRMAN ATTEST: EXEC SECRETARY	CITY OF SEATTLE DEPARTMENT OF ENGINEERING	Octagonal Pedestal

Standard Plan No. 530a

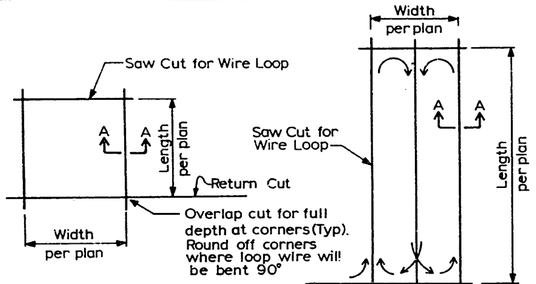

Dipole Loop Detector

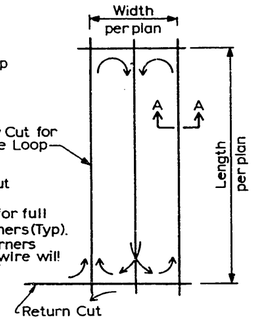

Quadrapole Loop Detector

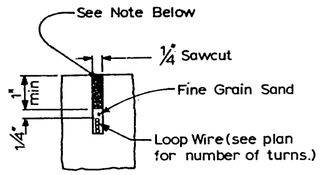

Section A-A

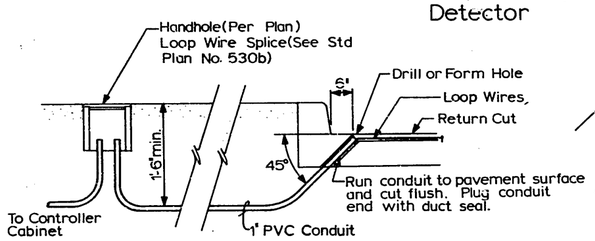

Curb / Pavement Entrance For Detector Loop Wires

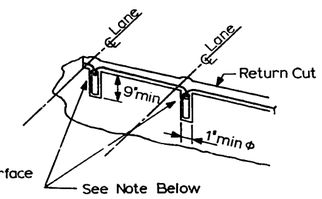

Magnetometer Detector

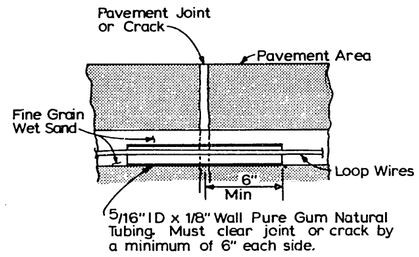

Note:
1. Cut a 1/2" wide slot 6" long on each side of joint or crack
2. Wrap ends and entire length of tubing with two layers of electrical tape to prevent asphalt or concrete from entering the tubing.

Pavement Joint or Crack Detail

Notes:

1 Fill cut after vertical placement and testing with hot paving grade liquid asphalt ASTM D 312 Type III or high strength highway concrete as specified.

2 Sharp edge tools shall not be used in placing conductors in saw cuts.

3 Each pair of loop wires in the return cut shall be twisted a minimum of 3 turns per foot and may share common return cuts with other twisted pairs.

4 Tape loop wire a minimum of 2 turns at each corner

5 Remove sharp corner edges in saw cuts where loop wire will be bent around.

6 Perform resistance and continuity tests prior to sealing loop wires.

7 Coil 5' of loop wire in handhole.

Ref. Std. Spec. Sec. 8-31

Do Not Scale

APPROVED BY THE BOARD OF PUBLIC WORKS 10/31, 1986 CHAIRMAN ATTEST: EXEC SECRETARY	CITY OF SEATTLE DEPARTMENT OF ENGINEERING	Loop Detectors

Standard Plan No. 530b

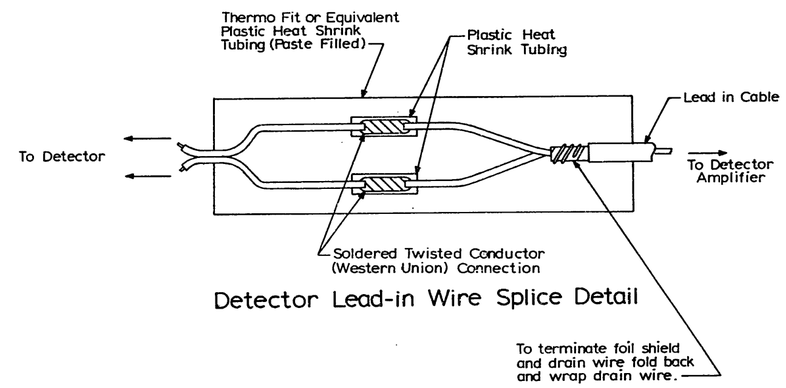

Detector Lead-in Wire Splice Detail

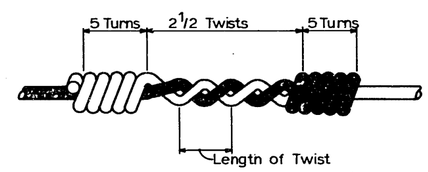

CAUTION: Be Sure Both Wires Are Twisted Equally

Twisted Conductor Splice

Ref. Std. Spec. Sec. 8-31

No Scale

APPROVED BY THE BOARD OF PUBLIC WORKS 10/31, 1986 CHAIRMAN ATTEST: EXEC SECRETARY	CITY OF SEATTLE DEPARTMENT OF ENGINEERING	Detector Loop Wire Splice

Standard Plan No. 540

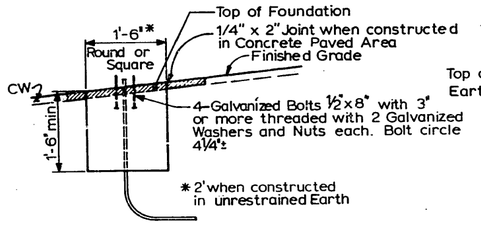

Pedestrian Pushbutton Post

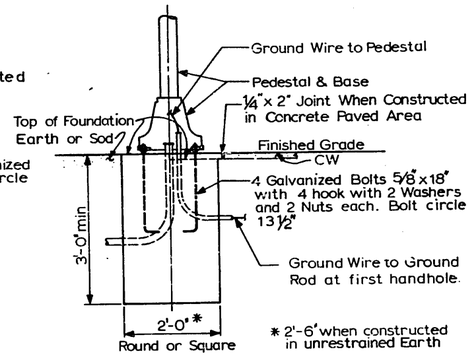

Pedestal

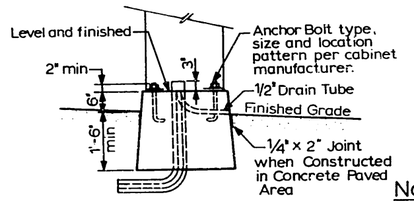

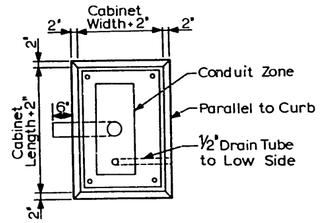

Signal Controller Cabinet (Type II & III)

Notes:

Grout per grouting detail.

Size and number of conduit per plan.

Bolt circles to be ±1/8" dia. with bolts equally spaced ±1/8" around circle.

Conduit shall extend 3" above foundation.

Conduit shall enter into conduit zone as indicated by manufacturer's template or cabinet detail.

Wrap top of anchor bolts with corrosion protection tape per special provisions.

For Steel Pole Foundations, See Standard Plan No. 541

Ref. Std. Spec. Sec. 8-32

APPROVED BY THE BOARD OF PUBLIC WORKS 10/31, 19[illegible] CHAIRMAN ATTEST: [illegible] EXEC SECRETARY	CITY OF SEATTLE DEPARTMENT OF ENGINEERING	Signal & Pedestal Foundations

Standard Plan No. 541

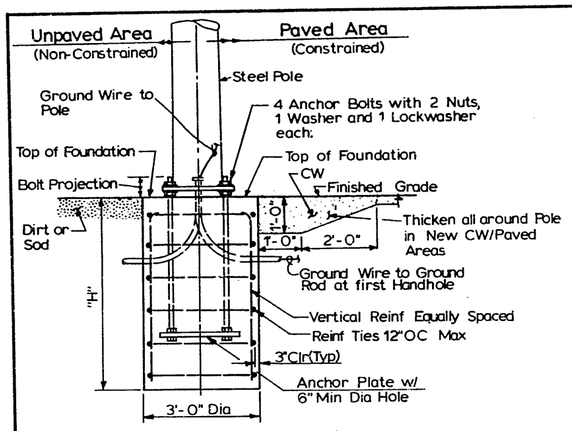

Foundation Details for Steel Pole

Dimension "H" - See Graph Below

Reinf (ASTM) - A615 GR 60

Reinf (Ties) - #4 with 1'-0" Lap

Reinf (Verticals) - 8 Bars Min-Size as required for Moment

Concrete Cl AX f'_c - 4,000 psi

Steel Pole Foundation

Class of Materials	Lateral Bearing Lbs/Sq Ft/Ft of Depth Below Natural Grade
Sedimentary and Foliated Rock	400
Sandy Gravel and/or Gravel (GW and GP)	200
Sand, Silty Sand, Clayey Sand, Silty Gravel and Clayey Gravel (SW, SP, SM, SC, GM and GC)	150
Clay, Sandy Clay, Silty Clay and Clayey Silt (CL, ML, MH and CH)	100

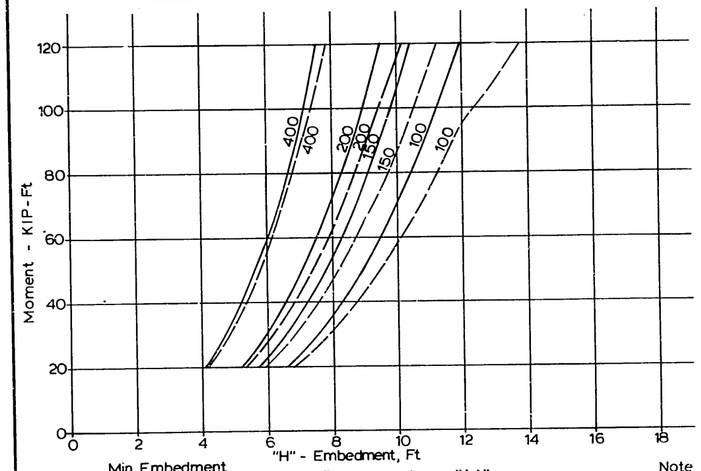

Dimension "H"

LEGEND

Constrained Pole

Non Constrained Pole

400 Soil Lateral Resistance in Lbs/Sq. Ft/Ft. Depth

Note Depths for Non Constrained Poles assumes 12" Motion allowed at ground surface

Ref. Std. Spec. Sec. 8-32

APPROVED BY THE BOARD OF PUBLIC WORKS 10/31, 19[illegible] CHAIRMAN ATTEST: [illegible] EXEC SECRETARY	CITY OF SEATTLE DEPARTMENT OF ENGINEERING	Foundations

Standard Plan No. 542

Type A[1]

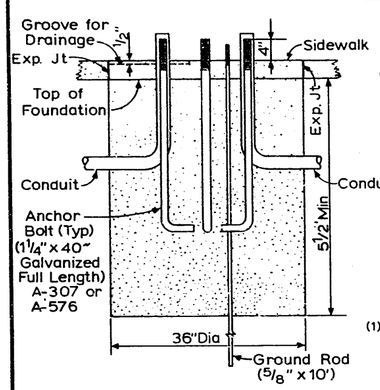

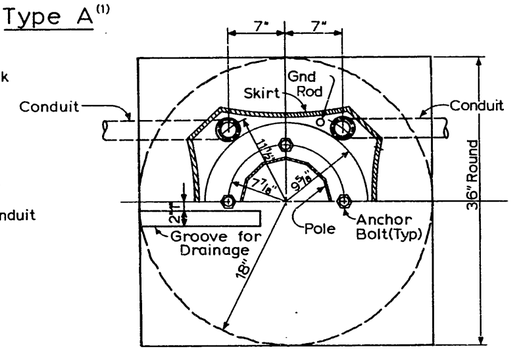

[1] Note:
Bolts must be Diamond Shape to Curb. Conduit and Ground Rod are Outside Bolt Circle.

Type B[2]

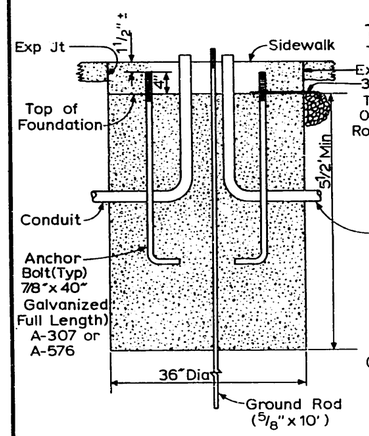

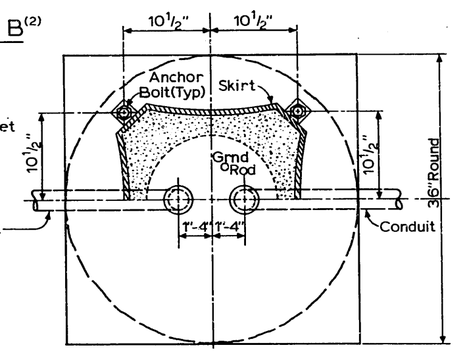

[2] Note:
To be used for Concrete Filled Pole. Bolts are Parallel to Curb. Conduit and Ground Rod are inside Bolt Circle.

Notes:

1. For Type "A" Foundations align the Bronze Base Access Cover on the same side with The Pole Handhole, Conduits and the Ground Rod.
2. Tape Top of Anchor Bolts with Corrosion Protection Tape per Specs.
3. For Type "A" Poles, The top 3 1/2" shall be formed into a Square and poured prior to setting Poles.
4. For Type "B" Poles, The top 5 1/2" shall be formed into a Square and Poured after setting the Pole.

Ref Std Spec Sec 8-32

APPROVED BY THE BOARD OF PUBLIC WORKS 10/31, 19[illegible] CHAIRMAN ATTEST: [illegible] EXEC SECRETARY	CITY OF SEATTLE DEPARTMENT OF ENGINEERING	Chief Seattle Ornamental Street Light Foundation

Standard Plan No. 543

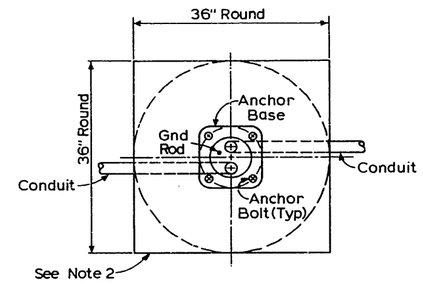

Plan

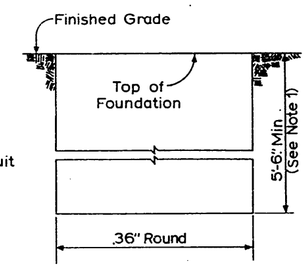

In Earth (Type B)

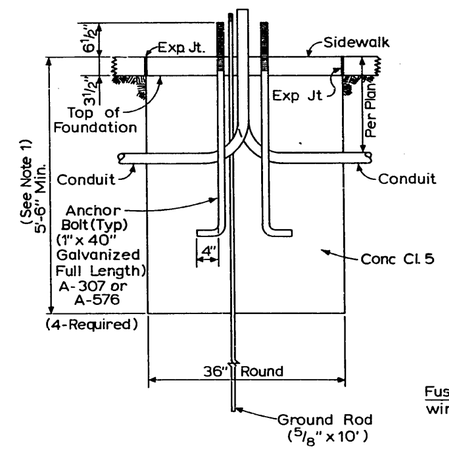

In or Adjacent to Sidewalk
(Type A)

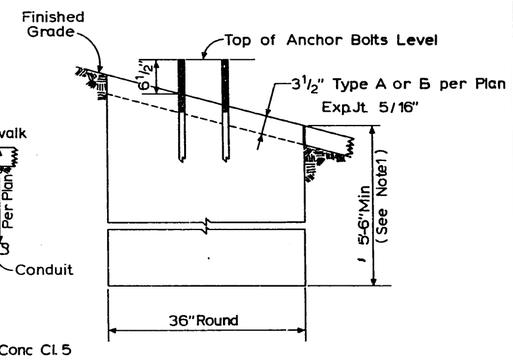

On an Incline

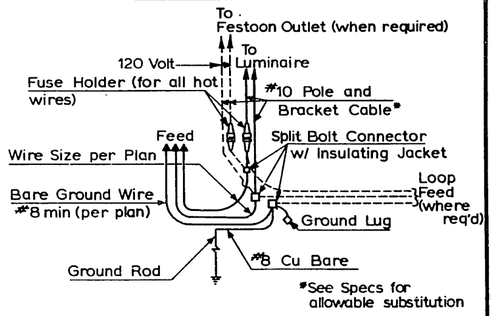

Underground Fed Street
Lighting Pole Wiring

Notes:

1. 6' Where located on fill or where slope is 3:1 or steeper.
2. Top 3 1/2" to be formed into a square and Poured separately in Type A and in one piece in Type B.
3. Bolt Circle - 11" Typ. (Transformer base - 15" Typ.)
4. See Std Plan 561 for Mounting and Grouting.
5. Tape Top of Anchor Bolts w/ Corrosion Protection Tape per Specs

Ref Std Spec Sec 8-30

APPROVED BY THE BOARD OF PUBLIC WORKS 10/31, 19[illegible] CHAIRMAN ATTEST: [illegible] EXEC SECRETARY	CITY OF SEATTLE DEPARTMENT OF ENGINEERING	Street Light Foundations & Wiring

Handhole Schedule

HANDHOLE Type	TOP UNIT Inside Dimensions L	W	H	EXTENSION UNIT (E) H
1	19"	14"	12"	12"
2	28"	17"	12"	12"
3	36"	24"	30"	NA
4	24" Diameter			NA
GRHH	8" Diameter			NA

LID Dimensions L	W
17 3/4"	13"
26 5/8"	17 1/8"
38 1/2"	26"

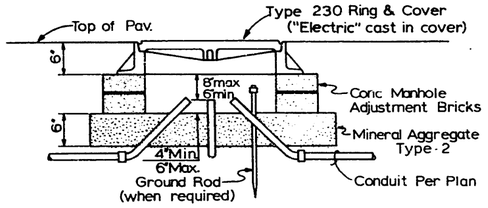

Type 4 Handhole Traffic Bearing

No Scale

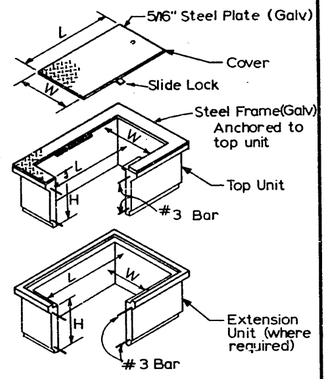

Type 1 & 2 Handhole with Extension

No Scale

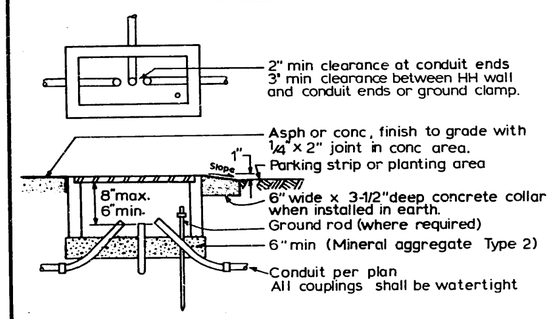

Handhole Installation Detail

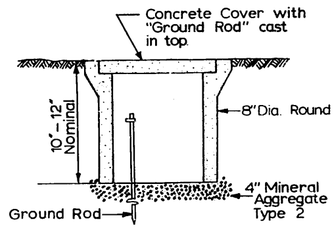

Ground Rod Handhole (GRHH)

Notes:

1. The cover shall have 1/16" to 1/8" clearance on each edge within the frame after galvanizing.
2. The ground rod shall extend a minimum of 3" above the bottom of the handhole a maximum of 6".
3. Type 1, 2, and 3 handhole covers shall have "TC" or "SL" on them, as appropriate.
4. Type 4 handhole shall be installed in roadways, parking lots, etc.

Ref. Std. Spec. Sec. 8-33

APPROVED BY THE BOARD OF PUBLIC WORKS 10/31, 19 86 CHAIRMAN ATTEST: EXEC SECRETARY	CITY OF SEATTLE DEPARTMENT OF ENGINEERING	Handholes

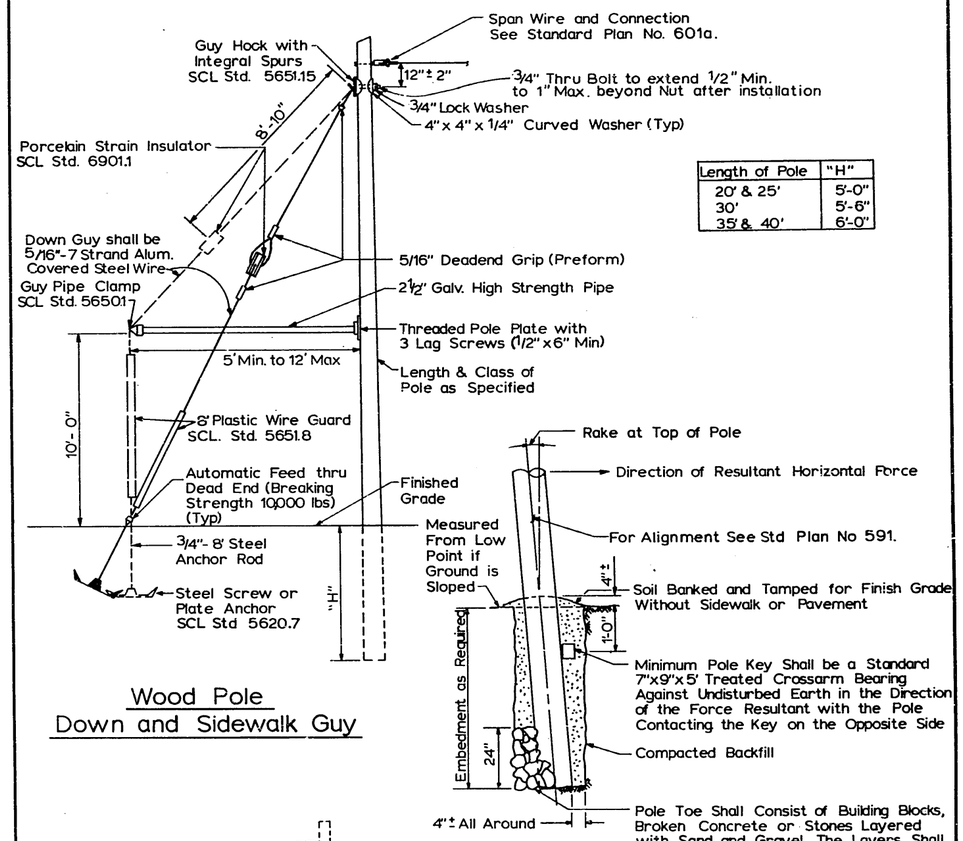

Length of Pole	"H"
20' & 25'	5'-0"
30'	5'-6"
35' & 40'	6'-0"

Wood Pole Down and Sidewalk Guy

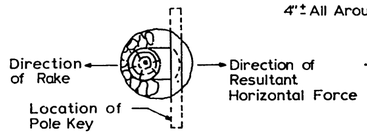

Plan

Wood Pole Keying Standard

Rake and Embedment Schedule		
Length Ft.	Embedment Ft.	Rake in Inches
30	5'-6"	18
35	6'-0"	20
40	6'-0"	22

Ref. Std. Spec. Sec. 8-32

Do Not Scale

APPROVED BY THE BOARD OF PUBLIC WORKS 10/31, 19 86 CHAIRMAN ATTEST: EXEC SECRETARY	CITY OF SEATTLE DEPARTMENT OF ENGINEERING	Wood Strain Poles

Standard Plan No. 561

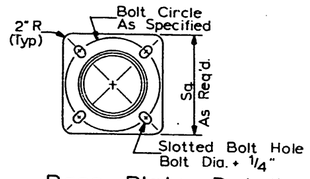

Base Plate Detail

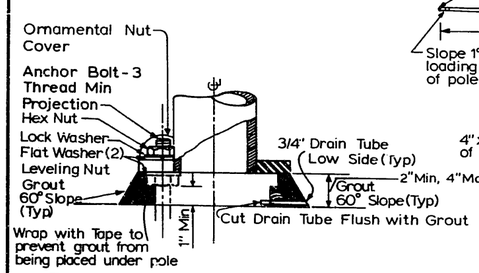

Pole Mounting and Grout Detail

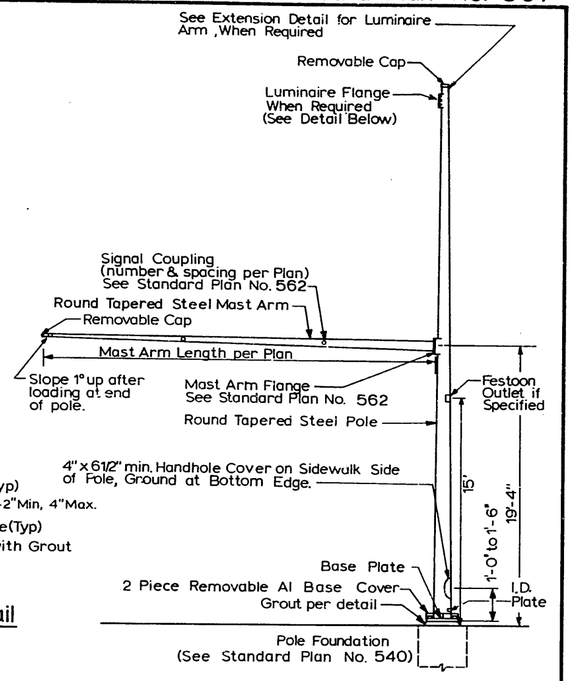

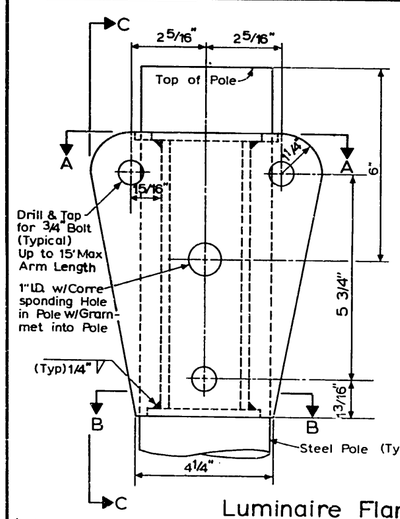

Luminaire Flange

Ref. Std. Spec. Sec. 8-30.

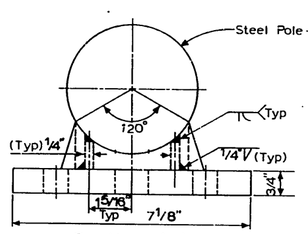

Section A-A

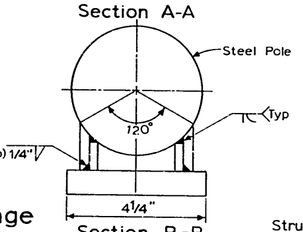

Section B-B

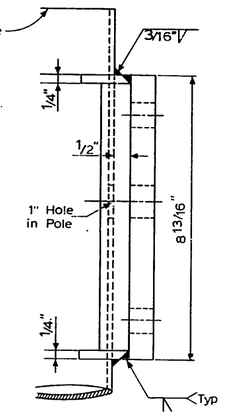

Section C-C

Structural Carbon Steel Plates shall be ASTM A36

APPROVED BY THE BOARD OF PUBLIC WORKS 10/31 1986 CHAIRMAN ATTEST: EXEC SECRETARY	CITY OF SEATTLE DEPARTMENT OF ENGINEERING	Steel Mast Arm Pole with Street Light

Standard Plan No. 562

Mast Arm Length	OD of Pole @ 20'	J	K	L	M	N(Pl L)	N(Pl M)	Bolt
15', 20', 25', 30'	8"	10 1/2"	11"	1"	1 1/4"	1 1/8"	1"-8NC	1"-8NC x 2 1/4"
35', 40'	9 3/8"	12"	12"	1 1/4"	1 1/2"	1 3/8"	1 1/4"-7NC	1 1/4"-7NC x 2 3/4"

Bolt type shall be adequate to develop full strength of longest mast arm length.

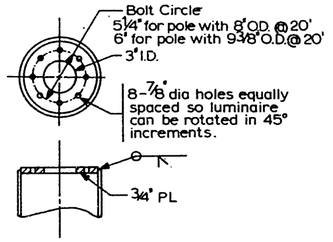

Top Plate Detail

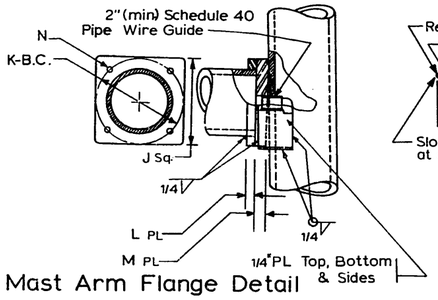

Mast Arm Flange Detail

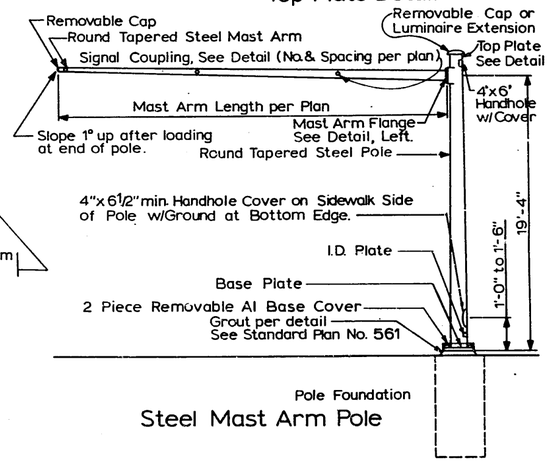

Steel Mast Arm Pole

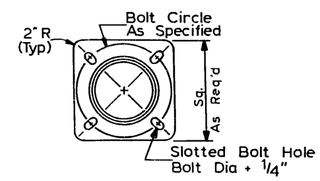

Base Plate Detail

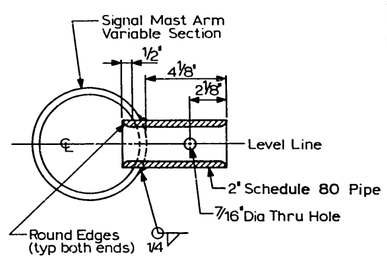

Signal Coupling Detail

Coupling to be fabricated & installed before galvanizing.

Ref. Std. Spec. Sec. 8-30

Notes

Pole and mast arm design shall conform to AASHTO Standard Specifications for Highway Signs, Luminaires and Traffic Signals latest edition and with the following local requirements.

For Foundation see Standard Plan No. 541.

APPROVED BY THE BOARD OF PUBLIC WORKS 10/31 1986 CHAIRMAN ATTEST: EXEC SECRETARY	CITY OF SEATTLE DEPARTMENT OF ENGINEERING	Steel Mast Arm Pole

Standard Plan No. 563

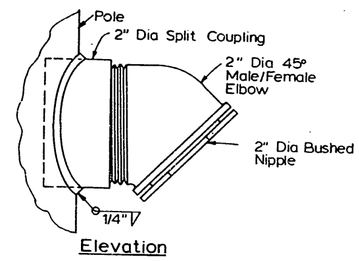

Elevation

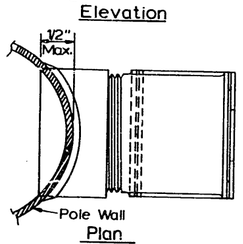

Plan

Notes:
1 All Outlets shall be plugged with Threaded Insert Plugs during shipment to prevent damage to threads.
2 Remove Burrs and Sharp Edges to prevent damage to Electrical Cable.
3 Split Coupling shall Extend into the Pole a Maximum of 1/2" as shown.

Cable Outlet Detail

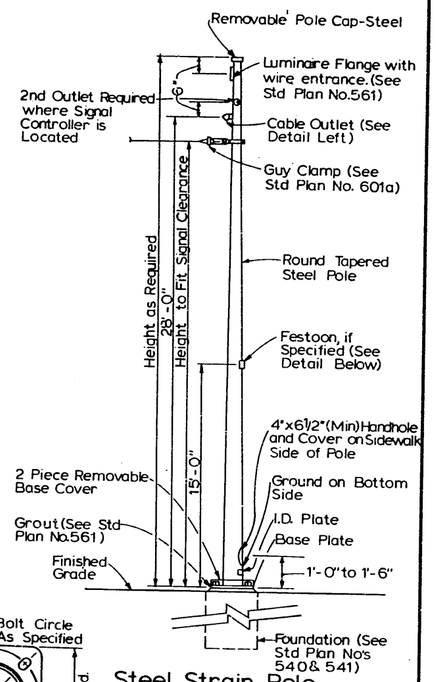

Steel Strain Pole

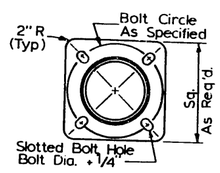

Base Plate Detail

Pole Type	A	B
Max Horizontal Dead Load @ 26'-6" (in Lbs)	1175#	1625#
Max Horizontal Deflection @ 26'-6" under Max Dead Load (in Inches)	5.75"	5.75"
Max O D of Pole Shaft @ Base	10"	11"

Steel Strain Poles

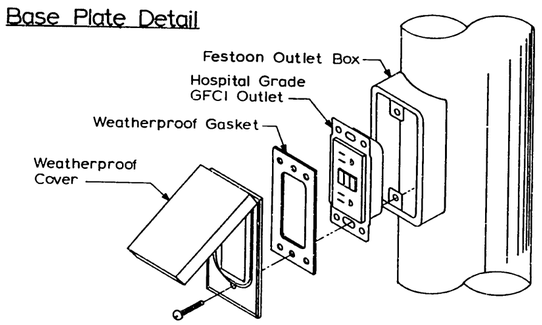

Festoon Outlet Detail

Ref. Std. Spec. Sec. 8-32

APPROVED BY THE BOARD OF PUBLIC WORKS 10/31, 1986 CHAIRMAN ATTEST: EXEC SECRETARY	CITY OF SEATTLE DEPARTMENT OF ENGINEERING	Strain Poles

Standard Plan No 565

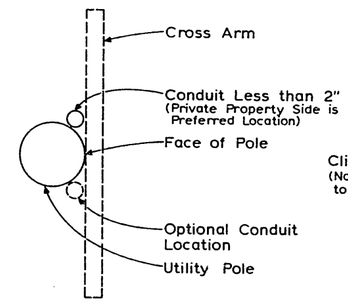

Plan View

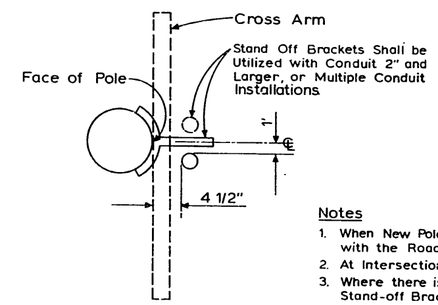

Alternate Plan View

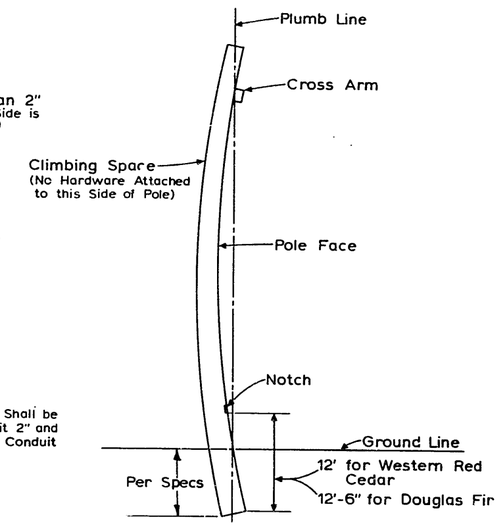

Elevation View

Notes
1. When New Poles are installed Along a Roadway, the Face Shall be Parallel with the Roadway and Opposite the Direction of the Greatest Apparent Strain.
2. At Intersections, the Pole Face Shall be Away from the Intersecting Street.
3. Where there is an Existing Riser on the Pole, all New Risers shall be on Stand-off Brackets and the Utility Notified to Relocate the Existing Riser.
4. Poles shall be installed so as to be plumb after loading.

Wood Pole Framing and Installation

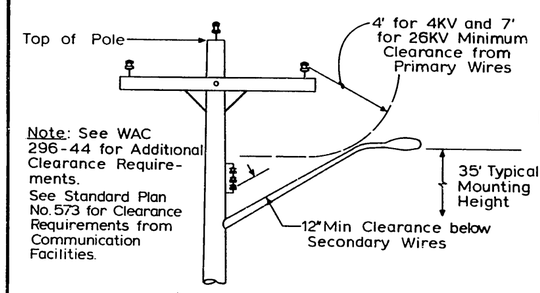

Note: See WAC 296-44 for Additional Clearance Requirements.
See Standard Plan No. 573 for Clearance Requirements from Communication Facilities.

Primary Wires

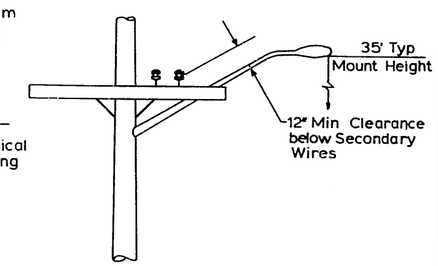

Secondary Wires

Ref. Std. Spec. Sec. 8-32

Clearances From Utility Wires

APPROVED BY THE BOARD OF PUBLIC WORKS 10/31, 1986 CHAIRMAN ATTEST: EXEC SECRETARY	CITY OF SEATTLE DEPARTMENT OF ENGINEERING	Utility Pole Details

Standard Plan No. 570

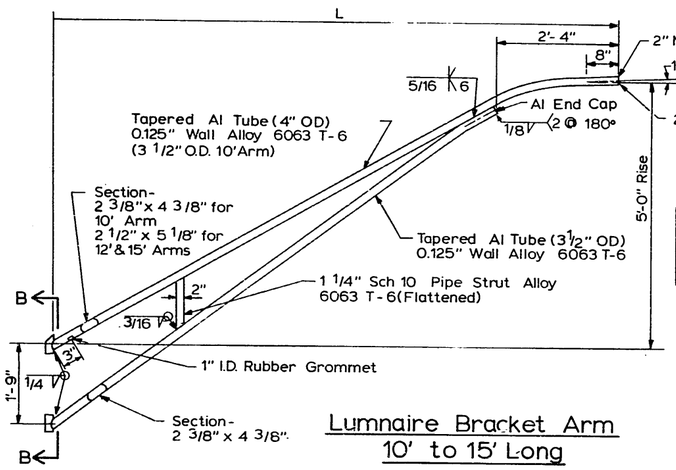

Nominal Arm Length	L
10'	9'-6"
12'	11'-6"
15'	14'-6"

Lumnaire Bracket Arm 10' to 15' Long

Notes:

1. Brackets Shall be Designed and Manufactured per 1975 AASHTO to Support a Maximum Luminaire of 50 lbs, 1.2 ft^2 EPA for a Maximum 80 mph Wind and a Coefficient of Height of 1.10.
2. Tubing Used for Arm Members Shall be Seamless, Strut Shall be per ASTM B429.
3. Brackets Shall be Heat Treated After Welding.
4. Luminaire Support Brackets, for Wood Pole Mounting Shall Meet the Applicable Requirements of EEI-NEMA-TDJ-135. Standards for Street Lighting Poles, and TDJ-139 Standards for Materials, Finishes and Performance Tests for Equipment, and Standard Specifications for Structural Supports for Highway Signs, Luminaires and Traffic Signals. (AASHTO)
5. Low Rise Bracket Arms Shall be Constructed per This Detail with the Revisions Noted Below. Low Rise Bracket Arms Shall be Utilized Only When Specifically Called for on the Plans.

Nominal Length	Member Size		Rise
	Upper Tube	Lower Tube	
10' LR	3"	1 1/2"	3'-3"
12' LR	3 1/2"	1 1/2"	3'-3"
15' LR	4"	2"	3'-3"

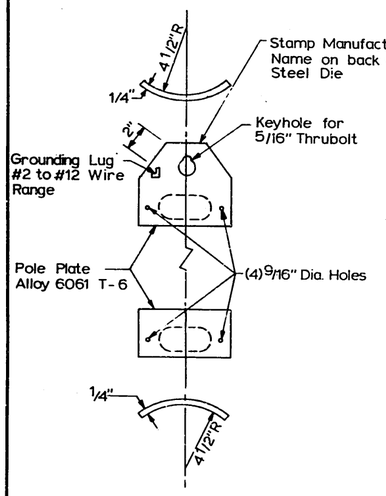

Section B-B

Ref. Std. Spec. Sec. 8-30

Do Not Scale

APPROVED BY THE BOARD OF PUBLIC WORKS 10/31, 19[illegible] CHAIRMAN ATTEST: [illegible] EXEC SECRETARY	CITY OF SEATTLE DEPARTMENT OF ENGINEERING	Luminaire Bracket Arms (Wood Pole Mounting)

Standard Plan No. 571

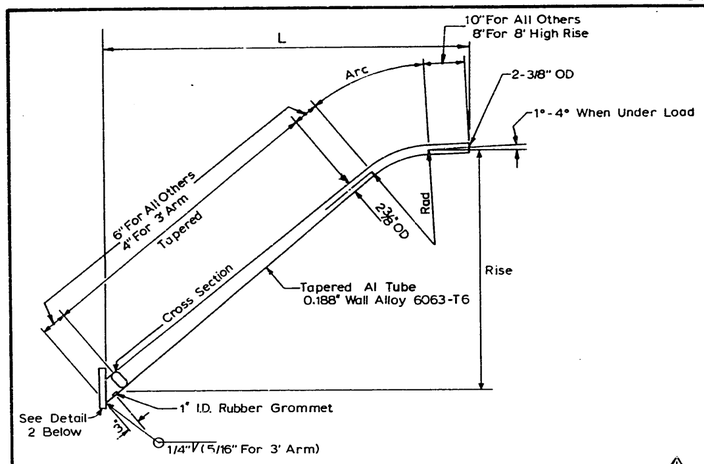

Luminaire Support Brackets

Note:

1. Luminaire Support Brackets, for wood pole mounting, shall meet the applicable requirements of EEI-NEMA TDJ-135, Standards for Street Lighting Poles, Type A and TDJ-139. Standards for Materials, Finishes and Performance Tests for Equipment and Standard Specifications for Structural Supports for Highway Signs, Luminaires and Traffic Signals. (A.A.S.H.T.O.)

Nominal Arm Length	L	Rise	Rad	OD	Cross Section
3'	3'2.5'	1'-0"	1'-0"	3"	2 3/8" x 3 1/2"
6'	5'-6"	2'-6"	2'-0"	3 1/2"	2 3/8" x 4 3/8"
8' (Low Rise)	7'-6"	2'-6"	2'-0"	4"	2 1/2" x 5 1/8"
8' (High Rise)	7'-6"	5'-0"	2'-0"	4"	2 1/2" x 5 1/8"

2. 8' Low Rise Arms shall be utilized only when specifically called out on the plan.
3. All Tubing used for Arm Members shall be Seamless.
4. The Bracket shall be Heat Treated to temper after welding.
5. Brackets shall be Designed and Manufactured per A.A.S.H.T.O. to support a Luminaire of 50 lbs., a 1.2 Ft^2 EPA for a 80 M.P.H. wind and a coefficient of height of 1.10.

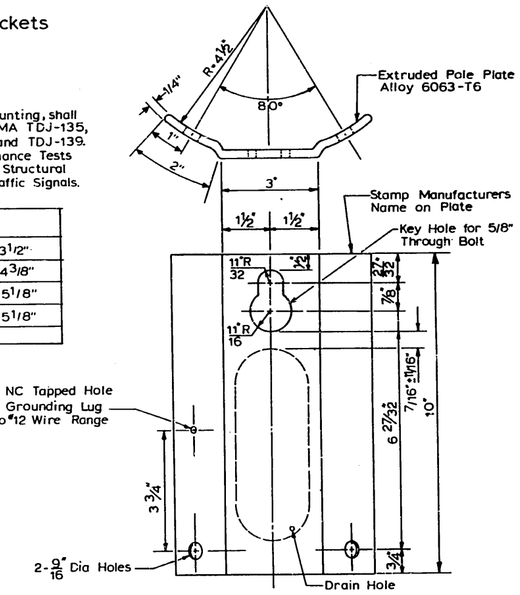

Extruded Pole Plate

Detail 2

Bracket Arm Length: 3', 6', 8'

Ref. Std. Spec. Sec. 8-30.

APPROVED BY THE BOARD OF PUBLIC WORKS 10/31, 19[illegible] CHAIRMAN ATTEST: [illegible] EXEC SECRETARY	CITY OF SEATTLE DEPARTMENT OF ENGINEERING	Luminaire Bracket Arm (Wood Pole Mount)

Standard Plan No. 572

12' and 15' Luminaire Arms

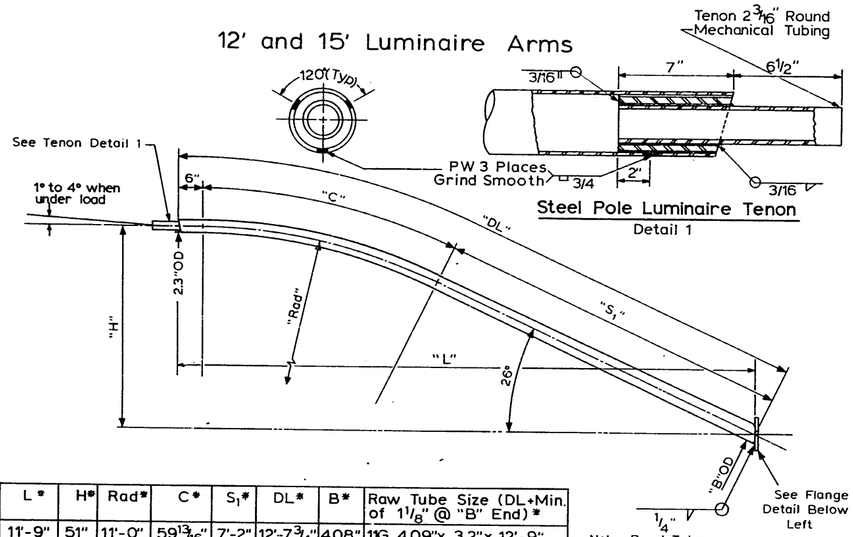

Note: Bevel Tube as Necessary for Flush Weld.

Nom Span	L *	H*	Rad*	C *	S_1*	DL*	B*	Raw Tube Size (DL+Min. of 1 1/8" @ "B" End)*
12'	11'-9"	51"	11'-0"	59 13/16"	7'-2"	12'-7 3/4"	4.08"	11G 4.09"x 3.2"x 12'-9"
15'	14'-9"	57"	19'-6"	8'-10"	6'-4"	15'-8"	4.29"	11G 4.32"x 3.2"x 16'-0"

*These dimensions are only illustrative of the general outline and materials used in the construction of these arms and are not intended to exclude manufacturers standard products.

Flange Detail

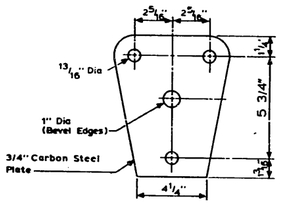

Flange dimensions and hole locations must match those on pole flange.

2' Thru 10' Luminaire Arms

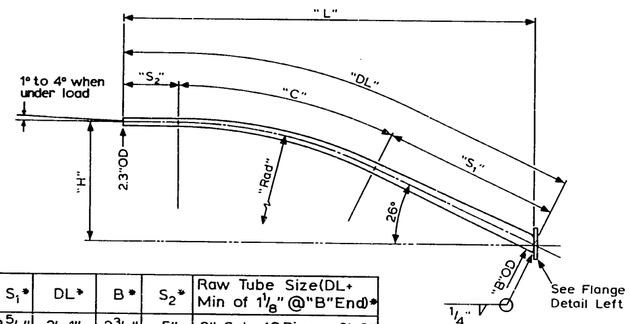

Note: Bevel Tube as Necessary for Flush Weld.

Nom Span	L *	H*	Rad*	C *	S_1*	DL*	B*	S_2*	Raw Tube Size(DL+ Min of 1 1/8" @"B"End)*
2'	2'-0"	5 1/4"	36"	16 5/16"	3 5/8"	2'-1"	2 3/8"	5"	2" Sch 40 Pipe x 2'-2"
3'	3'-4 1/2"	9 1/8"	"	"	2 5/8"	3'-6 3/8"	2.79"	13 1/2"	11EB 2.82"x 2.3"x 3'-9"
4'	4'-4 1/2"	15"	"	"	26"	4'-7 3/4"	2.95"	"	11EB 2.96"x 2.3"x 4'-9"
6'	6'-4 1/2"	24"	6'-0"	27 3/16"	41"	6'-9 11/16"	3.25"	"	11EB 3.28"x 2.3"x 7'-0"
8'	8'-4 1/2"	30"	9'-2"	49 7/8"	43"	8'-10 3/8"	3.54"	"	11EB 3.56"x 2.3"x 9'-0"
10'	10'-3 1/8"	40"	10'-5"	56 5/8"	62 1/4"	10'-11"	3.82"	12 1/8"	11EB 3.84"x2.3"x11'-0"

Ref. Std. Spec. Sec. 8-30.

Material Specification

Plates and Shapes ASTM A36
Shafts ASTM A570 Gr40
Galvanizing ASTM A153

APPROVED BY THE BOARD OF PUBLIC WORKS 10/31, 1986 CHAIRMAN ATTEST: EXEC SECRETARY	CITY OF SEATTLE DEPARTMENT OF ENGINEERING	Luminaire Bracket Arm (Steel Pole Mount)

Standard Plan No. 573

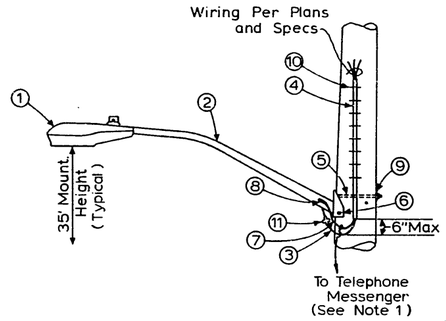

Item	Quant	Description	Size
1	1	Luminaire	Per Plan
2	1	Bracket, Aluminum	Per Plan
3	*	Wire, Copper (Pole & Bracket)**	#10**
4	*	Molding, Plastic	1/2"
5	1	Thru Bolt, Galvanized Machine	5/8"x *
6	2	Screws, Galvanized Lag, Fettered Drive, Pilot Point	1/2" x 4"
7	*	Wire, THWN #6 Awg. Copper	#6
8	1	Grounding Lug	
9	1	Washer, Square, Curved	2 1/4" x 2 1/4"
10	*	Molding Staples 12" Max Spcs	3/4"x2 3/4"
11	1	In-Line Fuse	Per Specs

* Length/Quantity As Required
** See Specs for allowable substitutions

Notes:

1. Ground the bracket arm to the telephone messenger (where present) if it has less than the following clearances:
   20" above or 24" below telephone wires.
   12" from telephone cables or terminal.
   2" from telephone service.
2. Arm to be 90 degrees to curb.
3. The actual service connection shall be made by others and the contractor shall coil 8' of wire attach to the pole at the service point.
4. Extend molding to centerline of secondary bracket. (Where the secondary bracket is mounted on a crossarm, the wiring on the crossarm shall also be enclosed in molding)

Luminaire and Bracket
(For Wood Poles Only)

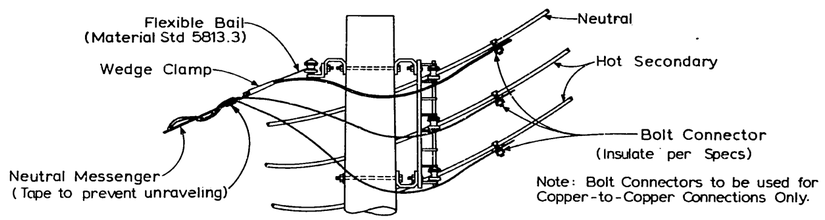

Note: Bolt Connectors to be used for Copper-to-Copper Connections Only.

Secondary Service Attachment

Ref Std Spec Sec 8-31

APPROVED BY THE BOARD OF PUBLIC WORKS 10/31, 1986 CHAIRMAN ATTEST: EXEC SECRETARY	CITY OF SEATTLE DEPARTMENT OF ENGINEERING	Secondary Wiring

Standard Plan No. 580

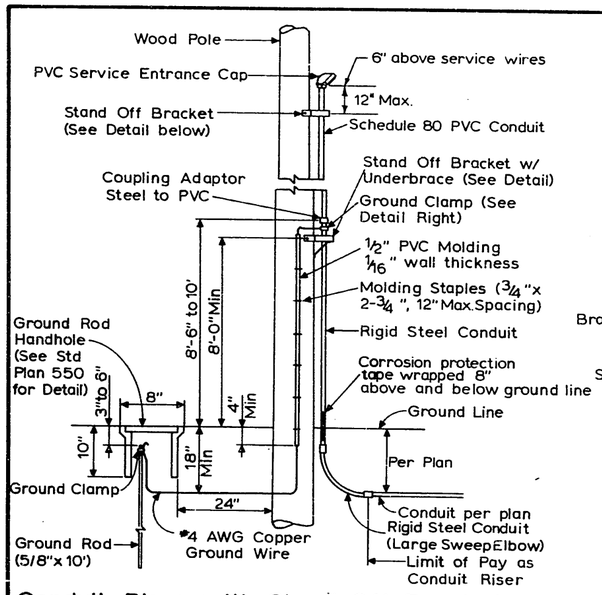

Conduit Riser with Stand-Off Bracket

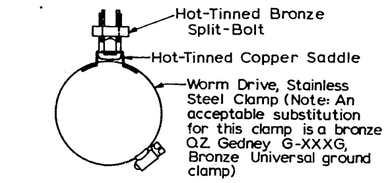

Ground Clamp Detail

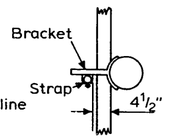

Figure 2

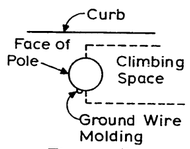

Figure 5

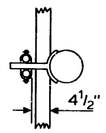

Figure 3

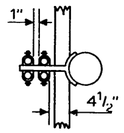

Figure 4

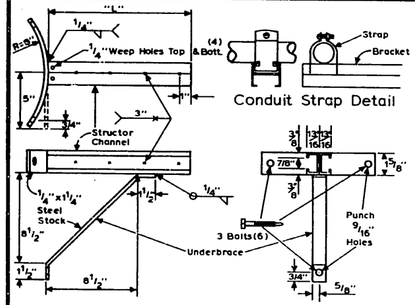

Bracket Notes:

1. Bracket shall be of the configuration and dimensions shown, free of rough or uneven surface and edges.
2. Structor Channel shall be made of cold rolled steel strip, 14ga min, in accordance with ASTM A109.
3. Installation of bracket with brace shall be at the first or lower position only on pole. Use standard bracket without brace for conduit support the balance of the distance up pole.
4. Weep holes not req'd if a notch or gap is provided at the intersection of the channel and the pole mounting bracket.
5. "L" = 10 1/2", 1'-0 1/2" or 1'-6"
6. Bolts shall be 1/2"x 4" Pilot point Fetter drive.

Stand-off Bracket Detail

Ref. Std. Spec. Sec. 8-33

Notes:

1. A single conduit 2" & larger or one with conductors of 750 volts or more, shall be spaced out from the pole face 4 1/2" & offset to give 1" clear space between the conduit & the center line of the pole lead. (Fig. 2)
2. When 2 conduits are installed, they shall be spaced out 4 1/2" from the pole face & separate 2", providing a clear space of 1" on each side of ctr line of pole lead. (Fig. 3)
3. If more than 2 conduits are required they shall be installed as in Fig 4. If 2 voltages are involved, the higher voltage shall be placed next to the pole.
4. On poles with existing conduits, new conduits shall be installed in accordance with this specification.
5. Rigid steel conduit shall be grounded just below coupling, approximately 8' to 10' above ground, as shown.
6. When 2 or more rigid steel conduits are installed on one pole, one conduit shall be grounded as shown. The conduit supports & straps shall serve as a bonding device between the steel conduits.
7. The ground wire shall be one continuous length. Insert the ground wire from the bottom of the ground clamp & bend over the clamp before tightening.
8. Place ground wire in quadrant between pole face & secondary neutral. (Fig 5)
9. All steel hardware shall be hot dipped galvanized after fabrication per ASTM A123.
10. See Std No 565 for location of risers on pole.
11. Conduit clamp spacing shall be per the NEC with a minimum of one clamp per 10' length of conduit.
12. Where PVC coated RGS conduit is specified it shall be stripped of PVC coating to install the grounding clamp, then touched up with approved PVC touch-up compound to cover all exposed metal.

APPROVED BY THE BOARD OF PUBLIC WORKS 10/31, 1962 CHAIRMAN ATTEST: EXEC SECRETARY	CITY OF SEATTLE DEPARTMENT OF ENGINEERING	Conduit Riser

Standard Plan No. 581

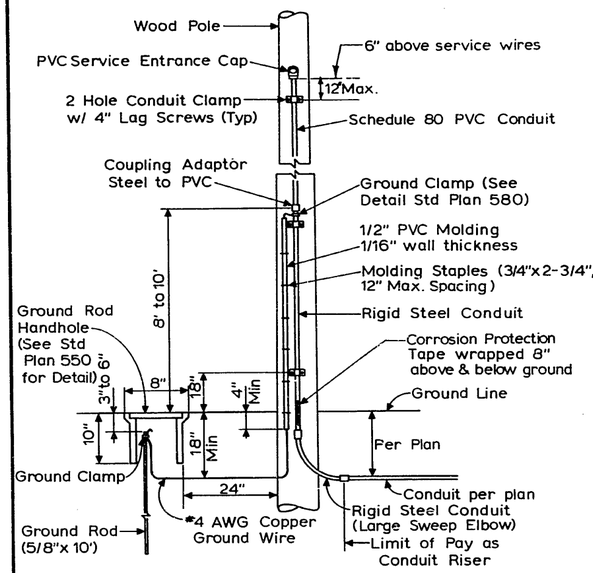

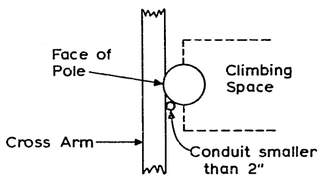

Figure 1

Notes:

1. A single Conduit smaller than 2" with conductors of less than 750 Volts potential may be placed directly on the pole in the crotch of the crossarm. See Figure 1 above.
2. See Standard Plan No 565 for location of risers on pole.

Conduit Riser Clamped to Pole

Ref. Std. Spec. Sec. 8-33.

APPROVED BY THE BOARD OF PUBLIC WORKS 10/31, 1962 CHAIRMAN ATTEST: EXEC SECRETARY	CITY OF SEATTLE DEPARTMENT OF ENGINEERING	Conduit Riser

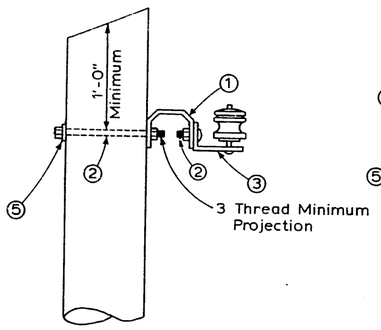

Angle Type

(for Construction to Another Pole)

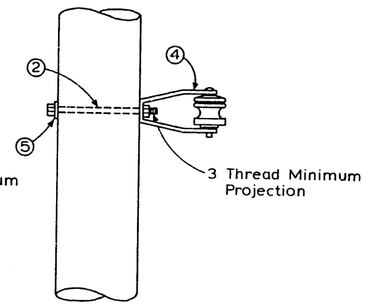

Clevis Type

(for Dead-End Construction)

Secondary Spool Insulator Bracket

Material List — Material Standards

Item	Quantity	Description	Size	Number
1	1	Bracket Extension		5805.1
2	2	Bolt, Galv. Machine & Nut	5/8"x *	7807.1
3	1	Bracket, Secondary Spool Insulation		6904.2
4	1	Clevis & Insulation		6904.1
5	1	Washer, Square	2¼"x 2¼"	5847.1

Notes

* Length as Required

1. Secondary Spool Bracket Shall be on a Separate Thru Bolt (i.e. Not the Same as the Bracket Arm.)
2. 3'-4" Minimum Distance from Thru Bolt to Telephone Company Equipment.
3. All Hardware Shall be Galvanized.

Ref Std Spec Sec 8-30

APPROVED BY THE BOARD OF PUBLIC WORKS 10/31, 19 [illegible] CHAIRMAN ATTEST: [illegible] EXEC SECRETARY	CITY OF SEATTLE DEPARTMENT OF ENGINEERING	Insulator Brackets

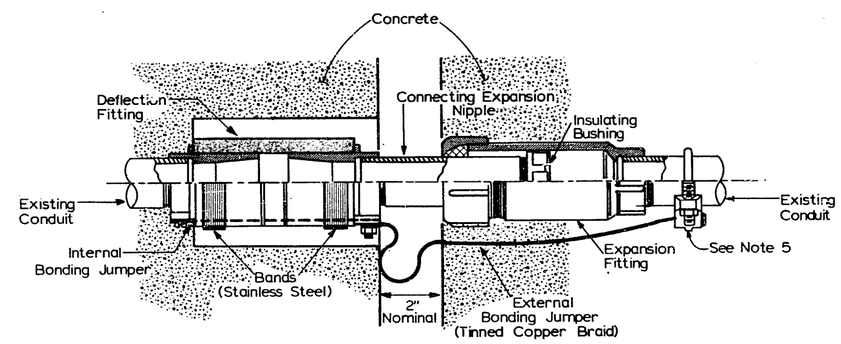

Notes:

1) End couplings shall be bronze.
2) Fittings shall be raintight and concrete tight (NEMA 4).
3) Insulating Bushings shall be utilized throughout to provide a smooth continuous wire way.
4) The entire fitting shall comply with the NEC requirement for an electrically continuous raceway.
5) Where PVC coated rigid steel is specified, remove PVC coating, install ground clamp and bonding jumper. Recoat with PVC by hand.

Ref. Std. Spec. Sec. 8-33.

APPROVED BY THE BOARD OF PUBLIC WORKS 10/31, 19 [illegible] CHAIRMAN ATTEST: [illegible] EXEC SECRETARY	CITY OF SEATTLE DEPARTMENT OF ENGINEERING	Combination Expansion/Deflection Fitting

Standard Plan No. 600a

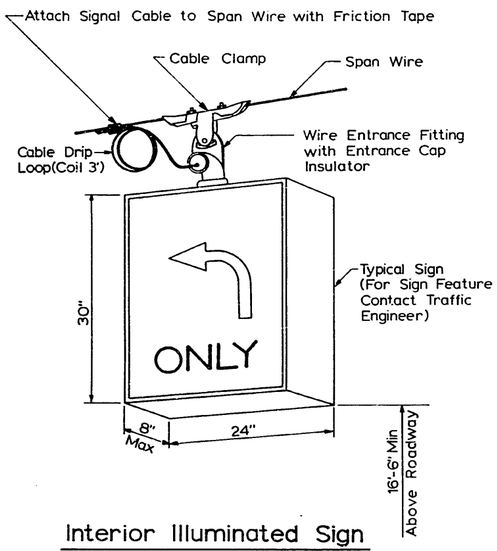

Interior Illuminated Sign

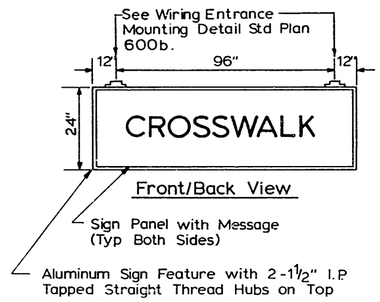

Crosswalk Sign Unit

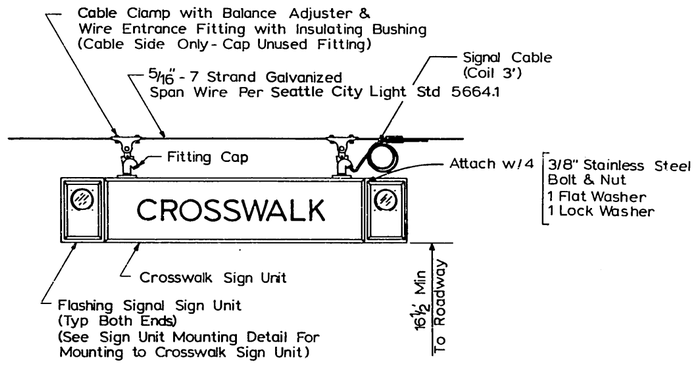

Double Faced Interior Illuminated Crosswalk Sign with Flashing Signals (Sign Unit)

Ref. Std. Spec. Sec. 8-21.

APPROVED BY THE BOARD OF PUBLIC WORKS 10/31, 19[illegible] CHAIRMAN ATTEST: [illegible] EXEC SECRETARY	CITY OF SEATTLE DEPARTMENT OF ENGINEERING	Overhead Interior Illuminated Signs

Standard Plan No. 600b

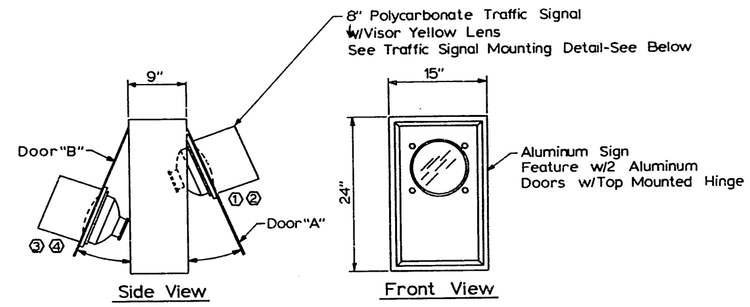

Housing:
Made From Reinforced Extruded Aluminum Formed Into Rigid and Corrosion Resistant Housing.

Flashing Signal Sign Unit

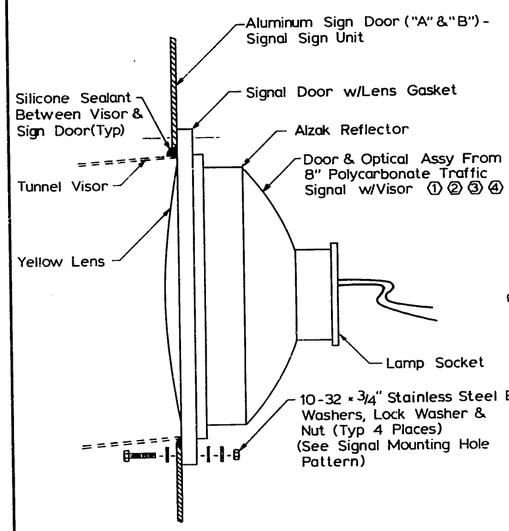

Flashing Signal Mounting Detail

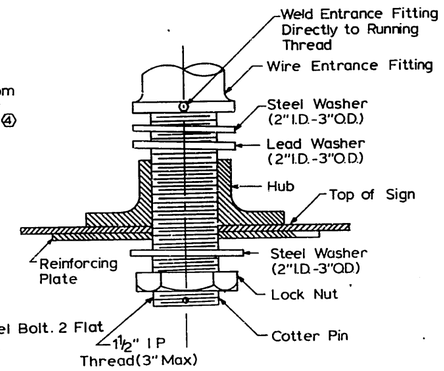

Wiring Entrance Mounting Detail

Ref. Std. Spec. Sec. 8-21.

APPROVED BY THE BOARD OF PUBLIC WORKS 10/1, 19[illegible] CHAIRMAN ATTEST: [illegible] EXEC SECRETARY	CITY OF SEATTLE DEPARTMENT OF ENGINEERING	Overhead Interior Illuminated Signs

Standard Plan No. 601a

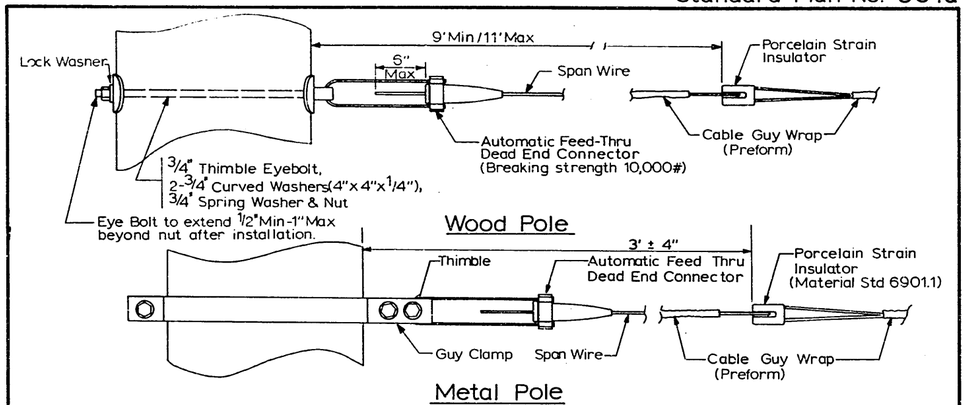

Wood Pole

Metal Pole

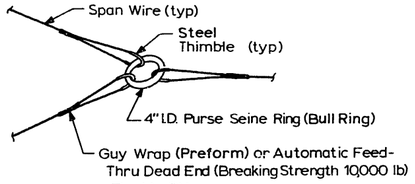

Bull Ring

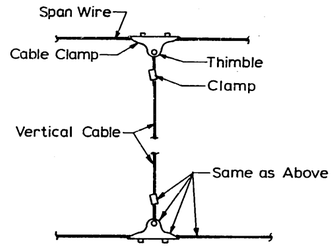

Vertical Catenary Connection

Note

1) All Steel Hardware to be Hot Dip Galvanized or Stainless Steel unless otherwise stipulated in the Specifications or Plans.
2) Span Wire shall be Aluminum Coated Steel.
3) Spread Thimble to fit the bail of the Automatic Dead End.

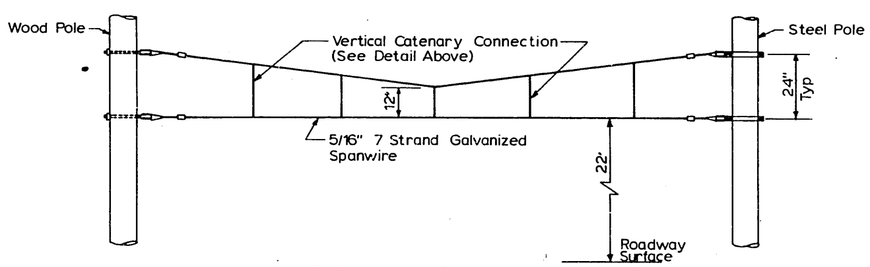

Catenary Span Wire Installation

Ref. Std. Spec. Sec. 8-21.

APPROVED BY THE BOARD OF PUBLIC WORKS 12/1/, 19 6 CHAIRMAN ATTEST: EXEC SECRETARY	CITY OF SEATTLE DEPARTMENT OF ENGINEERING	Span Wire Installation

Standard Plan No. 601b

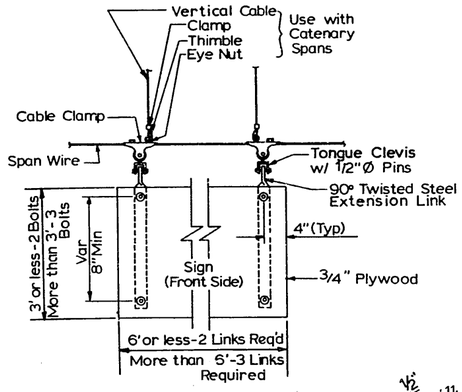

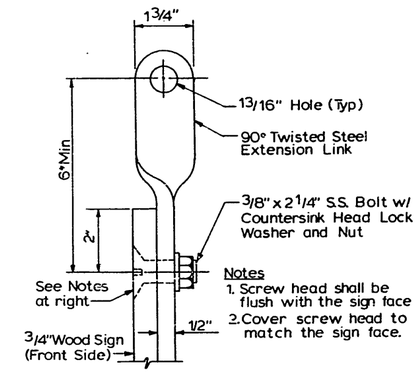

Notes
1. Screw head shall be flush with the sign face
2. Cover screw head to match the sign face.

90° Twisted Steel Extension Link

Span Wire Mounted Wood Sign

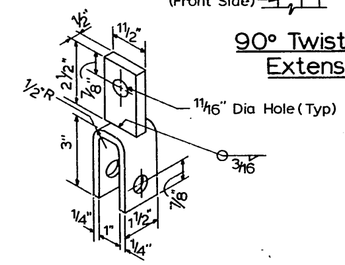

Tongue Clevis

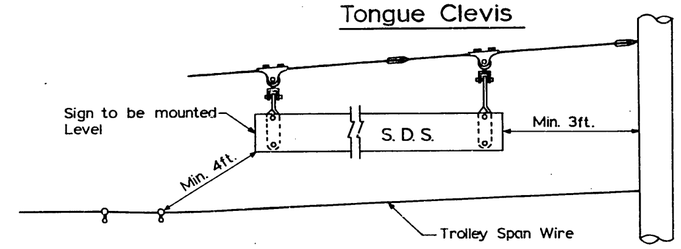

Street Designation Sign
Wood Signs Only

Ref. Std. Spec. Sec. 8-21

Do Not Scale

APPROVED BY THE BOARD OF PUBLIC WORKS 12/1/, 19 6 CHAIRMAN ATTEST: EXEC SECRETARY	CITY OF SEATTLE DEPARTMENT OF ENGINEERING	Overhead Wood Signs Spanwire Mounted

Standard Plan No. 601c

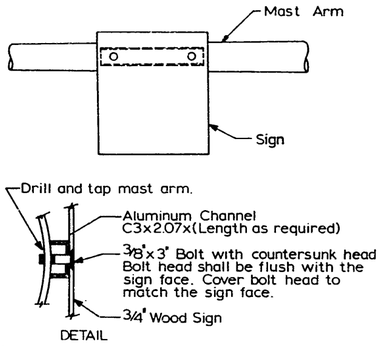

Sign Mounting on Mast Arm

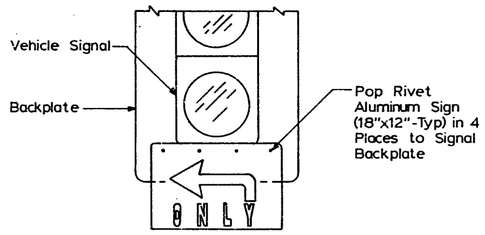

Sign Mounting on Signal Backplate

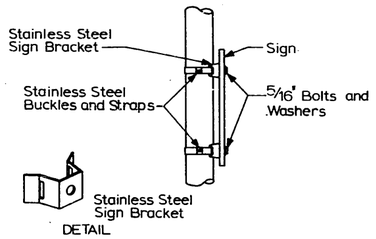

Temporary Sign Mounting on Metal Pole

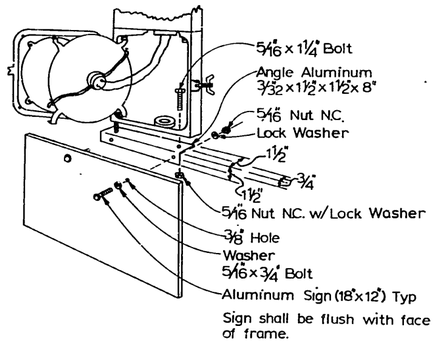

Sign Mounting on Bottom of Signal

Notes:

1. Bolts shall be stainless steel.
2. Mounting of traffic signs shall be as follows:

   On metal poles thinner than 7 gauge, use 3/8" stainless steel rivnuts.

   On metal poles 7 gauge or thicker, drill and tap for 3/8" bolt. (stainless steel rivnuts optional)

   On poles filled with or made from concrete, use 3/8" x 2 1/2" min. stud bolt anchors with hex nut.
3. For Sign Feature contact Traffic Engineer.

Ref. Std. Spec. Sec. 8-21

APPROVED BY THE BOARD OF PUBLIC WORKS 10/31, 19 76 CHAIRMAN ATTEST: EXEC SECRETARY	CITY OF SEATTLE DEPARTMENT OF ENGINEERING	Sign Installation (Non-Spanwire Mounting)

Standard Plan No. 610

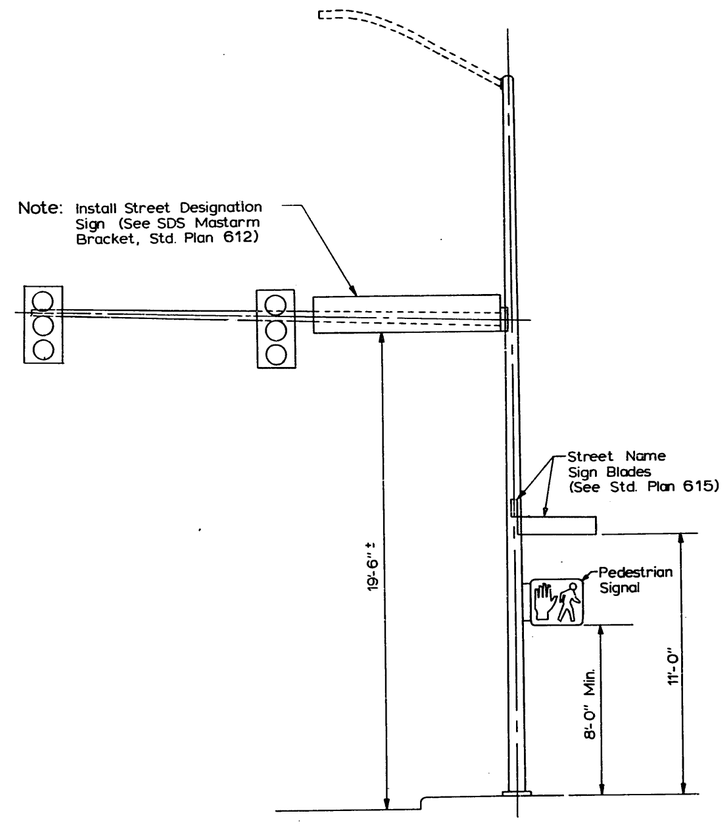

Ref. Std. Spec. Sec. 8-21.

Do Not Scale

APPROVED BY THE BOARD OF PUBLIC WORKS 10/31, 19 76 CHAIRMAN ATTEST: EXEC SECRETARY	CITY OF SEATTLE DEPARTMENT OF ENGINEERING	Standard Sign Installation Steel Poles

Standard Plan No. 611

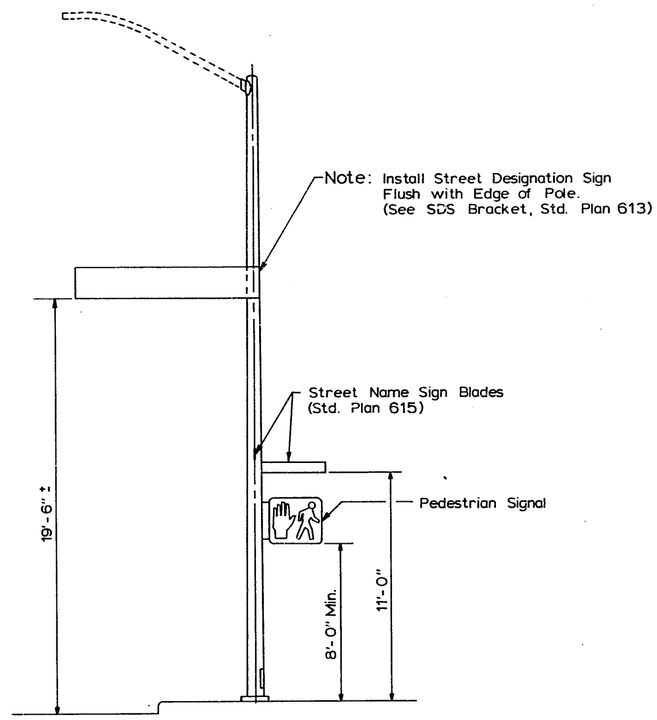

Ref. Std. Spec. Sec. 8-21.

Do Not Scale

APPROVED BY THE BOARD OF PUBLIC WORKS 10/31, 19 86 CHAIRMAN ATTEST: EXEC SECRETARY	CITY OF SEATTLE DEPARTMENT OF ENGINEERING	SDS & SNS Installations on Steel Strain Poles

Standard Plan No. 612

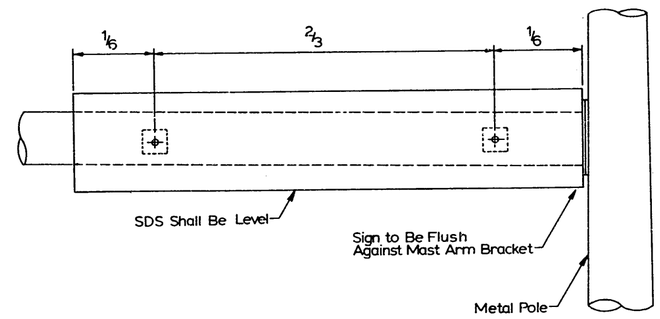

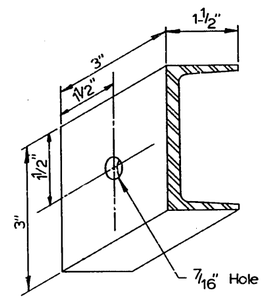

C 3x2.1
Extruded Al

See Notes 1 & 2

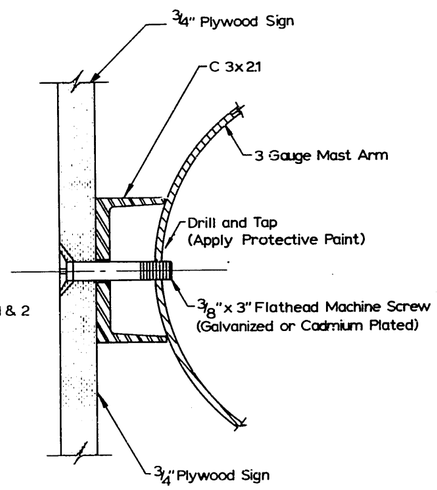

Notes:

1. Screw Head Shall Be Flush with the Sign Face.
2. Cover Screw Head to Match Sign Face.

Ref. Std. Spec. Sec. 8-21.

Do Not Scale

APPROVED BY THE BOARD OF PUBLIC WORKS 10/31, 1986 CHAIRMAN ATTEST: EXEC SECRETARY	CITY OF SEATTLE DEPARTMENT OF ENGINEERING	SDS Bracket for Steel Mast Arm Poles

Standard Plan No. 613

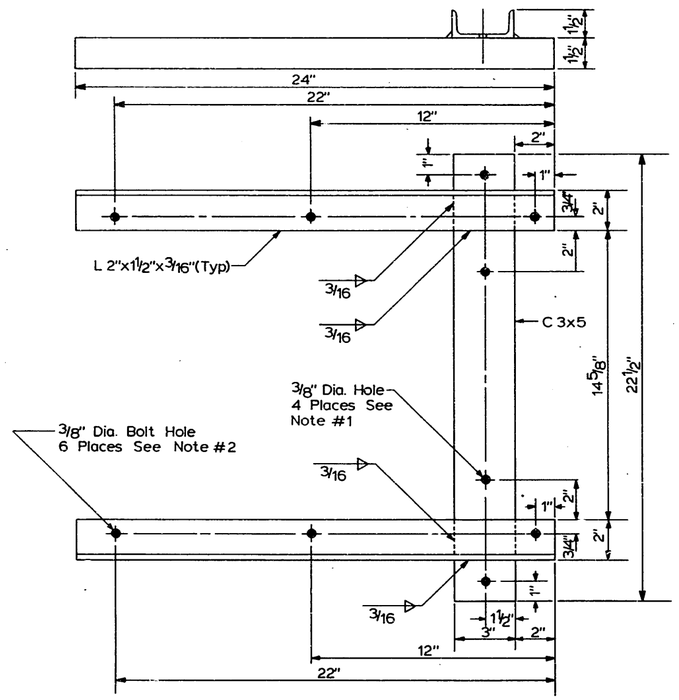

Notes:

1. When Installing Bracket Onto Strain Pole Use Four(4) 3/8" Dia. x 2½" Long Bolt with 3/8" I.D. x 1" O.D. Nylon Washer. Drill and Tap Pole As Follows; For Steel Poles Less Than Seven(7) Gauge Use 3/8" Stainless Steel Rivnuts, On Aluminum Poles Use 3/8" Aluminum Rivnuts. Rivnuts Optional On Heavier Gauge Steel Poles.
2. When Installing Sign Board Onto Bracket, Use Six(6) 3/8" Dia. x 1½" Long Flathead Machine Screws with Lockwasher. Screw Head shall be Flush w/Sign Face. Cover Screw Head to Match the Sign Face.
3. Bracket To Be Steel, Painted International Green.
4. All Bolts, Nuts, and Steel Washer To Be Cadmium Plated or Stainless Steel.

Ref. Std. Spec. Sec. 8-21.

Do Not Scale

APPROVED BY THE BOARD OF PUBLIC WORKS 10/31, 19 86 CHAIRMAN ATTEST: EXEC SECRETARY	CITY OF SEATTLE DEPARTMENT OF ENGINEERING	SDS Bracket for Steel Strain Poles

Standard Plan No. 614

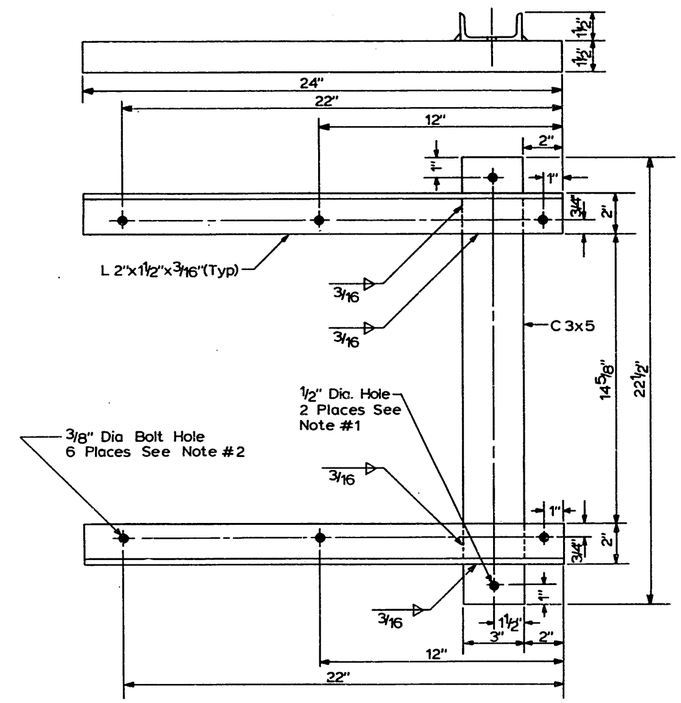

Notes:

1. When Installing Bracket Onto Wood Pole Use Two(2) ½" Dia. x Var. Long Bolt (Steel) With ½" I.D. x 1½" O.D. Steel Washer. Drill Through Pole and Install ½" I.D. x 1½" O.D. Steel Washer and Nut.
2. When Installing Sign Board Onto Bracket, Use Six(6) 3/8" Dia. x 1½" Long Flathead Machine Screws with Lockwasher. Use (1) Flat Washer Under the Head of Each Bolt. Screw Head shall be Flushed with the Sign Face. Cover Screw Head to Match the Sign Face.
3. Bracket to be Steel, Painted International Green.
4. All Bolt, Nut, and Steel Washer to be Cadmium Plated or Stainless Steel.

Ref. Std. Spec. Sec. 8-21.

Do Not Scale

APPROVED BY THE BOARD OF PUBLIC WORKS 10/31, 19 86 CHAIRMAN ATTEST: EXEC SECRETARY	CITY OF SEATTLE DEPARTMENT OF ENGINEERING	SDS Bracket for Wood Utility Poles

Standard Plan No. 615

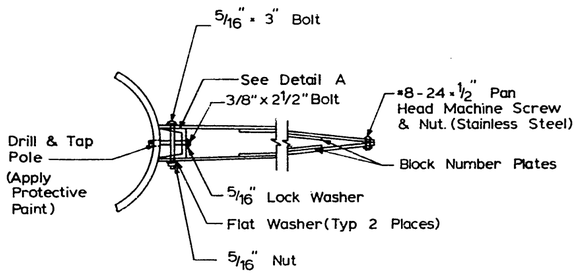

For Steel Poles Less Than Seven(7) Gauge Use 5/16" Stainless Steel Rivnuts.
On Aluminum Poles Use 5/16" Aluminum Rivnuts.
(Rivnuts Optional on Heavier Gauge Steel Poles.)

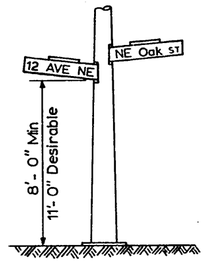

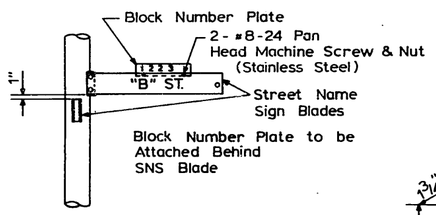

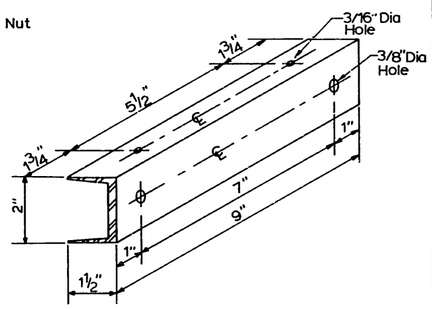

Notes:

1. Stagger S.N.S Blades with the "Avenue" Designation Below the "Street" Designation Blade
2. S.N.S. Shall be Installed Parallel to Corresponding Street.
3. All Nuts, Bolts, and Steel Washers to be Cadmium Plated or Stainless Steel.

Detail A
Aluminum Mounting Bracket

Ref. Std. Spec. Sec. 8-21.

Do Not Scale

APPROVED BY THE BOARD OF PUBLIC WORKS 10/21, 1964 CHAIRMAN ATTEST: EXEC SECRETARY	CITY OF SEATTLE DEPARTMENT OF ENGINEERING	SNS Bracket For Steel Poles

Standard Plan No. 616

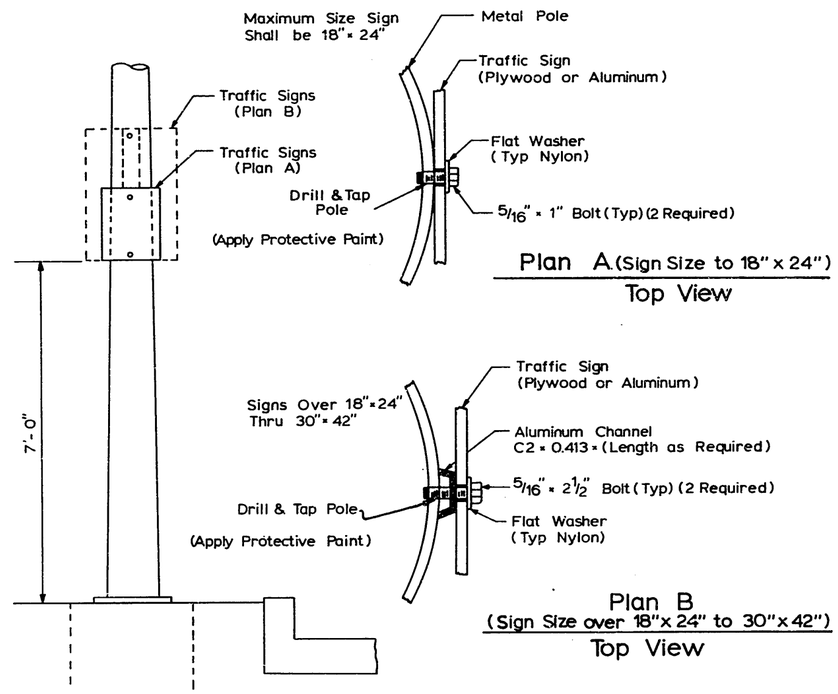

Plan A (Sign Size to 18" x 24")
Top View

Plan B
(Sign Size over 18" x 24" to 30" x 42")
Top View

Notes:

1. For Steel Poles Less Than Seven(7) Gauge, Use 5/16" Stainless Steel Rivnuts.
2. On Aluminum Poles, Use 5/16" Aluminum Rivnuts. Stainless Steel Rivnuts Optional on Heavier-Gauge Steel Poles.
3. On Poles Filled With or Made From Concrete, Use 5/16" x 2 1/2" Min. Stud Bolt Anchors with Hex Nut.
4. For Signs Over 30" x 42", Use Std. Plan 612, Mount Sign Vertically on Strain Pole with Minimum of Three(3) Fasteners.

Ref. Std. Spec. Sec. 8-21.

Do Not Scale

APPROVED BY THE BOARD OF PUBLIC WORKS 10/21, 1964 CHAIRMAN ATTEST: EXEC SECRETARY	CITY OF SEATTLE DEPARTMENT OF ENGINEERING	Traffic Sign Mounting on Metal Poles

Standard Plan No. 620

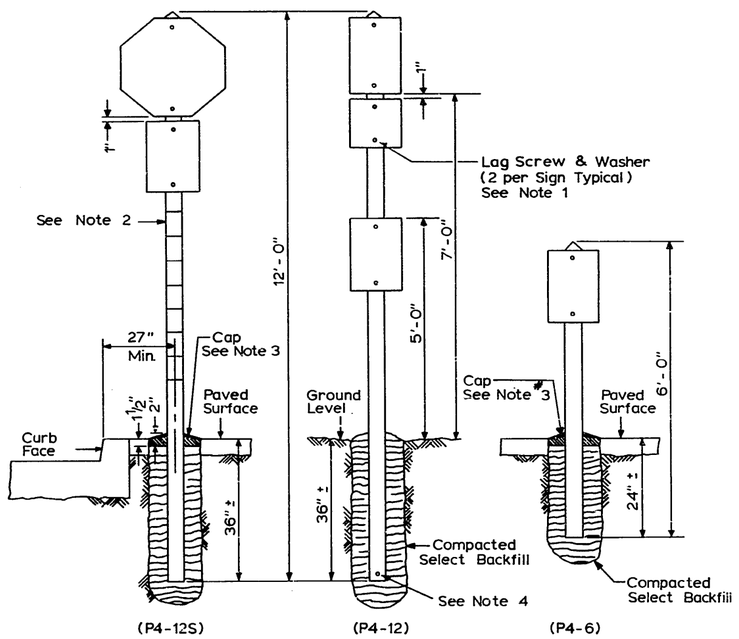

Notes:

1. 3¼ x 5/16" Galvanized or Plated Lag Screw & 3/8" I.D. x 1" O.D. Nylon Washer.
2. For "Yield" Signs: Painted Stripes Shall Face Toward the Approaching Traffic.
3. Cap shall be the Same Material as the Surrounding Surface. Refer to Standard Plan No. 624.
4. Install 30D Galv. Common Spike on the Face Side of Post Except When Concrete Paving Exists. Spike shall be 8" Above Bottom of Post and Shall Protrude 2" from Post.

Ref. Std. Spec. Sec. 8-21.

Do Not Scale

APPROVED BY THE BOARD OF PUBLIC WORKS 10/11 19 76 CHAIRMAN ATTEST: EXEC SECRETARY	CITY OF SEATTLE DEPARTMENT OF ENGINEERING	Traffic Sign & Wood Post Installation

Standard Plan No. 621

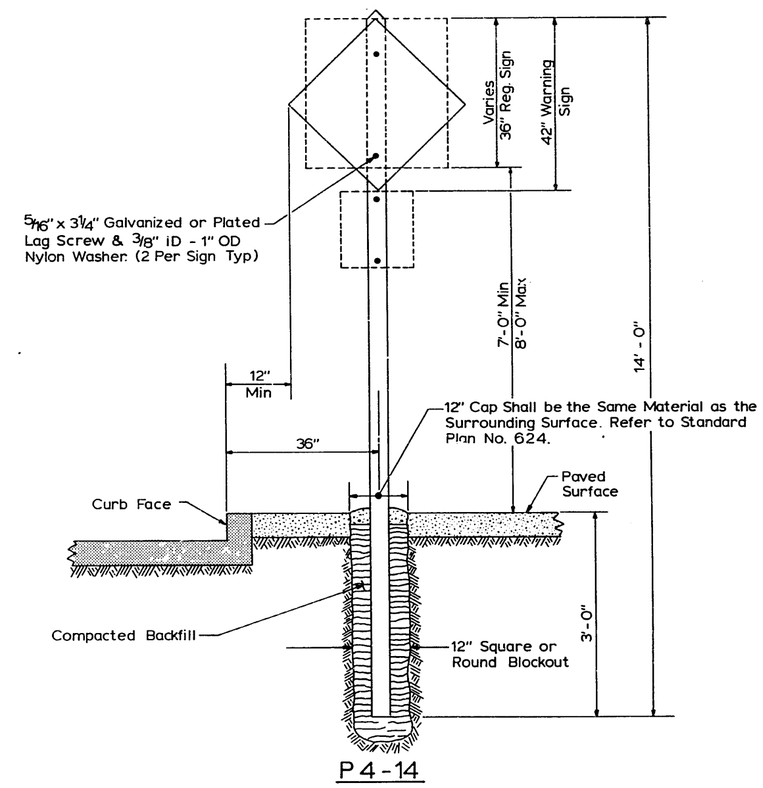

Note:

Sign Shall be Attached With Top Edge of Sign Flush With Top of Square Section of Post.

Ref Std Spec Sec 8-21.

Do Not Scale

APPROVED BY THE BOARD OF PUBLIC WORKS 10/31 19 73 CHAIRMAN ATTEST: EXEC SECRETARY	CITY OF SEATTLE DEPARTMENT OF ENGINEERING	Traffic Sign & Wood Post Installation

Standard Plan No. 622

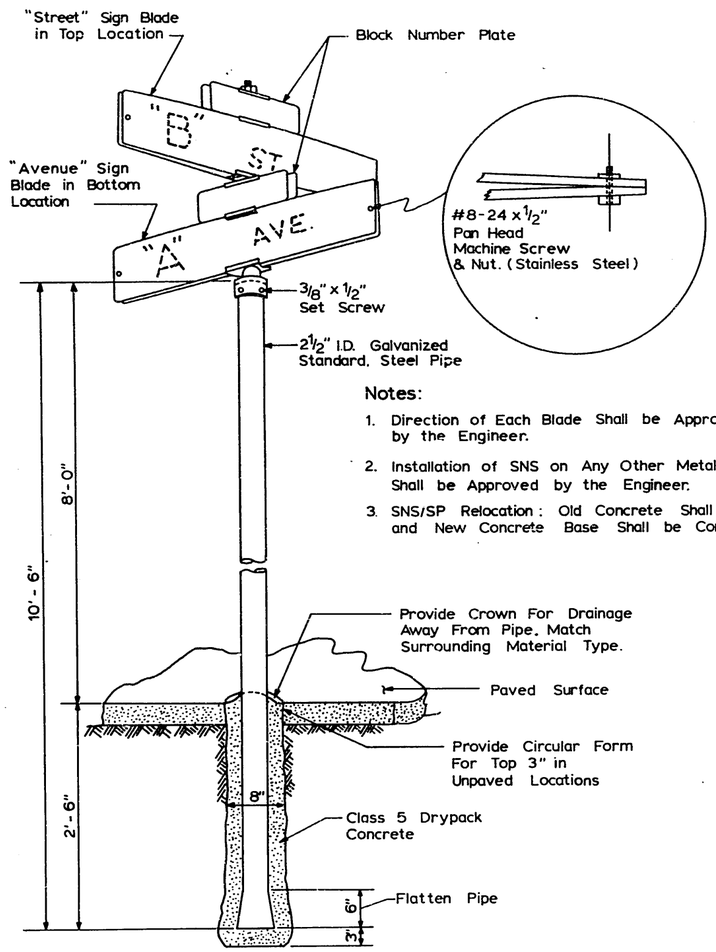

Notes:

1. Direction of Each Blade Shall be Approved by the Engineer.
2. Installation of SNS on Any Other Metal Pole Shall be Approved by the Engineer.
3. SNS/SP Relocation : Old Concrete Shall be Removed and New Concrete Base Shall be Constructed

Ref. Std. Spec. Sec. 8-21.

Do Not Scale

APPROVED BY THE BOARD OF PUBLIC WORKS 10/31 1956 CHAIRMAN ATTEST: EXEC SECRETARY	CITY OF SEATTLE DEPARTMENT OF ENGINEERING	Street Sign Installation

Standard Plan No. 623

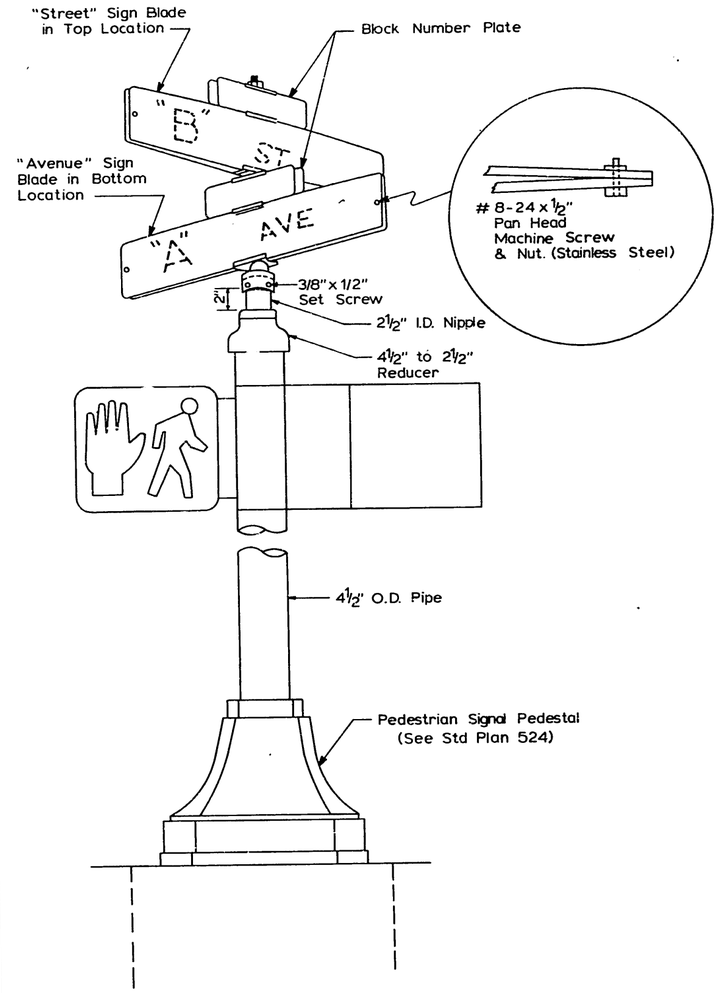

Ref. Std. Spec. Sec. 8-21.

APPROVED BY THE BOARD OF PUBLIC WORKS 10/31 1956 CHAIRMAN ATTEST: EXEC SECRETARY	CITY OF SEATTLE DEPARTMENT OF ENGINEERING	Street Name Sign Pedestal Installation

Standard Plan No. 624

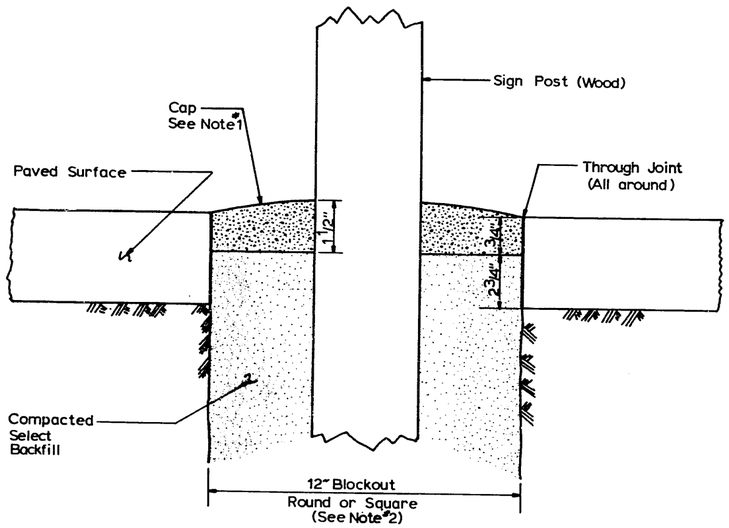

Notes:

1. Cap shall be Made of the Same Material as the Surrounding Paved Surface.
2. Blockouts shall be Provided for Post Locations where New Concrete Pavement (Sidewalk, Roadway, etc.) is being Installed.
3. Where Post is Being Installed in Existing Paved Areas, Hole in Paved Surface shall Not Exceed 12" Nominal Diameter.

Ref. Std. Spec. Sec. 8-21.

Do Not Scale

APPROVED BY THE BOARD OF PUBLIC WORKS 10/31, 19 86 CHAIRMAN ATTEST: EXEC SECRETARY	CITY OF SEATTLE DEPARTMENT OF ENGINEERING	Post Cap

Standard Plan No. 625

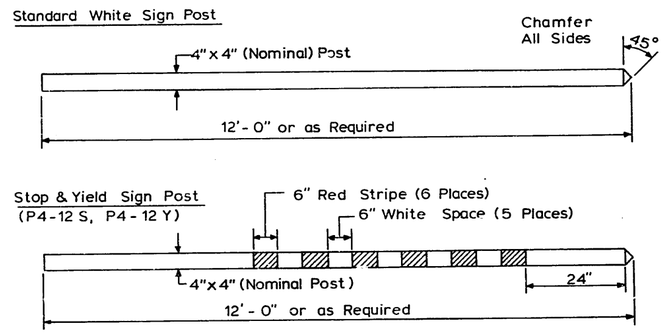

Note:

1. Paint Red Stripes On All Four Sides For "STOP" Sign Installation, One Side Only For "YIELD" Sign Installations.
2. For "YIELD" Sign Installation, Striped Side Shall Be Facing Approaching Traffic.

Ref. Std. Spec. Sec. 8-21.

Do Not Scale

APPROVED BY THE BOARD OF PUBLIC WORKS 10/31, 1986 CHAIRMAN ATTEST: EXEC. SECRETARY	CITY OF SEATTLE DEPARTMENT OF ENGINEERING	Wood Traffic Sign Posts

Standard Plan No. 626

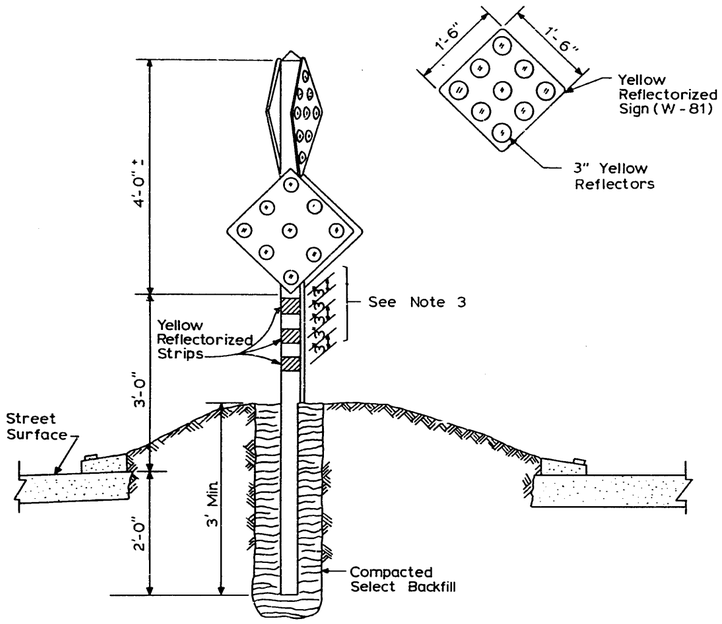

(P4-9)

Notes:

1. In the Case Where All Approaches of the Intersection Are Primarily at the Same Level, with Respect to Grades (Less Then 3%); The Lower Set of Signs Will Face the Higher Volume Street.
2. In the Case Where An Approach Has A Grade Larger Then 3%, The Higher Signs Will Face the Approach with the Highest Grade to Allow Better Sight Distance.
3. Place Three(3) or Four(4) - (3" × 3") Yellow Reflectorized Strips on the 4 Post Faces.

Ref. Std. Spec. Sec. 8-21.

Do Not Scale

APPROVED BY THE BOARD OF PUBLIC WORKS 10/31 19 82 CHAIRMAN ATTEST EXEC. SECRETARY	CITY OF SEATTLE DEPARTMENT OF ENGINEERING	Object Marker Installation

Standard Plan No. 700

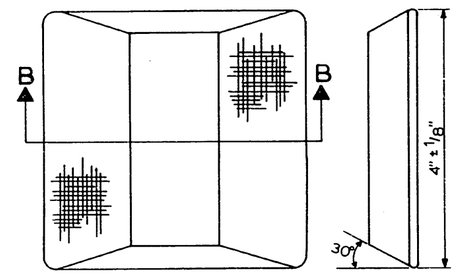

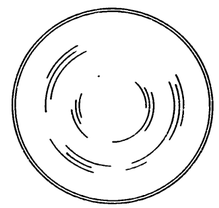

Direction of Traffic

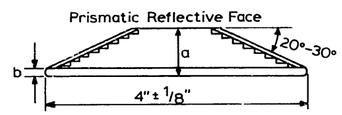

SECTION B-B

4" Prismatic Reflective Marker

Lane Marker-Type 2

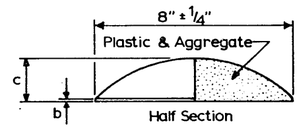

Type 700B

a = 5/8" ± 1/8"
b = 1/8" ± 1/16"
c = 1 5/8" ± 1/8"

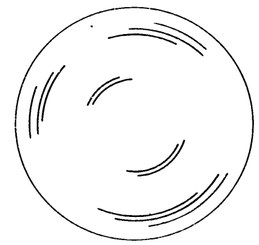

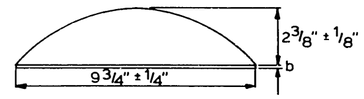

Type 700D

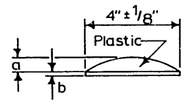

Lane Marker-Type 1

Ref. Std. Spec. Sec. 8-21

Do Not Scale

APPROVED BY THE BOARD OF PUBLIC WORKS 10/31 19 82 CHAIRMAN ATTEST EXEC. SECRETARY	CITY OF SEATTLE DEPARTMENT OF ENGINEERING	Traffic Buttons and Lane Markers

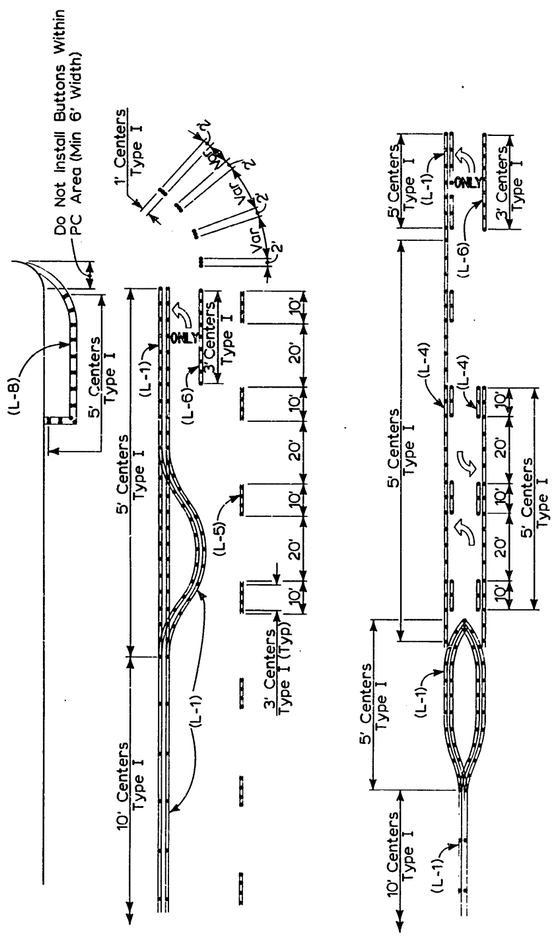

Notes:
Traffic Buttons Shall Be Installed To Conform With Type Of Pavement Marking (Designated As L-1, L-4, L-5, Etc.), And Are To Be Arranged And Spaced As Shown On This Drawing. Color Of Traffic Buttons Is To Match Color Of Pavement Markings. Traffic Buttons Shall Be Installed Prior To Any Paint Line Installation.

Typical Type I Traffic Button (4" Traffic Button) Installation Details

Ref. Std. Spec. Sec. 8-08.

Do Not Scale

APPROVED BY THE BOARD OF PUBLIC WORKS 10/31 19 82 CHAIRMAN ATTEST: EXEC SECRETARY	CITY OF SEATTLE DEPARTMENT OF ENGINEERING	Channelization Standard

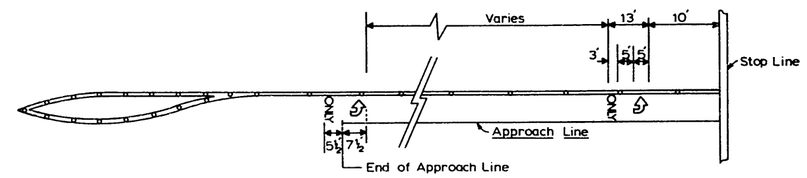

Typical Left Turn Channelization

Number of Legend Sets Required Based on the Length of Approach Lines.

Approach Line Length	Legend Sets
Less Than 50ft.	1 Set at X-walk end of pocket
50ft — 125ft	2 Sets
125ft — 300ft	3 Sets (Second Legend located midway between first and last Legends)
Over — 300ft	Additional sets spaced at approx. 100ft. intervals between first and last sets.

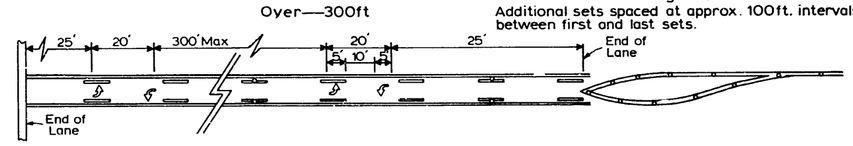

Typical Two Way Left Turn Lanes

Number of Legend Sets Required is Based Upon the Length of Typical Two Way Left Turn Lanes

Less Than 50ft.	1 Set (Centered between both ends of lane)
50ft — 300ft.	2 Sets
Over — 300ft.	3 Sets (Second Legend located midway between first and last Legends)
	Additional sets spaced at approx. 300ft. intervals.

Legend Placement

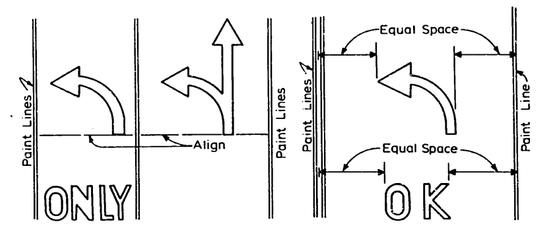

Legends in adjacent lanes shall be aligned as shown.

Legends shall be centered within the lane to which they apply, as shown.

Legend Combinations

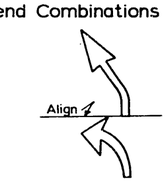

Oblique Left and 90° Left Legends and Oblique Right and 90° Right Legends May Be Combined as Shown.

Ref. Std. Spec. Sec. 8-22.

APPROVED BY THE BOARD OF PUBLIC WORKS 10/31 19 82 CHAIRMAN ATTEST: EXEC SECRETARY	CITY OF SEATTLE DEPARTMENT OF ENGINEERING	Typical Left Turn Channelization and Legend Placement

Standard Plan No. 712

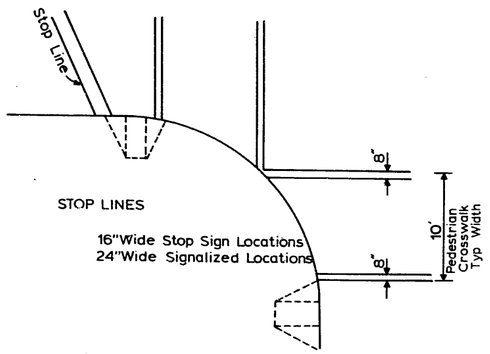

TYPICAL PEDESTRIAN CROSSWALKS & STOP LINES

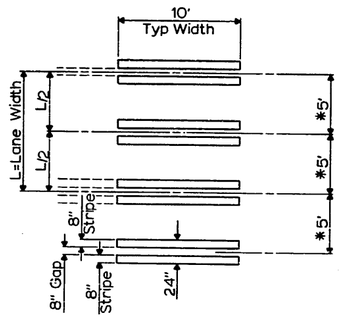

TYPICAL LADDER PEDESTRIAN CROSSWALK

* Where Traffic Lane Lines are not used Ladder Bars Shall be 5' center to center, Beginning at the marked centerline of the roadway.

Note:
1. Exact Location of Crosswalk Lines and Stop Lines Shall be Designated by the Engineer.

TYPICAL CROSSWALK & STOP LINE INSTALLATION DETAILS.

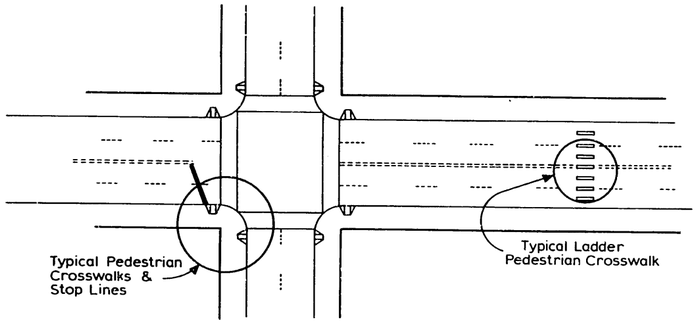

Ref. Std. Spec. Sec. 8-22

APPROVED BY THE BOARD OF PUBLIC WORKS 10/31, 1986 CHAIRMAN ATTEST: EXEC SECRETARY	CITY OF SEATTLE DEPARTMENT OF ENGINEERING	Typical Crosswalk And Stop Line Installation Details

Standard Plan No. 720a

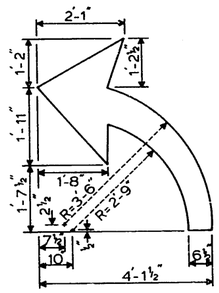

Left Arrow

L-20

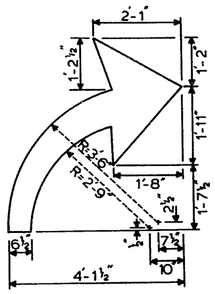

Right Arrow

L-21

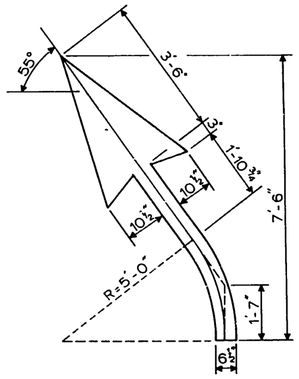

Oblique Left Arrow

L-18

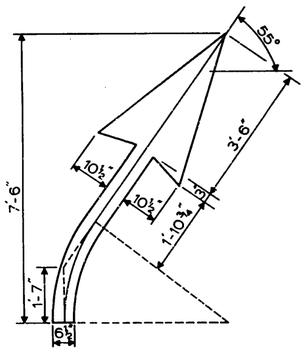

Oblique Right Arrow

L-19

Ref. Std. Spec. Sec. 8-22.

APPROVED BY THE BOARD OF PUBLIC WORKS 10/31, 1986 CHAIRMAN ATTEST: EXEC SECRETARY	CITY OF SEATTLE DEPARTMENT OF ENGINEERING	Pavement Markings Legends/Symbols

Standard Plan No. 720b

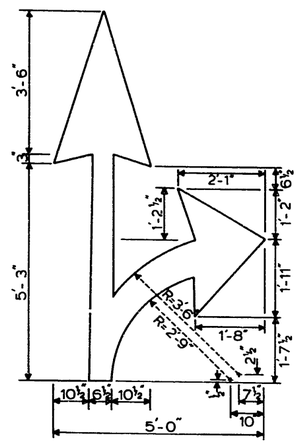

Right & Through Arrows

L-24

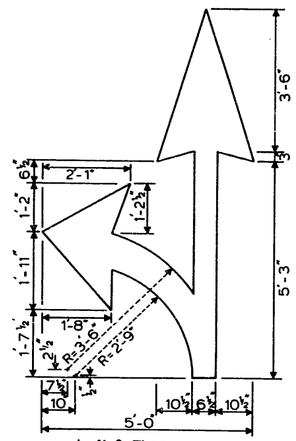

Left & Through Arrows

L-23

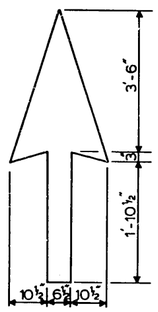

Through Arrow

L-22

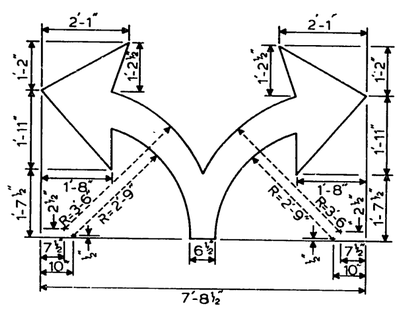

Left & Right Arrows

L-17

Ref. Std. Spec. Sec. 8-22.

APPROVED BY THE BOARD OF PUBLIC WORKS 10/31, 1958 CHAIRMAN ATTEST: EXEC SECRETARY	CITY OF SEATTLE DEPARTMENT OF ENGINEERING	Pavement Markings Legends / Symbols

Standard Plan No. 721

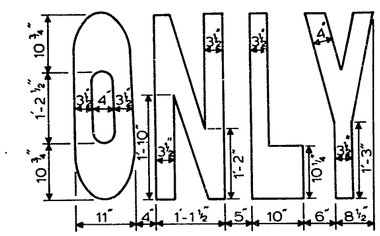

"ONLY" Legend

L-25

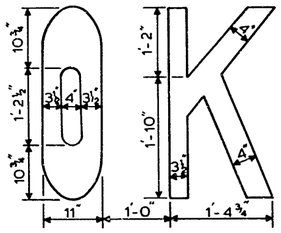

"OK" Legend

L-26

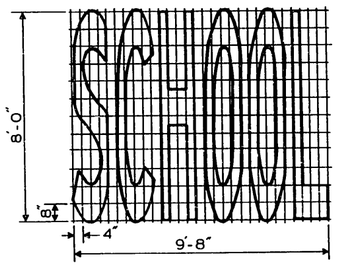

"SCHOOL" Legend

L-35

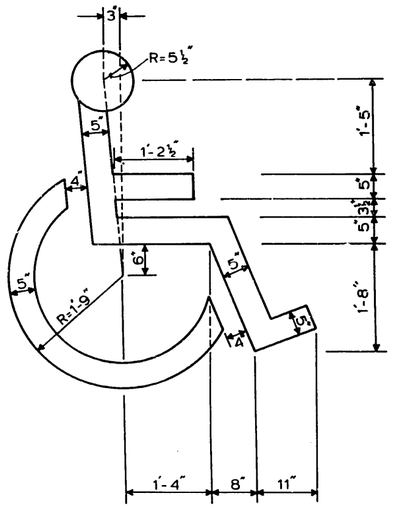

Disabled Person Symbol

L-29

Ref. Std. Spec. Sec. 8-22

APPROVED BY THE BOARD OF PUBLIC WORKS 10/31, 1958 CHAIRMAN ATTEST: EXEC SECRETARY	CITY OF SEATTLE DEPARTMENT OF ENGINEERING	Pavement Markings Legends / Symbols

Standard Plan No. 722

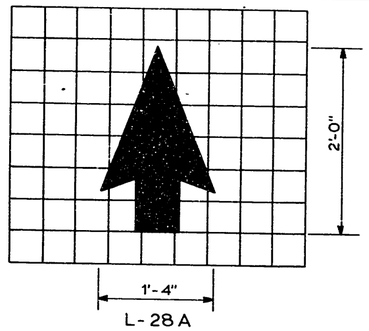

L-28 A

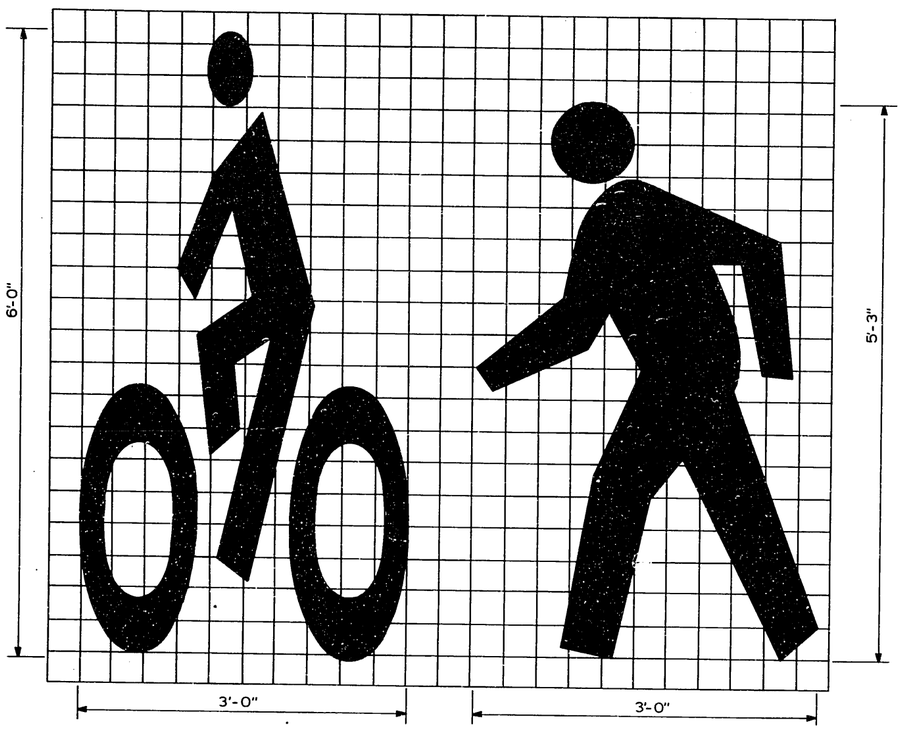

L - 28
(includes L - 28 A)

L - 27

Ref. Std. Spec. Sec. 8-21.

APPROVED BY THE BOARD OF PUBLIC WORKS 10/31, 19[illegible] CHAIRMAN ATTEST: [illegible] EXEC SECRETARY	CITY OF SEATTLE DEPARTMENT OF ENGINEERING	Bicyclist & Pedestrian Symbols

Standard Plan No. 800

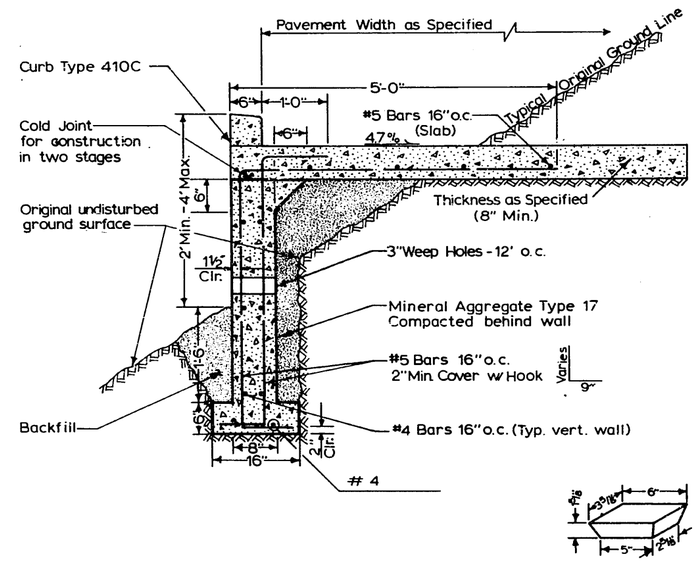

Notes:

1. Base of Support Wall to be bearing on firm undisturbed earth.
2. Back form for Support Wall may be omitted and concrete placed against native earth when ground conditions permit.
3. When construction of alley pavement is not integral with Support Wall, Shear Keys shall be installed 18" on centers.
4. Concrete for Support Wall shall be Class 6(1½).
5. Reinforcing steel ASTM A615, Grade 60.

Beveled block for forming Shear Key in wall section to be made from standard 2"x4"x6" wood or other suitable material. (See Note 3)

Ref. Std. Spec. Sec. 5-06.

Do Not Scale

APPROVED BY THE BOARD OF PUBLIC WORKS 10/31, 19[illegible] CHAIRMAN ATTEST: [illegible] EXEC SECRETARY	CITY OF SEATTLE DEPARTMENT OF ENGINEERING	Support Wall

Standard Plan No. 801

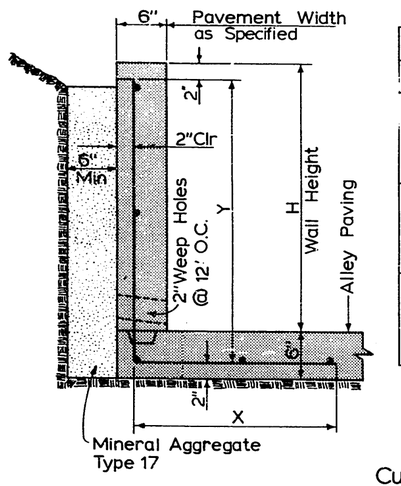

Bar List			
H	X	Y	Diagram
2'	2'-6"	2'-2"	4 Ties - #4; 4 @ 18" O.C.
3'	2'-6"	3'-2"	5 Ties - #4; 4 @ 18" O.C.
4'	4'-4"	4'-2"	7 Ties - #4; 4 @ 12" O.C.

Curb Wall
No Scale

Notes:

1. Match Wall Through Joints with Pavement Through Joints.
2. Conc Class 6(1 1/2) For Curb Wall.
3. Max Height 4' (Min Pavement width is 12' for Walls higher than 3').
4. Back Form for Curb Wall may be omitted and Conc placed against Native Earth when ground conditions permit.
5. When construction of Wall is not integral with Alley Pavement, Shear Key indentations spaced 18" O C shall be installed in the Pavement Slab.
6. Reinf. steel, ASTM A615, GR. 60.

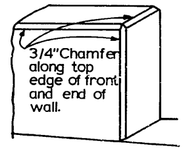

Curb Wall Detail
No Scale

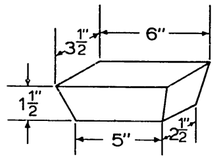

Beveled Block for Forming Shear Key in Wall Section to be Made From Std 2"x4"x6" Wood or Other Suitable Material See Note 5.

Shear Key Form
No Scale

Ref. Std. Spec. Sec. 5-06

APPROVED BY THE BOARD OF PUBLIC WORKS 10/31, 19 76 CHAIRMAN ATTEST: EXEC SECRETARY	CITY OF SEATTLE DEPARTMENT OF ENGINEERING	Curb Wall