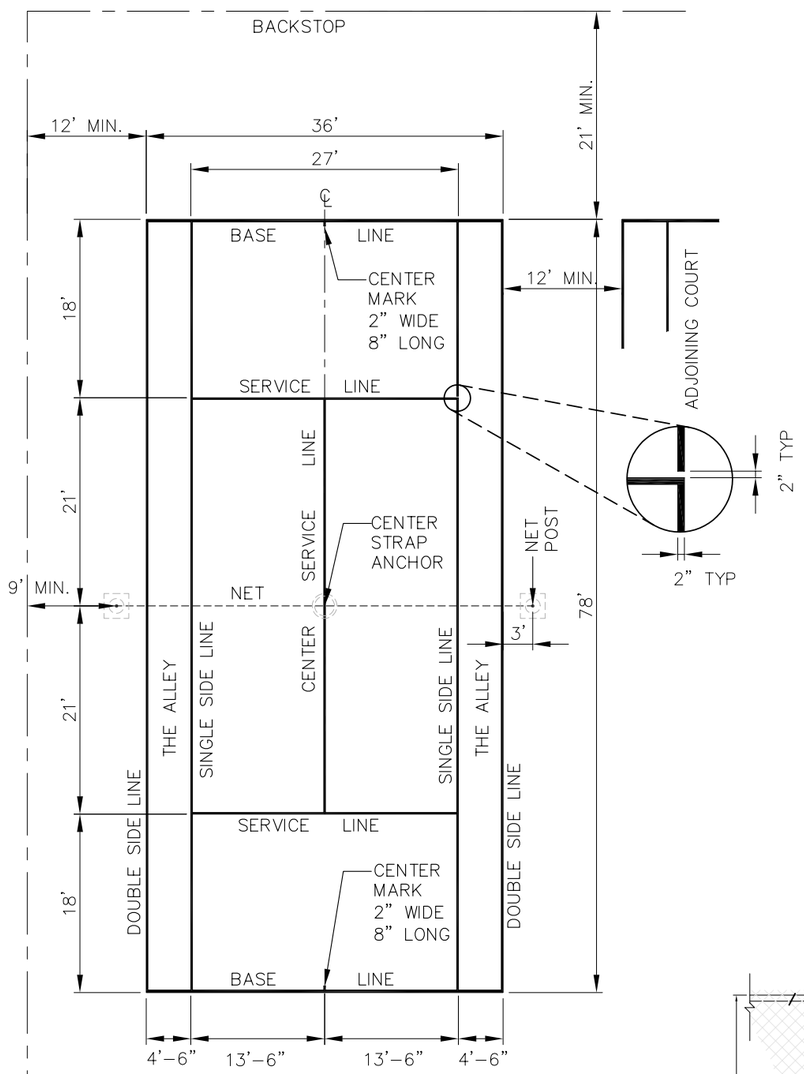

NOTE:
1. ALL DIMENSIONS ARE TO THE OUTSIDE EDGE OF LINES.
2. ALL PLAYING LINES ARE 2" IN WIDTH EXCEPT THE BASE LINES ARE 3" IN WIDTH.

1 COURT STRIPPING LAYOUT PLAN
NOT TO SCALE

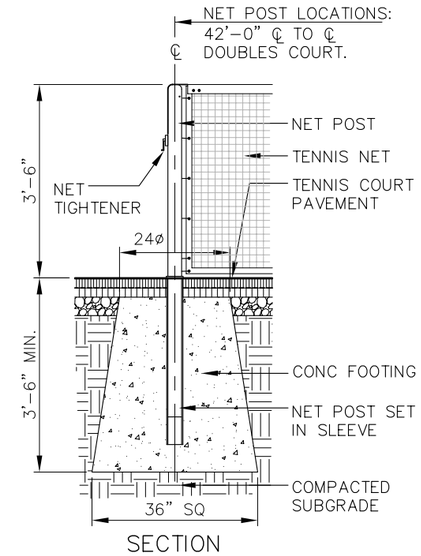

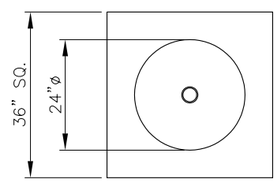

FOOTING PLAN

3 NET END POST INSTALLATION
NOT TO SCALE

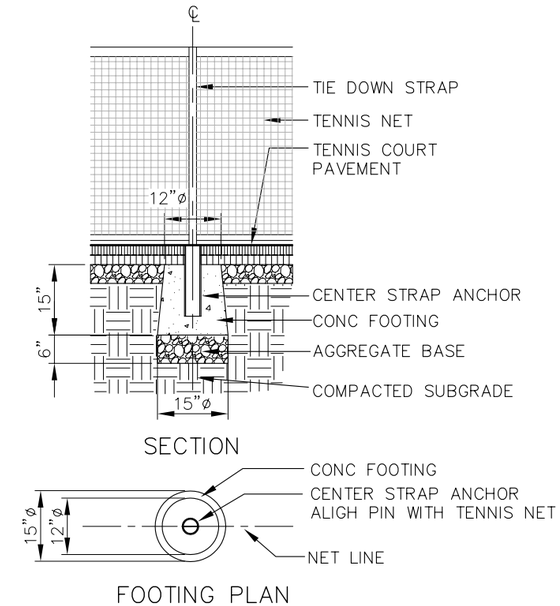

5 NET CENTER POST INSTALLATION
NOT TO SCALE

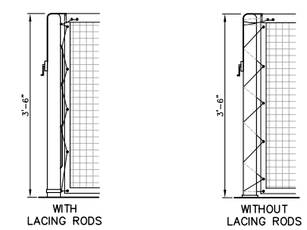

6 NET LACING OPTIONS
NOT TO SCALE

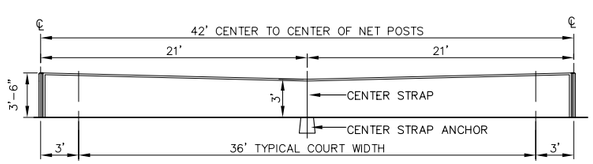

NOTE:
THE NET SHOULD BE INSTALLED WITH A RECOMMENDED TENSION OF 450 LBS. FOR RECREATIONAL COURTS & 550 LBS FOR PROFESSIONAL COURTS

2 TYPICAL NET INSTALLATION
NOT TO SCALE

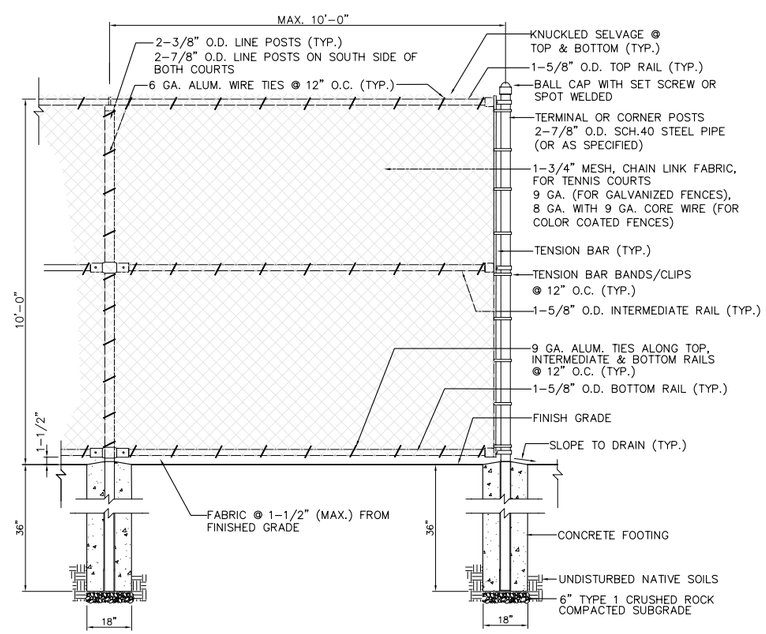

4 TENNIS COURT CHAIN-LINK FENCING
NOT TO SCALE

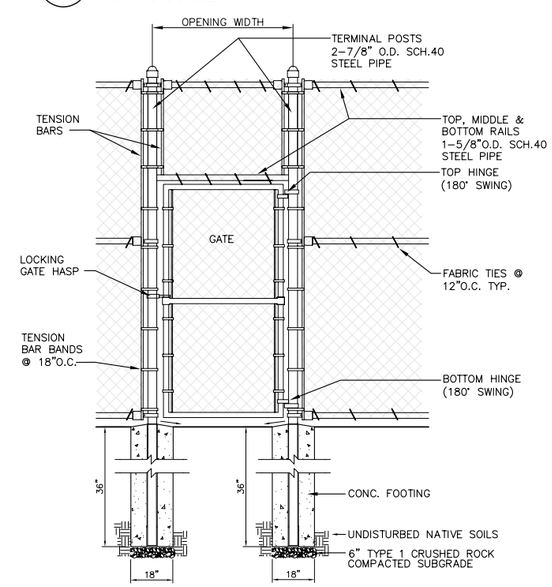

7 CHAIN-LINK GATE
NOT TO SCALE

>>>>CAUTION<<<<
CALL BEFORE YOU DIG!

NOT LESS THAN TWO OR MORE THAN TEN BUSINESS DAYS PRIOR TO COMMENCING EXCAVATION OR DEMOLITION. SECURE THE SERVICES OF A COMMERCIAL UNDERGROUND UTILITIES LOCATOR SERVICE TO IDENTIFY BELOW-GROUND IMPROVEMENTS THAT MAY NOT BE INDICATED ON THE DRAWINGS. FOR IRRIGATION SYSTEMS, CALL SEATTLE PARKS PLUMBING SHOP (206 684 7070)

>>800 424 5555<<

NO.	REVISION – AS BUILT	DATE
3		
2		
1		

REVIEWED: PARK ENGINEER DATE

All work done in accordance with the City of Seattle Standard Plans and Specifications in effect on the date shown above, and supplemented by Special Provisions.

SEATTLE PARKS AND RECREATION

FACILITY NAME

PROJECT NAME

TENNIS COURT FENCE & NET DETAILS

DESIGNED X
DRAWN X
CHECKED X
DATE X
SHEET X OF X
ORDINANCE NO.
CONTRACT NO.
SCALE X

Sht. No.