GENERAL NOTES:

- PLACE SIGNS MIN. 24" FROM FACE OF CURB TO FRONT OF SIGN POST (TYP.) (SEE PLANS FOR EXACT SIGN PLACEMENT)
- ALL SIGNS SHALL BE ALUMINUM
- SIGN #1 BARRIER FREE ACCESS PARKING (#R7-801) 12"x18" BLUE/WHT.
- SIGN #2 VAN ACCESSIBLE BARRIER FREE PARKING (#R7-801 W/ VAN) 12"x18" BLUE/WHT.

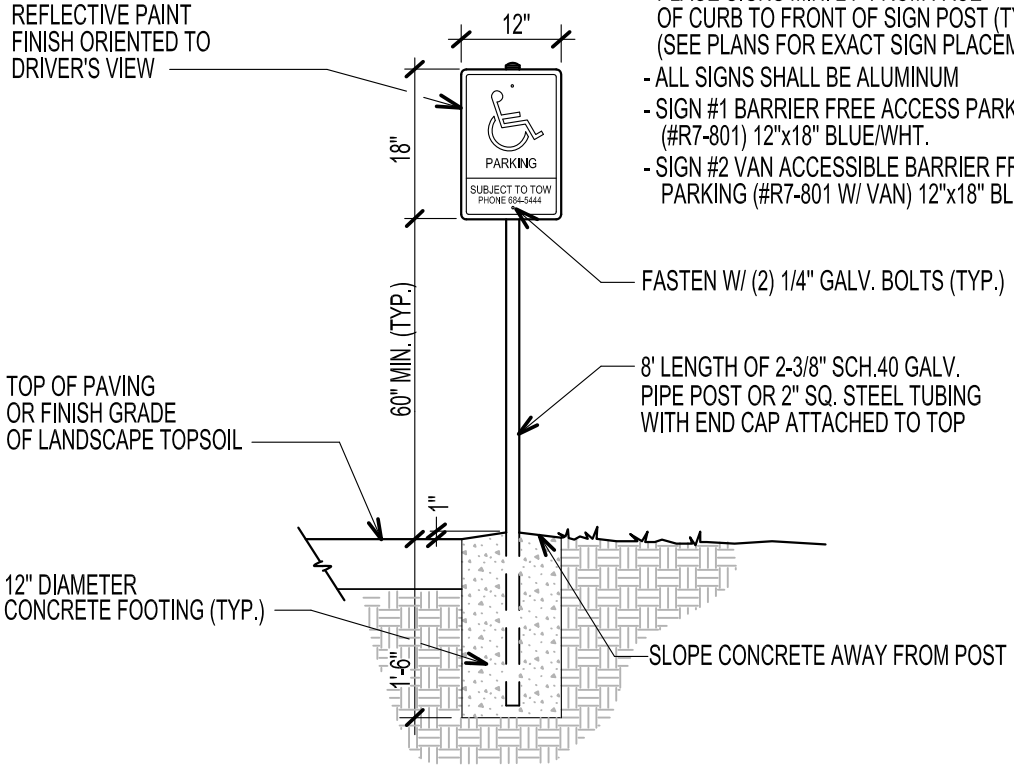

TYPICAL ADA PARKING SIGN

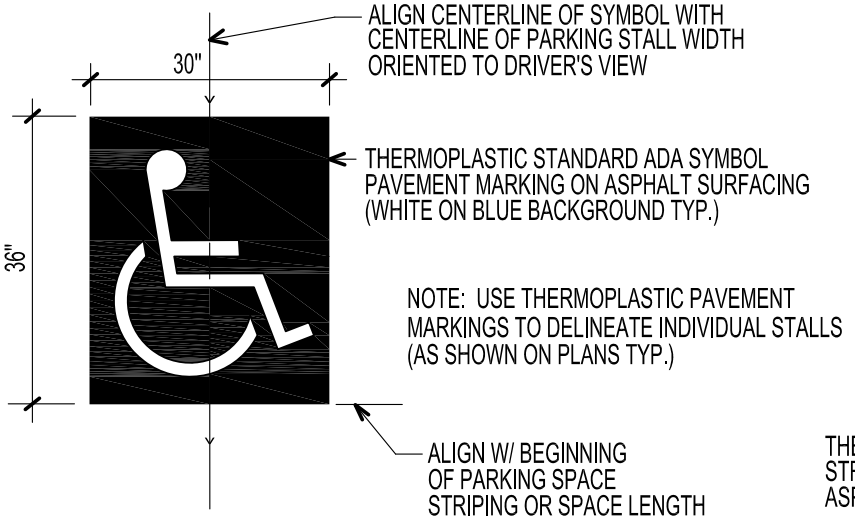

ADA STALL SYMBOL

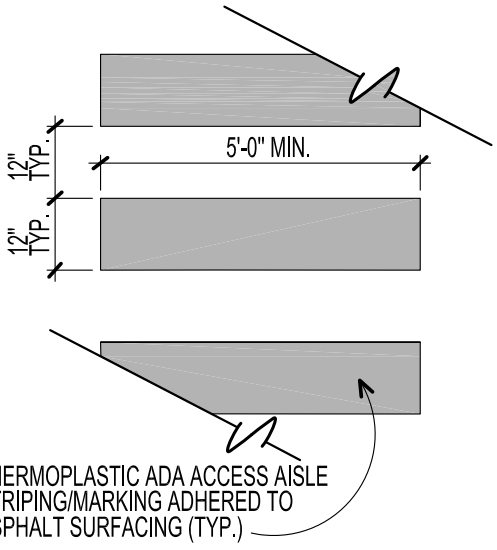

ADA ACCESS ISLE STRIPING

City of Seattle Department of Parks & Recreation	**ADA SIGNAGE, LOGO & STRIPING DETAILS** **STD. DETAIL NO. 10 14 00.29**