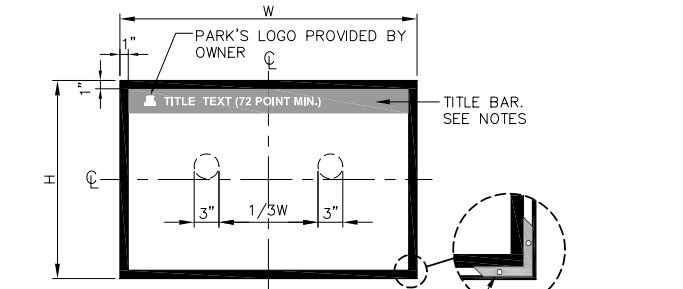

FRAME PLAN

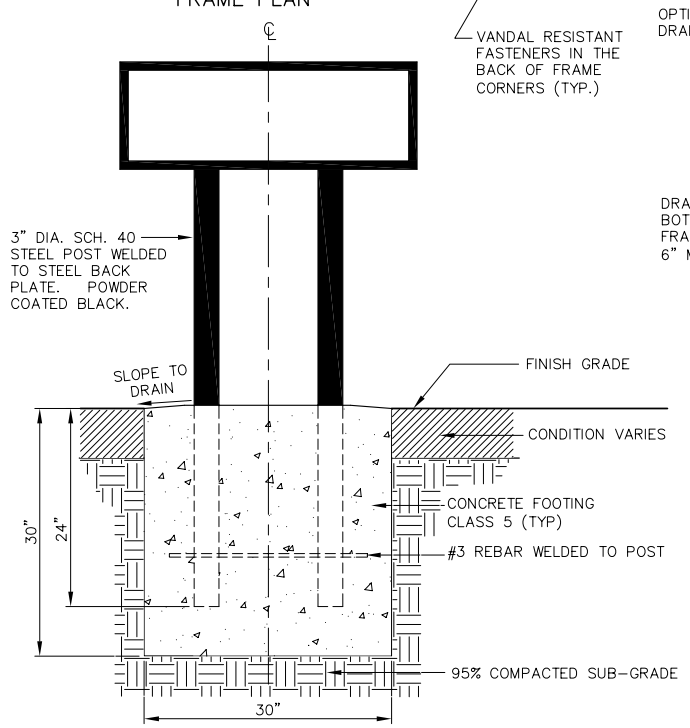

FRONT ELEVATION
EMBEDMENT FOOTING METHOD

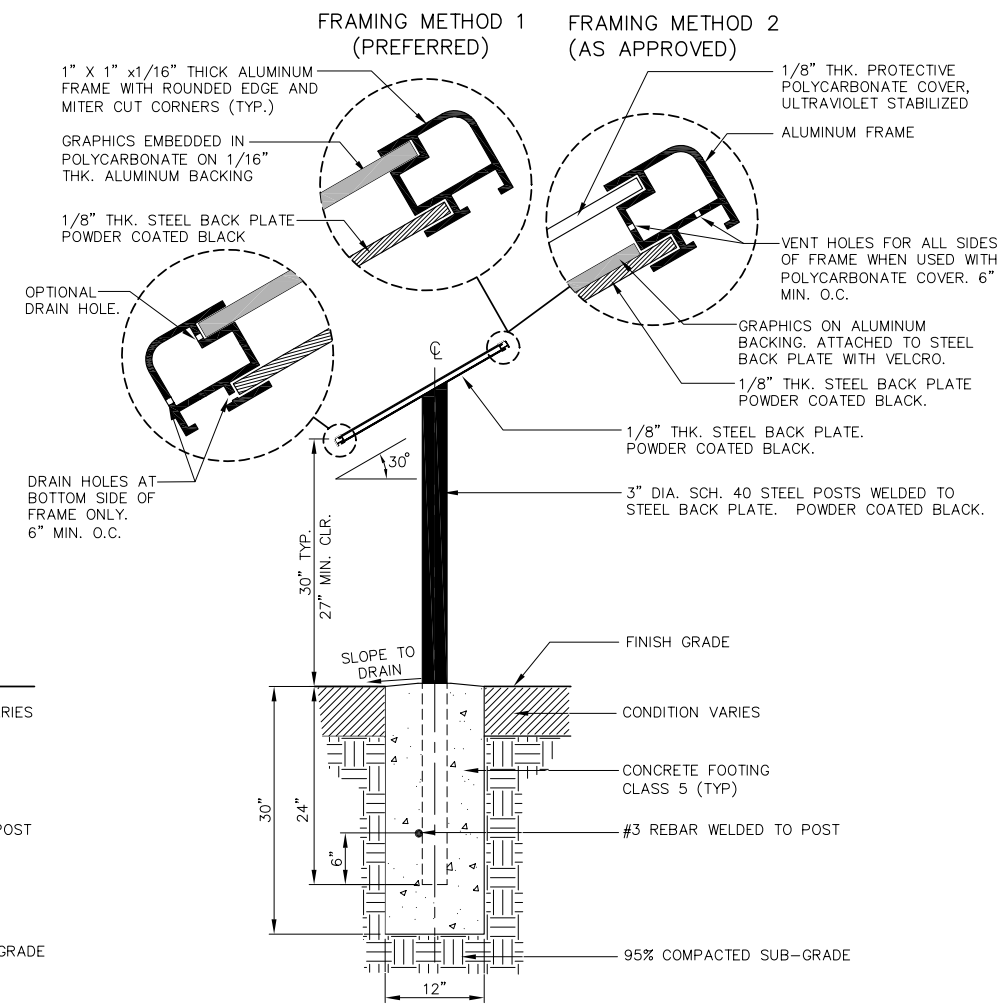

SIDE ELEVATION
EMBEDMENT FOOTING METHOD

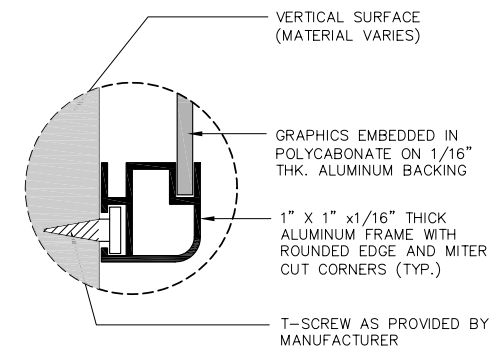

SIDE ELEVATION
VERTICAL SURFACE MOUNT METHOD 1
(PREFERRED)

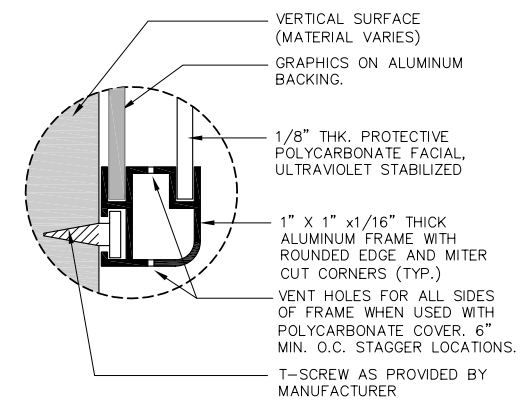

SIDE ELEVATION
VERTICAL SURFACE MOUNT METHOD 2
(AS APPROVED)

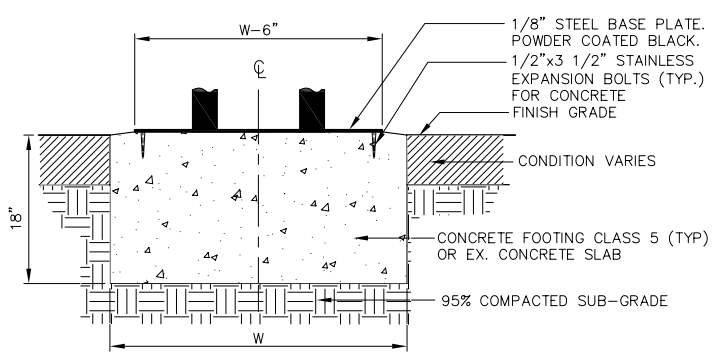

FRONT ELEVATION
BOLT DOWN FOOTING METHOD

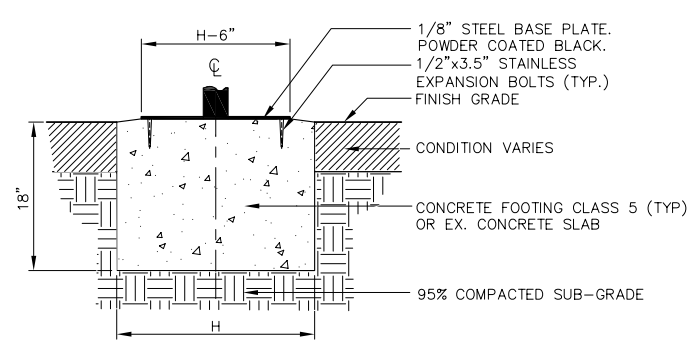

SIDE ELEVATION
BOLT DOWN FOOTING METHOD

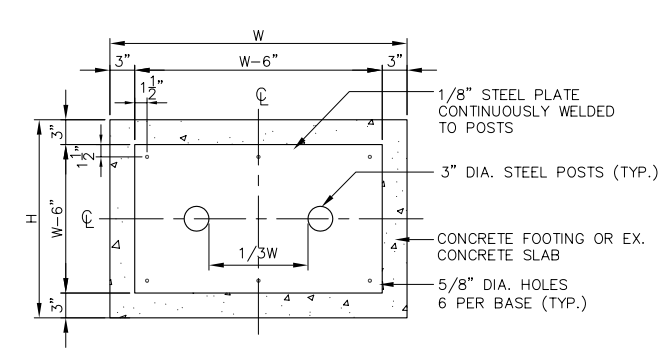

FOOTING PLAN
BOLT DOWN FOOTING METHOD

GENERAL NOTES:

1. PANEL SIZE (WxH): 24"x18", 24"x24", 36"x24", 42"x24". (OR CUSTOM SIZE AS APPROVED.)
2. NO FIELD WELDING.
3. CONTRACTOR SHALL ENSURE THAT DRAIN/VENT HOLES ARE DRILLED AS SPECIFIED.
4. CONTRACTOR / OWNER SHALL ENSURE THAT THE GRAPHIC PANEL TYPE MEETS THE SPECIFICATIONS.
5. DELIVER THE FOLLOWING ITEMS TO THE OWNER: FRAME TOUCH UP PAINT, EXTRA VANDAL-RESISTANT FASTENERS AND BIT/TOOL REQUIRED TO INSTALL / REMOVE THE FASTENERS.
6. THE COMPLETE SYSTEM, EXCEPT CONCRETE FOOTING, IS AVAILABLE FROM SOLE SOURCE PROPRIETER: **ARTCRAFT DISPLAY GRAPHICS INC. #112-1533 BROADWAY ST., PORT CONQUITLAM, B.C., CANADA V3C 6P3. PHONE 1-800-994-9451. WWW.ARTCRFT.COM.** (OR APPROVED EQUAL.)
7. EQUAL PRODUCT SHALL BE VANDAL RESISTANT AND GRAFFITI RESISTANT. GRAPHIC PANEL SHALL BE REPLACEABLE, WATERPROOF AND NON-FADING. MATERIALS SHALL BE RECYCLABLE. PROVIDE 1400 DPI PRINTING PROCESS.
8. PROVIDE FINAL GRAPHIC FILES ON CD TO OWNER WITH RECORD DOCUMENT AT PROJECT CLOSE OUT.
9. PROVIDE TEN YEAR MANUFACTURER'S MATERIAL AND WORKMANSHIP WARRANTY ON ALL PRODUCTS.

NOTES TO GRAPHIC DESIGNER:

1. TITLE TEXT SHALL BE WHITE. TITLE BAR BACKGROUND COLOR SHALL BE PANTONE COLOR 562 C.
2. MINIMUM TEXT SIZE SHALL BE 72 POINT FOR TITLES, 18 POINT FOR BODY & 12 POINT FOR CAPTIONS.
3. INCLUDE PARK'S LOGO IN TITLE BAR PROVIDED BY OWNER.
4. ALL TEXT STYLE SHALL BE CLEAR AND LEGIBLE.
5. ALL CONTENT OF SIGN GRAPHICS SHALL BE APPROVED BY PARK'S PUBLIC INFORMATION OFFICE.

>>>>CAUTION - CALL 811<<<<
UTILITY NOTIFICATION CENTER BEFORE YOU DIG!
WWW.CALLBEFOREYOUDIG.ORG

NOT LESS THAN **2** OR MORE THAN **10** BUSINESS DAYS PRIOR TO COMMENCING EXCAVATION OR DEMOLITION, SECURE THE SERVICES OF A COMMERCIAL UNDERGROUND UTILITIES LOCATOR SERVICE TO IDENTIFY BELOW-GROUND IMPROVEMENTS THAT MAY NOT BE INDICATED ON THE DRAWINGS. ADDITIONALLY, TO REQUEST ON-SITE UNDERGROUND UTILITY SYSTEMS LOCATES, CALL **SPR INSPECTION REQUEST LINE @ (206) 684-7034.** REFER TO SECTIONS 02100 & 02120 OF THE SPECIFICATIONS FOR INSTRUCTIONS ON HOW TO PROCEED.

NO.	REVISION – AS BUILT	DATE
3		
2		
1		

REVIEWED: _____ PARK ENGINEER _____ DATE

All work done in accordance with the City of Seattle Standard Plans and Specifications in effect on the date shown above, and supplemented by Special Provisions.

SEATTLE PARKS AND RECREATION

FACILITY NAME

PROJECT NAME

INTERPRETIVE SIGN DETAILS

DESIGNED _____ DATE 11/13/06
DRAWN SH
CHECKED JN
SHEET X OF X
ORDINANCE NO. _____
CONTRACT NO. _____
SCALE NOT TO SCALE

Sht. No.