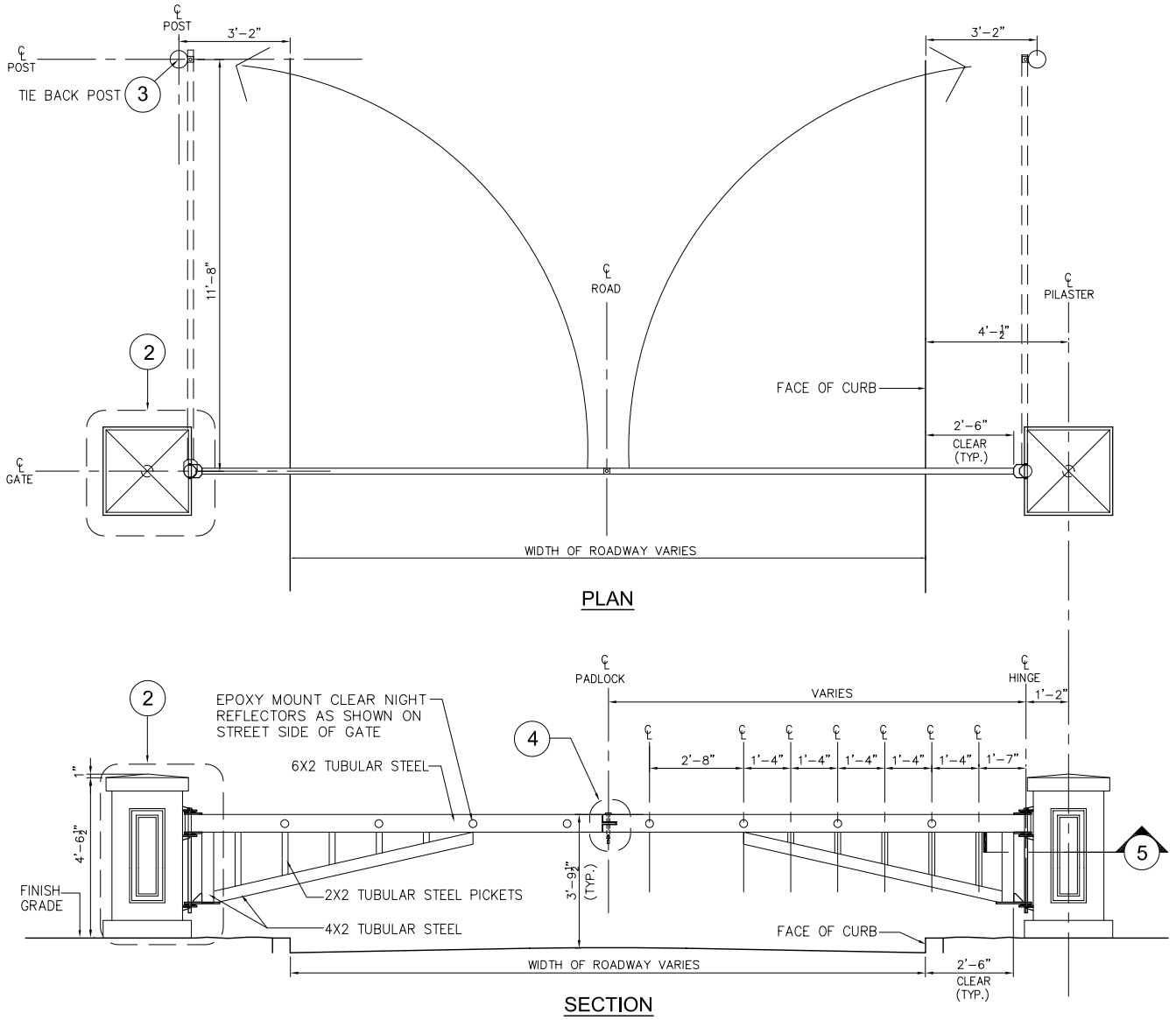

1 PARKS STANDARD SECURITY GATE (OPTIONAL)
N.T.S.

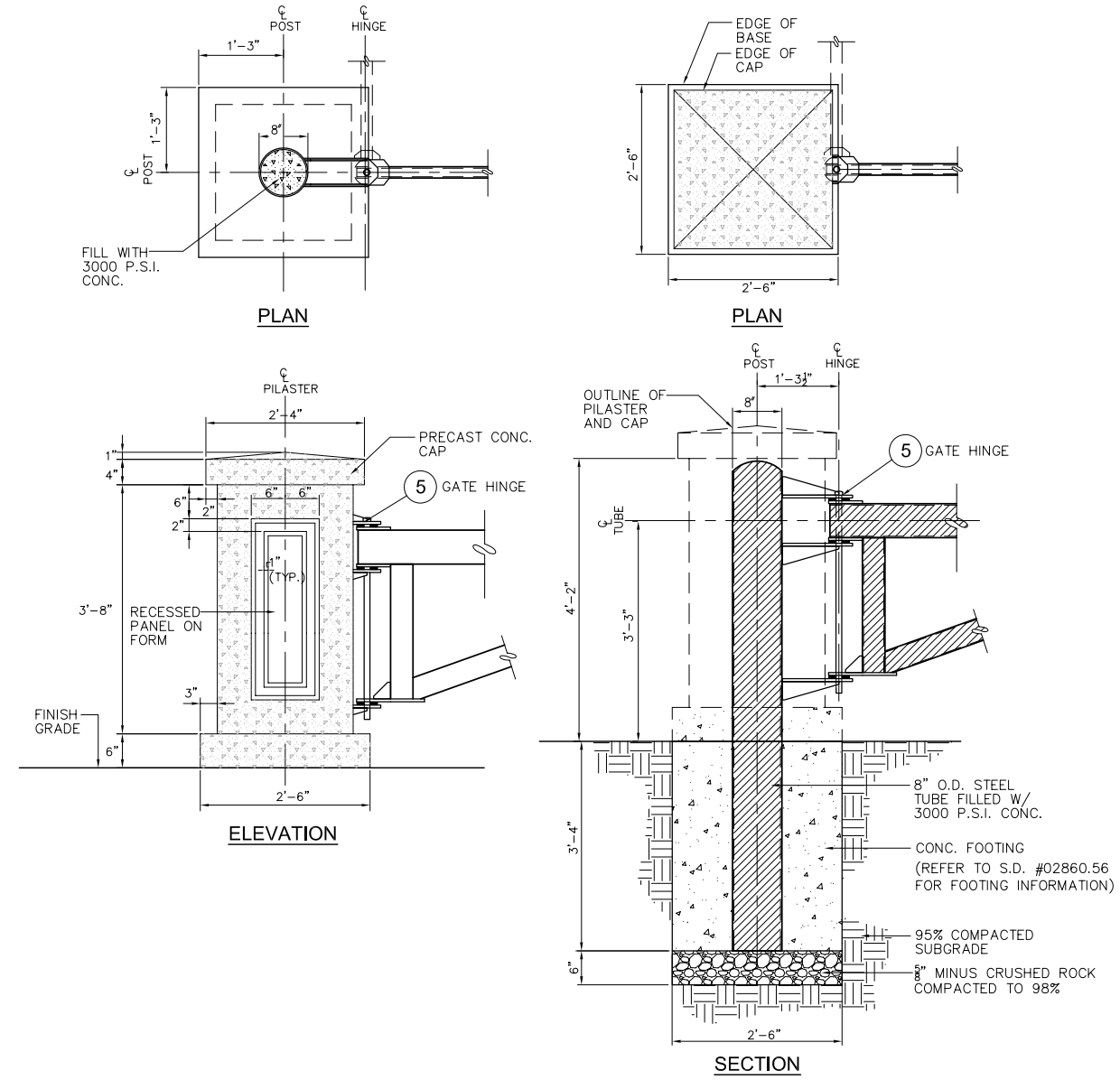

2 PILASTER SECTIONS
N.T.S.

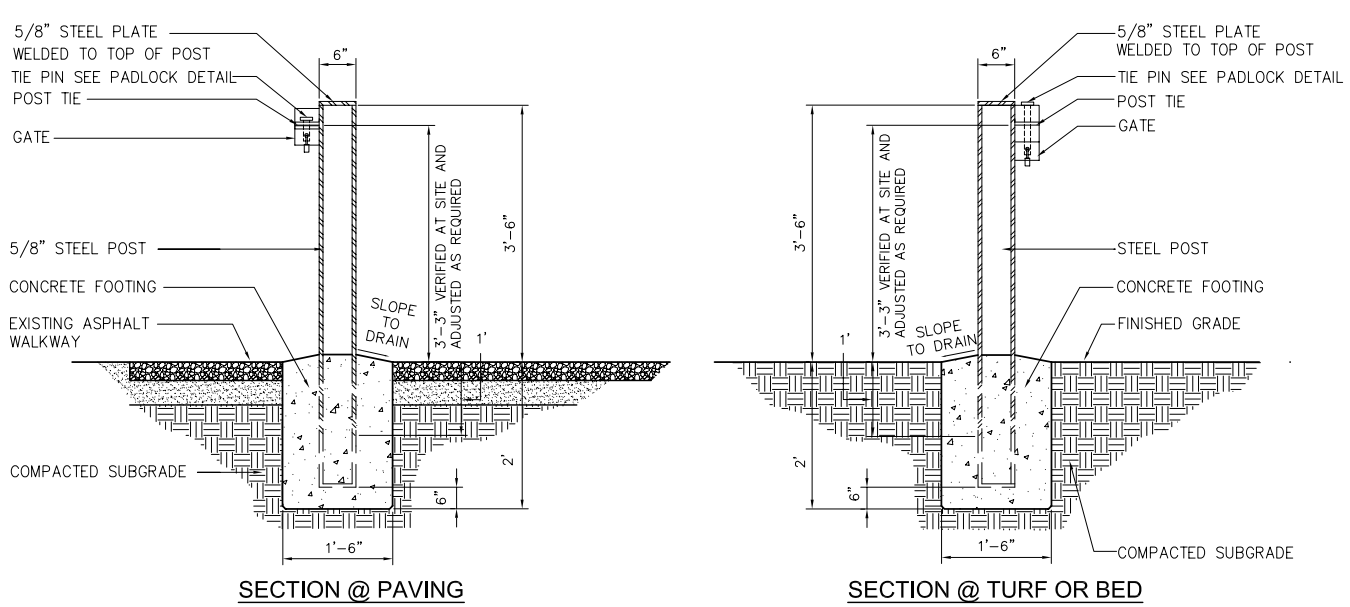

3 GATE TIE POSTS
N.T.S.

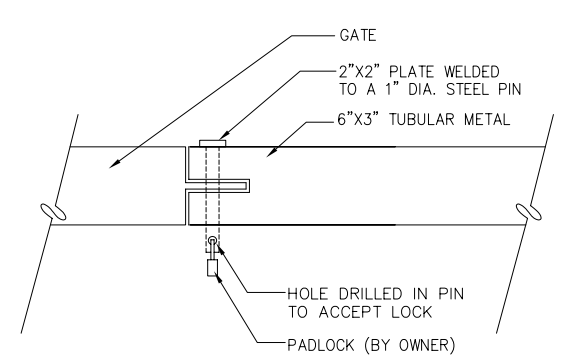

4 GATE LOCK SECTION
N.T.S.

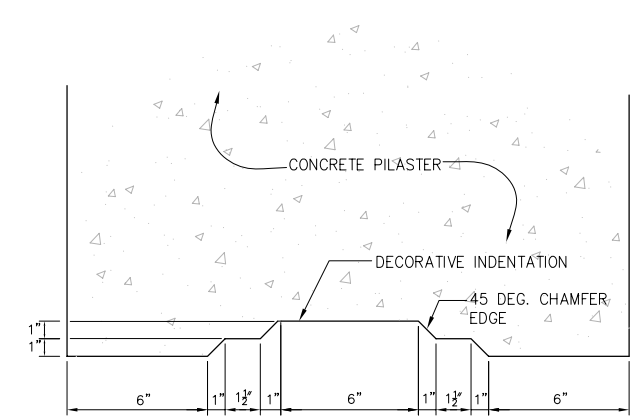

5 DECORATIVE FACE OF PILLAR
N.T.S.

>>>>CAUTION - CALL 811<<<<
UTILITY NOTIFICATION CENTER BEFORE YOU DIG!
WWW.CALLBEFOREYOUDIG.ORG

NOT LESS THAN **2** OR MORE THAN **10** BUSINESS DAYS PRIOR TO COMMENCING EXCAVATION OR DEMOLITION, SECURE THE SERVICES OF A COMMERCIAL UNDERGROUND UTILITIES LOCATOR SERVICE TO IDENTIFY BELOW-GROUND IMPROVEMENTS THAT MAY NOT BE INDICATED ON THE DRAWINGS. ADDITIONALLY, TO REQUEST ON-SITE UNDERGROUND UTILITY SYSTEMS LOCATES, CALL **SPR INSPECTION REQUEST LINE @ (206) 684-7034.** REFER TO SECTIONS 02100 & 02120 OF THE SPECIFICATIONS FOR INSTRUCTIONS ON HOW TO PROCEED.

GENERAL NOTES:

1. ALL COMPONENTS SHALL BE HOT DIPPED GALVANIZED AFTER FABRICATION.
2. GRIND ALL WELDS SMOOTH AFTER FABRICATION, NO FIELD WELDING SHALL BE ALLOWED.
3. CONCRETE PILASTER SHALL BE FORMED AND POURED IN PLACE.
4. ACID WASH FINISH WITH 1LB./C.Y. LAMP BLACK FOR AGED COLOR LOOK.
5. OPTIONS: POWDER COATED FINISH, COLOR TO BE DARK GREEN.

NO.	REVISION – AS BUILT	DATE
3		
2		
1		

REVIEWED: PARK ENGINEER DATE

All work done in accordance with the City of Seattle Standard Plans and Specifications in effect on the date shown above, and supplemented by Special Provisions.

SEATTLE PARKS AND RECREATION

FACILITY NAME

PROJECT NAME

PARKS STANDARD DOUBLE SECURITY GATE

DESIGNED CA/CL
DRAWN ET/SH
CHECKED JN
DATE 9/30/2010
DESIGN REVIEW
ORDINANCE NO.
CONTRACT NO.
SCALE NOT TO SCALE
SHEET X OF X