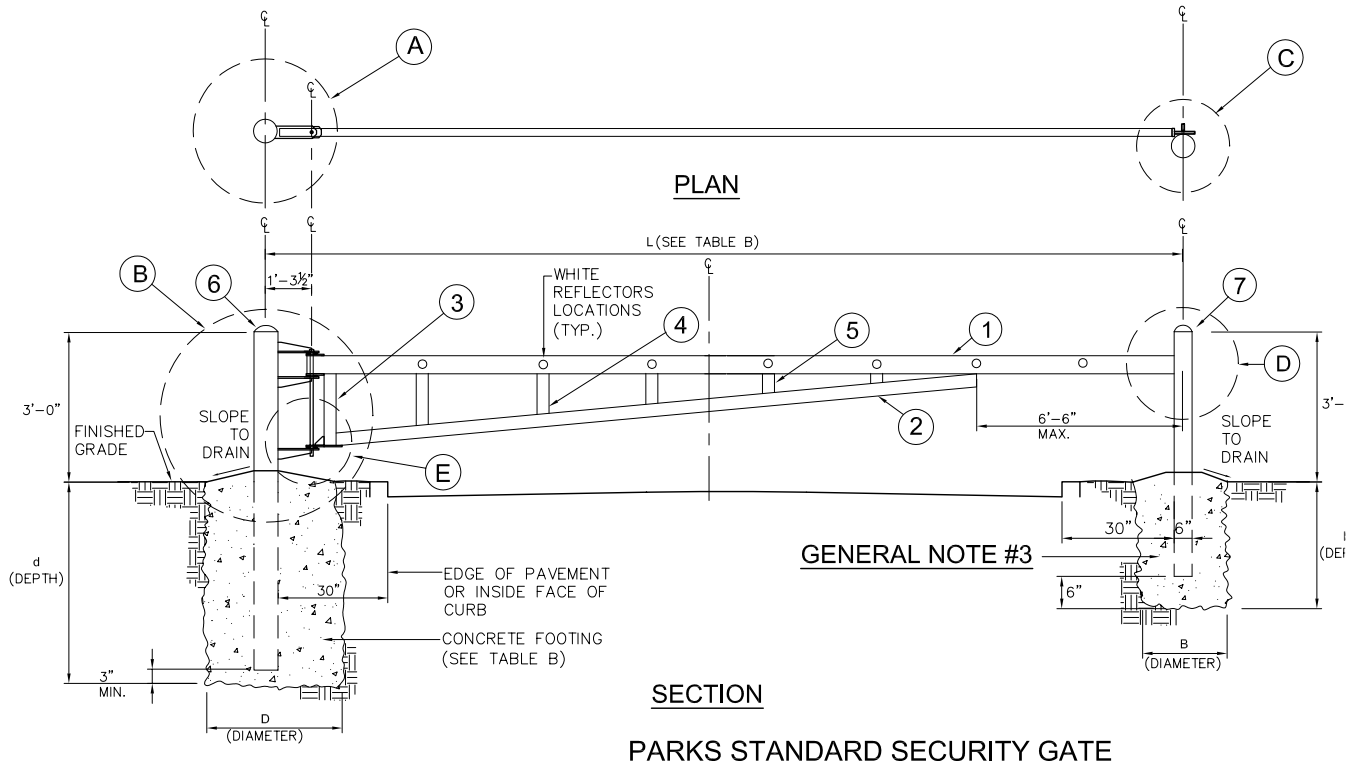

PARKS STANDARD SECURITY GATE

N.T.S.

TABLE A

DETAIL MARK	QTY.	DESCRIPTION	DIMENSIONS
1	2	REC. STL. TUBE	TS 6 X 2 X 1/4 , A500
2	2	"	TS 4 X 2 X 3/16 , A500
3	1	"	"
4	1	"	"
5	1	"	"
6	2	STEEL TUBE	8" O.D., STD., A53
7	2	"	6" O.D., STD., A36
8	6	PLATE STEEL	3/4" X 5" X 1'-1" , A36
9	6	"	1/2" X 3" X 10" , A36
10	6	"	1/2" x 3" x 3-1/2", A36
11	2	"	1/2" X 3" X 3"
12	4	"	1/2" X 4" X 6" , A36
13	2	"	3/4" X 4" X 12", A36
14	2	BRG. PAD	1/2" X 4"
15	1	PLATE STEEL	1/2" X 6" X 6"
16	2	STEEL PIN ROD	1" X 3'-0", A36

TABLE B

		L (FT.)														
		15'	16'	17'	18'	19'	20'	21'	22'	23'	24'	25'	26'	27'	28'	29'	30'
GRAVEL; OR, SANDY GRAVEL S=400	D	2.0'	2.0'	2.0'	2.0'	2.0'	2.25'	2.25'	2.25'	2.25'	2.25'	2.5'	2.5'	2.5'	2.75'	2.75'
	d	3.25'	3.45'	3.6'	3.8'	4.0'	4.0'	4.35'	4.5'	4.7'	4.85'	5.0'	5.0'	5.1'	5.25'	5.25'	5.35'
	B	2.0'	—	—	—	—	—	—	—	—	—	—	—	—	—	—	►
	b	3.0'	—	—	—	—	—	—	—	—	—	—	—	—	—	—	►
SAND; SILTY SAND; CLAYEY SAND; SILTY GRAVEL; CLAYEY GRAVEL S=300	D	2.5'	2.5'	2.5'	2.5'	2.5'	2.5'	2.5'	2.5'	2.5'	2.75'	3.0'	3.0'	3.0'	3.0'	3.25'	3.5'
	d	3.35'	3.5'	3.7'	3.9'	4.05'	4.25'	4.7'	4.9'	5.0'	5.0'	5.0'	5.2'	5.35'	5.5'	5.5'	5.5'
	B	2.5'	—	—	—	—	—	—	—	—	—	—	—	—	—	—	►
	b	3.0'	—	—	—	—	—	—	—	—	—	—	—	—	—	—	►
CLAY; SANDY CLAY; SILTY CLAY; OR, CLAYEY SILT S=200	D	2.25'	2.25'	2.25'	2.25'	2.25'	2.25'	2.25'	2.25'	2.5'	2.75'	3.0'	3.15'	3.35'	3.6'	3.85'	4.0'
	d	4.15'	4.3'	4.55'	4.75'	5.0'	5.2'	5.75'	6.0'	6.0'	6.0'	6.0'	6.0'	6.0'	6.0'	6.0'	6.15'
	b	2.25'	—	—	—	—	—	—	—	—	—	—	—	—	—	—	►
	B	4.15'	—	—	—	—	—	—	—	—	—	—	—	—	—	—	►

>>>>CAUTION - CALL 811<<<<
UTILITY NOTIFICATION CENTER BEFORE YOU DIG!
WWW.CALLBEFOREYOUDIG.ORG

NOT LESS THAN **2** OR MORE THAN **10** BUSINESS DAYS PRIOR TO COMMENCING EXCAVATION OR DEMOLITION. SECURE THE SERVICES OF A COMMERCIAL UNDERGROUND UTILITIES LOCATOR SERVICE TO IDENTIFY BELOW-GROUND IMPROVEMENTS THAT MAY NOT BE INDICATED ON THE DRAWINGS. ADDITIONALLY, TO REQUEST ON-SITE UNDERGROUND UTILITY SYSTEMS LOCATES, CALL **SPR INSPECTION REQUEST LINE @ (206) 684-7034**. REFER TO SECTIONS 02100 & 02120 OF THE SPECIFICATIONS FOR INSTRUCTIONS ON HOW TO PROCEED.

GENERAL NOTES:

1. CONTRACTOR IS RESPONSIBLE FOR SUPPLY AND FABRICATION OF ALL METAL COMPONENTS FOR GATES, EVEN COMPONENTS NOT LISTED.
2. ALL COMPONENTS SHALL BE HOT DIPPED GALVANIZED AFTER FABRICATION. NO FIELD WELDING SHALL BE ALLOWED.
3. A TOTAL OF TWO POSTS ARE REQUIRED FOR EACH GATE INSTALLATION, ONE FOR IN THE CLOSED POSITION AND ONE FOR IN THE OPEN POSITION (TYPICAL).

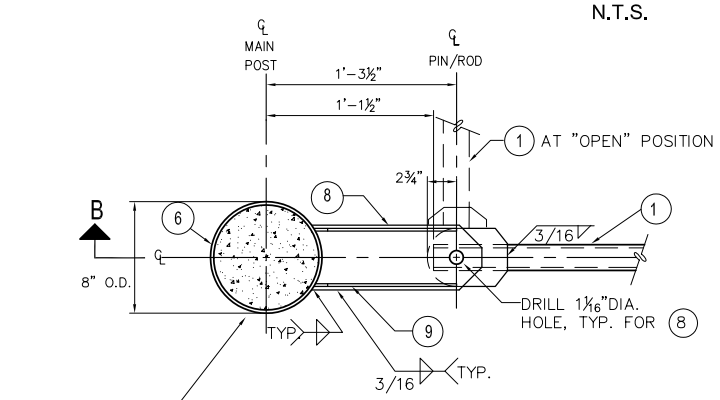

A DETAIL PLAN
N.T.S.

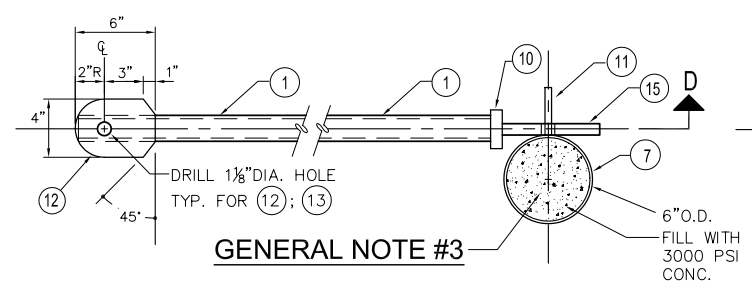

C DETAIL PLAN
N.T.S.

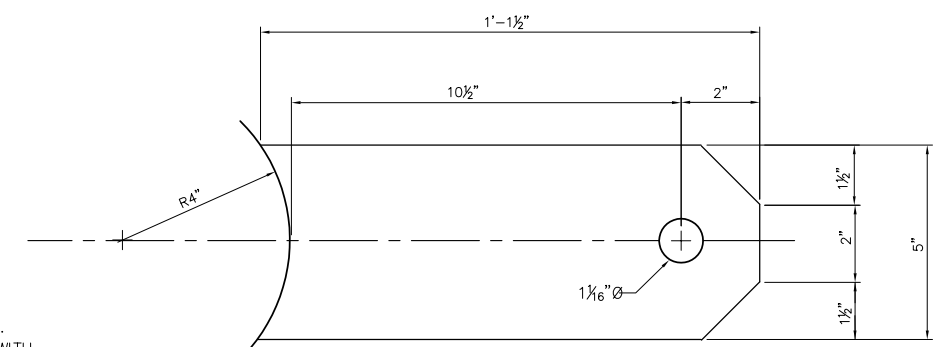

8 PLATE STEEL
N.T.S.

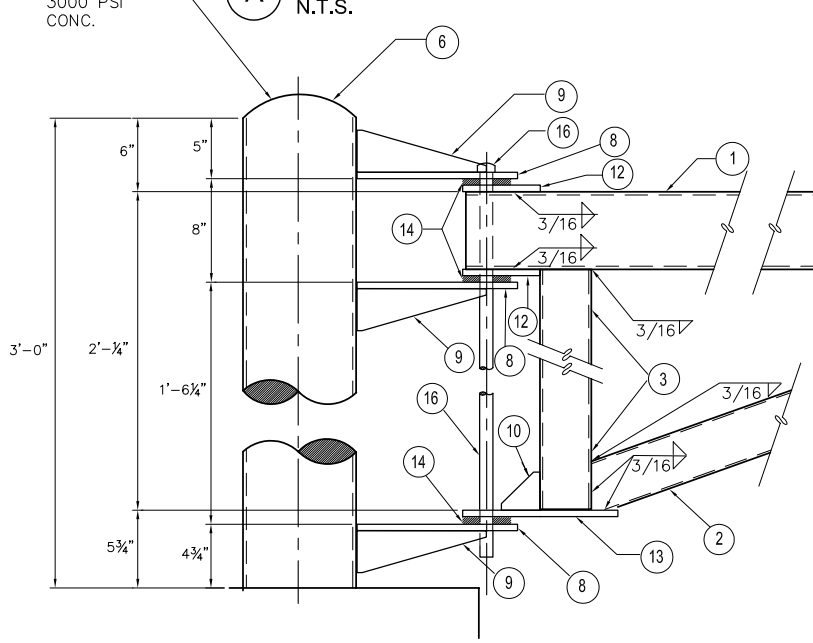

B DETAIL SECTION
N.T.S.

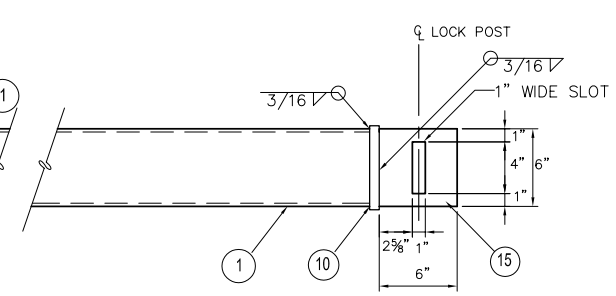

D DETAIL SECTION
N.T.S.

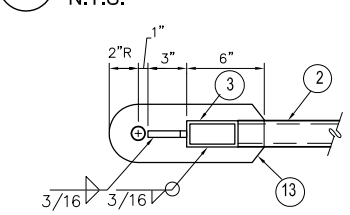

E DETAIL PLAN
N.T.S.

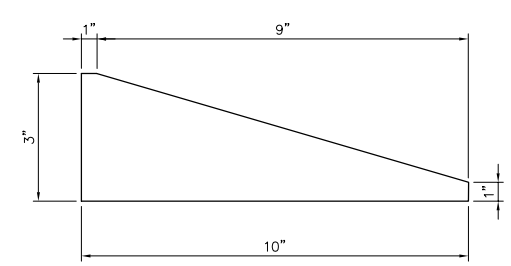

9 PLATE STEEL
N.T.S.

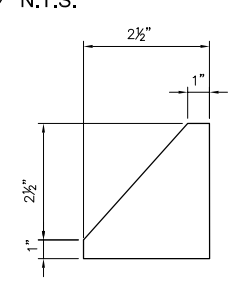

10 PLATE STEEL
N.T.S.

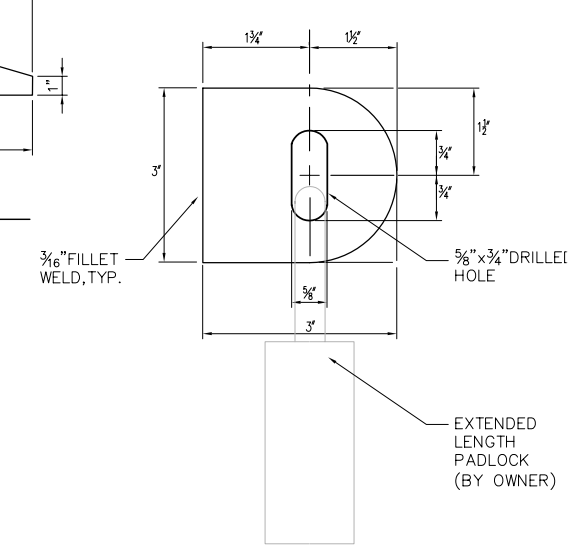

11 PLATE STEEL
N.T.S.

NO.	REVISION – AS BUILT	DATE
3		
2		
1		

REVIEWED: _____ PARK ENGINEER _____ DATE

All work done in accordance with the City of Seattle Standard Plans and Specifications in effect on the date shown above, and supplemented by Special Provisions.

SEATTLE PARKS AND RECREATION

FACILITY NAME

PROJECT NAME

PARKS STANDARD SECURITY GATE DETAILS

DESIGNED CL
DRAWN ET/SJH
CHECKED JN
DATE 9/30/2010
DESIGN REVIEW
ORDINANCE NO.
CONTRACT NO.
SHEET X OF X
SCALE NOT TO SCALE