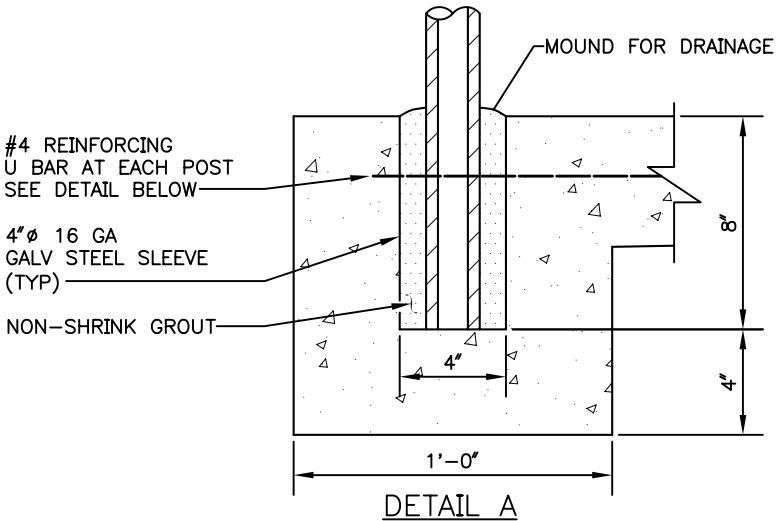

DETAIL A

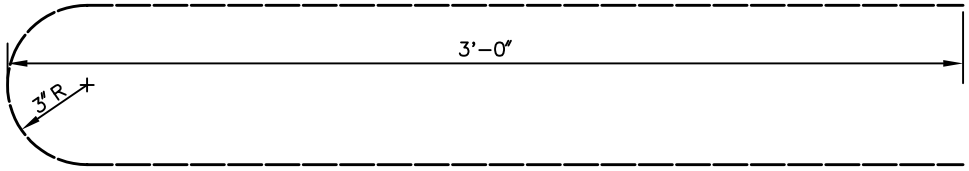

U BAR DETAIL

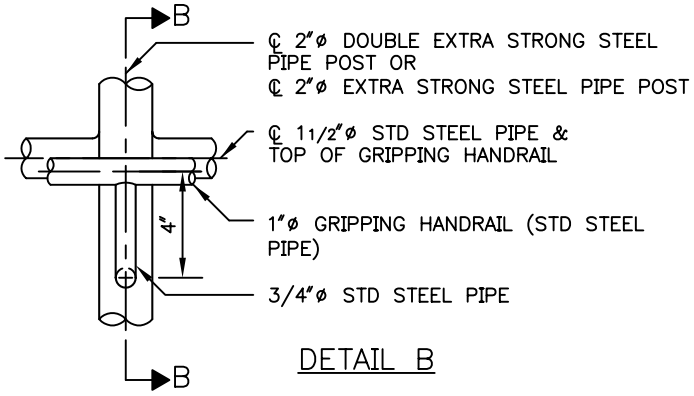

DETAIL B

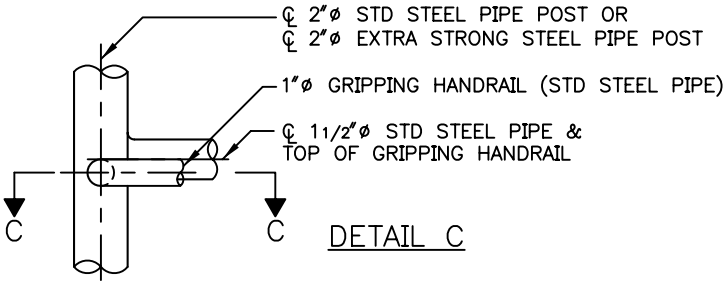

DETAIL C

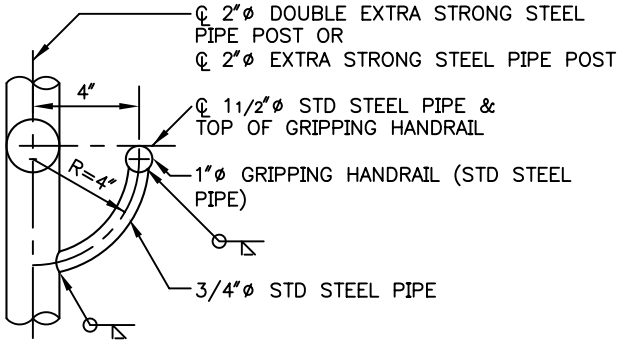

SECTION B-B

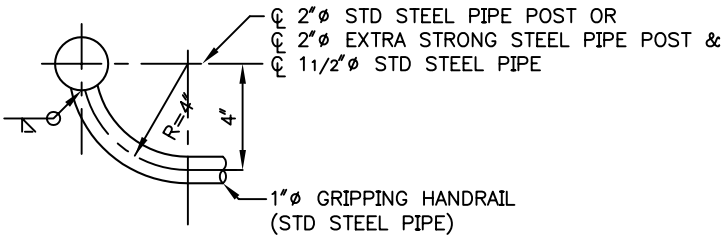

SECTION C-C

City of Seattle Department of Parks & Recreation	**COS METAL PIPE HANDRAIL #443b** **STD. DETAIL NO. 05 52 13.26**