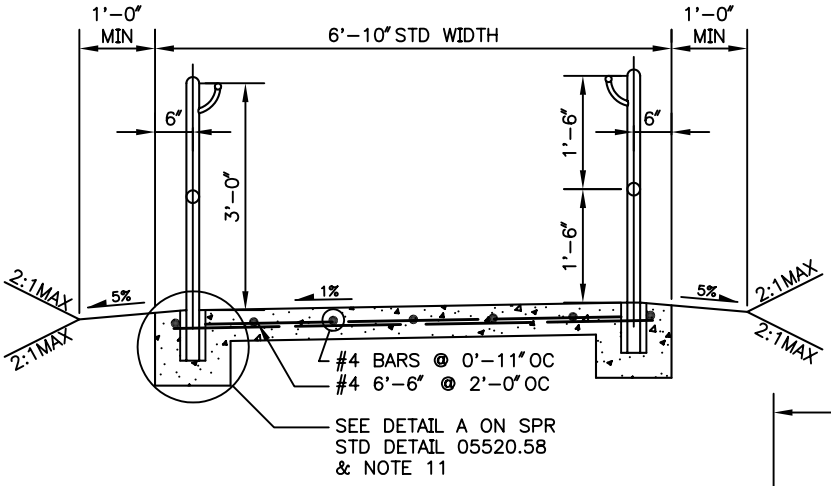

SECTION A–A

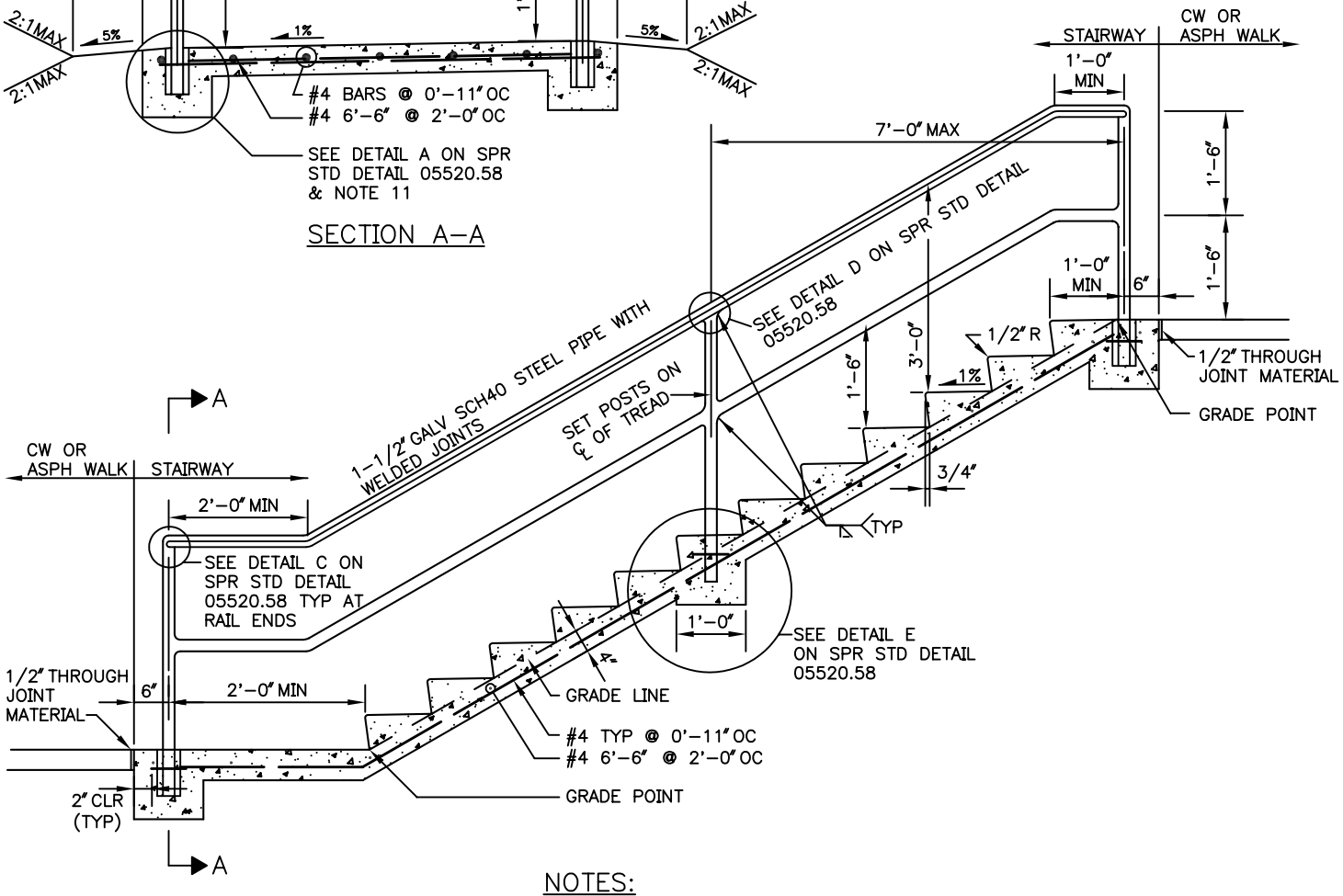

NOTES:

1. FLIGHTS OF STAIRS SHOULD BE SHORT (MAX 20 STEPS PER FLIGHT BEFORE A LANDING IS REQUIRED).
2. AVOID FEWER THAN 2 STEPS PER FLIGHT.
3. STEPS IN FLIGHT MUST HAVE UNIFORM TREAD RUNS AND UNIFORM RISER HEIGHTS WITH TOLERANCE OF ±3/8".
4. TREADS SHALL BE 11" MIN, 12" MAX. RISERS SHALL BE 5" MIN, 7" MAX.
5. LANDINGS BETWEEN FLIGHTS OF STEPS MUST HAVE SAME WIDTH AS STEPS AND A MIN LENGTH OF 4'-0".
6. FLIGHTS OF 4 OR MORE STEPS SHALL HAVE HANDRAILS ON BOTH SIDES
7. HANDRAILS SHALL BE CONTINUOUS ACROSS LANDINGS BETWEEN FLIGHTS OF STEPS.
8. HANDRAILS SHALL BE GALVANIZED AFTER FABRICATION.
9. PIPE MATERIAL SHALL BE ASTM A53.
10. REINFORCING STEEL SHALL BE ASTM A615 GR 60.
11. FOR FORMAL DRAINAGE PICK-UP SEE DETAIL B ON STD PLAN NO. 440b (THIS IS OPTIONAL AND MUST BE CALLED OUT ON DRAWINGS).
12. PIPE DIAMETERS SHOWN ARE "NOMINAL" DIAMETERS AS GIVEN IN AMERICAN INSTITUTE OF STEEL CONSTRUCTION MANUAL.
13. CONCRETE CLASS CL6(3/4).

City of Seattle Department of Parks & Recreation	**COS CONC STAIRS WITH METAL HANDRAILS** **STD. DETAIL NO. 05 52 13.13**