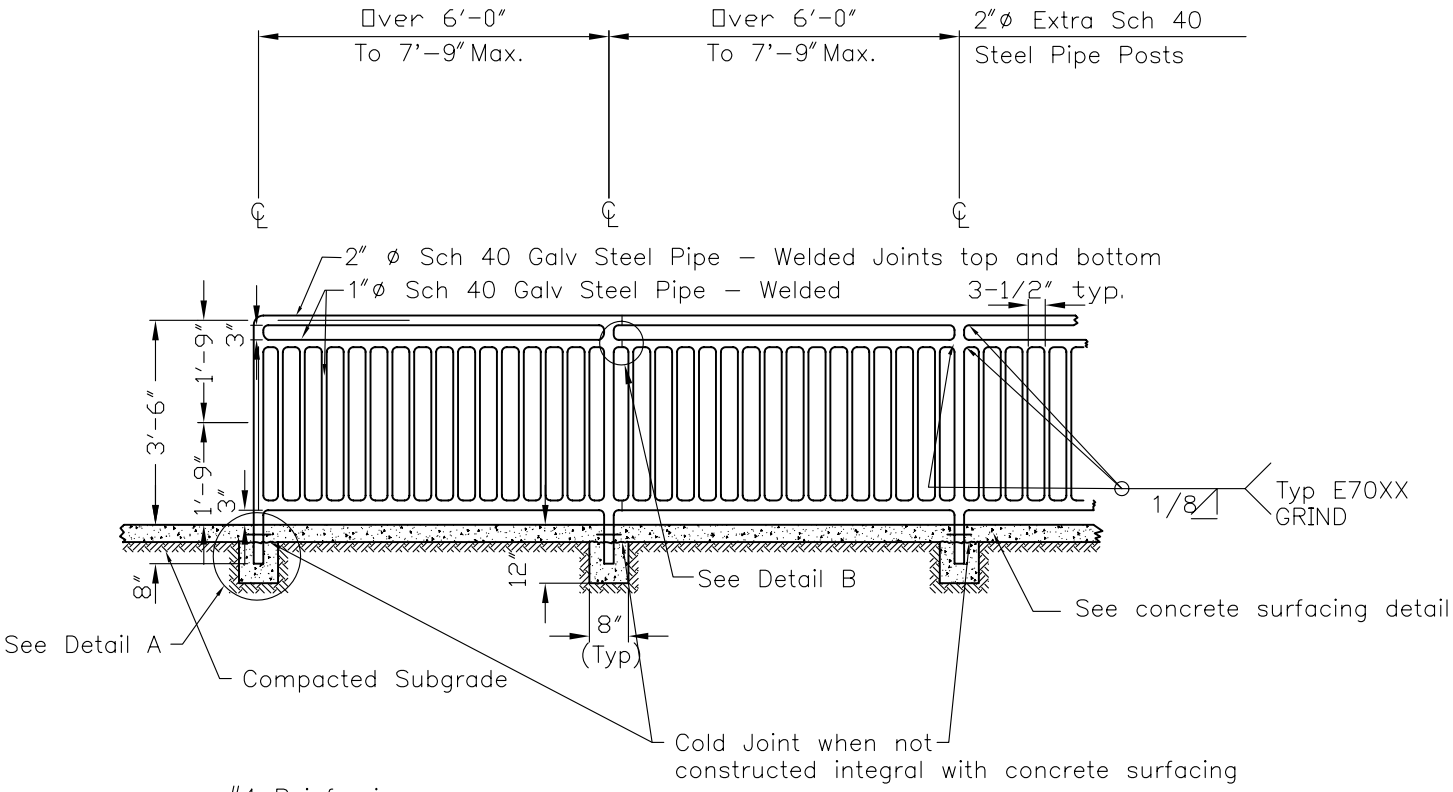

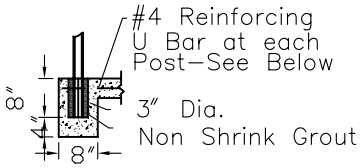

DETAIL A

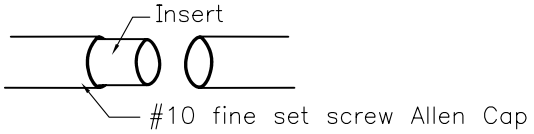

DETAIL B

Notes:

1. Railing shall be Hot Dip Galvanized after Fabrication.
2. All Posts shall be Plumb and Rails Parallel to Grade.
3. Pipe Material shall Conform to ASTM A53 (Sch 40).
4. Reinforcing Steel ASTM A615, Grade 60
5. Provide slip joints at each horizontal member, 50' O.C.

City of Seattle Department of Parks & Recreation	**METAL GUARDRAIL/RAILING DETAILS** **STD. DETAIL NO. 05 52 13.29**