NOTES:
(1.) GRIND WELD JOINT SMOOTH
(2.) HOT DIP GALV.
AFTER FABRICATION

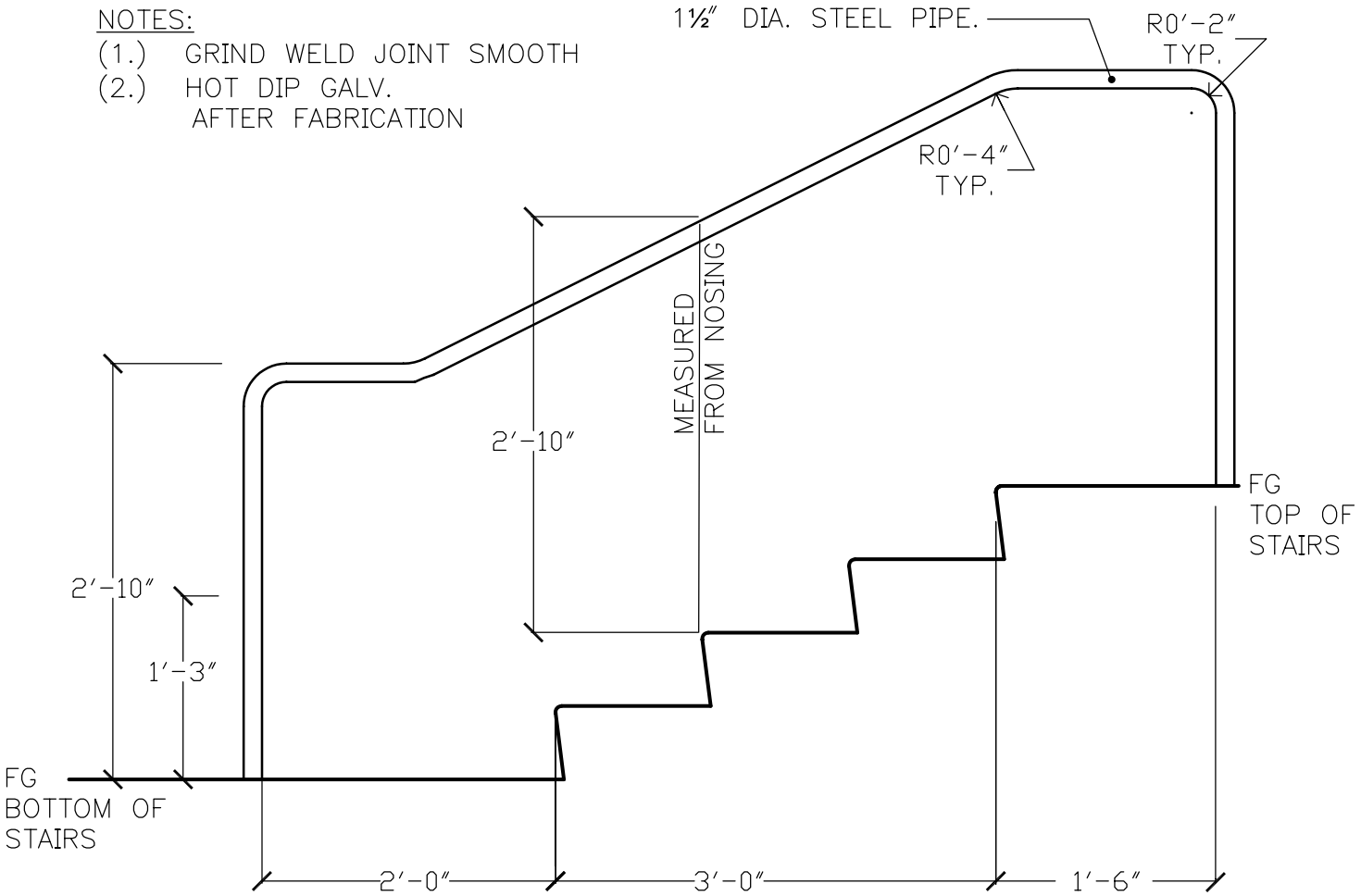

City of Seattle Department of Parks & Recreation	**METAL HANDRAIL DETAIL** **STD. DETAIL NO. 05 52 13.33**