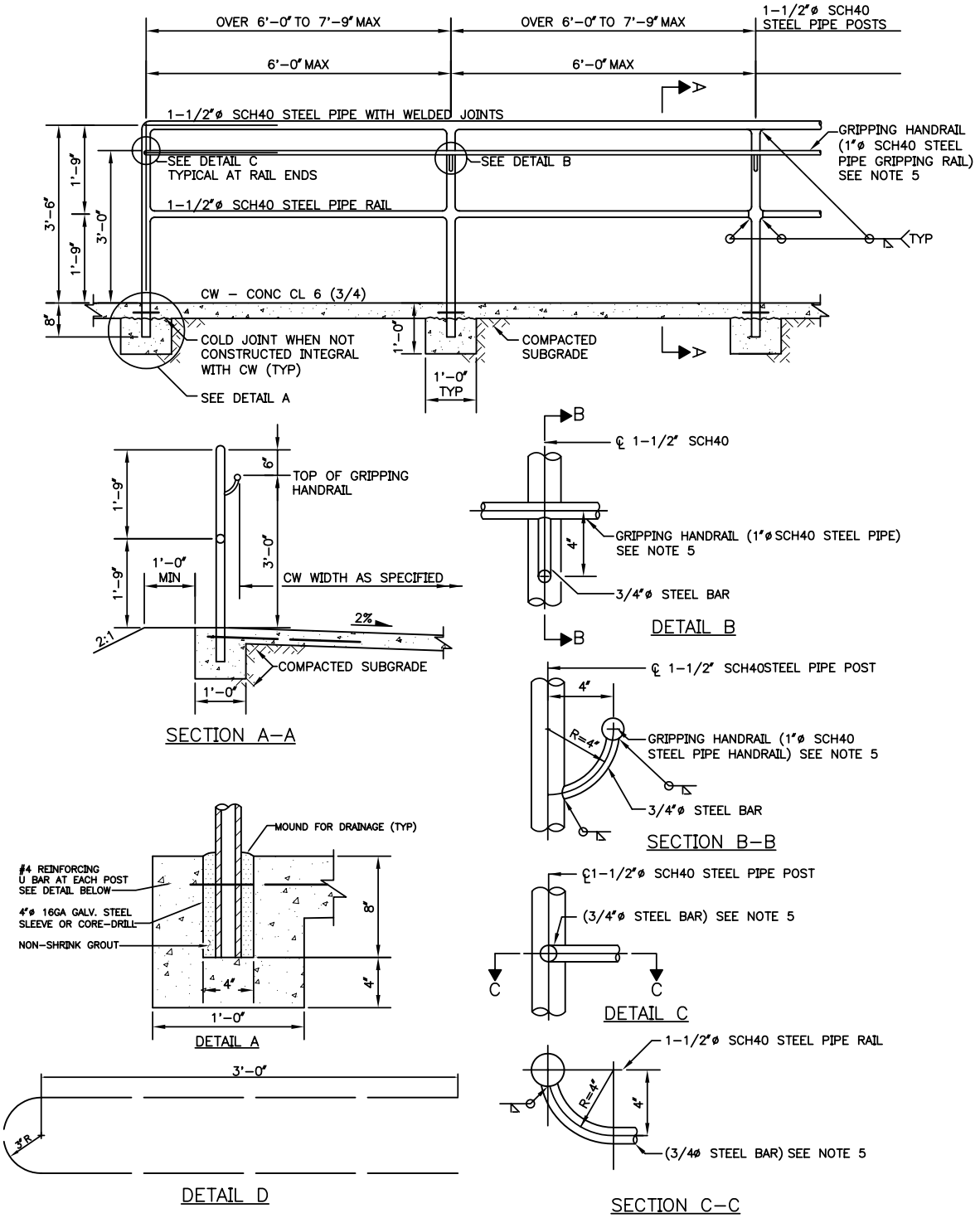

NOTES:

1. RAILING SHALL BE HOT DIP GALVANIZED AFTER FABRICATION.
2. ALL POSTS SHALL BE PLUMB AND RAILS PARALLEL TO THE GROUND.
3. PIPE MATERIAL SHALL CONFORM TO ASTM A 53.
4. REINFORCING STEEL ASTM A 615 GR 60.
5. IF THE CONCRETE WALK SLOPE IS 5% OR GREATER A GRIPPING HANDRAIL IS REQUIRED.
6. PIPE DIAMETERS SHOWN ARE "NOMINAL" DIAMETERS AS GIVEN IN AMERICAN INSTITUTE OF STEEL CONSTRUCTION MANUAL.

City of Seattle Department of Parks & Recreation	**METAL HANDRAIL DETAILS** **STD. DETAIL NO. 05 52 13.19**