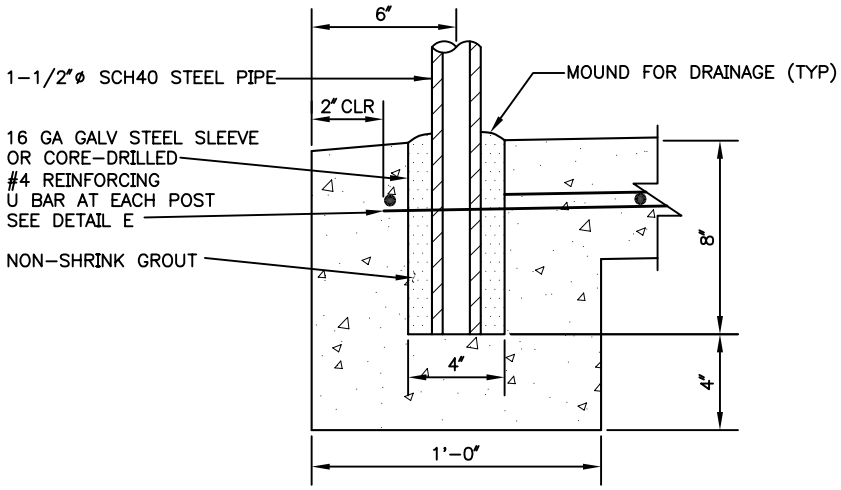

DETAIL A

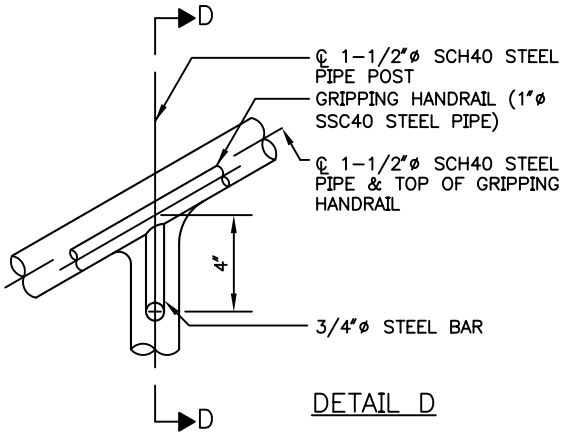

DETAIL D

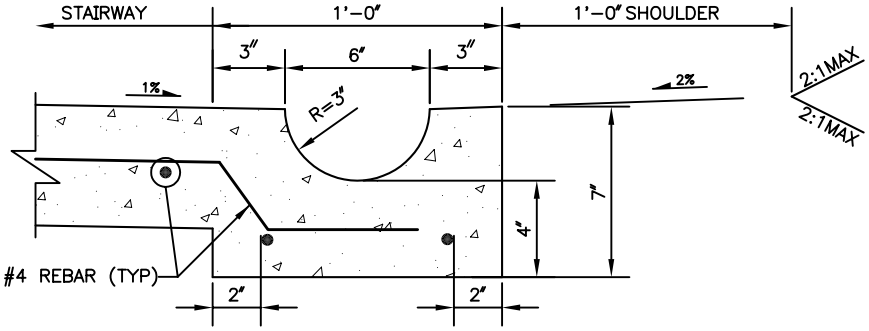

DETAIL B
SEE NOTE 11

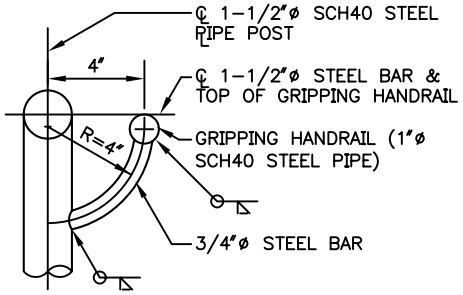

SECTION D-D

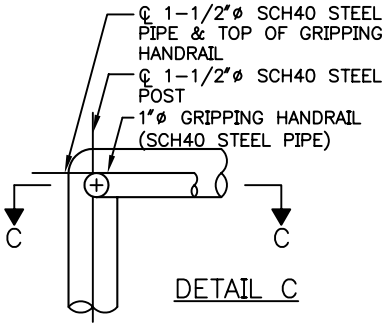

DETAIL C

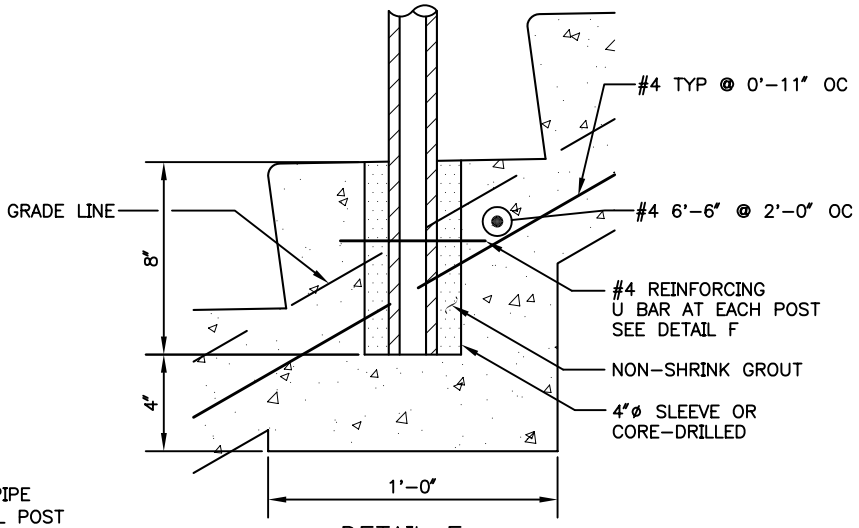

DETAIL E

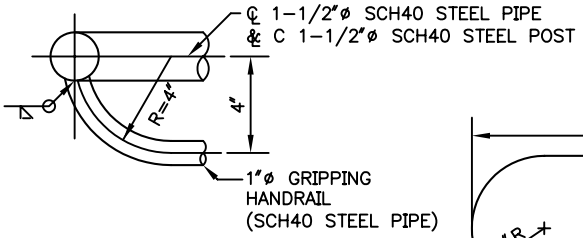

SECTION C-C

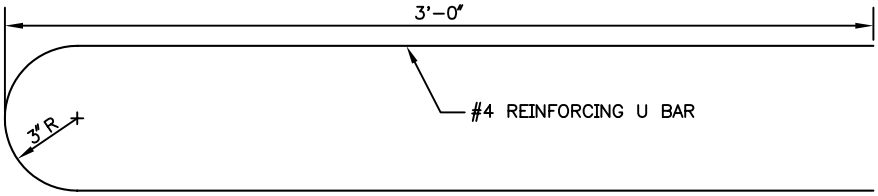

DETAIL F

City of Seattle Department of Parks & Recreation	**METAL HANDRAIL DETAILS** **STD. DETAIL NO. 05 52 13.16**