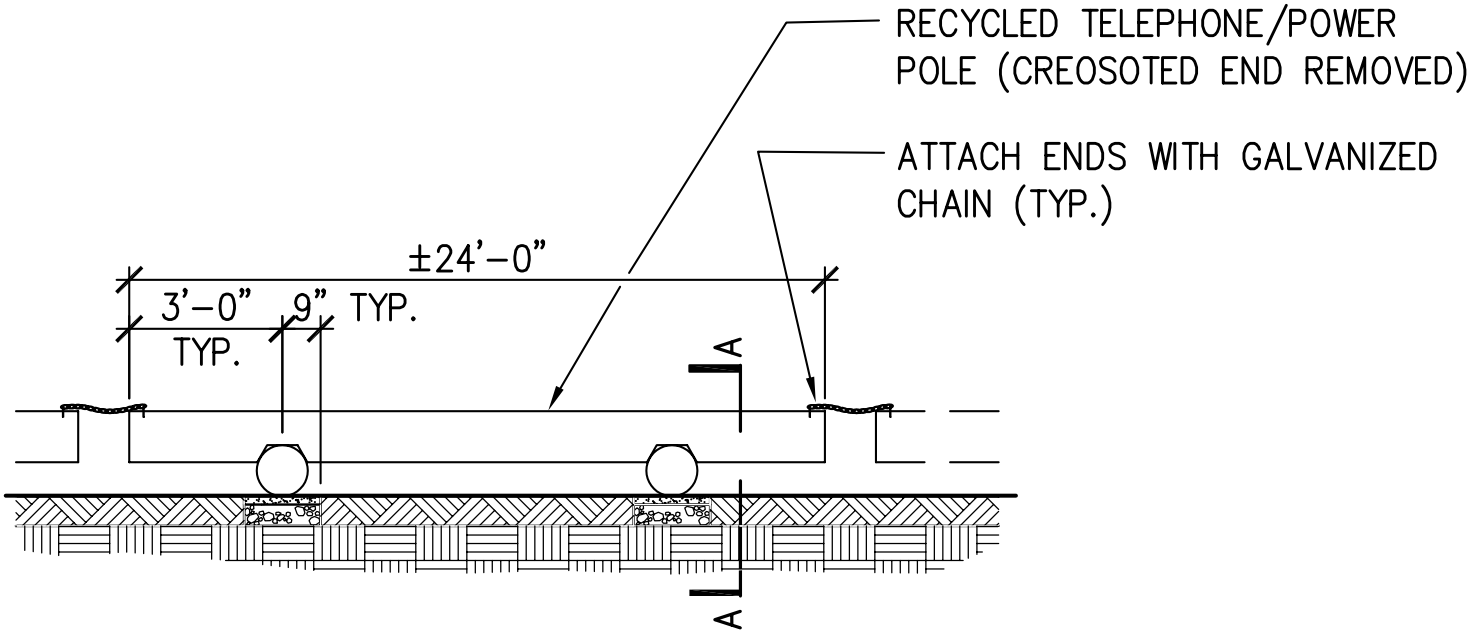

ELEVATION

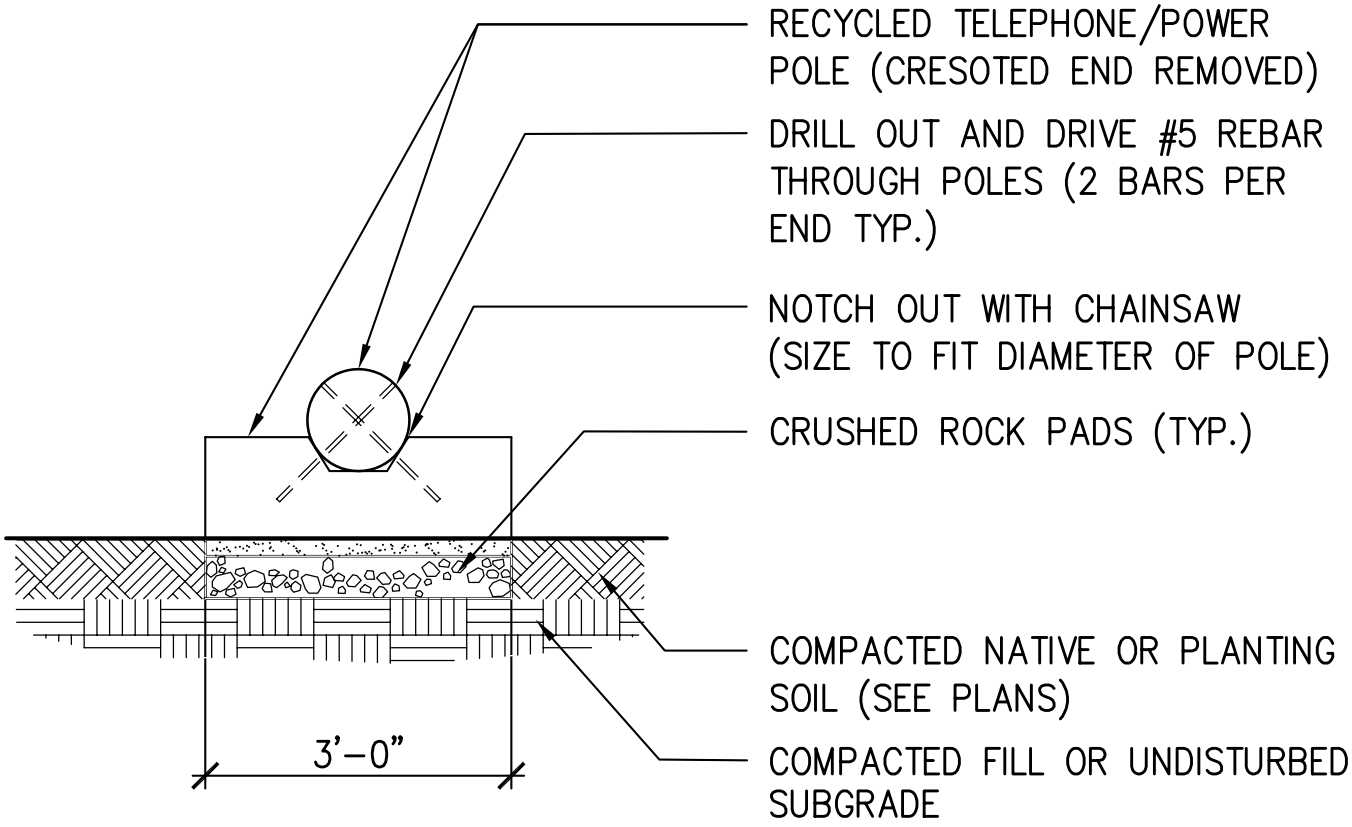

SECTION A-A

City of Seattle Department of Parks & Recreation	**POWER POLE VEHICLE BARRIER DETAIL** **STD. DETAIL NO. 34 71 13**