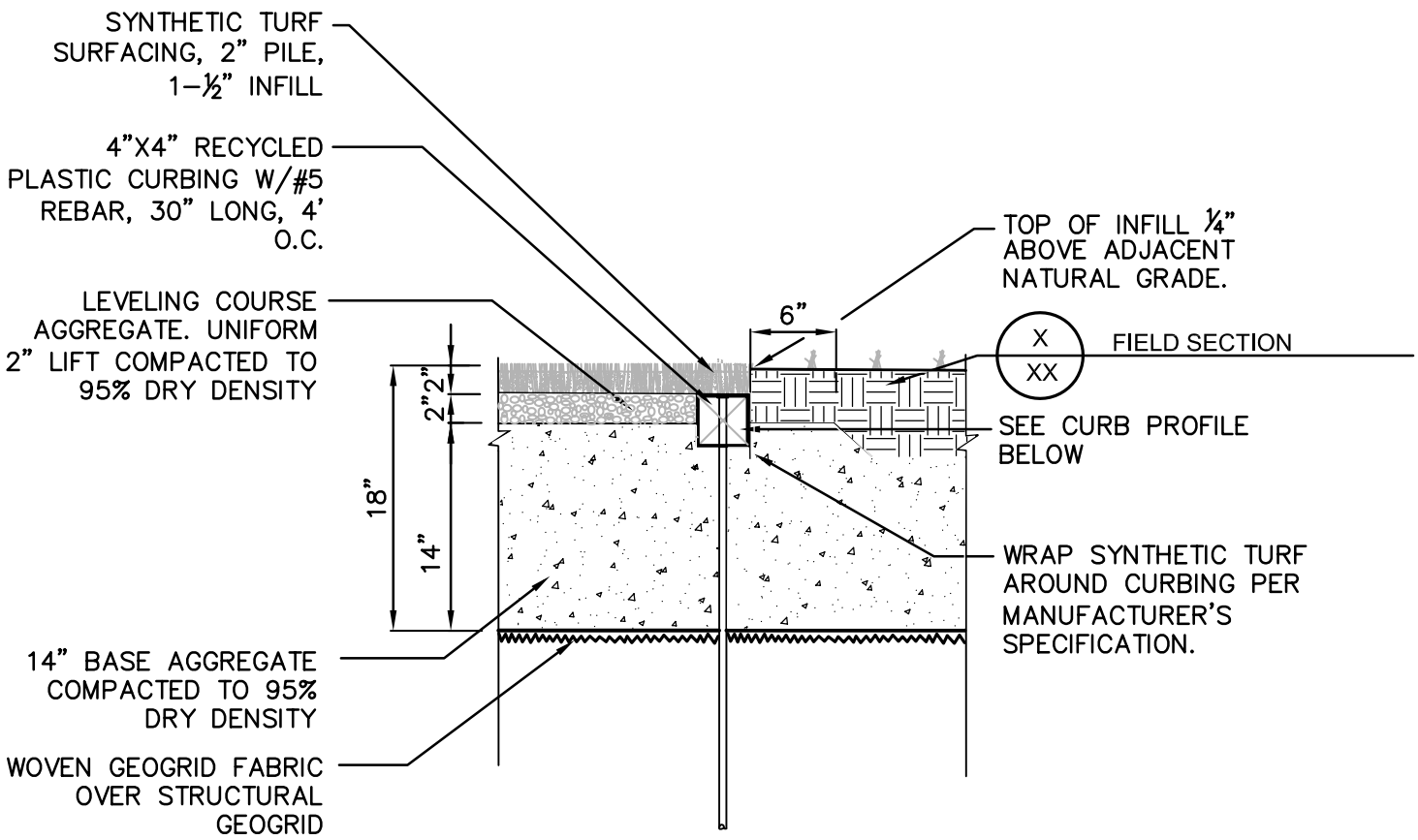

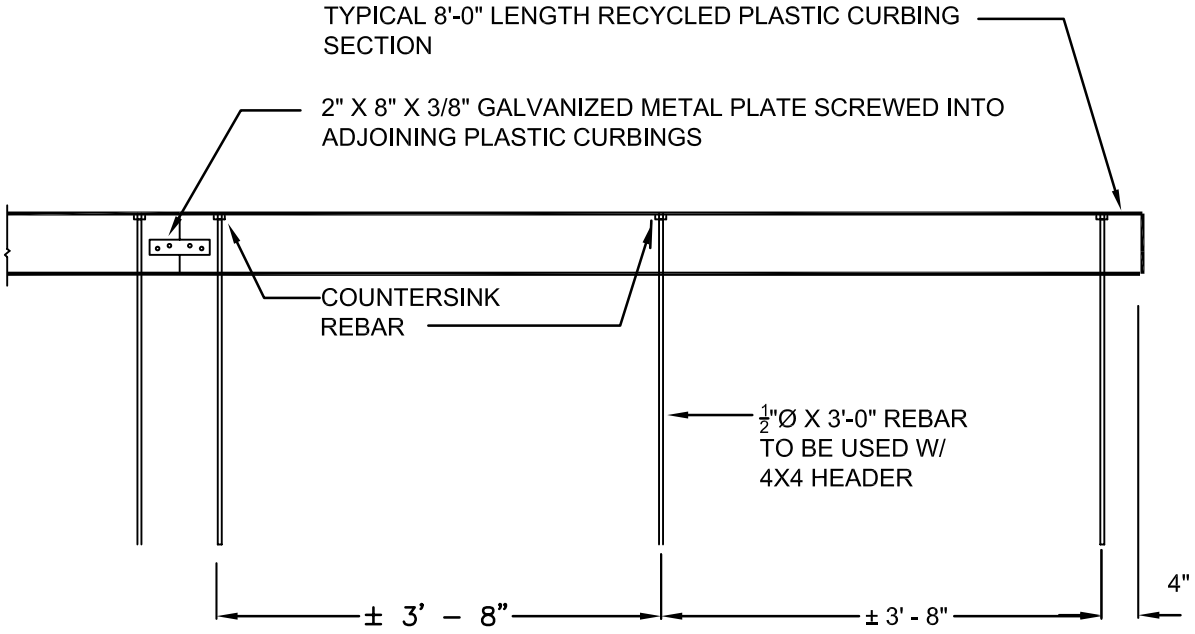

City of Seattle Department of Parks & Recreation	**SYNTHETIC FIELD EDGING DETAIL** **STD. DETAIL NO. 32 18 23.16**