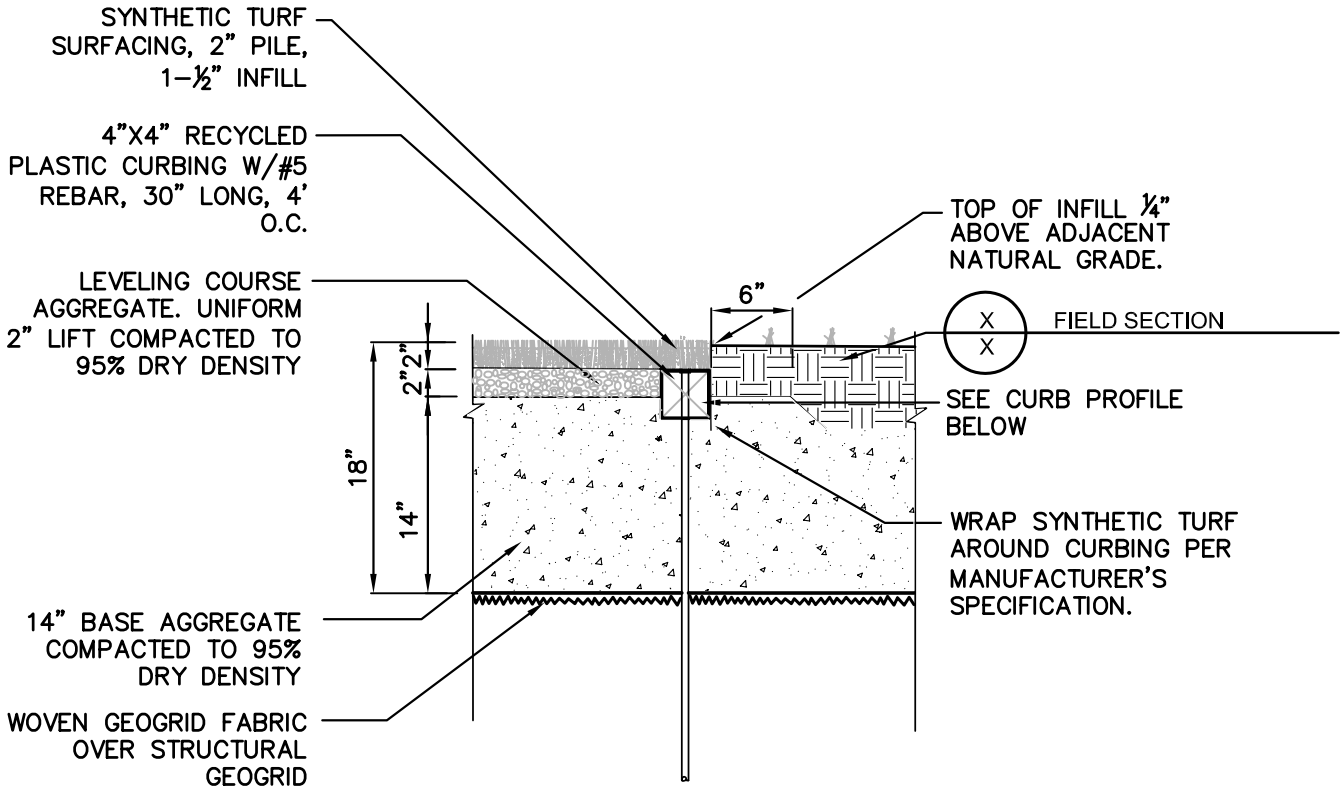

CURB SECTION

NOT TO SCALE

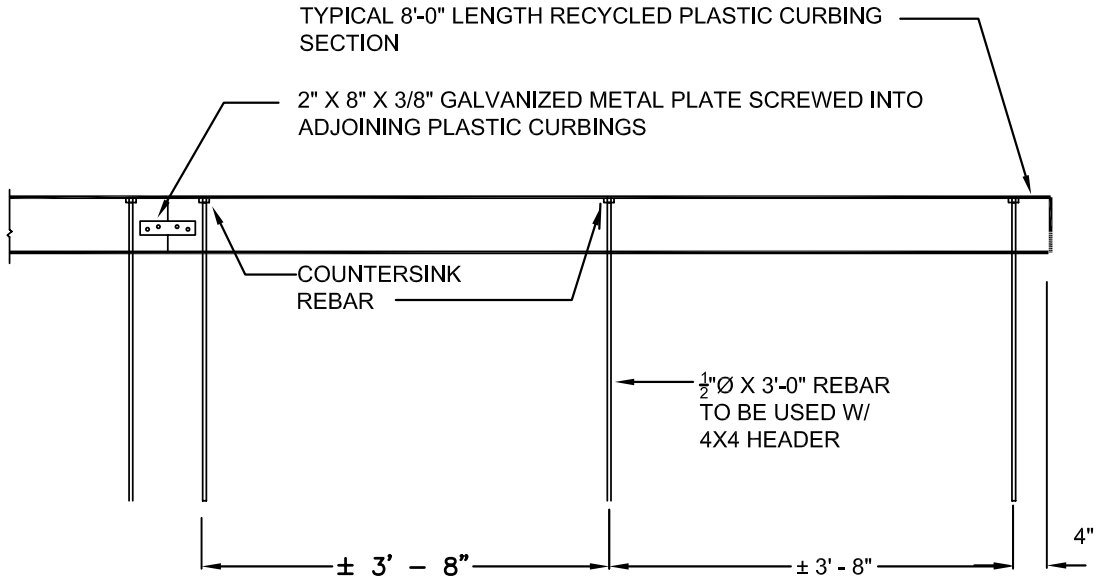

CURB ELEVATION

NOT TO SCALE

City of Seattle Department of Parks & Recreation	**ATHLETIC FIELD SYNTHETIC TURF EDGING DETAILS** **STD. DETAIL NO. 32 18 23.23**