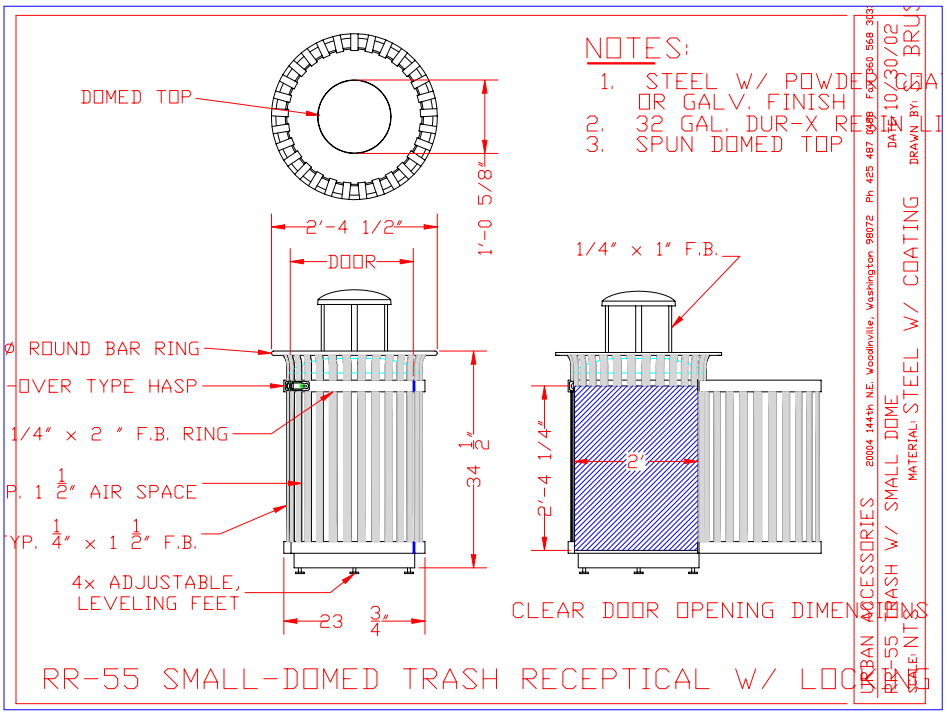
NOTES:
1. STEEL W/ POWDER COA
OR GALV. FINISH
2. 32 GAL. DUR-X REFU
3. SPUN DOMED TOP
DOMED TOP
1'-0 5/8"
2'-4 1/2"
DOOR
Ø. ROUND BAR RING
OVER TYPE HASP
1/4" x 2 " F.B. RING
P. 1 1/2" AIR SPACE
YP. 1/4" x 1 1/2" F.B.
4x ADJUSTABLE,
LEVELING FEET
34 1/2"
23 3/4"
1/4" x 1" F.B.
2'-4 1/4"
2'
CLEAR DOOR OPENING DIMENSIONS
RR-55 SMALL-DOMED TRASH RECEPTICAL W/ LOCKING
URBAN ACCESSORIES
20004 144th NE, Woodinville, Washington 98072 Ph 425 487 0088 Fax 360 568 303
RR-55 TRASH W/ SMALL DOME
MATERIAL: STEEL W/ COATING
SCALE: NTS
DATE: 10/30/02
DRAWN BY: