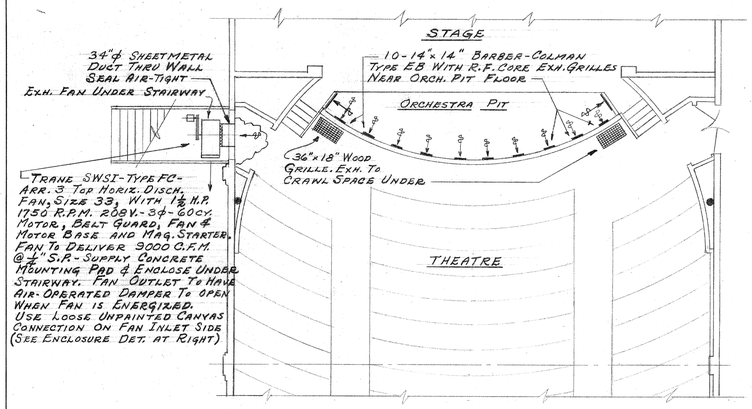

PLAN AT PROSCENIUM

SCALE ~ ⅛" = 1'-0"

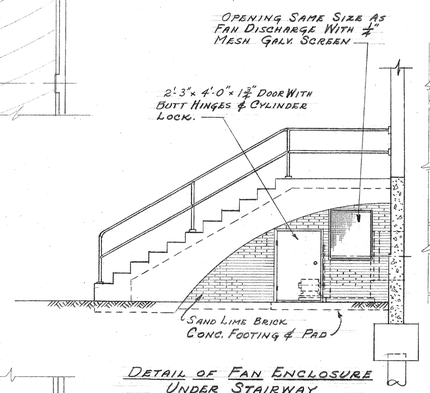

DETAIL OF FAN ENCLOSURE UNDER STAIRWAY

SCALE ~ ¼" = 1'-0"

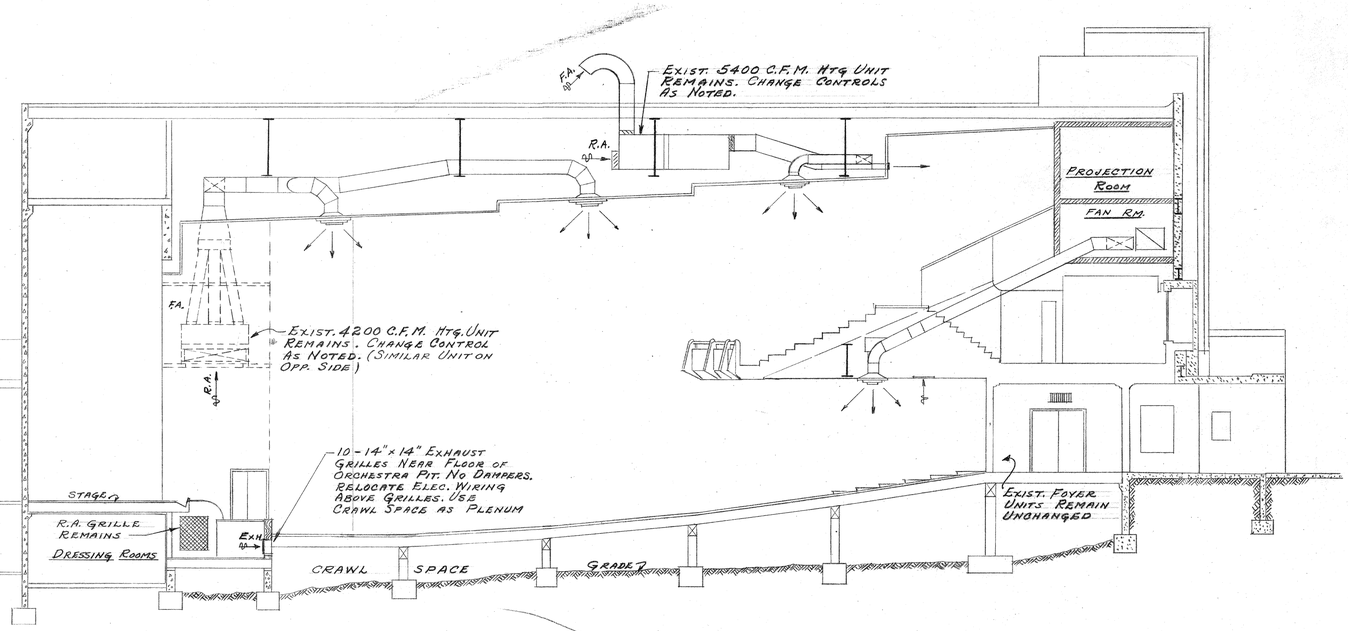

SECTION

SCALE ~ ⅛" = 1'-0"

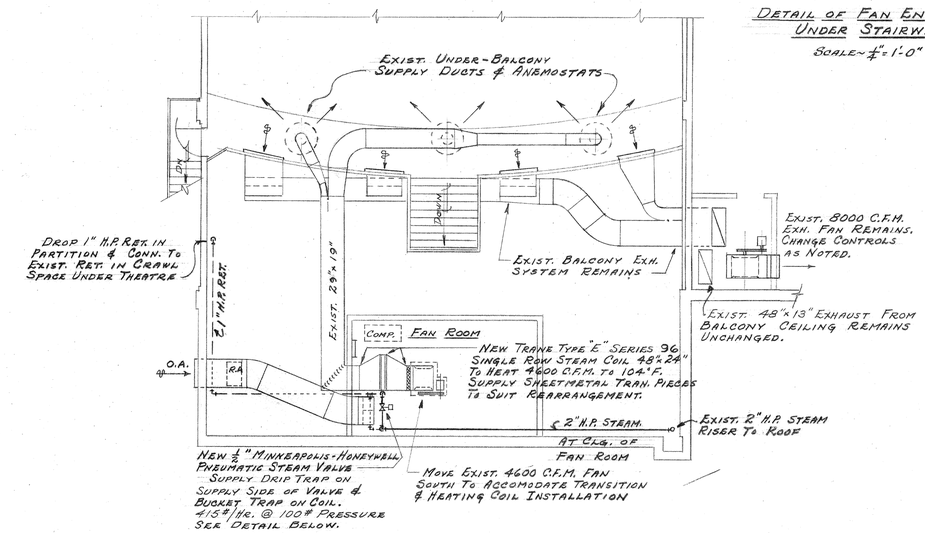

PLAN AT FAN ROOM

SCALE ~ ⅛" = 1'-0"

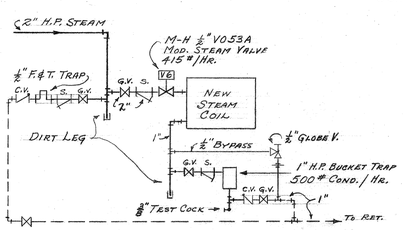

STEAM COIL PIPING DETAILS

No Scale

REQUIRED REVISIONS & ADDITIONS

1- ADD 10 EXHAUST GRILLES NEAR FLOOR OF ORCHESTRA PIT AND 2 GRILLES THRU FLOOR NEAR STAGE STAIRWAYS OPENING INTO CRAWL SPACE UNDER THEATRE FLOOR. CRAWL SPACE WILL ACT AS PLENUM CHAMBER FOR FAN SUCTION

2- ADD 9000 C.F.M @ ½" S.P. FAN UNDER STAIRWAY FROM THEATRE AS SHOWN, WITH SUCTION DUCT THRU CONCRETE WALL INTO CRAWL SPACE PLENUM CHAMBER. ENCLOSE OPEN SIDES OF STAIRWAY TO KEEP OUT UNAUTHORIZED PERSONNEL. MOUNT AIR-OPERATED DAMPER ON FAN DISCHARGE TO CLOSE WHEN FAN IS OFF & OPEN WHEN FAN IS OPERATING.

3.- ADD STEAM COIL TO UNDER-BALCONY VENTILATING SYSTEM. INSTALL COIL & TRANSITION DUCTWORK IN FAN ROOM AS SHOWN, WITH AIR-OPERATED MODULATING STEAM VALVE OPERATING FROM EXISTING HIGH & LOW LIMIT THERMOSTATS UNDER BALCONY.

4.- ADD TWO-POSITION PNEUMATIC SWITCH TO CONTROL OUTSIDE & RECIRCULATED AIR DAMPERS ON ALL HEATING UNITS (2 PROSCENIUM, OVER-BALCONY & UNDER-BALCONY UNITS). IN POSITION "ONE", ALL OUTSIDE AIR DAMPERS WILL CLOSE & HEATING UNITS WILL RECIRCULATE ONLY. IN POSITION "TWO", RECIRCULATION DAMPERS WILL CLOSE & HEATING UNITS WILL SUPPLY ONLY HEATED FRESH AIR & EXHAUST FANS WILL START. IN POSITION "TWO", THE SYSTEM WILL SUPPLY 18,400 C.F.M. FRESH AIR & EXHAUST 15,000 C.F.M., THUS KEEPING BUILDING UNDER PRESSURE. IN POSITION "ONE", ALL UNITS, INCLUDING THE TWO FOYER HEATERS, WILL RECIRCULATE 22,000 C.F.M.

OPERATING INSTRUCTIONS

1- WARM-UP & EMPTY THEATRE CONDITION — START ALL THEATRE HEATING UNITS WITH SWITCH "S-7" IN POSITION "ONE", WHICH WILL CLOSE ALL OUTSIDE-AIR DAMPERS & OPEN ALL RECIRCULATION DAMPERS. THIS WILL PROVIDE 100% RECIRCULATION WITH STEAM COILS CONTROLLED BY THEIR RESPECTIVE THERMOSTATS & DUCTSTATS. ALL EXHAUST FANS WILL BE OFF.

2-CURTAIN-TIME POSITION (ANY SIZE AUDIENCE) - PLACE SWITCH "S-7" IN POSITION "TWO" WITH ALL HEATER UNITS OPERATING. THIS WILL CLOSE ALL RECIRCULATION DAMPERS & OPEN ALL OUTSIDE-AIR DAMPERS ON THE HEATER UNITS, OPEN THE DAMPERS ON THE EXHAUST FANS & START THE EXHAUST FANS AUTOMATICALLY. IN THIS POSITION HEATER UNITS WILL SUPPLY 100% HEATED FRESH AIR & EXHAUST APPROXIMATELY 92%, PLACING THE BUILDING UNDER PRESSURE TO PREVENT INFILTRATION AT DOOR OPENINGS.

3-NO-LOAD CONDITION- IF IT IS DESIRED TO STOP THE HEATER UNITS FOR ANY REASON, THE SWITCH "S-7" SHOULD BE PLACED IN POSITION "ONE" TO PREVENT EXHAUST FANS FROM OPERATING AND COLD OUTSIDE AIR BEING DRAWN INTO THE BUILDING. HOWEVER, IF IT IS DESIRED TO VENTILATE THE BUILDING IN WARM WEATHER, IT CAN BE ACCOMPLISHED BY PLACING SWITCH "S-7" IN POSITION "TWO" WITH THE HEATER UNITS IN "OFF" POSITION. WARNING: NEVER VENTILATE THIS WAY IN COLD WEATHER, AS THE COILS MIGHT FREEZE!

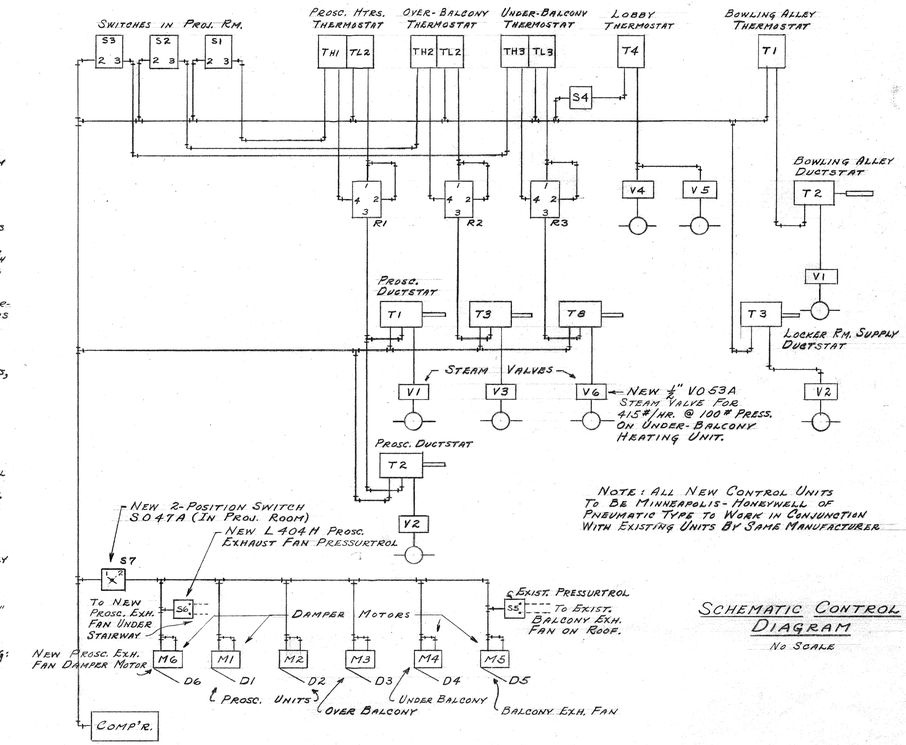

NOTE: ALL NEW CONTROL UNITS TO BE MINNEAPOLIS-HONEYWELL OF PNEUMATIC TYPE TO WORK IN CONJUNCTION WITH EXISTING UNITS BY SAME MANUFACTURER

SCHEMATIC CONTROL DIAGRAM

No Scale

REVISION OF THEATRE VENTILATION SYSTEM

NOTES:

B. Thor Bjornstad

DATE	REVISION	BY	CHKD. BY	DATE	REVISION	BY	CHKD. BY

THE AUSTIN COMPANY
ENGINEERS AND BUILDERS
SEATTLE

DRAWN BY PRIDE DATE 7-6-50 CHECKED BY BTB DATE 7-13-50 SCALE ⅛" = 1'-0"

TITLE OF DRAWING: RECREATION BUILDING-THEATRE
NAME OF OWNER: NAVAL AIR STATION
LOCATION OF JOB: SEATTLE, WASHINGTON

CONTRACT NO. S-36D
SHEET NO. M-1

55780

L. & H. CO.-K. & E. PHOENIX CLOTH