Seattle Department of Construction and Inspections

sdci

Tip 108

Seattle Permits

— part of a multi-departmental City of Seattle series on getting a permit

Regulations Governing Child Care Centers

Updated March 7, 2007

PLANNING TO BUILD A CHILD CARE CENTER?

The City of Seattle recognizes the critical importance of quality child care for the well-being of the city's children and their families and encourages the development of child care centers. Child care centers must comply with many regulations intended to ensure a safe and wholesome environment for each child, as well as regulations that protect the character of our streets and neighborhoods. This Tip is intended to assist prospective child care providers with preliminary planning for their centers, to provide a simplified overview of the most significant regulations, and to provide references to the detailed code documents themselves.

The information in this document is current as of March 2007. However, the codes, regulations and interpretations described continue to change and evolve. For the most current information, contact your design professional, the Seattle Department of Construction and Inspections (Seattle DCI), and the Washington State Department of Early Learning (DEL).

DEFINITION OF "CHILD CARE CENTER"

The definition of a child care center varies slightly between the different agencies. In general, a child care center is an institution which regularly provides care to a group of children for less than 24 hours per day. This includes programs serving children from 3 months to 5 years of age as well as programs for school-age children. Schools themselves are not classified as child care centers.

Certain types of children's facilities do not fit the definition of "child care center," but may be subject to regulation by certain agencies:

- Educational programs for 2-1/2 to 5-year-old children, where the children are enrolled on a regular basis for less than four hours per day, are considered "preschools." Preschools have identical code requirements as child care centers for the purposes of Seattle building and zoning codes, but do not require licensing by DEL.
- Facilities for the care of children whose parents remain on the premises for purposes other than employment, such as the child care rooms found in grocery stores, health clubs or courthouses, are considered "accessory uses" and are not regulated as child care centers.
- Seasonal "camps" engaged primarily in recreational or educational activities are not regulated as child care centers.
- "Family child day care homes" (a state law term) where 12 or fewer children are cared for in the provider's own home operate under a separate set of state and city regulations.

REQUIRED PERMITS, LICENSES AND APPLICABLE REGULATIONS

- **Master Use Permit:** per the Seattle Land Use Code, which is Title 23 of the Seattle Municipal Code (SMC), and is administered by Seattle DCI. The SMC is available on the City Clerk's website at **http://clerk.ci.seattle.wa.us/~public/code1.htm**.
- **Building Permit:** per the Seattle Building Code (SBC), administered by Seattle DCI. The SBC is based on the International Building Code and Washington State amendments, which includes the Barrier-Free Code and the Energy Code. The SBC is available for online viewing at **www.seattle.gov/dpd/codesrules/codes/building/**.
- **Energy/Mechanical Requirements:** per the Seattle Energy Code (SEC), available online at **www.seattle.gov/dpd/codesrules/codes/energy** and the Seattle Mechanical Code, which is online at **www.seattle.gov/dpd/codesrules/codes/mechanical/**. Both are administered by Seattle DCI.

City of Seattle
Department of Construction and Inspections

700 5th Avenue, Suite 2000
P.O. Box 34019
Seattle, WA 98124-4019
(206) 684-8600

Printed on totally chlorine free paper made with 100% post-consumer fiber

- **Business License:** per the Seattle Department of Licensing and Consumer Affairs, which is online at **www.seattle.gov/rca/licenses/licmain.htm**.
- **Child Care License and Health Advisor:** per DEL, **www.sel.wa.gov/education/training.shtml**.
- **Washington State Fire Marshal Regulations:** distributed by DEL.

GETTING STARTED

If you intend to establish or remodel a child care center, be sure to take the following steps first:

1. Arrange to attend a DEL orientation by calling (206) 760-2479. At the orientation licensers and health advisors from DEL will explain the licensing process. A plan review should then be scheduled with DEL before the design is completed to ensure that the proposed center will comply with the regulations.

Before the center is issued a license, the licenser will inspect the premises indoors and out, and will coordinate similar inspections by the state fire marshal's office and the health advisor. The licenser will also check the play and learning materials and the qualifications of the staff.

Licensers and health advisors exercise some discretion in enforcing the DEL regulations and other standards important to the well being of the children in care. Therefore, elements described herein as "advised" or "recommended" may in some instances be required for your project.

2. Ensure that a child care center will be allowed at the property under consideration, by consulting with the Public Resource Center, located on the 20th floor of Seattle Municipal Tower at 700 Fifth Avenue in downtown Seattle, (206) 684-8467. You may also submit a question via DPD's online "Land Use Q&A Service" at **web6.seattle.gov/dpd/LUQnA/**.

3. Examine requirements for exit pathways, fire separations and other building code issues for a particular building by scheduling a pre-application conference with the our building permit staff by calling the Applicant Services Center at (206) 684-8850.

4. Consider hiring an architect or consultant. Assistance from a design professional experienced in child care facilities is valuable and may in some cases be required. A qualified child care consultant may also provide valuable advice and assistance. While this Tip provides basic information on some of the regulations specific to child care centers, there are literally thousands of additional design and construction requirements that apply. Other child care providers in your area may be able to provide references for experienced architects, landscape architects and child care consultants.

ZONING AND LAND USE REQUIREMENTS

Zoning and land use regulations determine where you are allowed to establish a child care center and what Land Use Code regulations apply. Before leasing a space or investing a great deal of time in planning a new center, it is best to make sure that a child care center will be allowable in your proposed location. Every address in Seattle is located in a particular "zone" that defines what types of facilities are allowed at that address.

To find our what zoning applies to your address, you can visit our Public Resource Center and examine their zoning maps, but it is easiest to call them at (206) 684-8467 and give them the address. (Take care to provide the precise address; street designations such as "South" and "Northeast" are important. Also, some lots may have more than one address.) DPD staff will look up the zone and direct you to the regulations for that zoning classification.

Zones where child care centers are always allowed. Child care centers meeting development standards are almost always allowed outright in multifamily zones, commercial and industrial zones, downtown, and in existing or former public schools. Their location within a building may be restricted in commercial zones with a "pedestrian" designation. (SMC 23.44.006)

However, even if a child care center is allowed outright in a particular zone, an environmental review under the State Environmental Policy Act (SEPA) may still be required if it exceeds certain size thresholds. The thresholds are typically 4000 square feet of new floor area or changed use (12,000 SF in commercial C-1 and C-2, industrial and manufacturing zones) with up to 20 parking spaces. This involves significant design expenses, review time, and permit fees. (SMC 25.05.800 and Seattle DCI's Director's Rule on SEPA thresholds.)

Zones where child care centers are sometimes allowed as a "Conditional Use." A child care center may be allowed as a conditional use in a single-family residential zone. Conditional use approval is also required for child care centers in other zones if they do not meet all of the normal development standards, including off-street parking and loading areas (see below). These locations require that the applicant complete an application and appeals process with

LEGAL DISCLAIMER: *This Tip should not be used as a substitute for codes and regulations. The applicant is responsible for compliance with all code and rule requirements, whether or not described in this Tip.*

Seattle DCI and the neighborhood that may result in certain "conditions" being placed on the use permit, such as limiting the number of children or the hours of operation. The design and application process for conditional use approval can take several months to complete, and involves significant design expenses and permit fees. (SMC 23.44.022 and SMC 23.76.004)

Development bonus for child care centers in downtown zones. Under certain conditions, the city will permit high-rise buildings to increase their total allowable floor area if a child care center is provided within the downtown zones. This is known as a "public benefit feature area bonus." (SMC 23.49.012)

Required distance from other "institutions." If the center is located in a single-family zone and will serve more than 25 children, it must be located 600 feet away from all other "institutions." This is known in the Land Use Code as the "dispersion requirement." It is the applicant's responsibility to determine whether any such institutions are located within this distance. A child care center can be co-located within another institution such as a school or religious facility and in some cases may be considered an "accessory use" for that institution. (SMC 23.44.022 E; SMC 23.84.008)

"Use Permits" and "Occupancy Permits" required. Unless your center will be located in a space that is already permitted as a child care center, a "use permit" will be required to establish this use for the space. You can apply for a use permit before applying for a building permit, we recommend applying for a use permit concurrently with the building permit. A change of occupancy to a child care center may trigger a requirement to upgrade the building for life safety and to resist earthquakes, particularly in an unreinforced masonry building. Energy code improvements may also be required. (SBC 3403.12; SBC Table 3403.12)

Parking and Passenger Loading. Zoning regulations typically require that the child care center provide off-street parking for its staff and off-street loading zones for parents to drop off and pick up children. Normally, one parking space is required for every 10 children or else one for every staff member at peak hours, whichever is greater. In addition, one loading zone space is required for every 20 children. (SMC 23.54.015 Chart C) A substantial amount of space is required for the parking spaces, driveways, landscape areas, and setbacks from property lines. This area cannot be used as play space for the children.

Note: Centers located in downtown zones and commercial zones in urban centers are not required to provide parking or loading spaces. (SMC 23.49.019) Centers located within commercial or mixed-use zones in urban centers are subject to further restrictions regarding curbcuts and the location of parking on the lot. (SMC 23.47.A.032)

Possible use of street for loading zones. The Seattle Department of Transportation (SDOT) is sometimes willing to convert two street parking spaces to "10-Minute Passenger Loading Zone Only" spaces for a child care center. However, this will not be possible on every street, so you will have to ask Seattle Department of Transportation (SDOT) for permission by calling (206) 684-7623. Get SDOT's preliminary approval in writing to show to the land use reviewer at Seattle DCI when you apply for a building permit.

Possible use of street for employee parking. Some on-street parking for employees might be allowed, provided that the center is located in an area that has plenty of available street parking during the workday hours. This exemption would require a zoning variance, plus additional fees. It could take several months, and might not be granted. With a formal parking agreement, it may also be permissible to utilize staff parking spaces in a lot located a block or two away from the child care center. (SMC 23.54.015 Chart C, Note 1; SMC 23.54.025; SMC 23.44.022; SMC 23.45.122)

Barrier-free parking. Almost all parking lots require "barrier-free" parking spaces that require additional access aisle space and a wheelchair accessible pathway to the building entry. The first such space must be "van accessible," which requires an eight-foot wide access aisle next to the parking space. (SBC 1106.1; ANSI 502.3.1; SMC 23.54.030 A)

BUILDING CODE REQUIREMENTS

Following are highlights of some of the most significant Building Code regulations that apply to child care centers:

Occupancy type. A child care center must conform to the requirements for E or I-4 occupancies as defined in Chapter 3 of the Seattle Building Code.* (SBC Section 305.2; 308.5.2) Construction will require a building permit, an inspection by a building inspector, and a Certificate of Occupancy issued by Seattle DCI approving the number of children allowed in a particular space. To arrange for this, contact a Seattle DCI inspector at (206) 684-8950.

LEGAL DISCLAIMER: *This Tip should not be used as a substitute for codes and regulations. The applicant is responsible for compliance with all code and rule requirements, whether or not described in this Tip.*

**E-Day Care – More than five children 2-1/2 years and older of who no more than five can be less than 2-1/2. I-4 Child Care – More than five children 2-1/2 years old or less.*

Location in the building. The building code generally requires less when centers for small children (less than 2-1/2 years old) to be located on the ground floor, rather than in a basement or on an upper floor (SBC Section 308.5.2 Exception).

Exits. Any room or space with 10 or more occupants (nine children and one caregiver) in an I-4 child care center requires two exits, separated from each other by at least 50 percent of the diagonal measurement of the room (see the Classroom Layout diagram on page 8). One of the exits from each classroom must open directly into a stair, corridor or to the outdoors, while under certain conditions the second exit, if required, may pass through another room on the way to the exit. (SBC 1013.2; SBC Table 1014.1)

For school-age programs E occupancy only (ages 5-12), Seattle DCI allows up to 50 children in a room with only one exit, providing other requirements are met. To determine whether the State Fire Marshal will permit this arrangement for your center, contact DEL. Also note that portable buildings—sometimes referred to in regulations as "factory assembled structures"—have unique characteristics that may require additional review by the Department of Labor and Industries (L&I), as well as a review of site access and foundations or tie-downs by Seattle DCI. L&I may require two exits even when the portable is used exclusively for school-age programs. (SBC Tables 1004.1.2, 1014.1 and 1018.2)

Corridors and stairways that connect the child care center rooms to the exterior usually must be separated from the rooms with a fire-rated partition and have no dead end longer than 20 feet. Doors and glazing in fire-rated partitions must also be fire-rated and have approved hardware. (SBC 708, 715, Table 1016.1)

If infants or young toddlers (less than 30 months old) are served by the child care center, it is strongly recommended by DEL that the exits be level or ramped such that the children can be evacuated quickly in carts or wheeled cribs. This recommendation may not apply in multistory buildings if certain fire-safety requirements are met and special areas of evacuation assistance are provided.

The Seattle Building Code requires that exit doors allow people to escape the building in case of fire or other emergency, but DEL requires that children be prevented from running out into traffic or other hazardous areas. These dual requirements are sometimes satisfied by providing a fence and gate between the exit door and the street, with a paddle-type latch on the gate and a warning buzzer on the door. (SBC 1001.1)

Fire separation from other occupancies. As E or I-4 occupancies, child care centers must be separated from certain other uses in the same building with fire-resistant walls, floors and ceilings according to Table 302.3.2 in the Seattle Building Code. Business and retail uses, for example, require 2-hour fire rated separations from child care centers, while a storage area requires a 3-hour separation. (A stand-alone center in its own building would not be affected by these rules.) Any openings through these separations for doors, windows or ductwork must have rated fire protection as well. Occupancies above and below the child care center must be separated by use of fire-rated floor and ceiling construction. Such occupancy separations often create significantly higher construction costs in existing buildings. (SBC Table 302.3.2)

If the child care center is located near an adjacent property line, additional fire protection may be required for the walls and openings facing that property line. (SBC Tables 602 and 704.8)

Additional fire safety regulations. A child care center requires smoke detectors and fire extinguishers. If the center has more than 50 occupants, including both children and caregivers, a fire alarm system is also required. Plans must be approved with the Fire Department for emergency egress and rescue operations. For centers not located on the ground floor, an automatic fire sprinkler system may be required. Sprinklers may also be required for ground-floor centers, depending on the building size and construction type. (SBC 907.2)

Accessibility. For new construction, almost all areas and amenities in a child care center must be accessible per Washington State's Barrier-Free Code (Chapter 11 of the SBC). In addition, there are many official state interpretations available to clarify certain points in the regulations. These regulations require that children and adults who use wheelchairs, walkers or crutches, as well as people with hearing, vision, or other disabilities, be able to enter and use the entire facility.

For alterations of existing facilities, the altered areas or elements must be made accessible. In addition, the accessible route of travel, entrance, toilet rooms, parking, drinking fountains and public phones serving the altered area must be made accessible. If the

LEGAL DISCLAIMER: *This Tip should not be used as a substitute for codes and regulations. The applicant is responsible for compliance with all code and rule requirements, whether or not described in this Tip.*

cost of making all of those additional improvements is more than 20 percent of the total cost of the basic alteration project, then the provider is required to remove as many accessibility barriers as possible within the 20 percent limit. As an example, in an average-sized project, the provider would likely be required to construct an accessible ramp to bypass a small set of stairs, but would not have to provide an elevator to access a second floor.

REQUIREMENTS OF THE DEPARTMENT OF EARLY LEARNING (DEL)

Minimum Space Requirements Per Child

The absolute minimum usable indoor space requirement is typically 35 square feet (SF) per child. For infants and other small children who use cribs, 50 usable SF per child is required. (These areas are minimums. Best practice would require a minimum of 40 usable SF per child or 60 SF per infant in each classroom.)

The usable space within the classroom is defined as space available exclusively for use of the children during all hours of operation, and does not include toilet rooms, hallways or closets. Other items often excluded include space used for storage cabinets, adult desks, exit doorways, diaper-changing areas and similar functions intended exclusively for adult use. Also excluded from the "usable space" calculation are other rooms such as kitchens, offices, storage rooms, staff rooms and common areas.

As a rule of thumb, the total area required for the child care center will be 70 - 90 SF per child for an efficient layout. Thus, a child care center for 50 children would require at least 3500 - 4500 SF of total area. This total area might be larger if additional spaces such as indoor play rooms are included in the program. (Washington Administrative Code, or WAC, 170-295-0080)

Outdoor play areas are required to provide an area of at least 75 SF per child so that all children can have significant outdoor time at least twice a day. However, not all of the children in a child care center need to be playing outdoors simultaneously. By scheduling outdoor play in shifts, it may be possible to provide an outdoor play space sized for only half or a third of the children in the center (keeping in mind that daylight hours are short in the winter). (WAC 170-295-2130)

If multi-age groups will use the playground at the same time, then physical divisions of the space are advised in order to maintain the maximum group sizes listed below. The playground equipment for each area must be appropriate for the ages of the children using it. The playground must be fenced. If the entire playground is within 50 feet of a building, the playground requires two exits, each operable with an approved exit device.

Maximum Number of Children in One Room

The total number of children in any one space is limited in order to control the overall level of noise and distraction experienced by each child and to meet the developmental needs of each child. For infants, the maximum number is eight. For toddlers age 12-29 months, the maximum number is 14, and for preschool children through age 5 the maximum is 20. Programs for school-age children can have up to 30 children per room. Keep in mind that only six occupants (five children plus one caregiver) are allowed in a room with only one exit door, except for school-age programs that have obtained special permission to allow 30 school-age children in a room with only one exit door. See "Exits" section above. (WAC 170-295-2090.)

Required Space for Care Givers

Food preparation. At a minimum, a child care center must have a kitchen area for simple food preparation such as slicing fruit or pouring juice for the children, with nearby dishwashing, refrigeration, hand-washing and food storage areas. There must be adequate space for food storage, dishwashing, refrigeration and food preparation. Residential-style appliances are acceptable, although the dishwasher must be equipped to reach a temperature that meets current standards. (If the proposed center will prepare full meals for the children, more extensive kitchen facilities may be required.) (WAC 170-295-3220)

A before-and after-school program without built-in food preparation facilities is allowed to provide limited snacks using simply a dedicated food-preparation table and bottled water as the clean water source. Secure clean storage and refrigeration is required.

Janitor's sink. A lockable janitorial space is required, with a janitorial sink, space to store mops, brooms and buckets, and ventilation to the outdoors. In some instances, this can be combined with a laundry room or other service space. (WAC 170-295-5060)

Staff toilet and break rooms. A separate accessible adult toilet room may be required, and is certainly considered "best practice." Toilet rooms for small children usually do not provide enough privacy for adult use. In addition, a staff room where caregivers can set up projects and take breaks is recommended.

Storage. A separate space to store play and teaching equipment, supplies, records, files, mats, cots and bed-

LEGAL DISCLAIMER: *This Tip should not be used as a substitute for codes and regulations. The applicant is responsible for compliance with all code and rule requirements, whether or not described in this Tip.*

ding is required. This does not always require a separate room. (WAC 170-295-5120 and 170-295-5140)

Administrator's office. An office for the program director is highly recommended for work, file storage and conferences with staff, parents and children. If located near the main entry, the office can serve an additional security function.

Plumbing Fixtures and Related Requirements

Child care center regulations require numerous plumbing fixtures, which add significantly to the construction cost. Where drain lines must be cut through a concrete slab, or where they interfere with other spaces below, plumbing costs can be even higher. Clustering several fixtures close together can reduce these costs.

Child toilets. One toilet is required for every 15 children who are older than 18 months (or one per 35 school-age children). Toilets typically should be set at an appropriate height for the children using them or else impervious platforms must be provided in front of the toilets. (WAC 170-295-5100)

Note: Children's toilets are best located so that they are entered directly from the classroom. If the toilet were located elsewhere, a caregiver would have to accompany each child, leaving the classroom short of the required minimum number of caregivers. This would be a serious violation of state child care regulations. Some toddler rooms provide a half-height door or gate at the toilet to provide some privacy for the toddler while still allowing staff to monitor the toilet room.

Mounting heights. Children's fixture mounting heights for toilets and lavatories are based on the federal Access Board's final rule for children's facilities per ADA requirements, and are allowed in Seattle. (ADA, SBC 1109.2 Exception 1.4)

Child lavatories. One lavatory (hand-washing sink) for the children is required adjacent to each toilet. Many providers prefer to locate the lavatory in the classroom just outside of the toilet room, so that hand washing can be monitored by caregivers and so that the lavatory can be used for other hand washing as well. This is specifically allowable under a State Building Code Council Interpretation. The hot water for children's sinks and lavatories must be maintained between 85 and 120 degrees, although the recommended range is 90-110 degrees. (WAC 170-295-5100)

Diaper-changing sinks. Where diaper changing takes place, a dedicated hand-washing sink is required immediately adjacent to the diaper-changing table. The sink must be located so that the caregiver is able to wash his/her hands without leaving the child. A plan review with DEL can help assure that the design maximizes safety and ability to supervise. See the "classroom layout" diagram on page 8. (WAC 170-295-4120)

Infant food and formula preparation sinks. In rooms for infants or young toddlers where bottles of breast milk or formula are prepared, a clean food preparation sink and a refrigerator are required immediately adjacent to the bottle preparation area. The diapering sink may not be used for this purpose. (WAC 170-295-4030, 170-295-4040, and 170-295-4050)

Clean water source. For classrooms that do not have a food preparation sink, a separate "clean water source" is highly recommended for drinking and food preparation. In some cases, this can be an insulated portable jug (such as the type used at construction sites). Drinking fountains and hand-washing sinks are not considered acceptable sources of clean water. Contact DEL for further restrictions on this option.

Arts and crafts sinks. In rooms where messy arts and crafts projects take place (a feature of most child care centers) additional sinks for children and adults are recommended. Food-preparation and diaper-changing sinks cannot be used for such purposes. A separate adult-height sink is recommended to prevent the back strain that would be generated by bending over the child-height sinks.

Laundry. A laundry space with a washer, dryer and folding table is highly recommended, especially for infant and toddler programs, unless all laundry will be sent off-site for washing. If the laundry area opens onto a classroom, it cannot be used while children are in the classroom. The laundry cannot be located in a kitchen or bathroom area. The washer must be capable of sanitizing laundry either through chemical (bleach) or temperature (140-degree water) means. (WAC 170-295-5110)

Kitchen. The kitchen area must typically have a dishwasher and a two-compartment sink (or a three-compartment sink with no dishwasher) for sanitizing reusable utensils. A kitchen hand-washing sink is highly recommended. The dishwasher must be capable of reaching a temperature of at least 140 degrees. (WAC 170-295-3220)

Staff toilet rooms. Separate staff toilets and lavatories may be required by some code officials. It is clearly "best practice" to provide them.

LEGAL DISCLAIMER: *This Tip should not be used as a substitute for codes and regulations. The applicant is responsible for compliance with all code and rule requirements, whether or not described in this Tip.*

Exhaust fans. Mechanical exhaust ventilation is required at the toilet rooms, janitor's closet, stove tops and clothes dryers. It is highly recommended that diaper-changing areas also have exhaust fans.

Electrical requirements. Light bulbs and fluorescent tubes must have shields in children's areas. Options include plastic tubes with end pieces for fluorescent lights and "Teflon" coated light bulbs. Tamper-resistant outlets or blank covers are also required in children's areas. Slide, twist or ground fault circuit interrupter (GFCI) type outlets are not allowed in child-accessible areas.

CHILD CARE CLASSROOM LAYOUT BASICS

The diagrams on the following page illustrate a number of the regulations described in this Tip. Many other layouts are possible.

A. Two exits may be required if there are 10 or more occupants in the room. One of the two exits can pass through an adjacent classroom. (School-age programs in Seattle may be allowed to have 50 children in a room with only one exit.) Almost all doors must be at least 36 inches wide, with an 18-inch clear space on the "pull side."

B. The two exits must be separated from each other by at least 40 percent of the diagonal dimension of the room.

C. Dashed line indicates the area that can be counted as "usable space." Provide a minimum of 35 SF usable space per child, or 50 SF per infant.

D. A storage "cubby" for each child is required, configured so that the children's coats, hats and clothing do not touch.

E. For classrooms where the children take naps, storage space must be provided for mats or cots.

F. Configure the room so that the children can be seen and heard at all times (no hidden alcoves).

G. Treat the room with light colors, good lighting quality and sound-absorbing materials. Provide heating and ventilation as required. Provide tamper-proof electrical outlets and light fixtures with protective shields over the lamps.

H. Maximum number of children in room: Depends on occupancy group (E or I-4). Provide sufficient usable space per child.

I. A classroom is often divided into a carpeted area for floor play and a hard-surface area for tabletop activities. Moisture impervious flooring is required around sinks, counters, food preparation areas, and diapering areas.

J. Natural daylight is strongly recommended.

K. One accessible toilet and sink is required for every 15 children if any of the children use the toilet.

L. A partial-height partition around a toddler toilet stall provides privacy while still allowing adult supervision.

M. For infants and toddlers, a diaper-changing table is required, oriented in an island or peninsula design so that the caregiver faces the room. A sink is required adjacent to the changing table.

N. Arts and crafts sinks at both child and adult heights are essential for most programs, but are not required by regulations.

O. A full-height partition between classrooms is highly recommended and may be required.

P. A food and bottle preparation area is required for infants and young toddlers. Where a diapering area is within eight feet of a food-preparation area, a 24-inch high barrier is required between them.

This Tip was created under the leadership of Project Lift-Off, a community partnership among public agencies and private entities to create an affordable and effective system of early learning and out-of-school-time activities for children and youth, ages birth to 18. Seattle DCI gratefully acknowledges Duane Jonlin of NBBJ and the other members of the Reducing Regulatory Barriers Building Code Work Group for their leadership and insight in this Tip's development.

Access to Information

Links to electronic versions of Seattle DCI **Tips, forms, codes** and Director's Rules are available on the "Tools & Resources" page of our website at **www.seattle.gov/sdci**. Paper copies of these documents are available from our Public Resource Center, located on the 20th floor of Seattle Municipal Tower at 700 Fifth Ave. in downtown Seattle, (206) 684-8467.

LEGAL DISCLAIMER: *This Tip should not be used as a substitute for codes and regulations. The applicant is responsible for compliance with all code and rule requirements, whether or not described in this Tip.*

Child Care Classroom Layout Basics

These diagrams illustrate a number of the regulations described in this Tip. Many other layouts are possible.

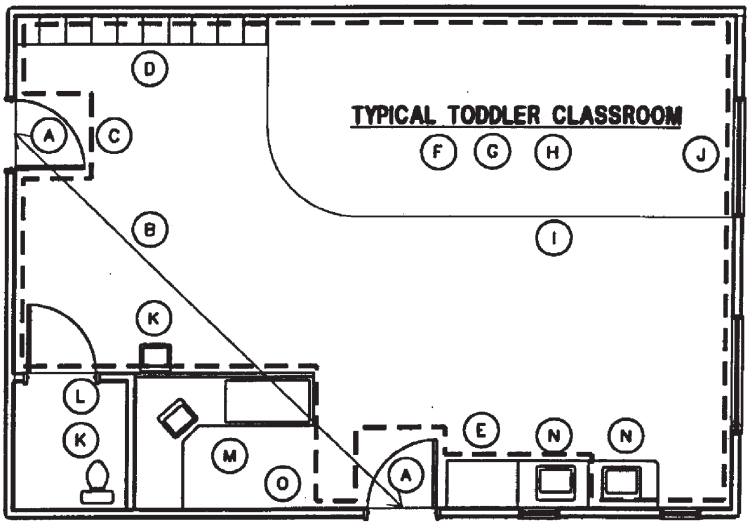

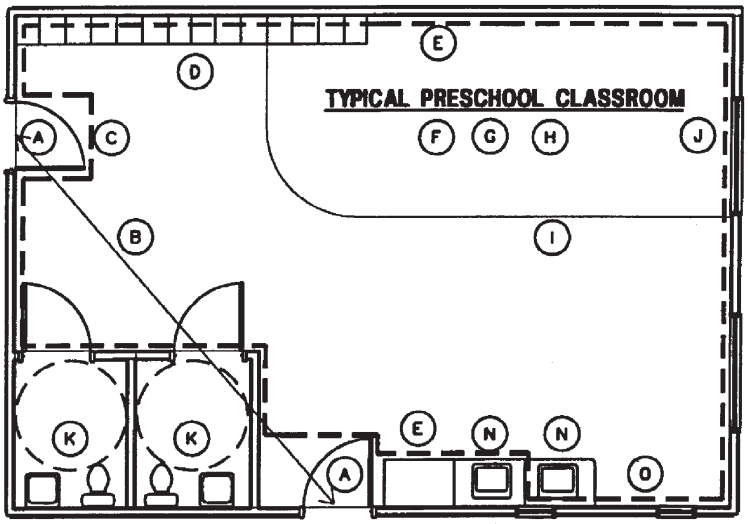

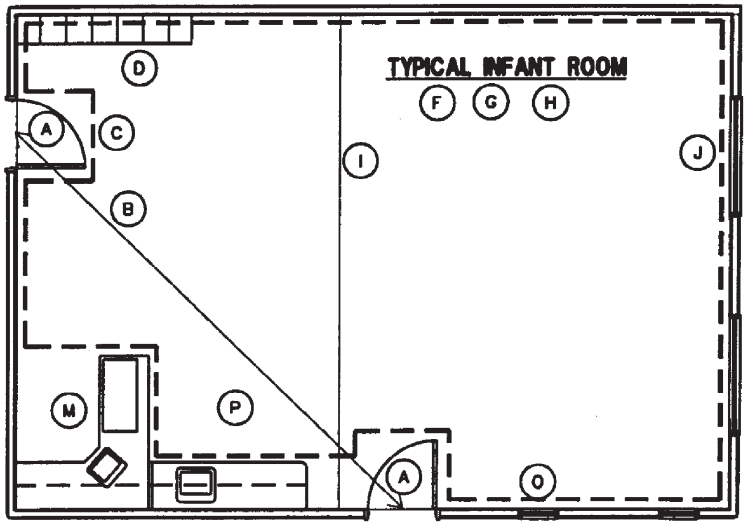

LEGAL DISCLAIMER: *This Tip should not be used as a substitute for codes and regulations. The applicant is responsible for compliance with all code and rule requirements, whether or not described in this Tip.*